Print Number: Print Date:

NOBLELIFT

VNA Reach Truck (man-down type)

OPX15

PARTS MANUAL

221046010101

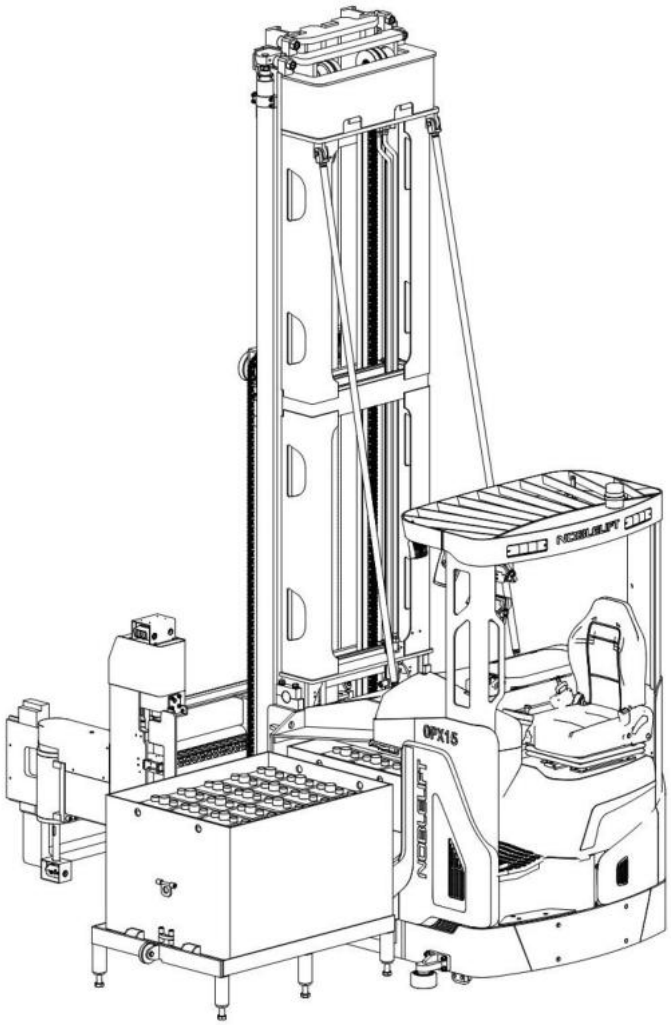

Version V03

Truck Identification Number From:

Parts Manual

OPX15-PM03EN

Please order spare parts from authorized dealers of Noblelift Intelligent Equipment Co., LTD.

In order to avoid wrong delivery, all the orders for spare parts should specify the following items:

- Truck model, identification number and manufacture year.
- Orders for spare parts of mast, hydraulic transmission unit, steering axle, motor, etc. shall indicate the manufacture number of these parts.
- Codes for Noblelift spare parts are shown in the table of parts manual. Please also pay attention to the description of supply status, order quantity, etc. (check the number listed in "Mark" column of the parts manual).

"Mark" Column:

The unmarked indicates the parts are in short supply cycle.

Number 1: supply as package. Indicating these that parts are small parts and seal parts, which are supplied in package unit and in short supply cycle.

Number 2: supply with constraints. Indicating that these spare parts are not in stock and will be prepared for production after receiving the order from customers, which are in long supply cycle.

Number 3: phasing-out supply. Indicating that these parts will be replaced by new parts due to technical improvements and the current stock will not be available when these parts run out. Please check the description of technical improvements notice.

Number 4: supply as assembly. Indicating that these parts are assembly parts defined by manufacture process, which cannot be supplied as a single part.

Number 5: check other tables.

This parts manual is the property of Noblelift and can be shared under the confidential agreement only, Noblelift has the right to claim for compensation of any unauthorized use. Copy without permission is not allowed. Figures in the manual are not limited by the original design. Noblelift Intelligent Equipment Co., LTD reserves the right to improve the products for continuous technology progress.

Table of Contents

Chapter 1: Drive System....5
01 Drive Unit (213346013501)....5
02 Lift Unit (213346032501)....7
Chapter 2: Hydraulic System....9
01 Hydraulic Assembly(221046025001)....9
02 Oil Tank(221046019001)....11
Chapter 3: Truck Frame....13
01 Chassis (221046021501)....13
01 Chassis (221046021501)Continuation1....15
01 Chassis (221046021501)Continuation2....17
02 Overhead Guard(221046022001)....19
03 Platform (213346018001)....21
04 Seat (212146037501)....23
Chapter 4: Mast....25
01 Outer Mast(221046044501)....25
01 Outer Mast(221046044501)Continuation....27
02 Middle Mast(221046044502)....29
02 Middle Mast(221046044502)Continuation....31
03 Inner Mast(221046044503)....33
03 Inner Mast(221046044503)Continuation1....35
03 Inner Mast(221046044503)Continuation2....37
04 Inner carriage (221046038001)....39
05 Side shift carriage (221046038002)....41
05 Side shift carriage (221046038002) Continuation 1....43
05 Side shift carriage (221046038002) Continuation 2....45
Chapter 5: Steering System, Braking System, Wheels....47
01 Steering Wheel(212146031501)....47
01 Steering Wheel(212146031501)Continuation....49
02 Brake Unit (221046011501)....51
03 Brake Pedal(212146011502)....53
04 Load Wheel (221046017001)....55
Chapter 6: Electrical Parts....57
01 Wire Harness (221046033001)....57
02 Controller(221046033002)....59
03 Charger(221046036501)....61
Chapter 7: Special Parts....63
01 Battery Holder (221046012501)....63
02 Monitor (221046036001)....65
03 Height Preselection System (221046066501)....67
Chapter 8: Others....69
01 Control Panel(221046010001)....69

02 Integrated Control Console(212146010002)....71
03 Adjustable Console Support(212146010003)....73
04 Labels and Decals(221046047001)....75
Appendix....77
01 Electrical Circuit Diagram....77
02 Hydraulic Circuit Diagram....78
03 Consumable Parts List....79

Chapter 1: Drive System

01 Drive Unit (213346013501)

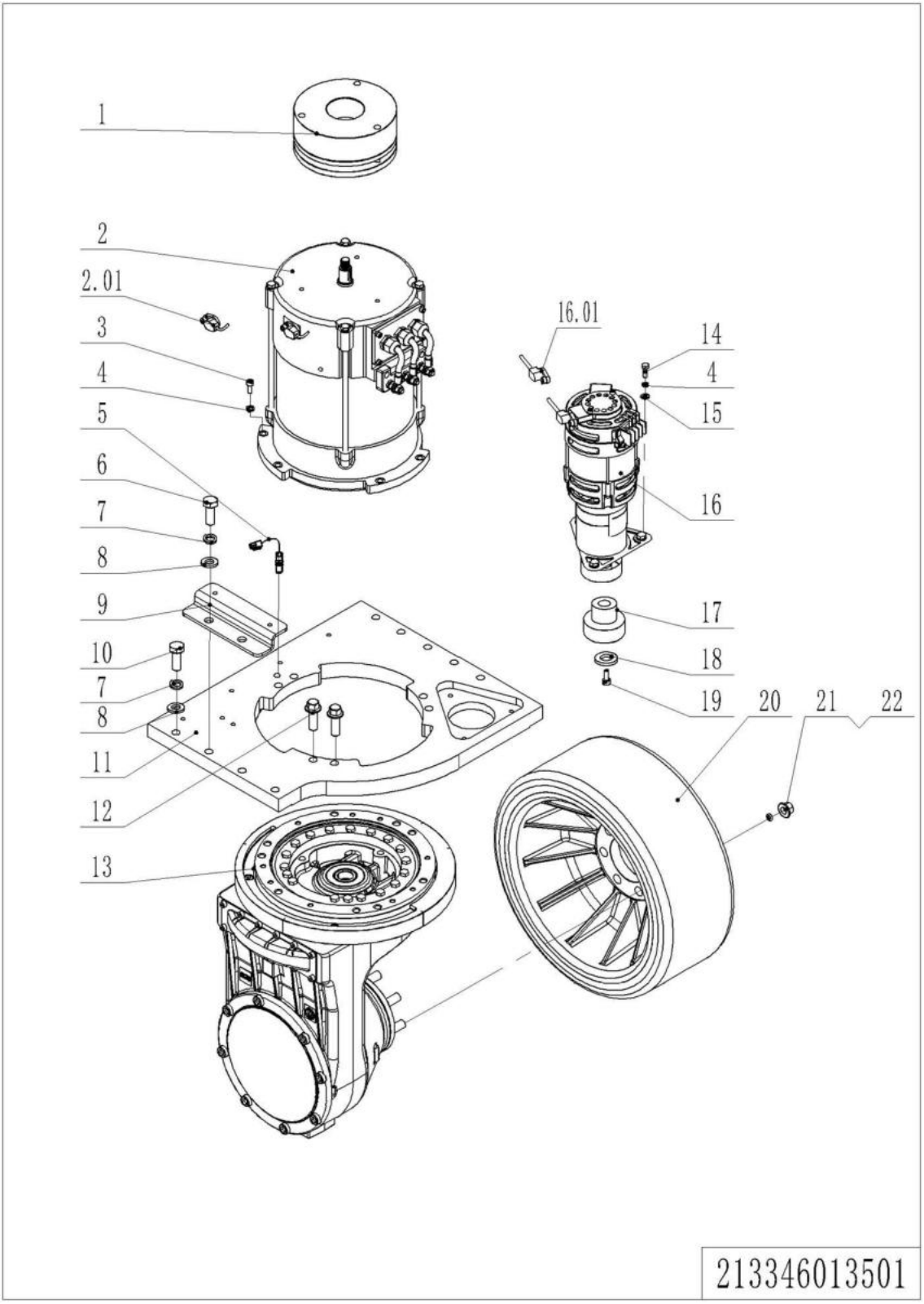

01 Drive Unit(213346013501)

No.	Item Code	Mark	Item Description	Qty.	Substitute	Note
1	940700100003		Brake	1		
2	920900100102		Motor	1		
2.01	921800200037		Encoder	1		
3	910200200061	1	Screw	6		
4	910400500006	1	Spring Washer	10		
5	212133510010		Proximity Switch	1		
6	910100300096	1	Bolt	2		
7	910400500008	1	Spring Washer	8		
8	910400100008	1	Flat Washer	8		
9	213321520042		Fixing Plate	1		
10	910100300095	1	Bolt	7		
11	213321520022		Plate	1		
12	910100800003	1	Bolt	6		
13	941000100008		Gearbox	1		
14	910400100006	1	Flat Washer	3		
15	910100300023	1	Bolt	3		
16	940900800001		Steering Unit	1		
16.01	921800200012		Encoder	1		
17	213313520000		Gear	1		
18	213313520001		Washer	1		
19	910200200058	1	Screw	1		
20	940300400043		WheelΦ400x160	1		
21	940998520072	1	Nut	7		
22	940998520073	1	Spring Washer	7		

02 Lift Unit (213346032501)

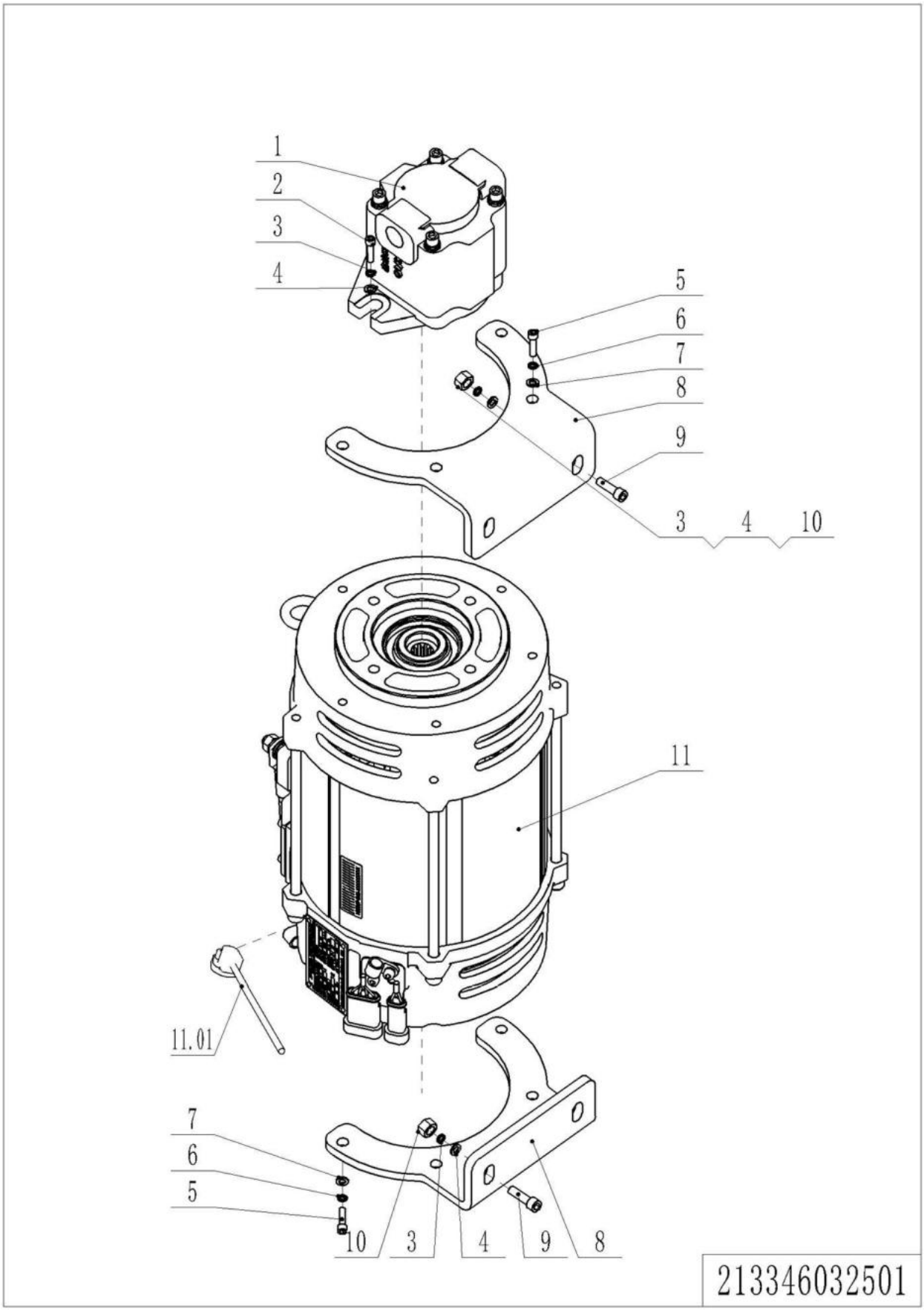

1= Supply as package. 2= Supply with constraints. 3= Phasing-out supply. 4= Supply as assembly. 5= Check other tables.

02 Lift Unit(213346032501)

No.	Item Code	Mark	Item Description	Qty.	Substitute	Note
1	950800200008		Gear Pump	1		
2	910200200077	1	Screw	2		
3	910400500007	1	Spring Washer	6		
4	910400100007	1	Flat Washer	6		
5	910200200057	1	Screw	8		
6	910400500006	1	Spring Washer	8		
7	910400100006	1	Flat Washer	8		
8	212132520000		Mounting Plate	2		
9	910200200079	1	Screw	4		
10	910300100007	1	Nut	4		
11	920900100027		Motor	1		KDS
11	920900100126		Motor	1		
11.01	921800200013		Encoder	1		KDS
11.01	921800200038		Encoder	1		

Chapter 2: Hydraulic System

01 Hydraulic Assembly(221046025001)

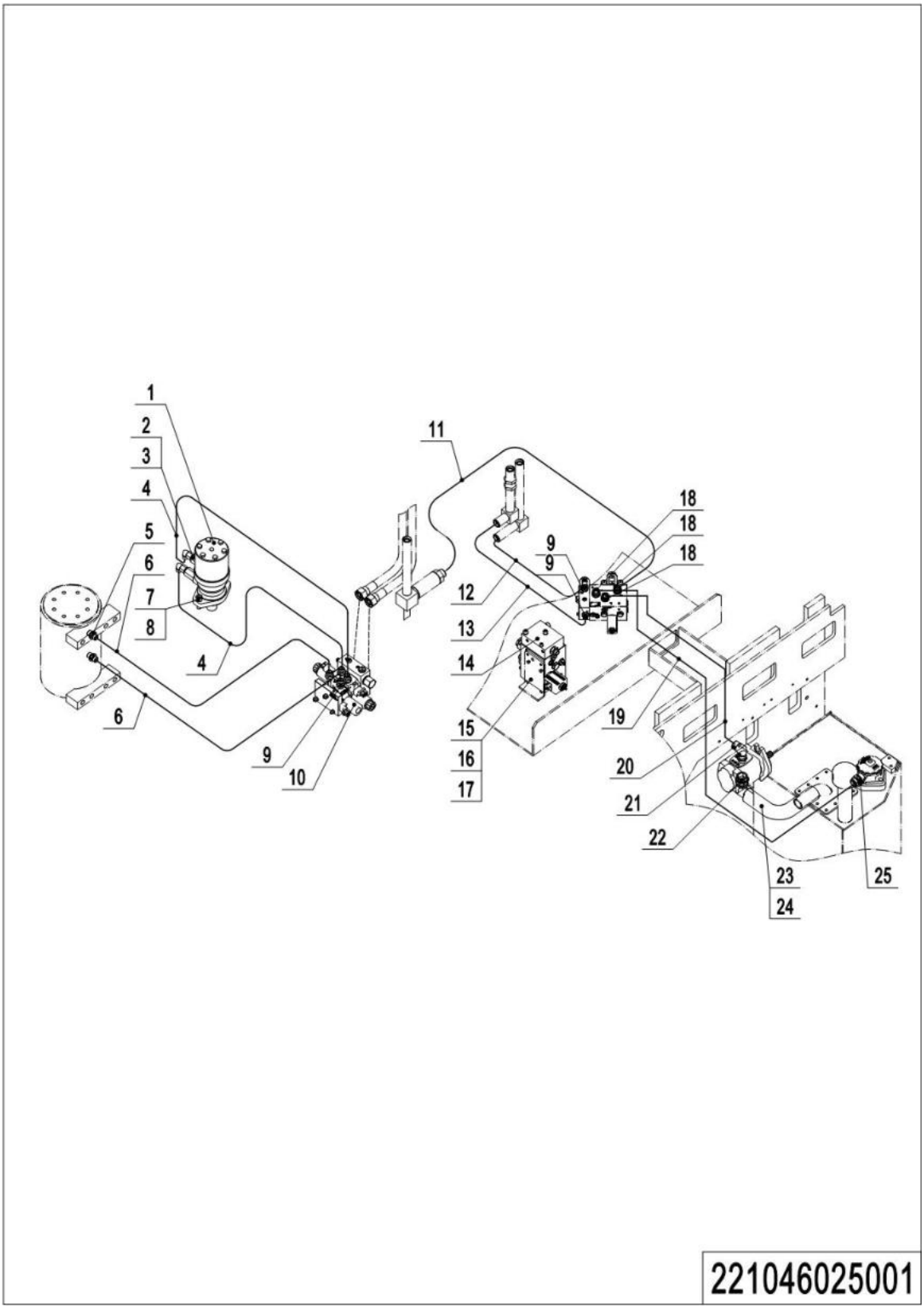

01 Hydraulic Assembly(221046025001)

No.	Item Code	Mark	Item Description	Qty.	Substitute	Note
1	950800100006		Hydraulic Motor	1		
2	950400400016		Adapter	2		
3	950400200003		Joint	2		
4	221025020000		Hose	2		
5	950400300006		Joint	2		
6	221025020001		Hose	2		
7	910200200099	1	Screw	2		
8	910400500008	1	Spring Washer	2		
9	950400300007		Joint	8		
10	950600100015		Hydraulic Valve	2		
11	212325520002		Hose	1		
12	221025020002		Hose	1		
13	221025020003		Hose	1		
14	950600100016		Hydraulic Valve	1		
15	910200200055	1	Screw	8		
16	910400500006	1	Spring Washer	8		
17	910400100006	1	Flat Washer	8		
18	950400300018		Joint	3		
19	221025020004		Hose	1		
20	221025020005		Hose	1		
21	950401100005		Joint	1		
22	216525020008		Adapter	1		
23	212125020001		Oil Tube	1		
24	911000600006		Hose Clamp	2		
25	950400300016		Joint	1		

1= Supply as package. 2= Supply with constraints. 3= Phasing-out supply. 4= Supply as assembly. 5= Check other tables.

02 Oil Tank(221046019001)

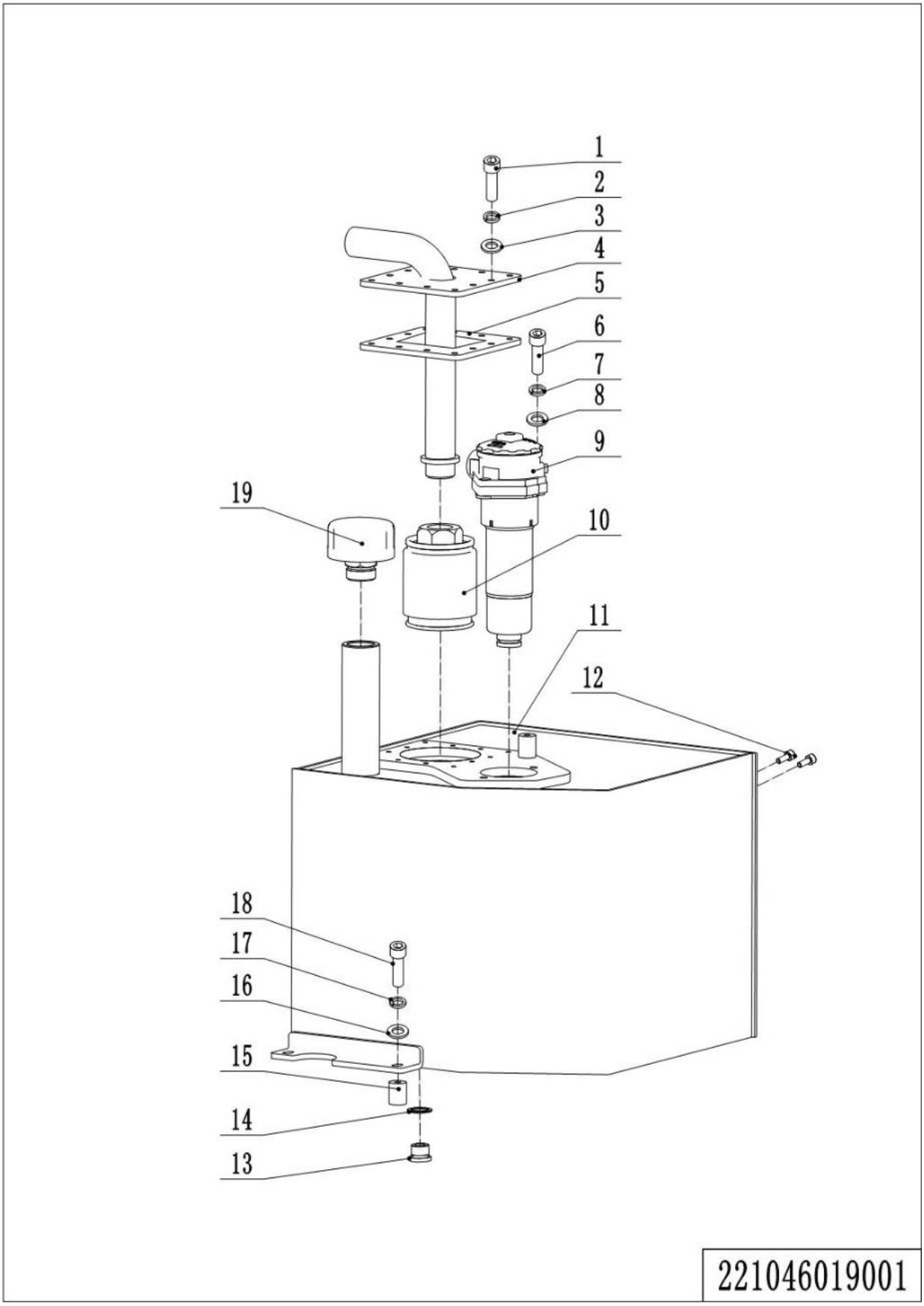

1= Supply as package. 2= Supply with constraints. 3= Phasing-out supply. 4= Supply as assembly. 5= Check other tables.

02 Oil Tank(221046019001)

No.	Item Code	Mark	Item Description	Qty.	Substitute	Note
1	910200200035	1	Screw	12		
2	910400500005	1	Spring Washer	12		
3	910400100005	1	Flat Washer	12		
4	221019010001		Close Plate	1		
5	212119020000		Sealing Gasket	1		
6	910200200077	1	Screw	2		
7	910400500007	1	Spring Washer	2		
8	910400100007	1	Flat Washer	2		
9	951000300003		Filter	1		
10	951000400001		Filter	1		
11	221019010000		Tank	1		
12	910200200074	1	Screw	4		
13	255019020015		Filler Plug	1		
14	910800900001		Bonded Washer	1		
15	532621520062		Crash Pad	2		
16	910400100006	1	Flat Washer	3		
17	910400500006	1	Spring Washer	3		
18	910200200058	1	Screw	2		
19	212119020019		Cap-Tank	1		

1= Supply as package. 2= Supply with constraints. 3= Phasing-out supply. 4= Supply as assembly. 5= Check other tables.

Chapter 3: Truck Frame

01 Chassis (221046021501)

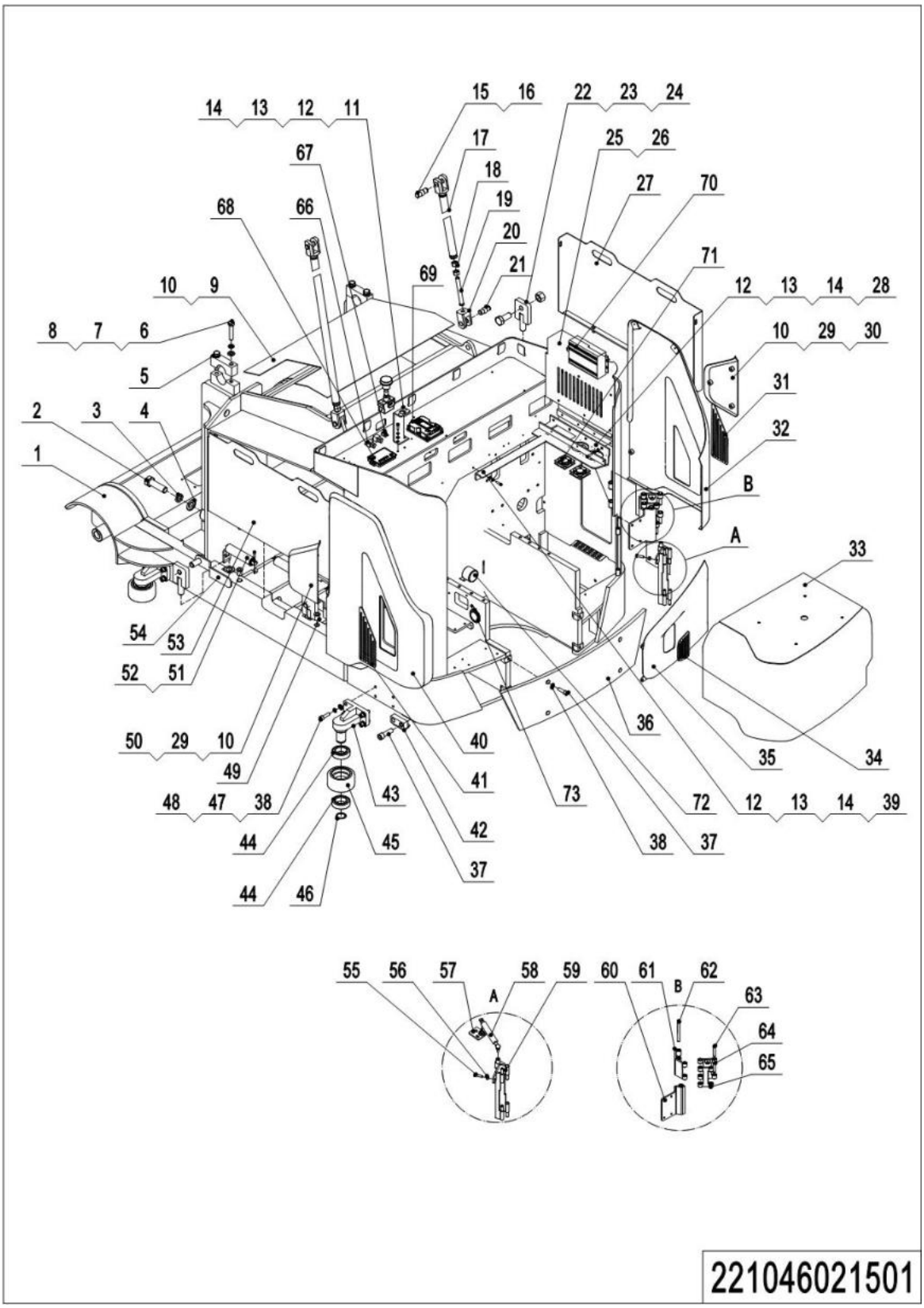

01 Chassis(221046021501)

No.	Item Code	Mark	Item Description	Qty.	Substitute	Note
1	221021510000		Chassis	1		
2	910100200010		Bolt	2		
3	910400500020		Washer	2		
4	910400100015	1	Flat Washer	2		
5	212144520217		Fixing Plate	2		
6	910100200017	1	Bolt	4		
7	910400100010	1	Flat Washer	4		
8	910400500010	1	Spring Washer	4		
9	221021520045		Close Plate	1		
10	941100100012	1	Screw,M8x20	18		
11	212121520008		Fixing Plate	1		
12	910200200055	1	Screw	9		
13	910400100006	1	Flat Washer	9		
14	910400500006	1	Spring Washer	9		
15	221044520121		Pin	2		
16	910401300011	1	Circlip	8		
17	221044510031		Rod	2		6500
17	221044510032		Rod	2		7500
17	221044510033		Rod	2		8500
17	221044510034		Rod	2		9500
18	910300200008	1	Nut	4		
19	221044520118		Screw	2		
20	221044520119		Adapter	2		
21	221044520115		Pin	2		
22	221021510006		Stop Dog	4		
23	91010030008	1	Bolt	2		
24	91030010001	1	Nut	2		
25	213321510001		Cover	1		
26	910200300017	1	Screw	6		
27	221021510007		Baffle	1		

1= Supply as package. 2= Supply with constraints. 3= Phasing-out supply. 4= Supply as assembly. 5= Check other tables.

01 Chassis (221046021501)Continuation1

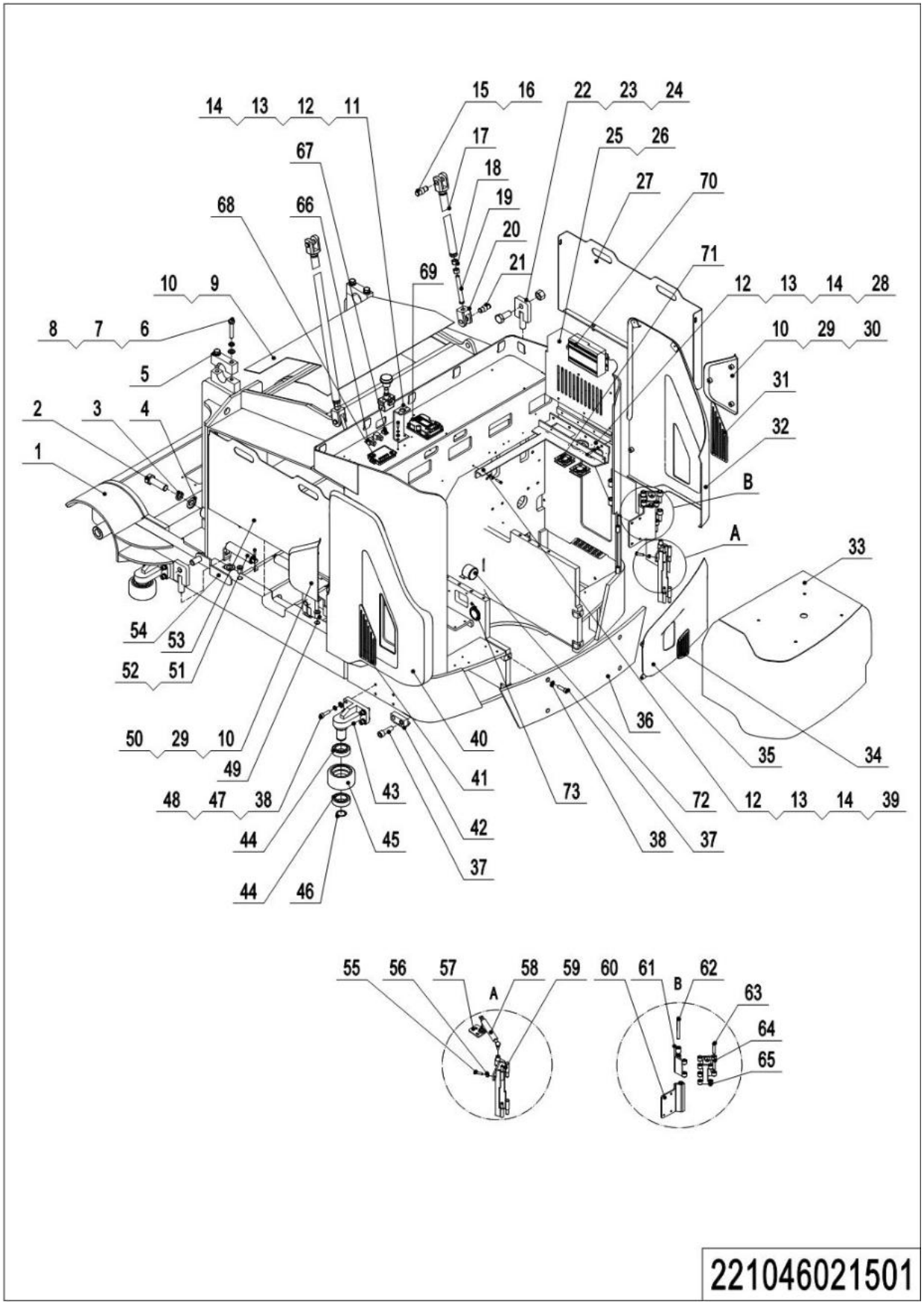

01 Chassis(221046021501)Continuation1

No.	Item Code	Mark	Item Description	Qty.	Substitute	Note
28	212121510006		Fixing Base	1		
29	910400200003	1	Flat Washer	14		
30	221021510008		Side Plate	1		
31	212121520101		Vent	1		
32	221021510005		Side Plate	1		
33	213321510008		Cover	1		
34	212121520102		Vent	1		
35	212121520091		Cover	1		
36	213321520023		Close Plate	1		
37	910200200098	1	Screw	8		
38	910400100008	1	Flat Washer	20		
39	212121520044		Bracket	1		
40	221021510004		Side Plate	1		
41	212121520100		Vent	1		
42	212121520068		Support Leg	2		
43	221050010001		Fixing Base	4		
44	910700200023		Bearing	8		
45	940300300040		Wheel	4		
46	910401300020	1	Circlip	4		
47	910400100008	1	Flat Washer	16		
48	910200200100	1	Screw	16		
49	221021520054		Nylon Sleeve	4		
50	221021510003		Side Plate	1		
51	212112510011		Roller	16		
52	910200200058	1	Screw	26		
53	221021510002		Baffle	1		
54	221021510009		Handle	2		
55	910100300024	1	Bolt	1		
56	910300100006	1	Nut	1		
57	212121510008		Fixing Base	1		

1= Supply as package. 2= Supply with constraints. 3= Phasing-out supply. 4= Supply as assembly. 5= Check other tables.

01 Chassis (221046021501)Continuation2

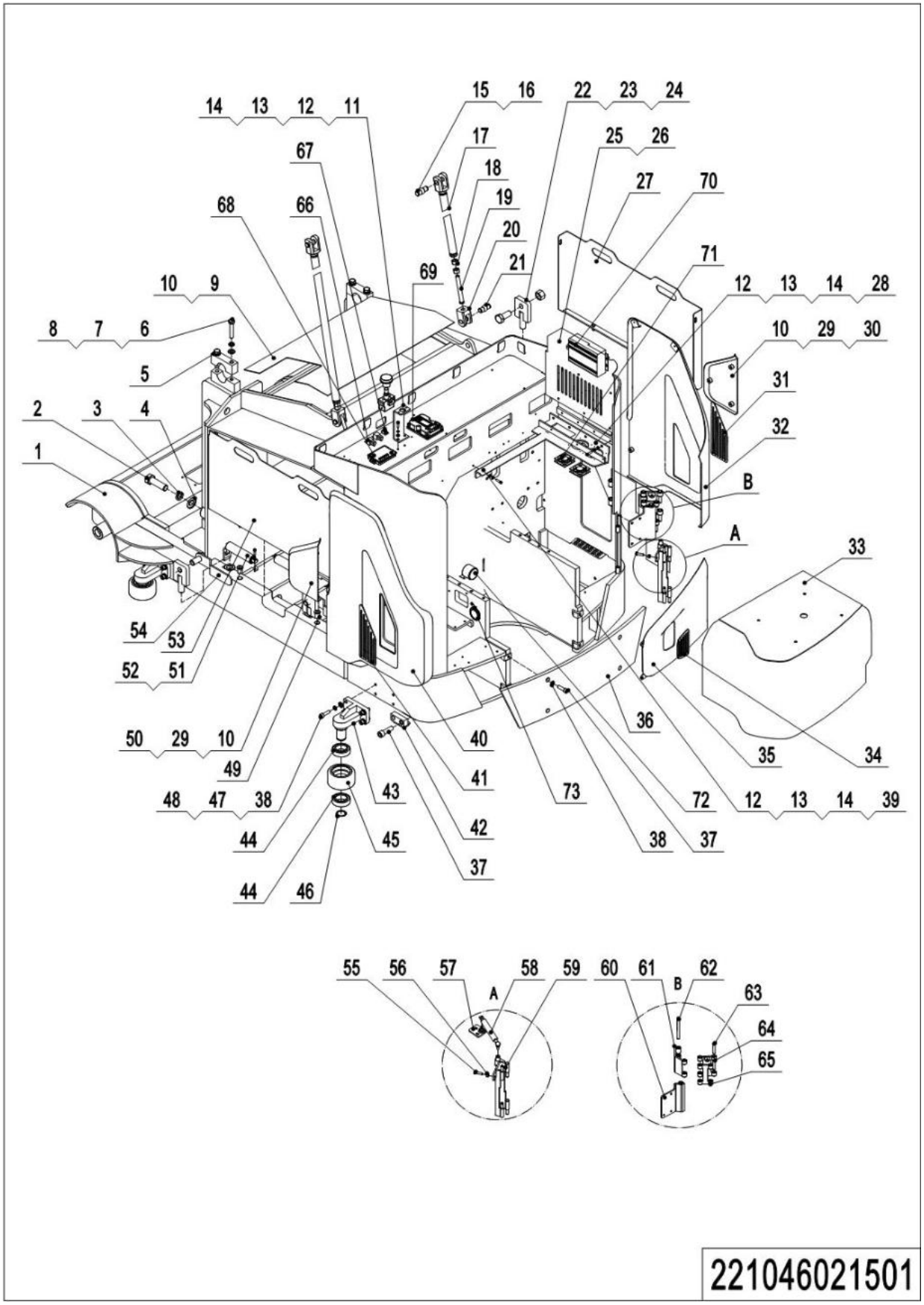

01 Chassis(221046021501)Continuation2

No.	Item Code	Mark	Item Description	Qty.	Substitute	Note
58	212121520048		Gas Spring	1		
59	213321510002		Hinge	1		
60	212221510002		Hinge	1		
61	212221510003		Plate	1		
62	212221520028		Pin	2		
63	212221520027		Pin	6		
64	212221510004		Rocker	1		
65	212221510005		Rocker	1		
66	920800100011		Relay	2		
67	922000100005		Lamp	1		
68	921400100115		Controller	1		
69	921400100113		Controller	1		
70	921900100005		Converter	1		
71	212133510018		Fan	2		
72	920500100002		Horn	1		
73	920500100001		Horn	1		

02 Overhead Guard(221046022001)

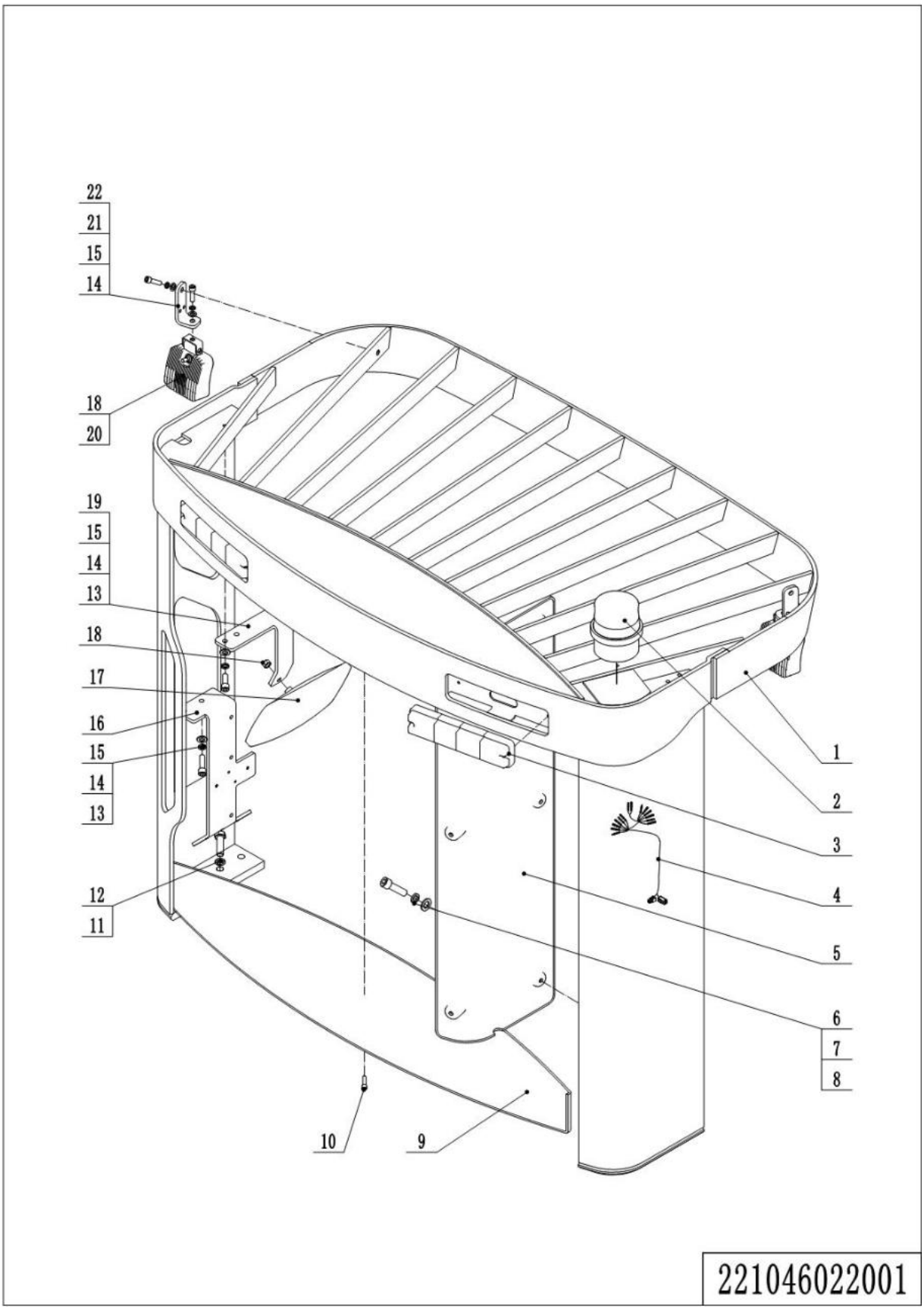

1= Supply as package. 2= Supply with constraints. 3= Phasing-out supply. 4= Supply as assembly. 5= Check other tables.

02 Overhead Guard(221046022001)

No.	Item Code	Mark	Item Description	Qty.	Substitute	Note
1	212122010000		Overhead Guard	1		
2	922000100004		Lamp	1		
3	922000100003		Lamp	2		
4	221033010002		Wire Harness	1		
5	212122020021		Cover	1		
6	910200300017	1	Screw	6		
7	910400500005	1	Spring Washer	6		
8	910400100005	1	Flat Washer	6		
9	212122020020		Cover	1		
10	910200300017	1	Screw	1		
11	910200300037	1	Screw	8		
12	910400500008	1	Spring Washer	8		
13	910200200055	1	Screw	4		
14	910400500006	1	Spring Washer	8		
15	910400100006	1	Flat Washer	8		
16	221036020001		Mounting Plate	1		
17	940800100001		Rearview Mirror	1		
18	910300100006	1	Nut	5		
19	212122020022		Mirror	1		
20	922000100016		Lamp	2		
21	910200200058	1	Screw	4		
22	212122020023		Mounting Plate	2		

1= Supply as package. 2= Supply with constraints. 3= Phasing-out supply. 4= Supply as assembly. 5= Check other tables.

03 Platform (213346018001)

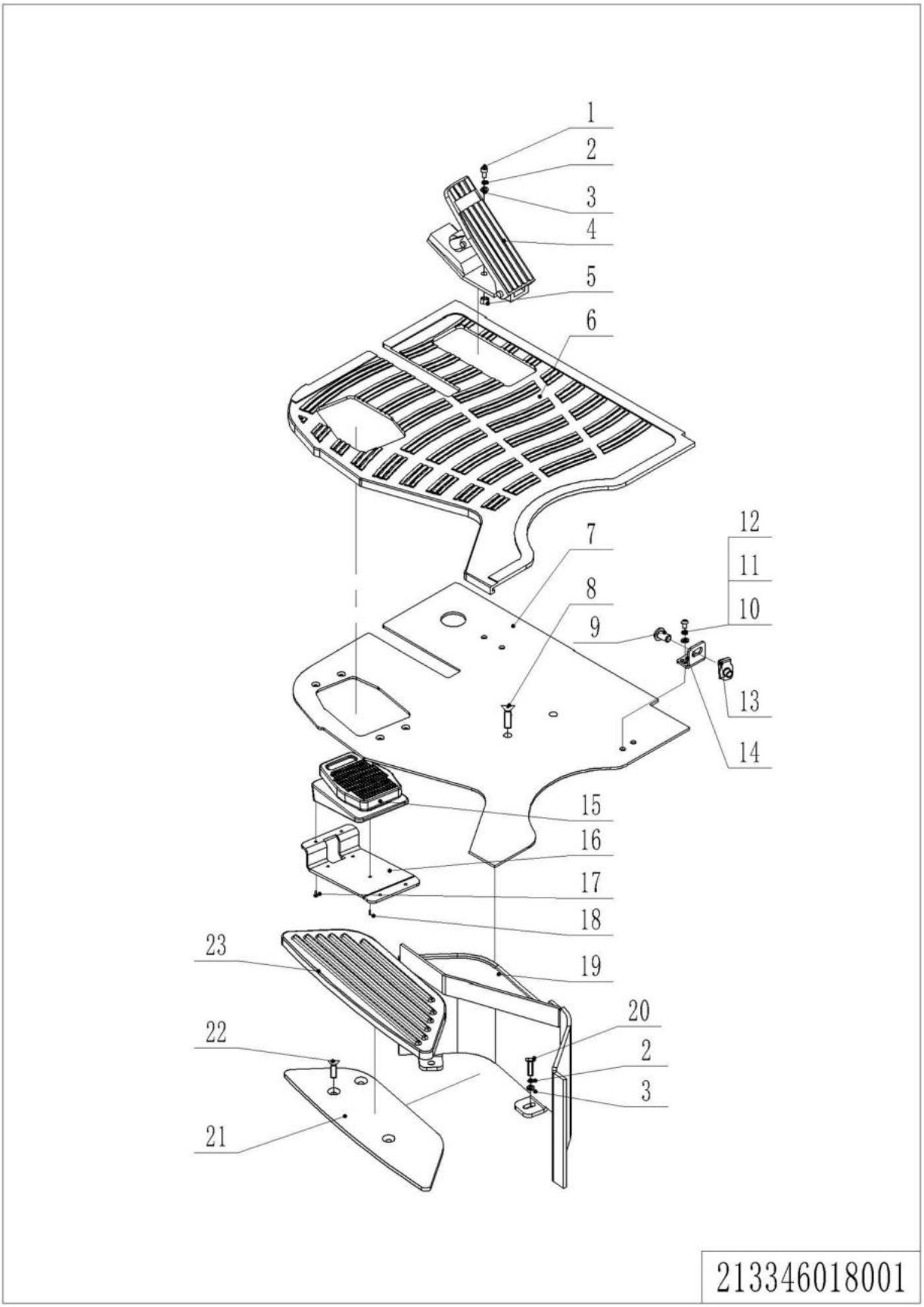

1= Supply as package. 2= Supply with constraints. 3= Phasing-out supply. 4= Supply as assembly. 5= Check other tables.

03 Platform(213346018001)

No.	Item Code	Mark	Item Description	Qty.	Substitute	Note
1	910200200057	1	Screw	2		
2	910400100006	1	Flat Washer	4		
3	910400500006	1	Spring Washer	4		
4	921700100005		Accelerator	1		
5	910300100006	1	Nut	2		
6	212118020000		Mat	1		
7	213318020001		Platform	1		
8	910200400033	1	Screw	2		
9	941100100012	1	Screw,M8x20	1		
10	910200200033	1	Screw	2		
11	910400100005	1	Flat Washer	2		
12	910400500005	1	Spring Washer	2		
13	940400400002	1	Cage Nut	1		
14	213318020002		Fixing Plate	1		
15	212133510019		Foot Switch	1		
16	212118020008		Mounting Plate	1		
17	910200400009	1	Screw	4		
18	212198520048	1	Screw	3		
19	213318010000		Bracket	1		
20	910100300022	1	Bolt	2		
21	212118010001		Platform	1		
22	910200400026	1	Screw	3		
23	212118020002		Mat	1		

1= Supply as package. 2= Supply with constraints. 3= Phasing-out supply. 4= Supply as assembly. 5= Check other tables.

04 Seat (212146037501)

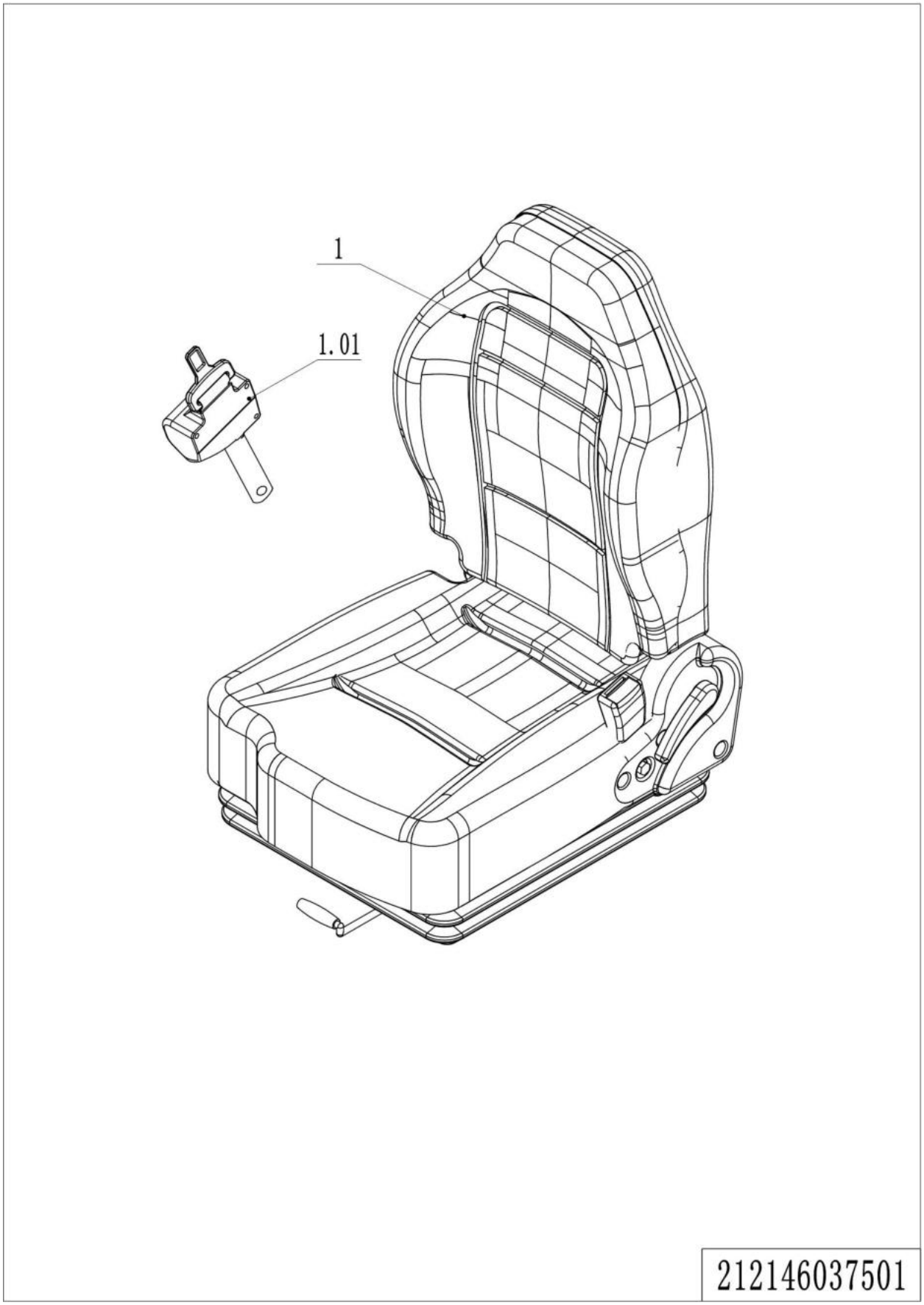

1= Supply as package. 2= Supply with constraints. 3= Phasing-out supply. 4= Supply as assembly. 5= Check other tables.

04 Seat(212146037501)

No.	Item Code	Mark	Item Description	Qty.	Substitute	Note
1	213037510000		Seat	1		
1.01	213098510052		Safety Belt	1		

Chapter 4: Mast

01 Outer Mast(221046044501)

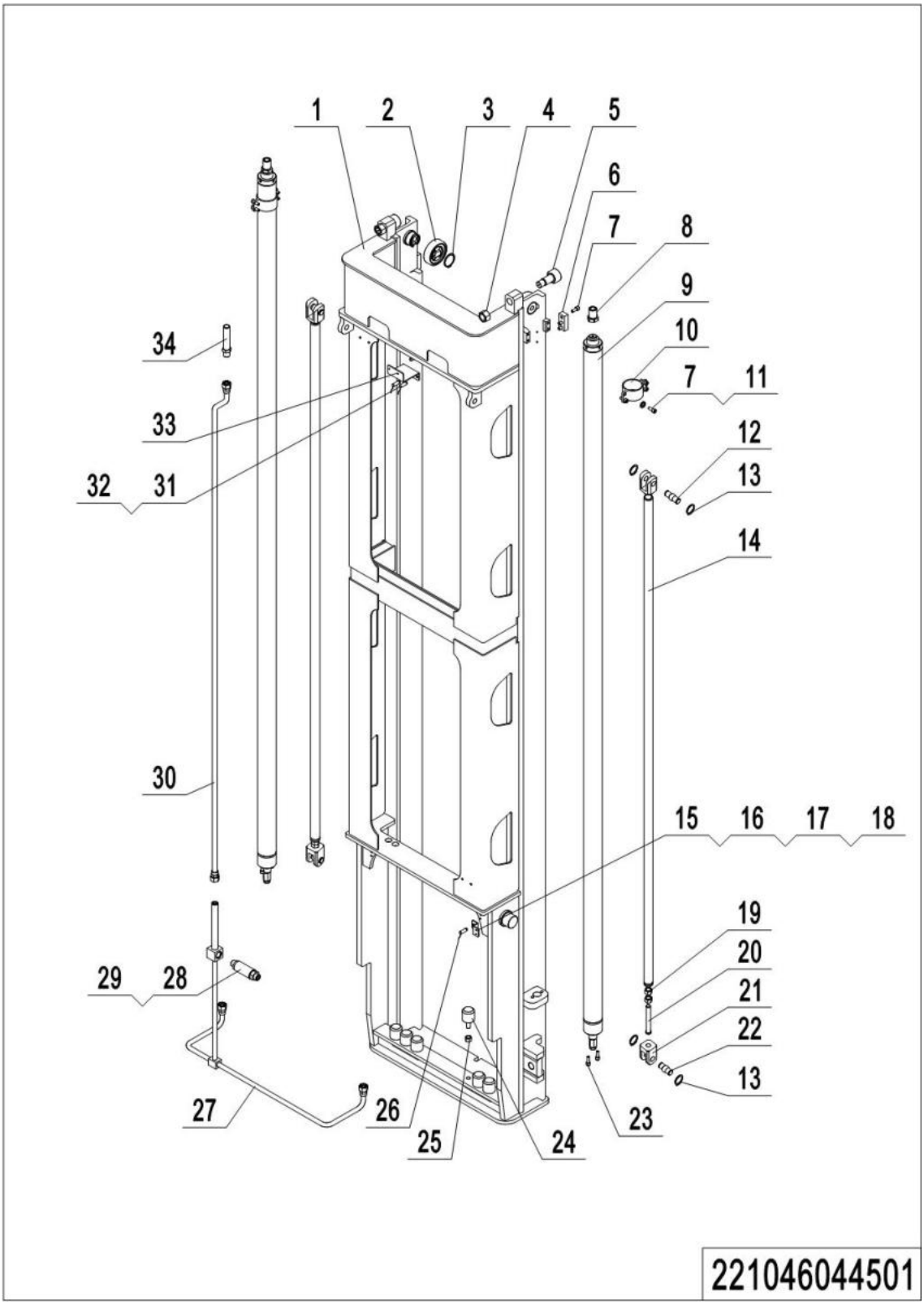

01 Outer Mast(221046044501)

No.	Item Code	Mark	Item Description	Qty.	Substitute	Note
1	221044510001		Outer Mast(6500)	1		6500
1	221044510002		Outer Mast(7500)	1		7500
1	221044510003		Outer Mast(8500)	1		8500
1	221044510004		Outer Mast(9500)	1		9500
2	940200300055		Compound Roller	2		
3	910401300026	1	Circlip	2		
4	910300200006		Nut	2		
5	221044510046		Roller	2		
6	221044510047		Stop Dog	2		
7	910200200076	1	Screw	12		
8	212144520060		Barrel	2		
9	221044510057		Cylinder	2		6500
9	221044510058		Cylinder	2		7500
9	221044510059		Cylinder	2		8500
9	221044510060		Cylinder	2		9500
9.01	213398520001		Seal Kit	1		
10	221044510045		Fixing Base	2		
11	910400500006	1	Spring Washer	8		
12	221044520121		Pin	2		
13	910401300011	1	Circlip	8		
14	221044510031		Rod	2		6500
14	221044510032		Rod	2		7500
14	221044510033		Rod	2		8500
14	221044510034		Rod	2		9500
15	221044520080		Fixing Plate	1		
16	910200200033	1	Screw	4		
17	910400100005	1	Flat Washer	4		
18	910400500005	1	Spring Washer	4		
19	910300200008	1	Nut	4		
20	221044520118		Screw	2		

1= Supply as package. 2= Supply with constraints. 3= Phasing-out supply. 4= Supply as assembly. 5= Check other tables.

01 Outer Mast(221046044501)Continuation

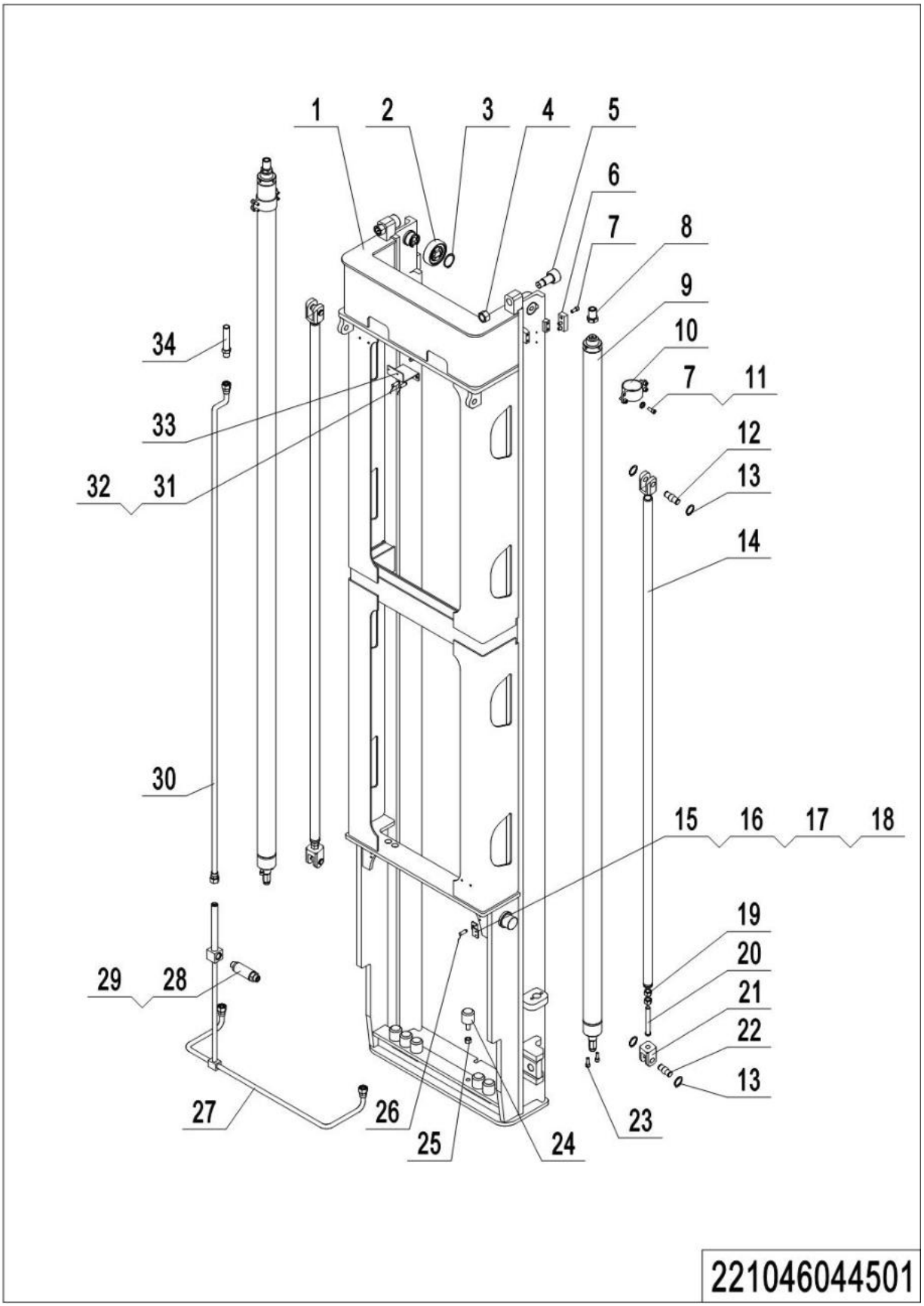

01 Outer Mast(221046044501)Continuation

No.	Item Code	Mark	Item Description	Qty.	Substitute	Note
21	221044520119		Adapter	2		
22	221044520115		Pin	2		
23	910200200077	1	Screw	4		
24	212144520065		Crash Pad	6		
25	910300500008	1	Nut	6		
26	221033510008		Switch	1		
27	221044510100		Steel Tube	1		
28	950700300005		Speed Limit Valve	1		
29	910800100017		O-Ring	1		
30	221044520127		Steel Tube	1		6500
30	221044520128		Steel Tube	1		7500
30	221044520129		Steel Tube	1		8500
30	221044520130		Steel Tube	1		9500
31	221033510007		Switch	1		
32	221033510008		Switch	1		
33	221044520081		Fixing Plate	1		
34	950400500003		Joint	1		

02 Middle Mast(221046044502)

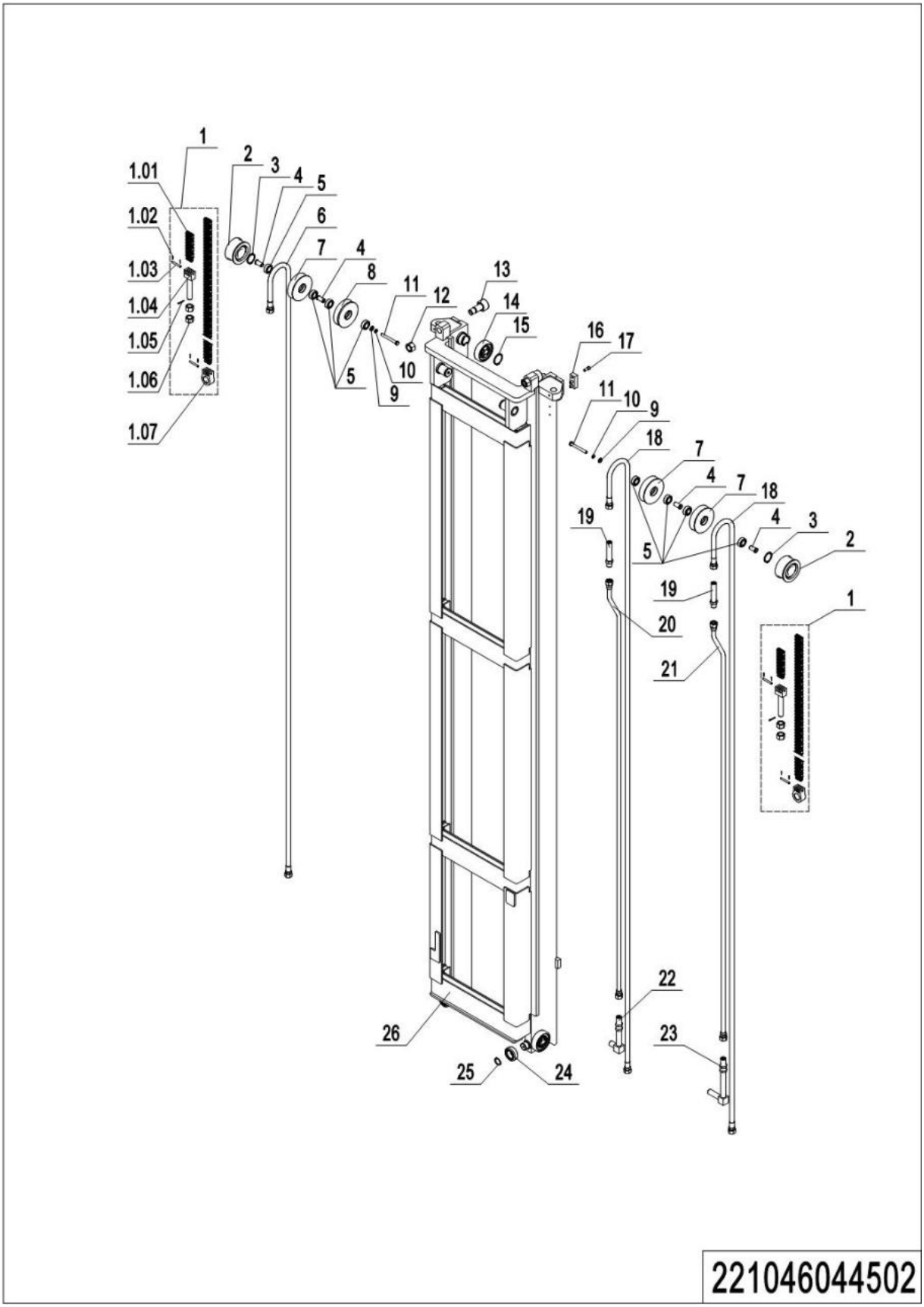

1= Supply as package. 2= Supply with constraints. 3= Phasing-out supply. 4= Supply as assembly. 5= Check other tables.

02 Middle Mast(221046044502)

No.	Item Code	Mark	Item Description	Qty.	Substitute	Note
1	221044510091		Chain	2		6500
1	221044510092		Chain	2		7500
1	221044510093		Chain	2		8500
1	221044510094		Chain	2		9500
1.01	910900400013		Chain	1		
1.02	910600600011	1	Cotter Pin	4		
1.03	254143520073		Pin	2		
1.04	254143520070		Chain Anchor	1		
1.05	910600600030	1	Cotter Pin	1		
1.06	910300400007	1	Nut	2		
1.07	221044520101		Anchor	1		
2	221044510110		Chain Pulley	2		
3	910401300024	1	Circlip	2		
4	221044520085		Sleeve	4		
5	910700200019		Bearing	8		
6	221044520137		Hose	1		6500
6	221044520138		Hose	1		7500
6	221044520139		Hose	1		8500
6	221044520140		Hose	1		9500
7	221044520120		Pulley	3		
8	212144520050		Pulley	1		
9	910400100008	1	Flat Washer	2		
10	910400500008	1	Spring Washer	2		
11	910100100058	1	Bolt	2		
12	910300200006		Nut	2		
13	221044510046		Roller	2		
14	940200300054		Compound Roller	4		
15	910401300026	1	Circlip	4		
16	221044510047		Stop Dog	2		
17	910200200076	1	Screw	4		

1= Supply as package. 2= Supply with constraints. 3= Phasing-out supply. 4= Supply as assembly. 5= Check other tables.

02 Middle Mast(221046044502)Continuation

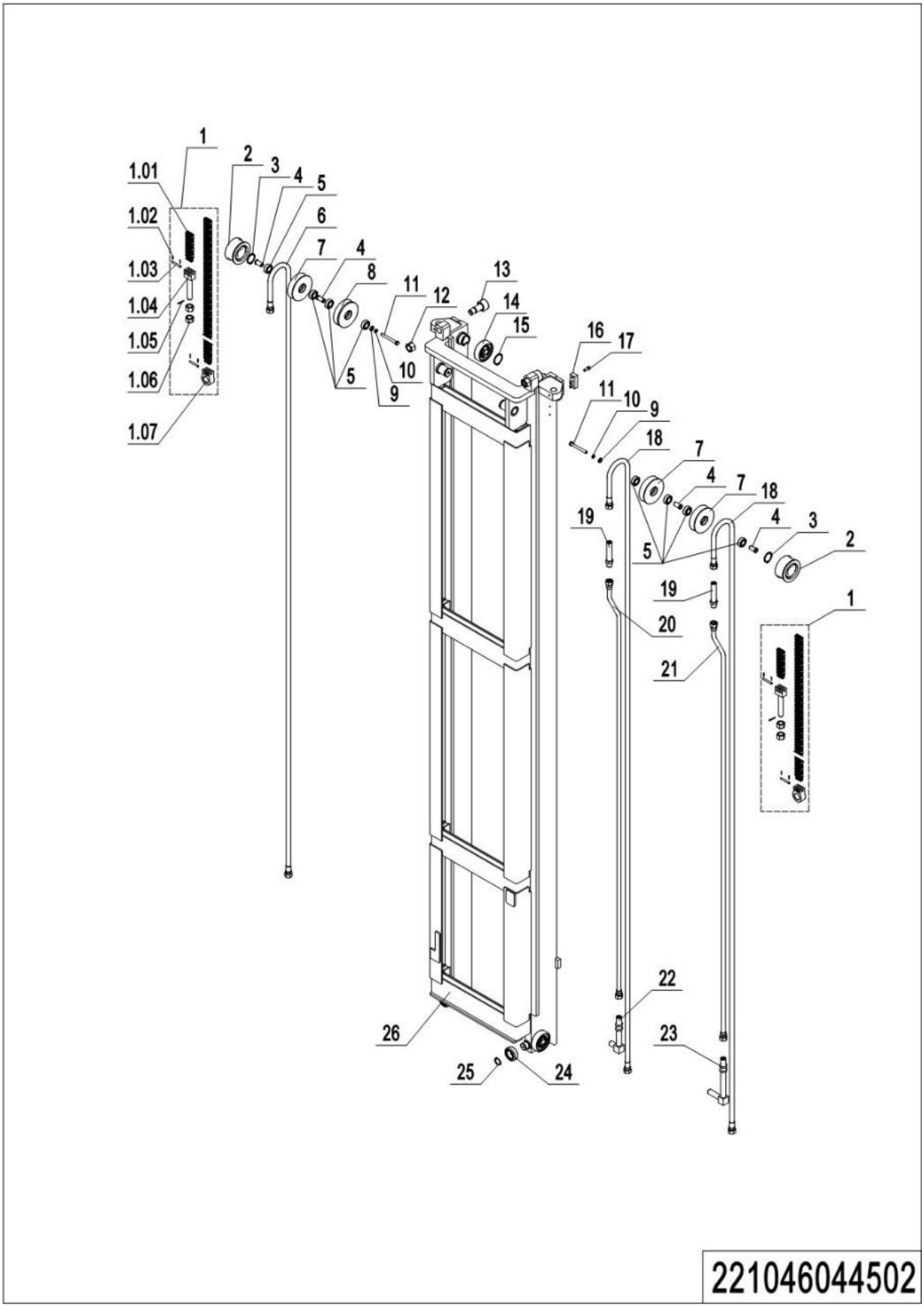

1= Supply as package. 2= Supply with constraints. 3= Phasing-out supply. 4= Supply as assembly. 5= Check other tables.

02 Middle Mast(221046044502)Continuation

No.	Item Code	Mark	Item Description	Qty.	Substitute	Note
18	221044520167		Hose	2		6500
18	221044520168		Hose	2		7500
18	221044520169		Hose	2		8500
18	221044520170		Hose	2		9500
19	950400500004		Joint	2		
20	221044520147		Steel Tube	1		6500
20	221044520148		Steel Tube	1		7500
20	221044520149		Steel Tube	1		8500
20	221044520150		Steel Tube	1		9500
21	221044520177		Steel Tube	1		6500
21	221044520178		Steel Tube	1		7500
21	221044520179		Steel Tube	1		8500
21	221044520180		Steel Tube	1		9500
22	221044520113		Adapter	1		
23	221044520114		Adapter	1		
24	940200100045		Main Roller	2		
25	910401300018	1	Circlip	2		
26	221044510011		Middle Mast(6500)	1		6500
26	221044510012		Middle Mast(7500)	1		7500
26	221044510013		Middle Mast(8500)	1		8500
26	221044510014		Middle Mast(9500)	1		9500

03 Inner Mast(221046044503)

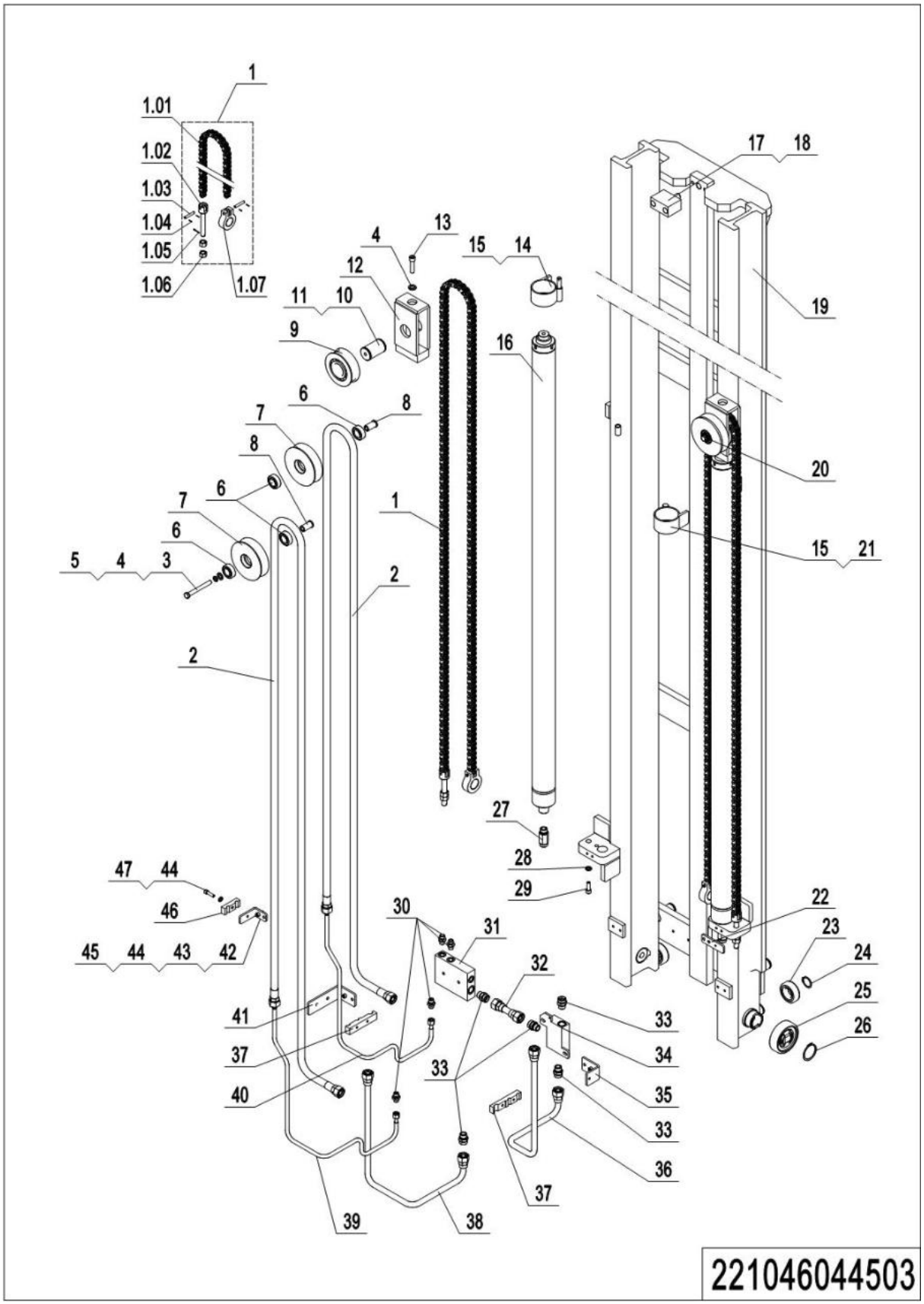

1= Supply as package. 2= Supply with constraints. 3= Phasing-out supply. 4= Supply as assembly. 5= Check other tables.

03 Inner Mast(221046044503)

No.	Item Code	Mark	Item Description	Qty.	Substitute	Note
1	221044510081		Chain	2		6500
1	221044510082		Chain	2		7500
1	221044510083		Chain	2		8500
1	221044510084		Chain	2		9500
1.01	910900400010		Chain	1		
1.02	941300100012		Chain Bolt	1		
1.03	401143520024		Axle	2		
1.04	910600600011	1	Cotter Pin	4		
1.05	910600600030	1	Cotter Pin	1		
1.06	910300200008	1	Nut	2		
1.07	221044520100		Anchor	1		
2	221044520157		Hose	2		6500
2	221044520158		Hose	2		7500
2	221044520159		Hose	2		8500
2	221044520160		Hose	2		9500
3	910100100058	1	Bolt	1		
4	910400500008	1	Spring Washer	6		
5	910400100008	1	Flat Washer	2		
6	910700200019		Bearing	6		
7	221044520120		Pulley	3		
8	221044520085		Sleeve	3		
9	221044510111		Chain Pulley	2		
10	221044520093		Axle	2		
11	910401300022	1	Circlip	4		
12	221044510048		Yoke	2		
13	910200200102	1	Screw	2		
14	221044510115		Fixing Base	1		
15	910600600036	1	Cotter Pin	2		
16	221044510071		Cylinder	2		6500
16	221044510072		Cylinder	2		7500

1= Supply as package. 2= Supply with constraints. 3= Phasing-out supply. 4= Supply as assembly. 5= Check other tables.

03 Inner Mast(221046044503)Continuation1

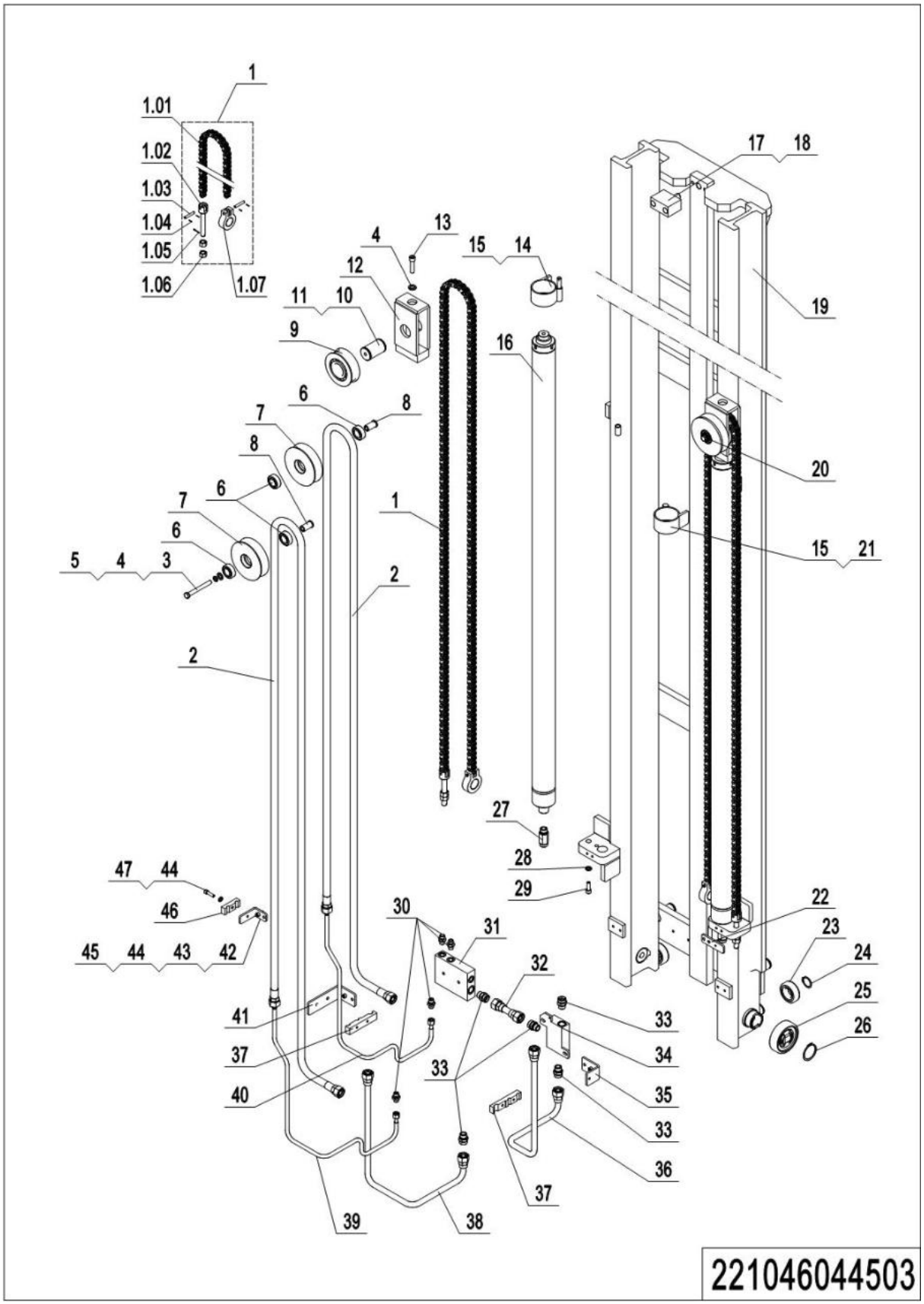

03 Inner Mast(221046044503)Continuation1

No.	Item Code	Mark	Item Description	Qty.	Substitute	Note
16	221044510073		Cylinder	2		8500
16	221044510074		Cylinder	2		9500
16.01	213398520001		Seal Kit	2		
17	221044510049		Buffer Base	1		
18	910200200101		Screw	2		
19	221044510021		Inner Mast(6500)	1		6500
19	221044510022		Inner Mast(7500)	1		7500
19	221044510023		Inner Mast(8500)	1		8500
19	221044510024		Inner Mast(9500)	1		9500
20	910100100051	1	Bolt	1		
21	221044510064		Fixing Base	1		
22	221044520089		Fixing Plate	1		
23	940200100045		Main Roller	2		
24	910401300018	1	Circlip	2		
25	940200300054		Compound Roller	2		
26	910401300026	1	Circlip	2		
27	221098520000		Anti-explosion Valve	2		
28	910200200077	1	Screw	2		
29	910400500007	1	Spring Washer	2		
30	950400400003		Joint	4		
31	221044520108		Valve Block	1		
32	951100300007		Plug	2		
33	950400400011		Joint	5		
34	221044510116		Valve Block	1		
35	221044520090		Fixing Plate	1		
36	221044520111		Steel Tube	1		
37	221044520087		Press Plate	2		
38	221044520105		Steel Tube	1		
39	221044520107		Steel Tube	1		
40	221044520106		Steel Tube	1		

1= Supply as package. 2= Supply with constraints. 3= Phasing-out supply. 4= Supply as assembly. 5= Check other tables.

03 Inner Mast(221046044503)Continuation2

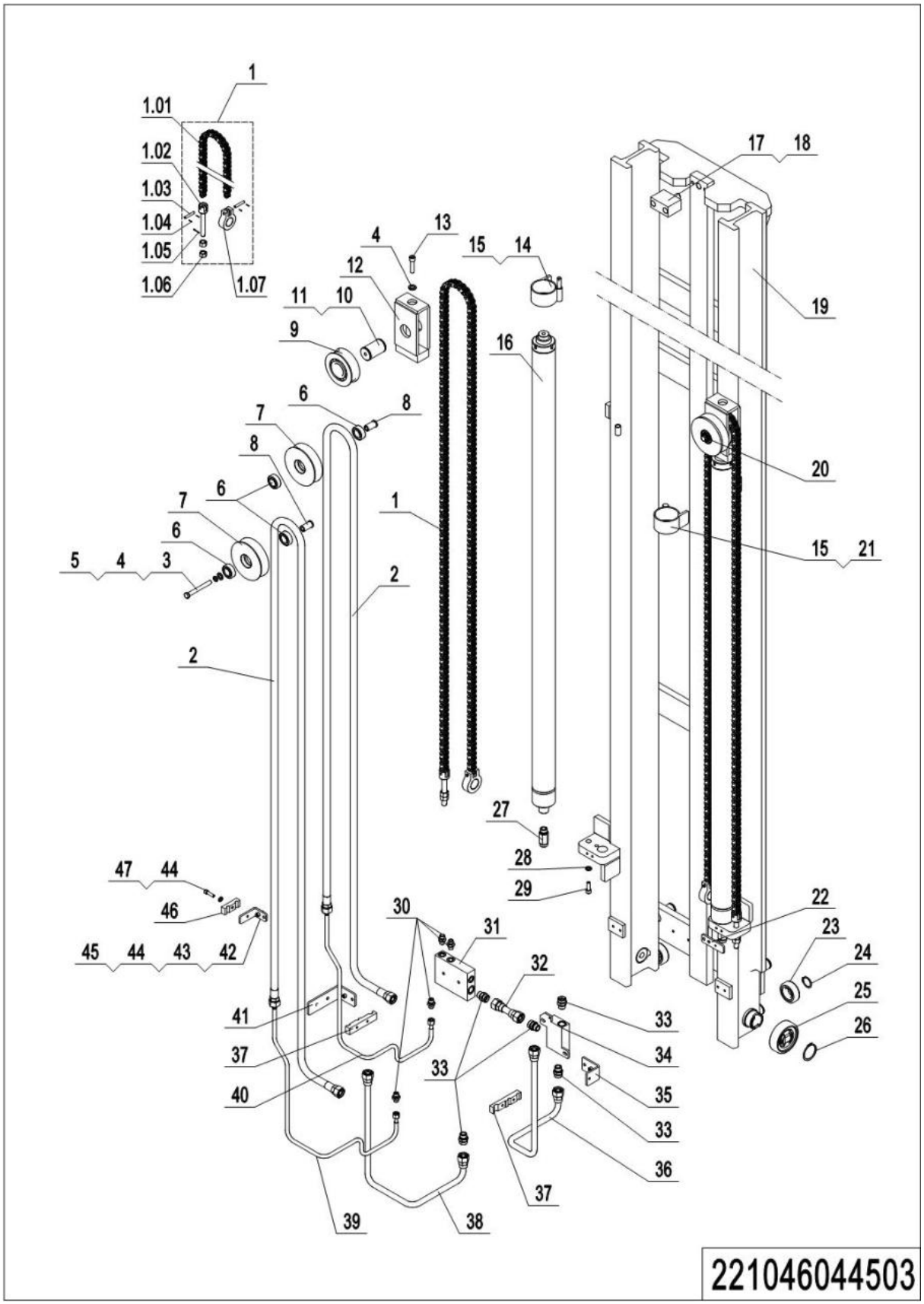

03 Inner Mast(221046044503)Continuation2

No.	Item Code	Mark	Item Description	Qty.	Substitute	Note
41	221044520086		Fixing Plate	1		
42	221044520088		Fixing Plate	1		
43	910200200056	1	Screw	8		
44	910400500006	1	Spring Washer	12		
45	910400100006	1	Flat Washer	8		
46	221044520092		Press Plate	1		
47	910200200059	1	Screw	4		

04 Inner carriage (221046038001)

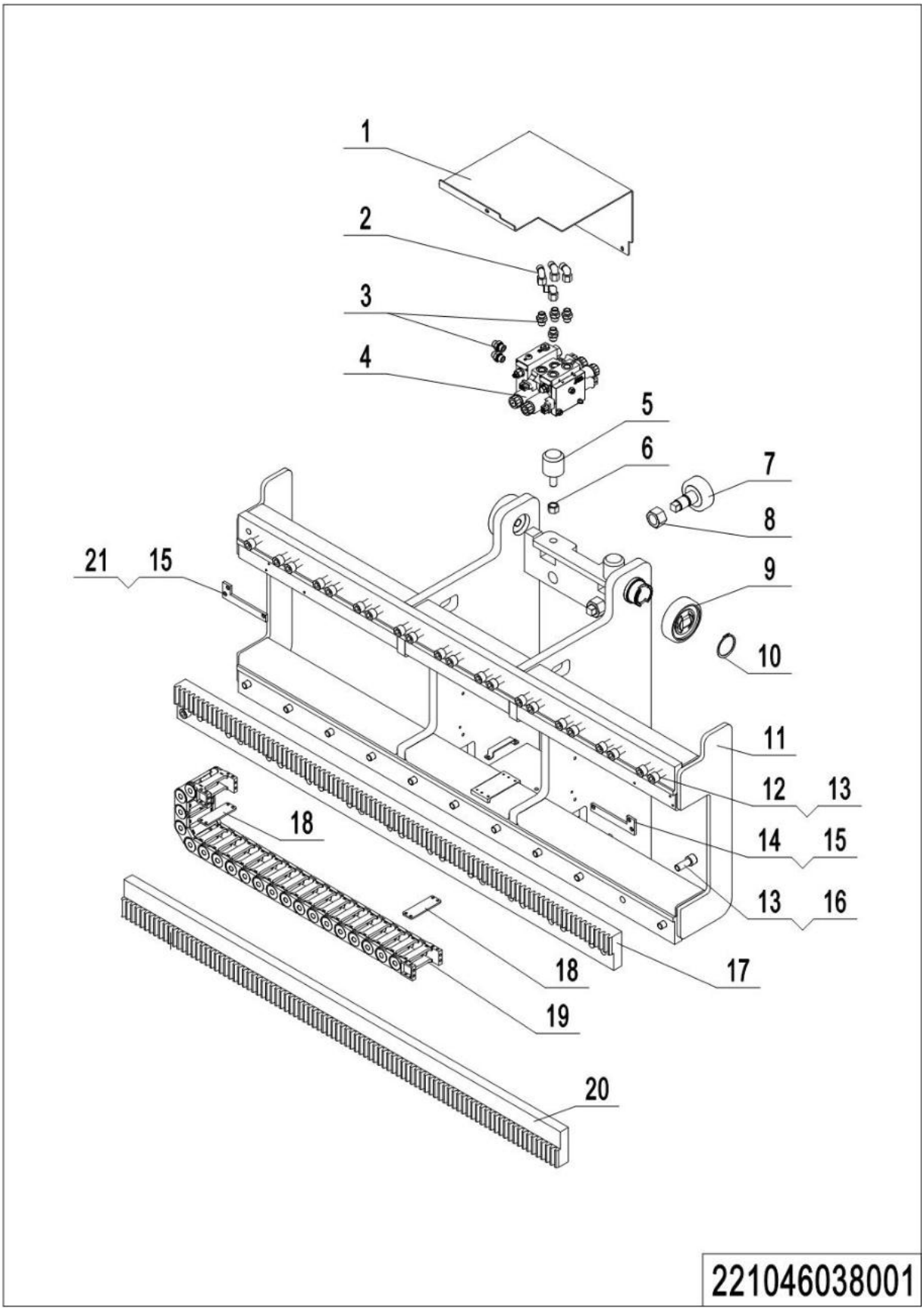

1= Supply as package. 2= Supply with constraints. 3= Phasing-out supply. 4= Supply as assembly. 5= Check other tables.

04 Inner carriage (221046038001)

No.	Item Code	Mark	Item Description	Qty.	Substitute	Note
1	221038020060		Close Plate	1		
2	950400200003		Joint	4		
3	950400300007		Joint	6		
4	950600100015		Hydraulic Valve	1		
5	212144520065		Crash Pad	2		
6	910300500008	1	Nut	2		
7	221038010005		Eccenter	4		
8	910300100019	1	Nut	4		
9	940200300055		Compound Roller	4		
10	910401300026	1	Circlip	4		
11	221038010000		Carriage	1		
12	910202500002		Screw	22		
13	910400500010	1	Spring Washer	33		
14	221038020058		Fixing Plate	1		
15	910200400016	1	Screw	6		
16	910202500003		Screw	11		
17	221038020057		Gear Rack	1		
18	221038020033		Press Plate	2		
19	221038010004		Drag Chain	1		
20	221038020059		Gear Rack	1		
21	221038020056		Fixing Plate	1		

05 Side shift carriage (221046038002)

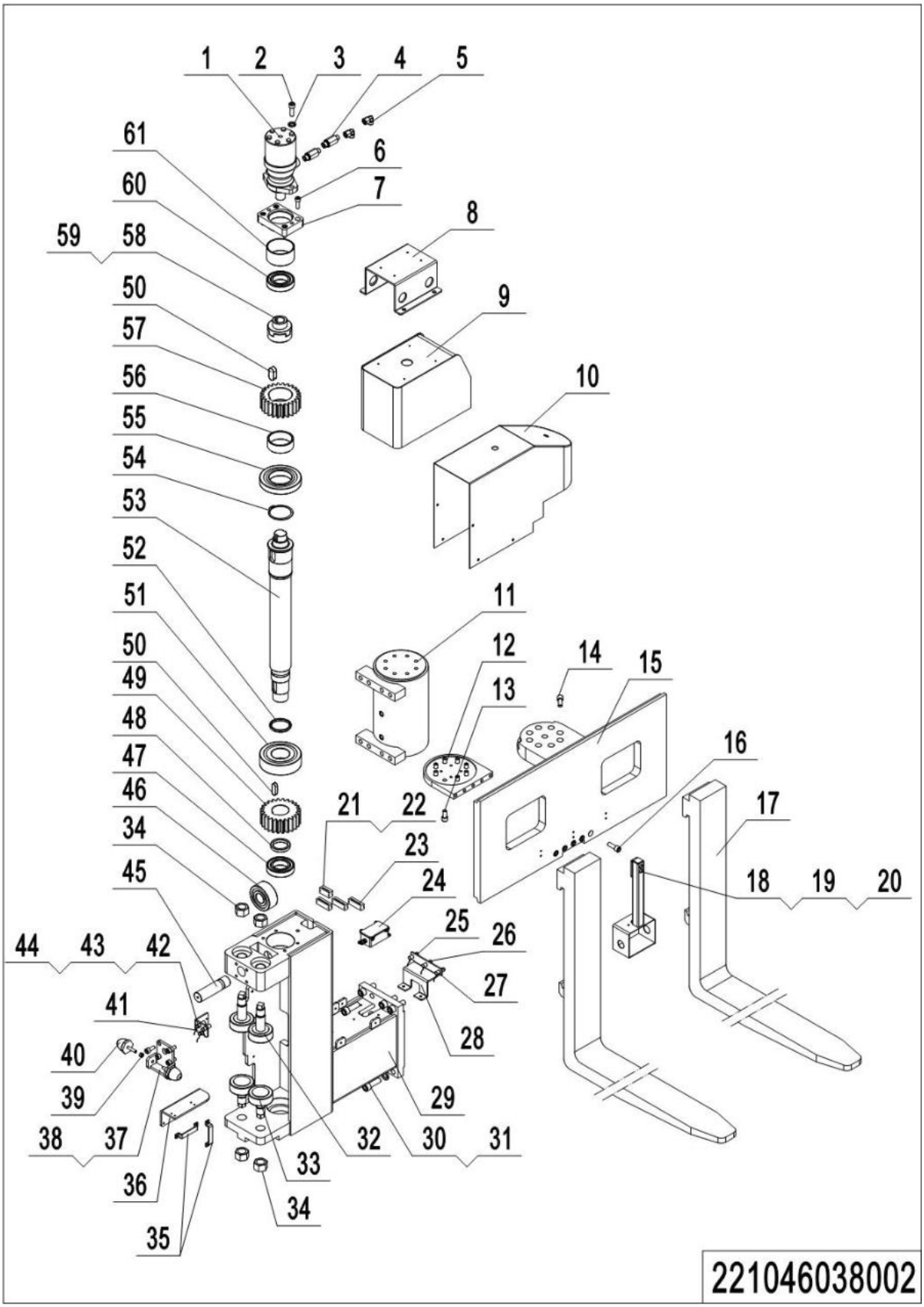

05 Side shift carriage (221046038002)

No.	Item Code	Mark	Item Description	Qty.	Substitute	Note
1	950800100006		Hydraulic Motor	1		
2	910200200099	1	Screw	2		
3	910400500008	1	Spring Washer	2		
4	950400400016		Adapter	2		
5	950400200003		Joint	2		
6	910200200077	1	Screw	4		
7	221038020043		Flange	1		
8	221036020000		Fixing Plate	1		
9	221038010003		Cover	1		
10	221038010012		Protective Cover	1		
11	221038010011		Cylinder	1		
12	221038020032		Fixing Plate	1		
13	910200200097	1	Screw	8		
14	910200200098	1	Screw	8		
15	221038010002		Fork Carriage	1		
16	910200200099	1	Screw	5		
17	221041010000		Fork	2		1070
17	221041010001		Fork	2		1150
17	221041010002		Fork	2		1220
17	221041010003		Fork	2		1370
17	221041010004		Fork	2		1520
18	221036010001		Fixing Base	1		
19	221036020011		Spacer Bush	1		
20	910200200036	1	Screw	2		
21	920400400062		Terminal	1		
22	920400200232		Plugin	2		
23	920400400063		Terminal	3		
24	921900100016		Converter	1		
25	221033510003		Switch	1		
26	221033510005		Switch	1		

1= Supply as package. 2= Supply with constraints. 3= Phasing-out supply. 4= Supply as assembly. 5= Check other tables.

05 Side shift carriage (221046038002) Continuation 1

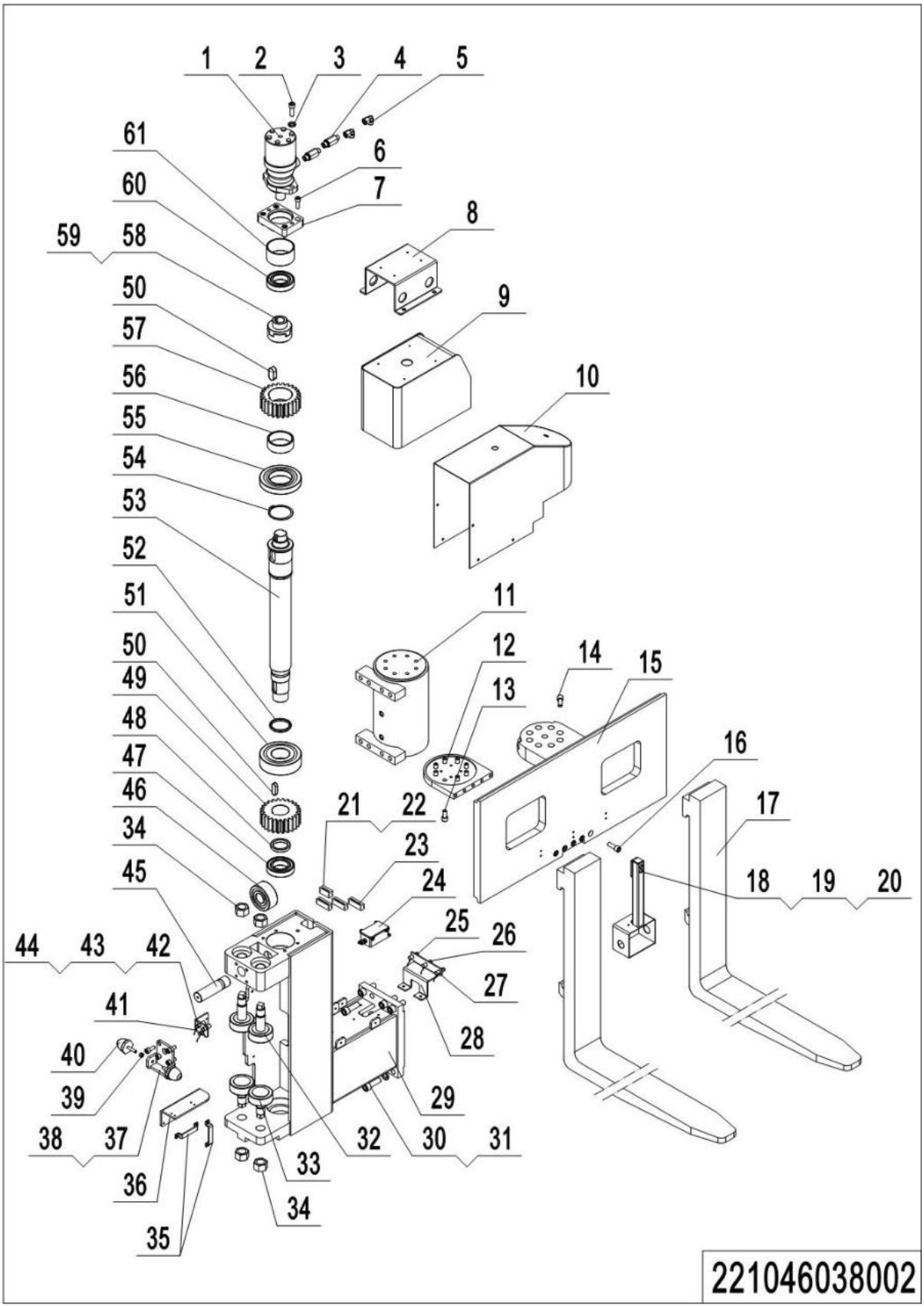

05 Side shift carriage (221046038002) Continuation 1

No.	Item Code	Mark	Item Description	Qty.	Substitute	Note
27	221033510004		Switch	1		
28	221038020042		Fixing Plate	1		
29	221038010001		Mounting Rack	1		
30	910200200123	1	Screw	8		
31	910400500010	1	Spring Washer	8		
32	221038010006		Eccenter	2		
33	221038010005		Eccenter	2		
34	910300100019	1	Nut	4		
35	221038020034		Press Plate	2		
36	221038020035		Fixing Plate	1		
37	221038010008		Fixing Base	1		
38	910200200076	1	Screw	4		
39	910300500004	1	Nut	4		
40	212144520242		Crash Pad	2		
41	221038020041		Fixing Plate	1		
42	221033510000		Switch	1		
43	221033510002		Switch	1		
44	221033510001		Switch	1		
45	221038020052		Axle	1		
46	221038010010		Main Roller	1		
47	910700600010		Bearing	1		
48	221038020063		Dust Cap	1		
49	221038020068		Gear	1		
50	910600800037		Feather Key	8		
51	221038010015		Main Roller	1		
52	221038020062		Dust Cap	1		
53	221038020046		Axle	1		
54	910401300032		Circlip	1		
55	221038010014		Main Roller	1		
56	221038020045		Spacer Bush	1		
57	221038020067		Gear	1		

05 Side shift carriage (221046038002) Continuation 2

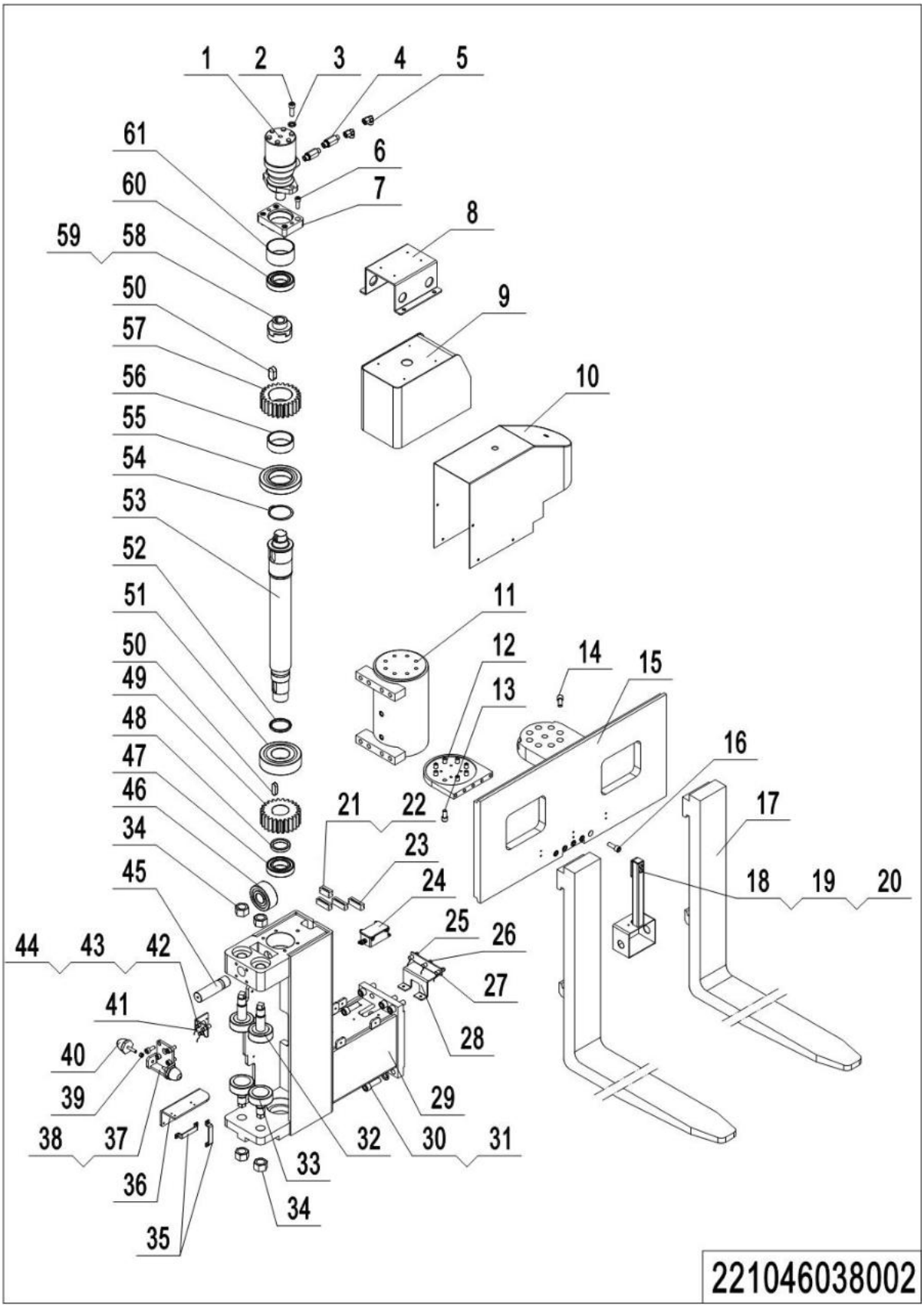

05 Side shift carriage (221046038002) Continuation 2

No.	Item Code	Mark	Item Description	Qty.	Substitute	Note
58	221038010013		Sleeve	1		
59	910600800025		Flat Key	2		
60	910700200048		Bearing	1		
61	221038020050		Sleeve	1		

Chapter 5: Steering System, Braking System, Wheels

01 Steering Wheel(212146031501)

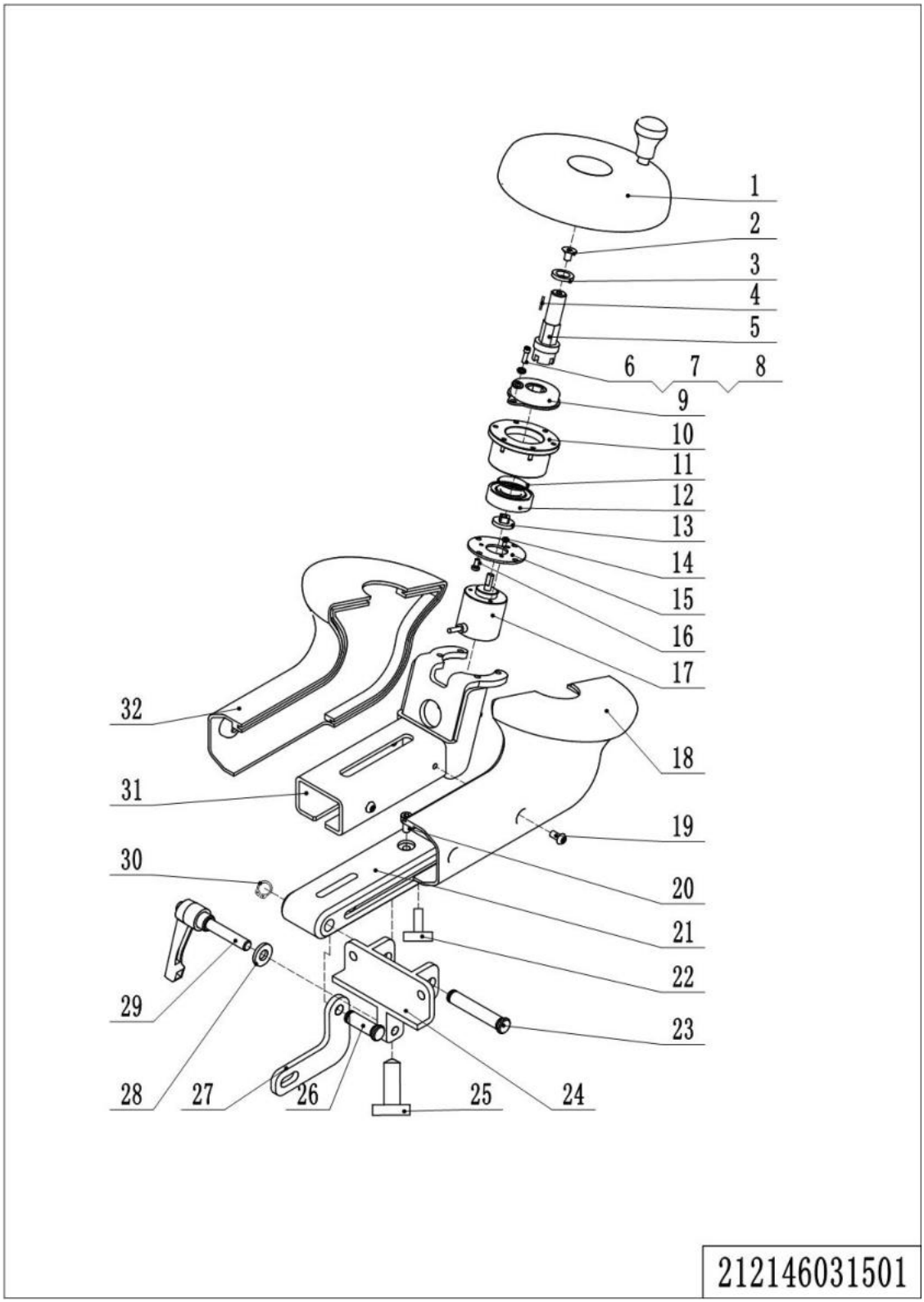

01 Steering Wheel(212146031501)

No.	Item Code	Mark	Item Description	Qty.	Substitute	Note
1	940801700001		Handwheel	1		
2	910200400015	1	Screw	1		
3	212131520006		Washer	1		
4	910600800004		Flat Key	1		
5	212131520005		Axle	1		
6	910200500038	1	Screw	5		
7	910400100004	1	Flat Washer	5		
8	910400500004	1	Spring Washer	5		
9	204010020004		Damper	1		
10	212131520007		Bracket	1		
11	910401400012	1	Circlip	1		
12	910700200004		Bearing	1		
13	505931520002		Link Block	1		
14	910200500009	1	Screw	3		
15	212131520008		Fixing Plate	1		
16	910200500021	1	Screw	4		
17	212131510002		Potentiometer	1		
18	212131520001		Protective Cover	1		
19	910200300017	1	Screw	4		
20	910200200033	1	Screw	1		
21	212131520004		Sliding Block	1		
22	212131520015		Handwheel	1		
23	440517020002		Pin	1		
24	212131510000		Fixing Base	1		
25	212131520015		Handwheel	1		
26	213031540015		Pin	1		
27	212131520003		Fixing Plate	1		
28	212131520002		Washer	1		
29	272031510001		Handle	1		
30	910401300003	1	Circlip	1		

1= Supply as package. 2= Supply with constraints. 3= Phasing-out supply. 4= Supply as assembly. 5= Check other tables.

01 Steering Wheel(212146031501)Continuation

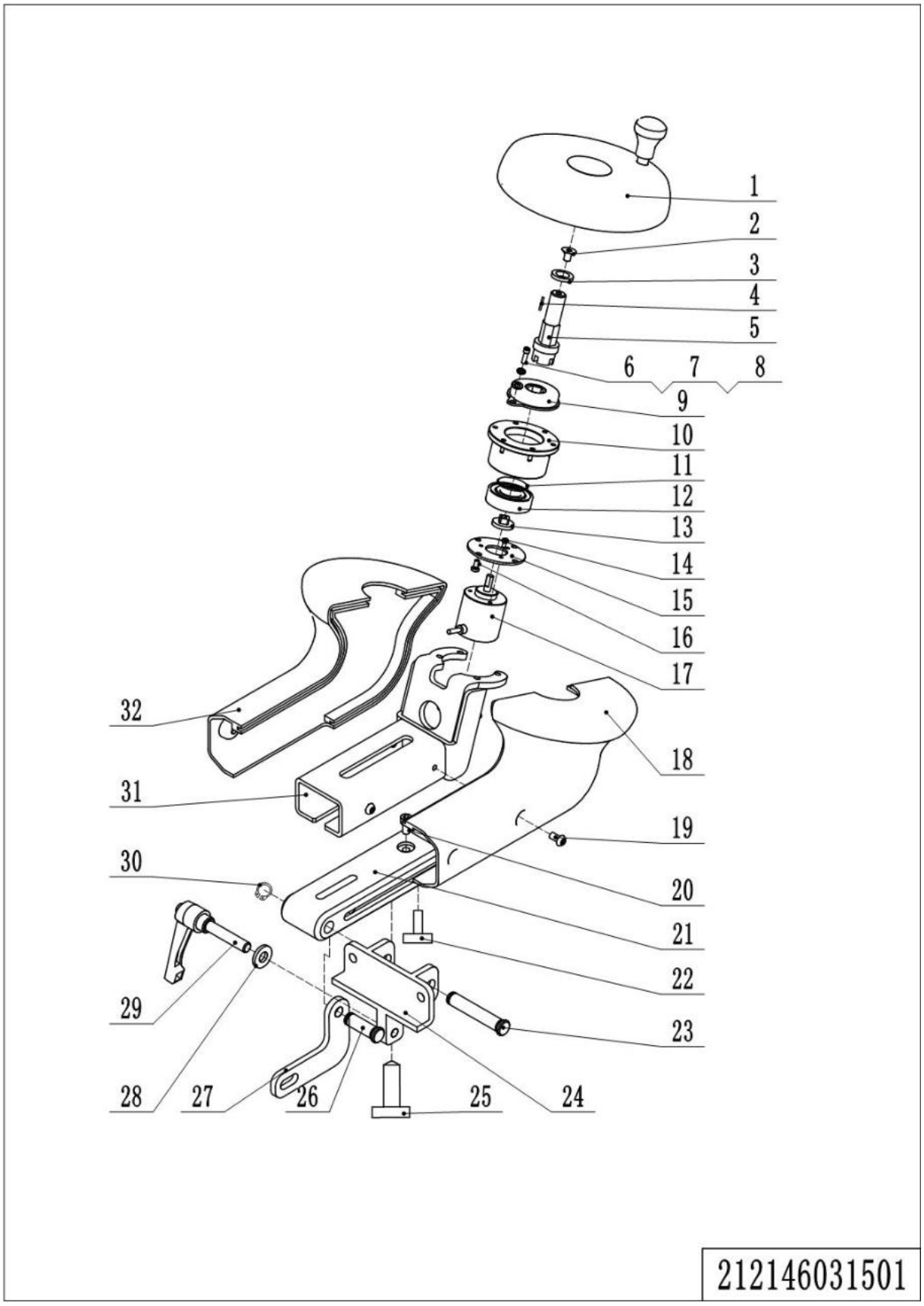

01 Steering Wheel(212146031501)Continuation

No.	Item Code	Mark	Item Description	Qty.	Substitute	Note
31	212131510001		Fixing Base	1		
32	212131520000		Protective Cover	1		

02 Brake Unit (221046011501)

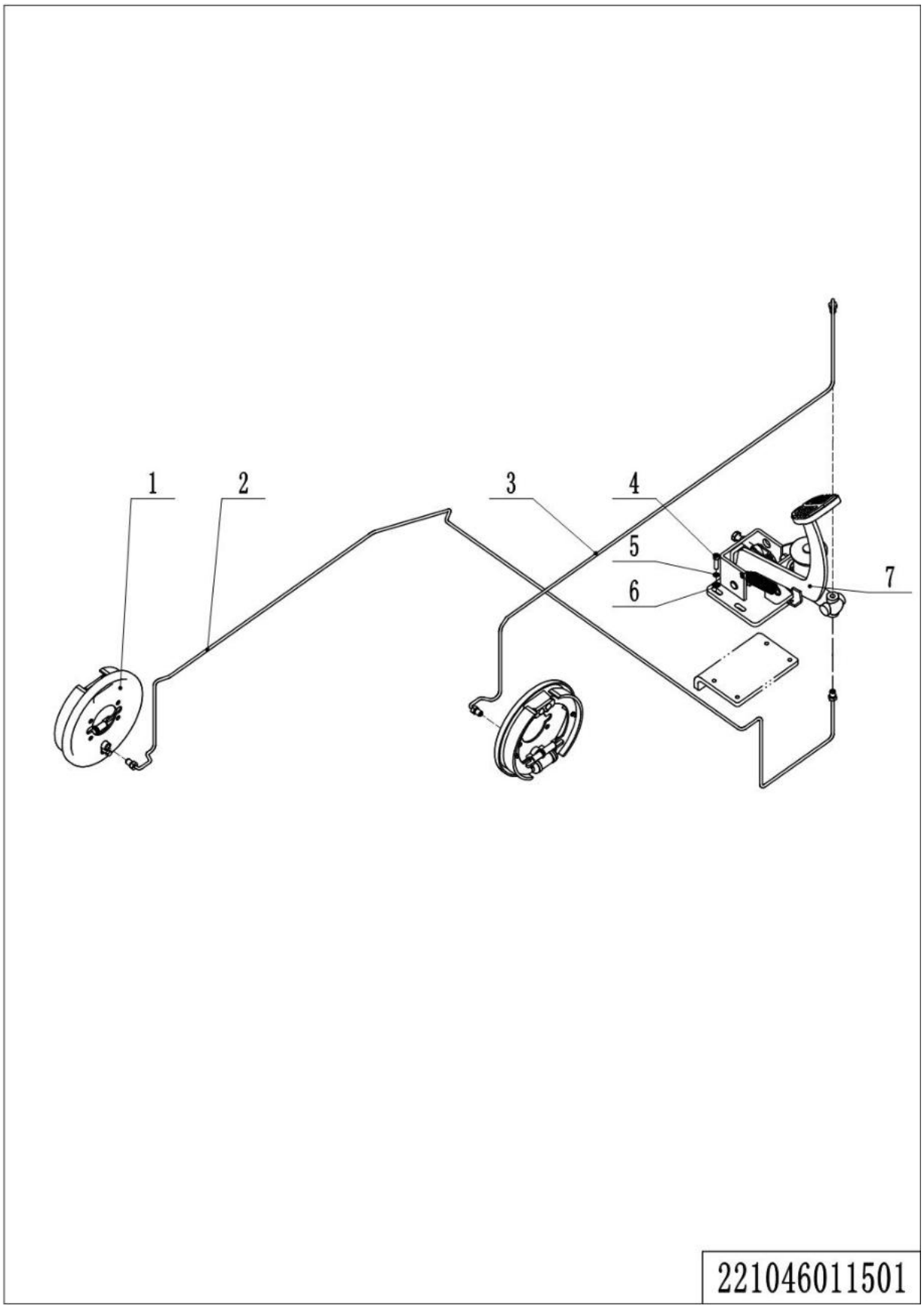

1= Supply as package. 2= Supply with constraints. 3= Phasing-out supply. 4= Supply as assembly. 5= Check other tables.

02 Brake Unit(221046011501)

No.	Item Code	Mark	Item Description	Qty.	Substitute	Note
1	940700200003		Brake	2		
2	221011510000		Steel Tube	1		
3	221011510001		Steel Tube	1		
4	910200200058	1	Screw	4		
5	910400500006	1	Spring Washer	4		
6	910400100006	1	Flat Washer	4		
7	212111510000		Foot Brake Assembly	1		

03 Brake Pedal(212146011502)

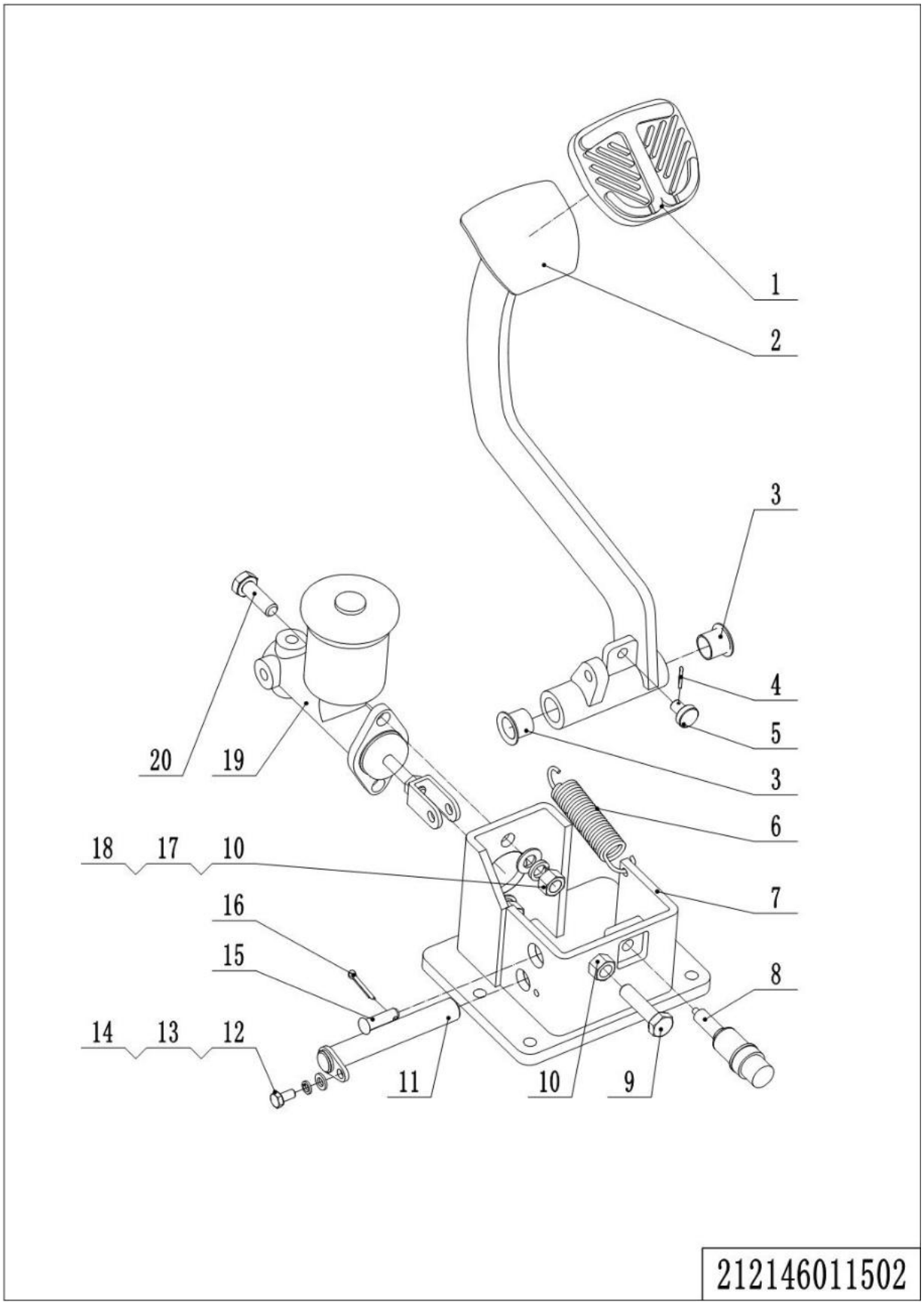

1= Supply as package. 2= Supply with constraints. 3= Phasing-out supply. 4= Supply as assembly. 5= Check other tables.

03 Brake Pedal(212146011502)

No.	Item Code	Mark	Item Description	Qty.	Substitute	Note
1	253511520010		Rubber Mat	1		
2	212111510003		Platform	1		
3	940500200016		Bushing	2		
4	910600600011	1	Cotter Pin	1		
5	251011520015		Crash Pad	1		
6	275211521013		Spring	1		
7	212111510001		Bracket	1		
8	920201000002		Switch	1		
9	910100300039	1	Bolt	1		
10	910300100007	1	Nut	3		
11	212111510002		Pin	1		
12	910400100005	1	Flat Washer	1		
13	910400500005	1	Spring Washer	1		
14	910100300009	1	Bolt	1		
15	910600700026		Pin	1		
16	910600600026	1	Cotter Pin	1		
17	910400100007	1	Flat Washer	2		
18	910400500007	1	Spring Washer	2		
19	212111510006		Brake Pump	1		
20	910100300037	1	Bolt	2		

04 Load Wheel (221046017001)

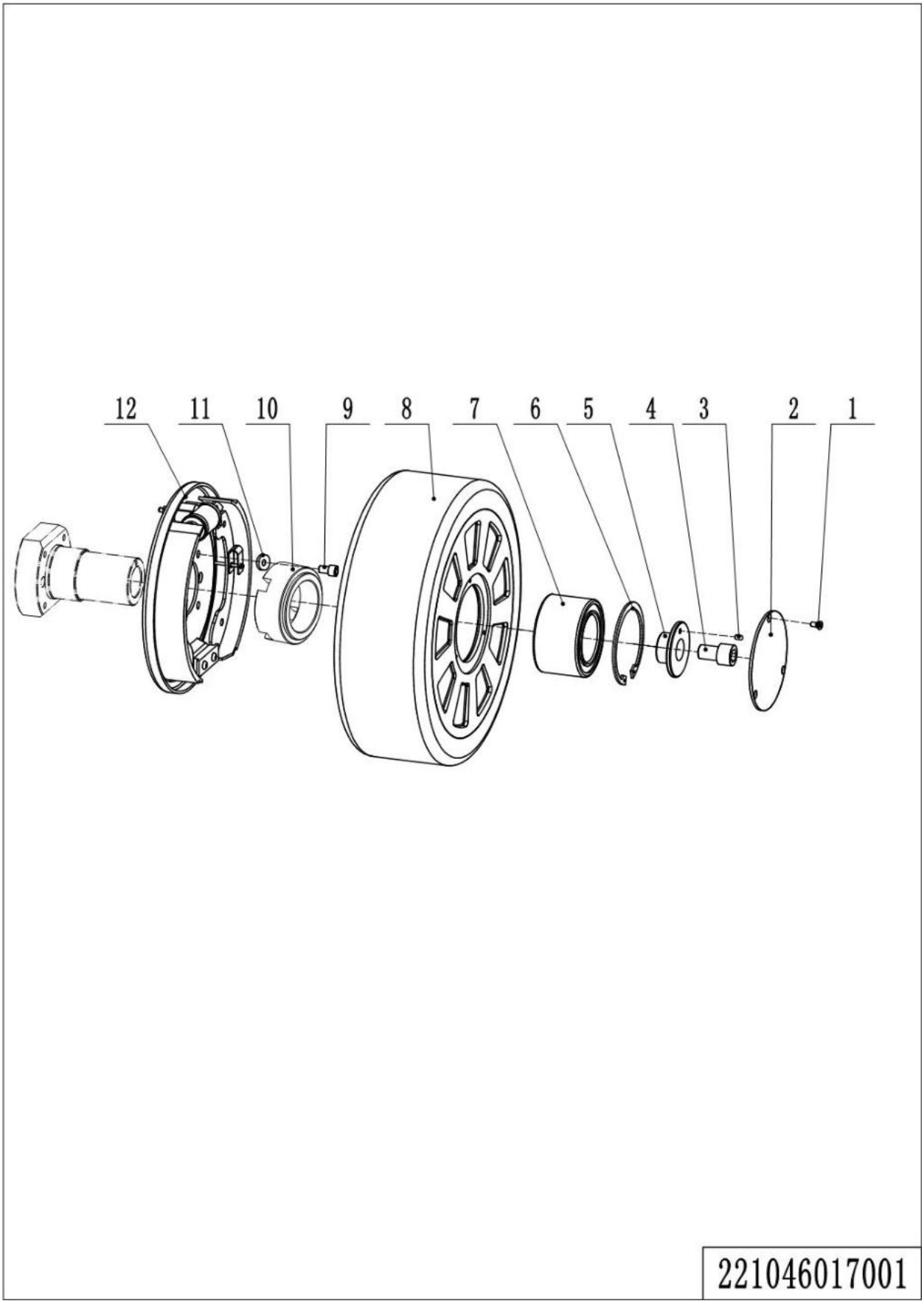

1= Supply as package. 2= Supply with constraints. 3= Phasing-out supply. 4= Supply as assembly. 5= Check other tables.

04 Load Wheel(221046017001)

No.	Item Code	Mark	Item Description	Qty.	Substitute	Note
1	910200600016	1	Screw	3		
2	221017020000		Close Plate	1		
3	910600100009	1	Cylindrical Pin	1		
4	910202500001	1	Screw	1		
5	221017020002		Gland	1		
6	910401400026	1	Circlip	1		
7	941101000007		Bearing	1		
8	940300300039		Wheel	1		
9	910100300022	1	Bolt	4		
10	221017020001		Spacer Bush	1		
11	910400100006	1	Flat Washer	4		
12	940700200003		Brake	2		

1= Supply as package. 2= Supply with constraints. 3= Phasing-out supply. 4= Supply as assembly. 5= Check other tables.

Chapter 6: Electrical Parts

01 Wire Harness (221046033001)

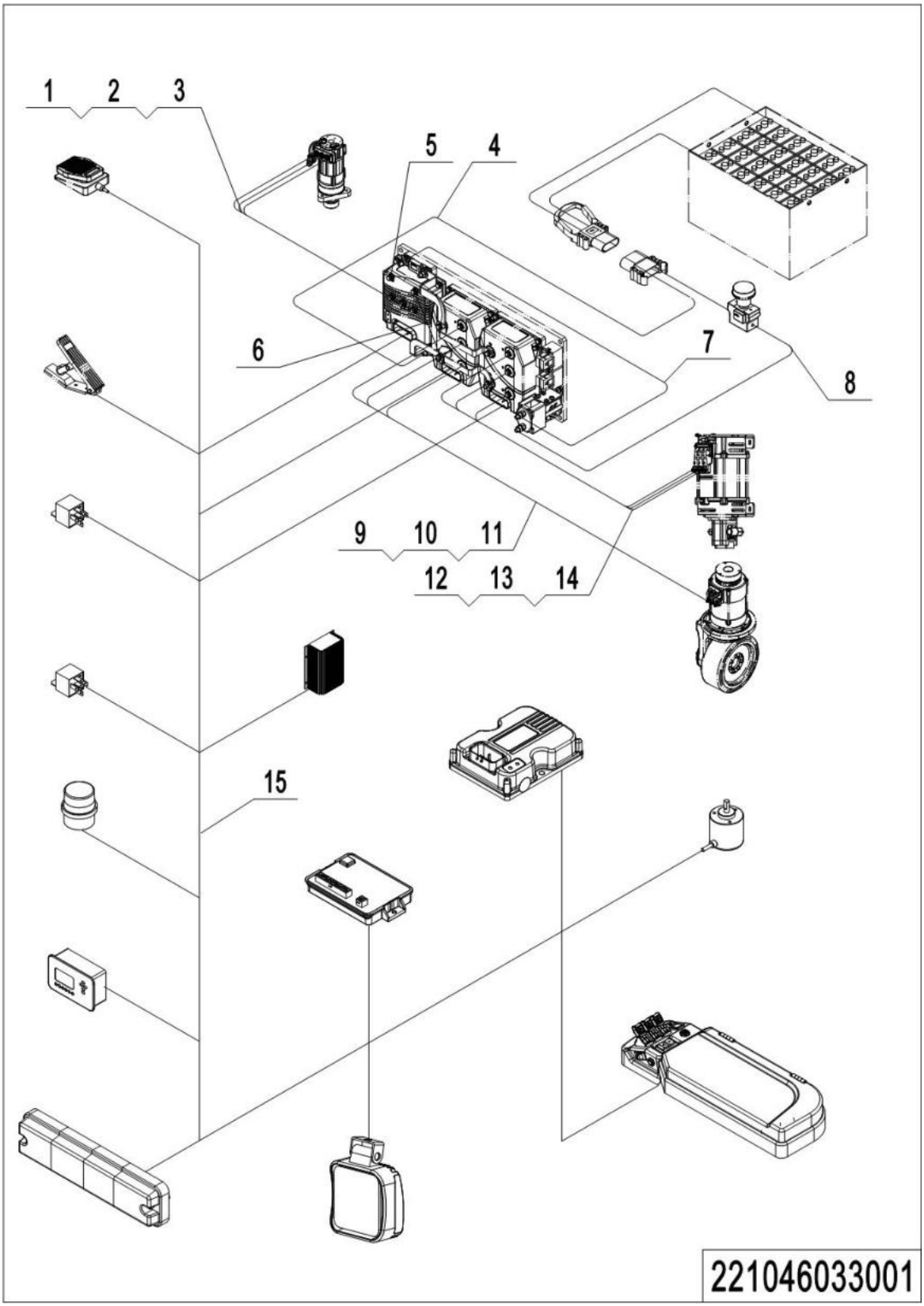

1= Supply as package. 2= Supply with constraints. 3= Phasing-out supply. 4= Supply as assembly. 5= Check other tables.

01 Wire Harness(221046033001)

No.	Item Code	Mark	Item Description	Qty.	Substitute	Note
1	221033010013		Cables	1		
2	221033010014		Cables	1		
3	221033010015		Cables	1		
4	221033010006		Wire Harness	1		
5	213033010018		Cable	1		
6	213033010019		Cable	1		
7	221033010017		Cables	1		
8	221033010016		Cables	1		
9	221033010007		Cables	1		
10	221033010008		Cables	1		
11	221033010009		Cables	1		
12	221033010010		Cables	1		
13	221033010011		Cables	1		
14	221033010012		Cables	1		
15	221033010000		Wire Harness	1		

02 Controller(221046033002)

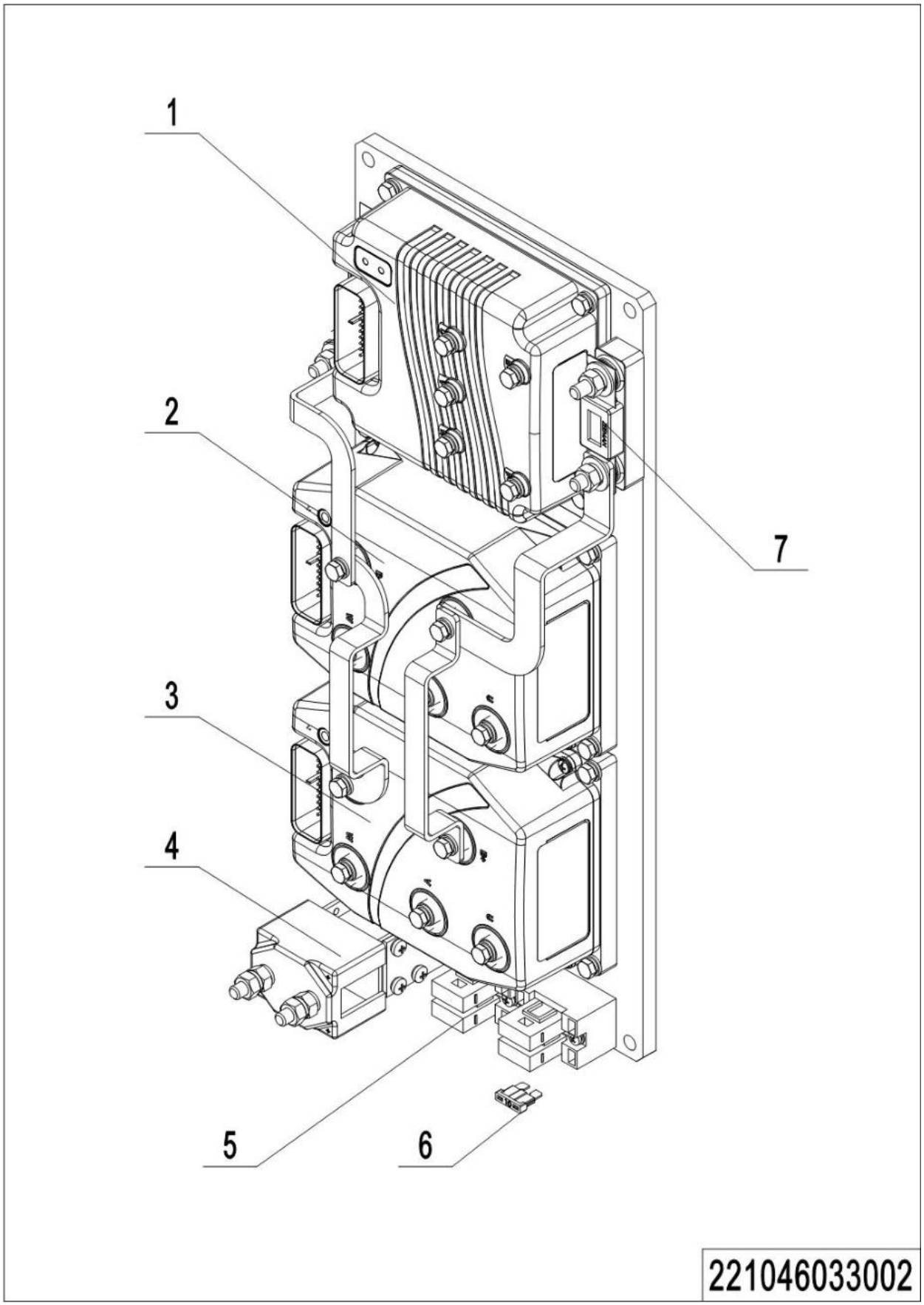

1= Supply as package. 2= Supply with constraints. 3= Phasing-out supply. 4= Supply as assembly. 5= Check other tables.

02 Controller(221046033002)

No.	Item Code	Mark	Item Description	Qty.	Substitute	Note
1	921400100004		Controller	1		
2	921400100043		Controller	1		
3	921400100042		Controller	1		
4	920700100008		Contactor	1		
5	920100400004		Fuse Holder	1		
6	920100200002		Fuse	4		
7	921400100043		Controller	1		

03 Charger(221046036501)

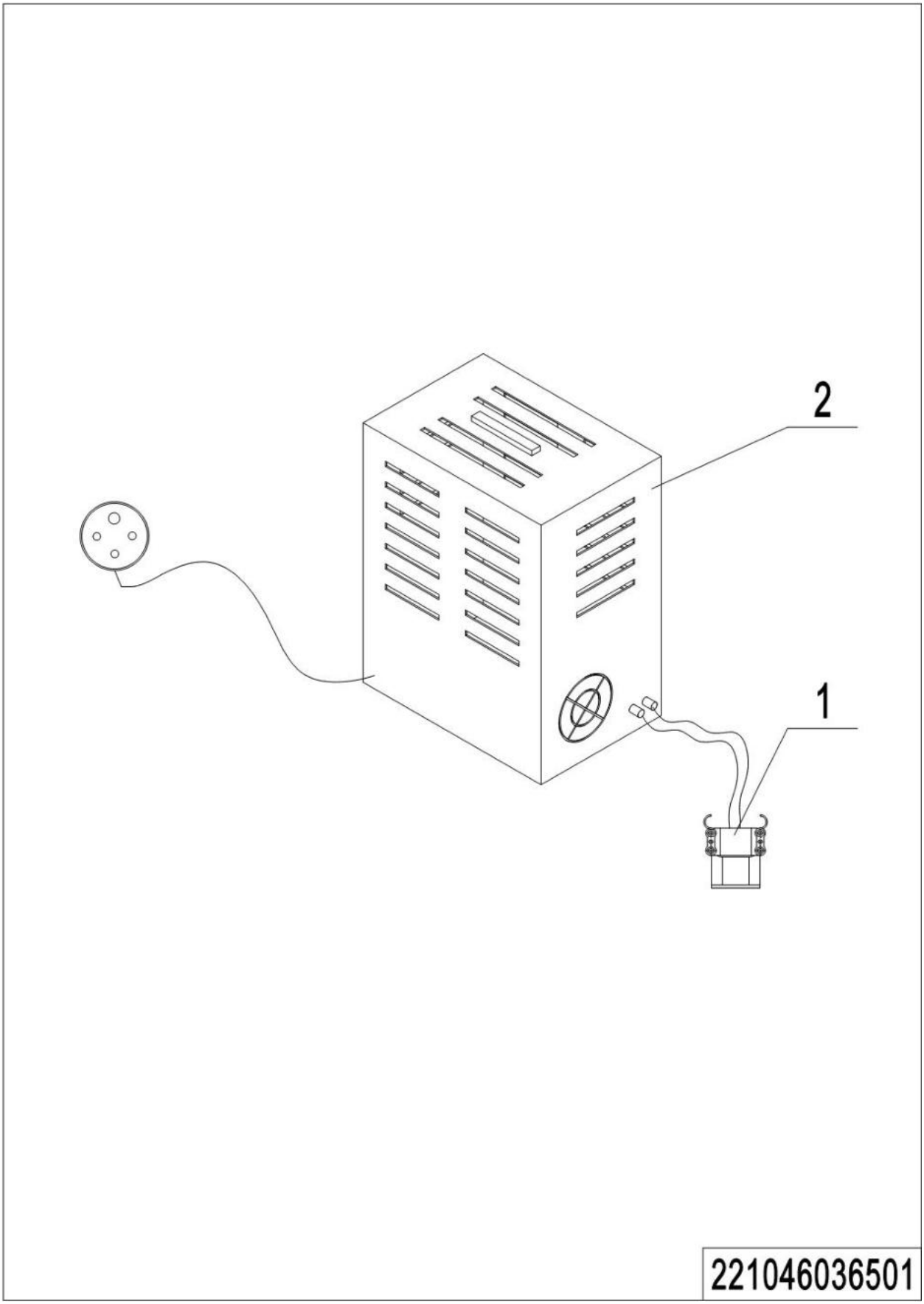

1= Supply as package. 2= Supply with constraints. 3= Phasing-out supply. 4= Supply as assembly. 5= Check other tables.

03 Charger(221046036501)

No.	Item Code	Mark	Item Description	Qty.	Substitute	Note
1	920400100033		Connector	1		Lead Acid
1	920400100037		Connector	1		Lithium
2	921000200545		Charger48V/120A(Aisa-CHN)	1		Lead Acid
2	921000200643		Charger48V/120A(Aisa-ENG)	1		Lead Acid
2	921000200644		Charger48V/120A(Aisa-ENG)	1		Lead Acid
2	921000200645		Charger48V/120A(Aisa-ENG)	1		Lead Acid
2	921000200646		Charger48V/120A(Aisa-ENG)	1		Lead Acid
2	921000200647		Charger48V/120A(Aisa-ENG)	1		Lead Acid
2	921000200701		Charger48V/200A(USA)	1		Lithium

Chapter 7: Special Parts

01 Battery Holder (221046012501)

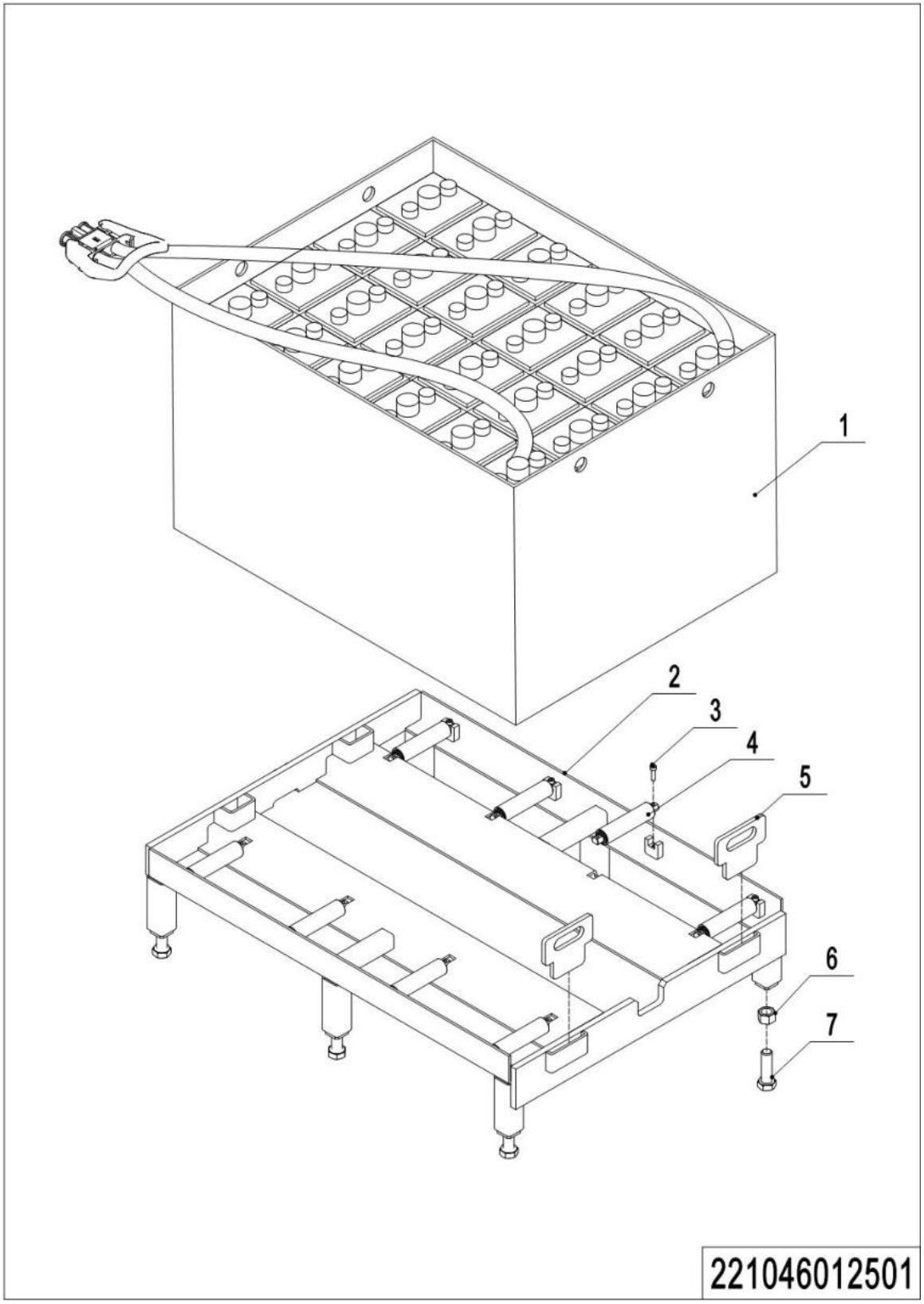

1= Supply as package. 2= Supply with constraints. 3= Phasing-out supply. 4= Supply as assembly. 5= Check other tables.

01 Battery Holder(221046012501)

No.	Item Code	Mark	Item Description	Qty.	Substitute	Note
1	221037010000		Battery48V900Ah(welded)	1		
1	221037010001		Battery48V900Ah	1		
1	920600100363		Li Battery48V600Ah	1		
1	920600100364		Li Battery48V600Ah	1		
2	221012510000		Mounting Rack	1		
3	910200200059	1	Screw	16		
4	212112510011		Roller	16		
5	212112520013		Baffle	2		
6	910300100018	1	Nut	6		
7	910100300090	1	Bolt	6		

02 Monitor (221046036001)

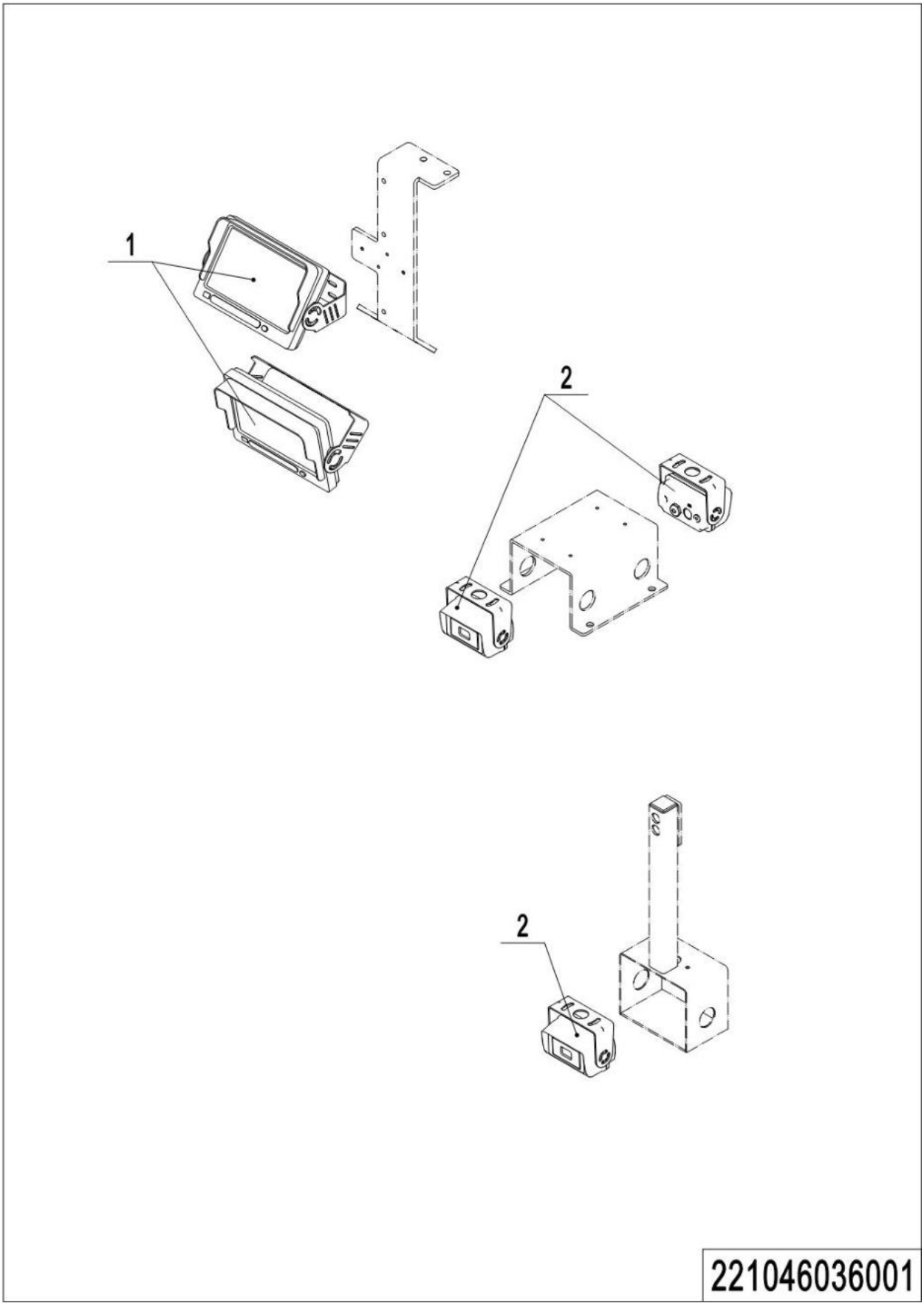

1= Supply as package. 2= Supply with constraints. 3= Phasing-out supply. 4= Supply as assembly. 5= Check other tables.

02 Monitor(221046036001)

No.	Item Code	Mark	Item Description	Qty.	Substitute	Note
1	921100100111		Display	2		
2	921100100112		Camera	3		

03 Height Preselection System (221046066501)

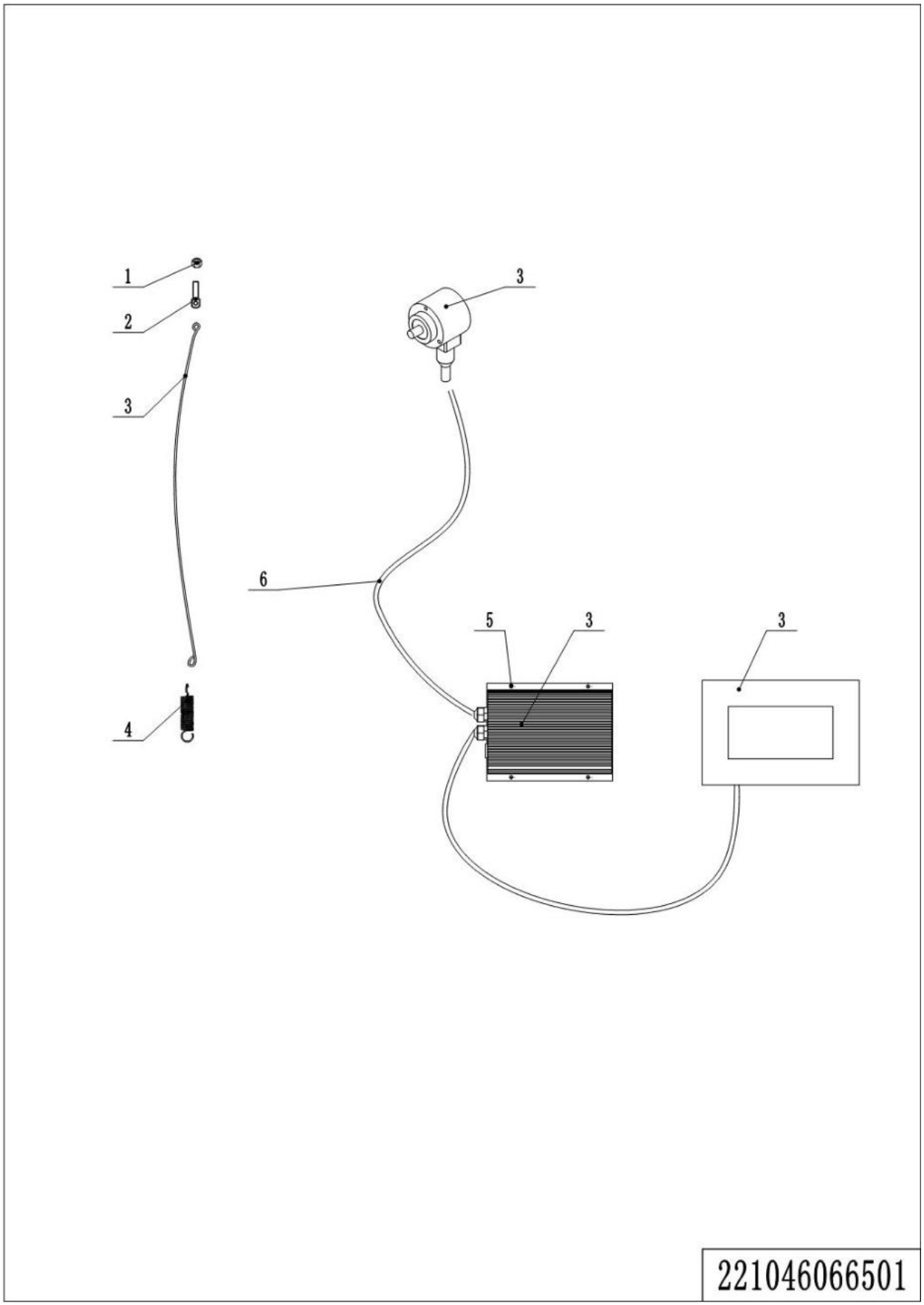

1= Supply as package. 2= Supply with constraints. 3= Phasing-out supply. 4= Supply as assembly. 5= Check other tables.

03 Height Preselection System(221046066501)

No.	Item Code	Mark	Item Description	Qty.	Substitute	Note
1	910300100005		Nut	1		
2	212166520001		Screw	1		
3	922200100021		Height Preselection System	1		
4	213012520006		Spring	1		
5	910200200033		Screw	4		
6	221033010100		Wire Harness	1		6500,
6	221033010101		Wire Harness	1		7500
6	221033010102		Wire Harness	1		8500
6	221033010103		Wire Harness	1		9500

Chapter 8: Others

01 Control Panel(221046010001)

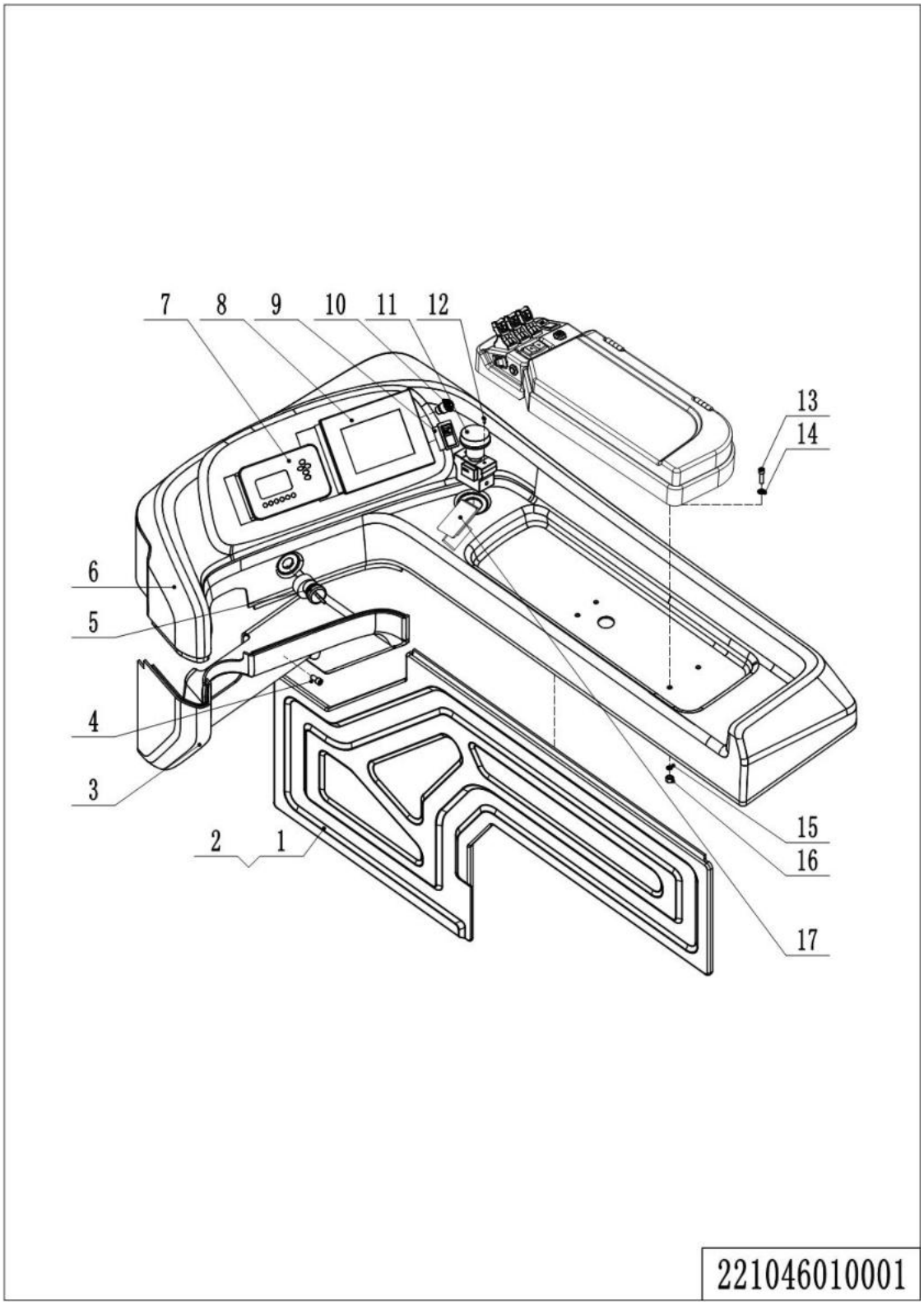

1= Supply as package. 2= Supply with constraints. 3= Phasing-out supply. 4= Supply as assembly. 5= Check other tables.

01 Control Panel(221046010001)

No.	Item Code	Mark	Item Description	Qty.	Substitute	Note
1	212110020025		Side Plate	1		
2	910200500052	1	Screw	10		
3	212110020001		Close Plate	1		
4	910200300017	1	Screw	1		
5	920200200002		Key Switch	1		
6	212110020026		Protective Cover	1		
6	212110020026		Protective Cover	1		
6	212110020030		Protective Cover	1		Height Preselection
7	921100100011		Display	1		
8	922200100021		Height Preselection System	1		
9	920200800009		Rocker Switch	1		
10	212133510012		Button	1		
11	920200100005		Emergency Button	1		
12	910200300013	1	Screw	2		
13	910200200036	1	Screw	4		
14	910400100005	1	Flat Washer	4		
15	910400500005	1	Spring Washer	4		
16	910300100005	1	Nut	4		
17			Password lock	1		

1= Supply as package. 2= Supply with constraints. 3= Phasing-out supply. 4= Supply as assembly. 5= Check other tables.

02 Integrated Control Console(212146010002)

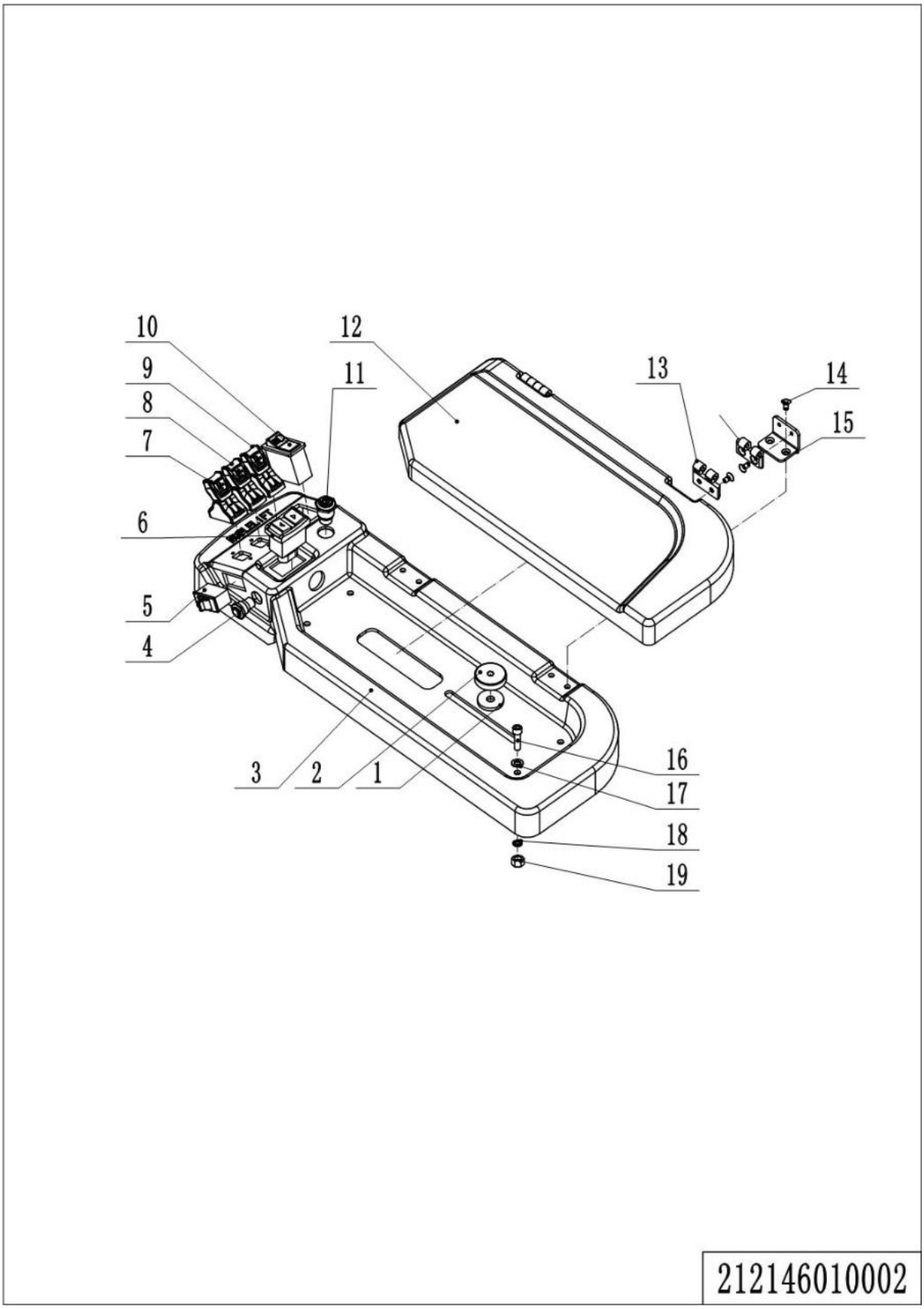

1= Supply as package. 2= Supply with constraints. 3= Phasing-out supply. 4= Supply as assembly. 5= Check other tables.

02 Integrated Control Console(212146010002)

No.	Item Code	Mark	Item Description	Qty.	Substitute	Note
1	212110020010		Washer	1		
2	212110020028		Handle	1		
3	212110020003		Protective Cover	1		
4	920200700003		Switch	1		
5	212133510017		Switch	1		Shift FW./ BW.
6	920200800018		Rocker Switch	1		
7	212133510014		Switch	1		Lift/ Lower
8	212133510015		Switch	1		Move FW./ BW.
9	212133510016		Switch	1		Tilt Up/ Down
10	920200800008		Rocker Switch	1		
11	212133510013		Button	1		
12	212110010000		Cover	1		
13	940801300003		Hinge	2		
14	910200600016	1	Screw	12		
15	212110020004		Fixing Plate	2		
16	910200200036	1	Screw	4		
17	910400100005	1	Flat Washer	4		
18	910400500005	1	Spring Washer	4		
19	910300100005	1	Nut	4		

03 Adjustable Console Support(212146010003)

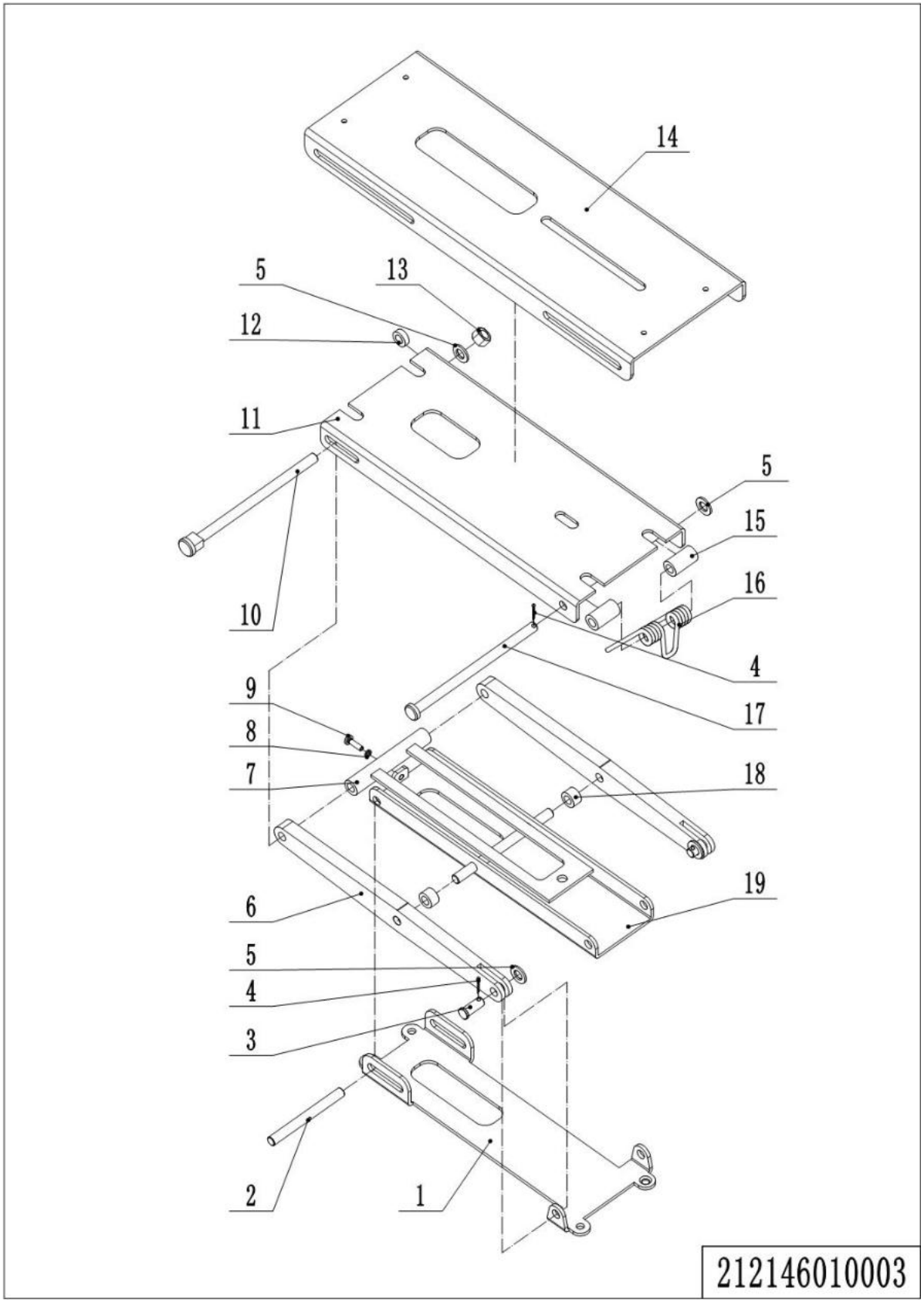

1= Supply as package. 2= Supply with constraints. 3= Phasing-out supply. 4= Supply as assembly. 5= Check other tables.

03 Adjustable Console Support(212146010003)

No.	Item Code	Mark	Item Description	Qty.	Substitute	Note
1	212110020012		Baseboard	1		
2	212110020008		Axle	1		
3	212110020016		Pin	2		
4	910600600026	1	Cotter Pin	3		
5	910400100006	1	Flat Washer	4		
6	212110020011		Fork Plate(outer)	2		
7	212110010001		Bracket	1		
8	910400500003	1	Spring Washer	1		
9	910200500022	1	Screw	1		
10	212110020007		Axle	1		
11	212110020006		Sliding Plate	1		
12	212110020009		Spacer Bush	1		
13	910300500004	1	Nut	1		
14	212110020005		Bracket	1		
15	212110020013		Spacer Bush	2		
16	212110020027		Torsional Spring	1		
17	212110020014		Pin	1		
18	212110020015		Spacer Bush	2		
19	212110010002		Fork Plate(inner)	1		

04 Labels and Decals(221046047001)

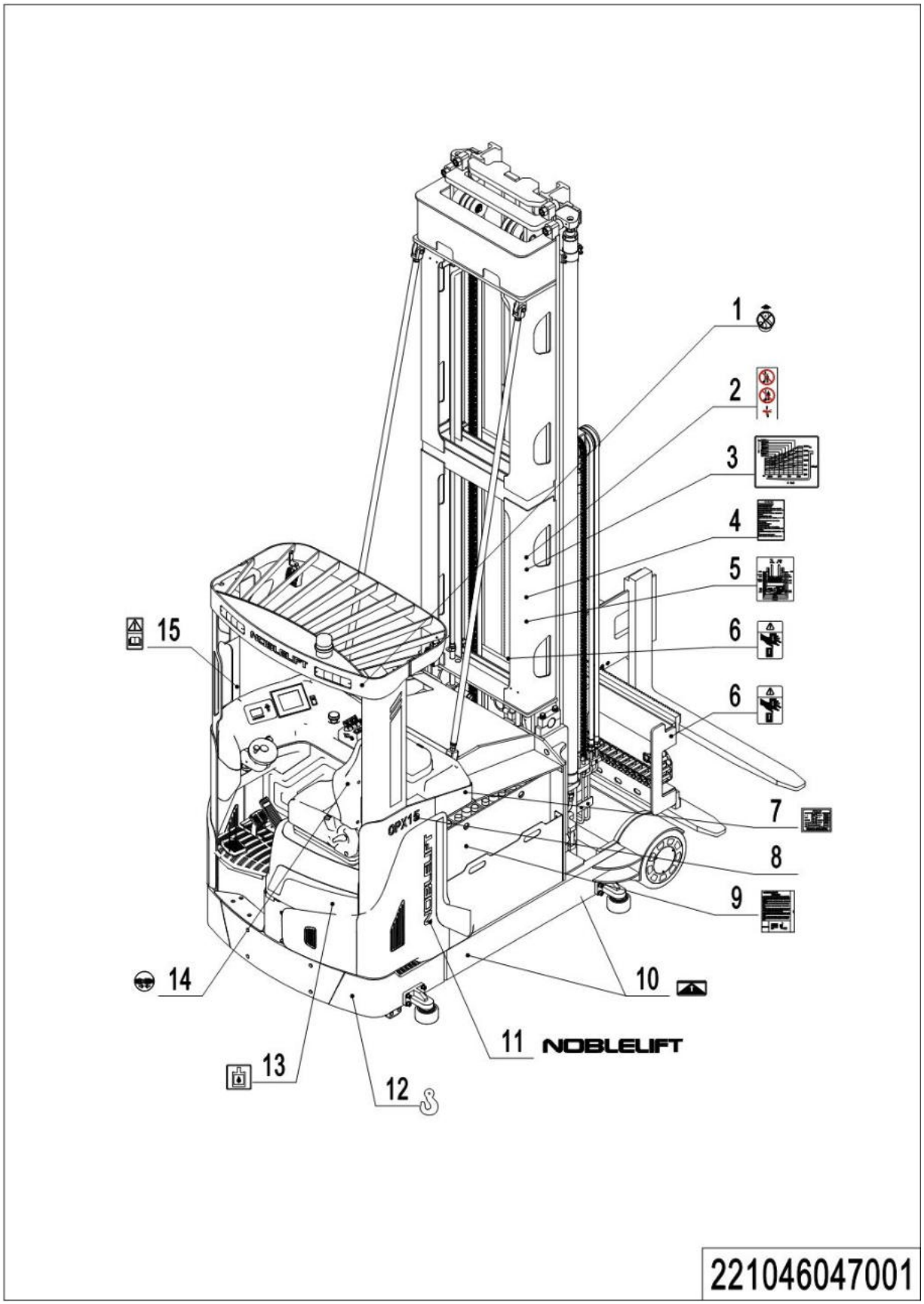

1= Supply as package. 2= Supply with constraints. 3= Phasing-out supply. 4= Supply as assembly. 5= Check other tables.

04 Labels and Decals (213346047001)

No.	Item Code	Mark	Item Description	Qty.	Substitute	Note
1	941200100025		Label	2		
2	941200100004		Label	2		
3	212147020016		Load Capacity Diagram	2		
4	212147020012		Label	1		
5	212147020010		Label,Lubrication	1		
6	941200100027		Label	3		
7	941200600003		Identification Plate	1		
8	221047020001		Truck data plate	1		
9	212147020011		Label	1		
10	255047020023		Label	2		
11	212147020006		Label	1		
12	941200300001		Label	2		
13	255047020004		Label	1		
14	255047020012		Label	1		
15	941200300011		Label	1		

Appendix

01 Electrical Circuit Diagram

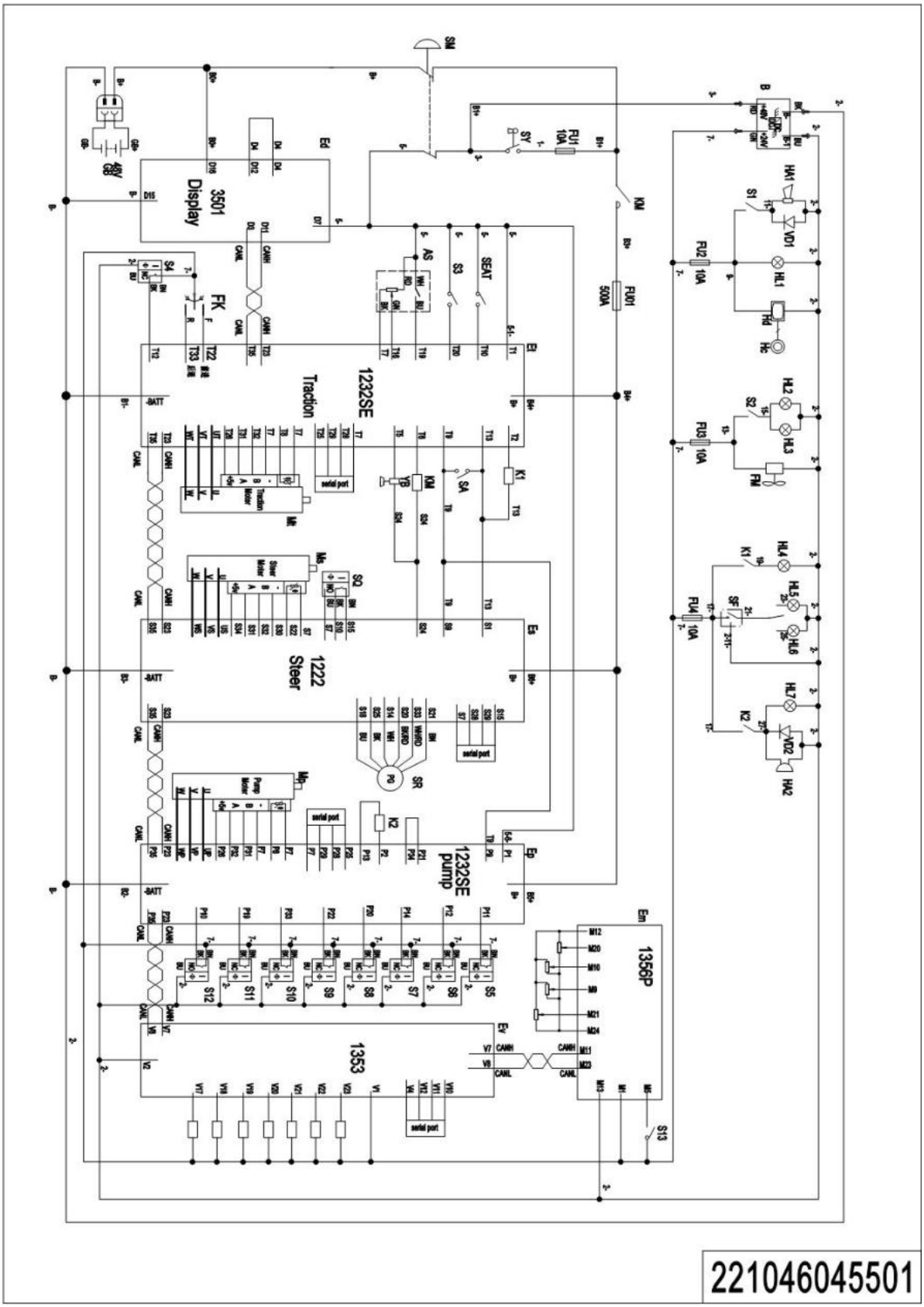

02 Hydraulic Circuit Diagram

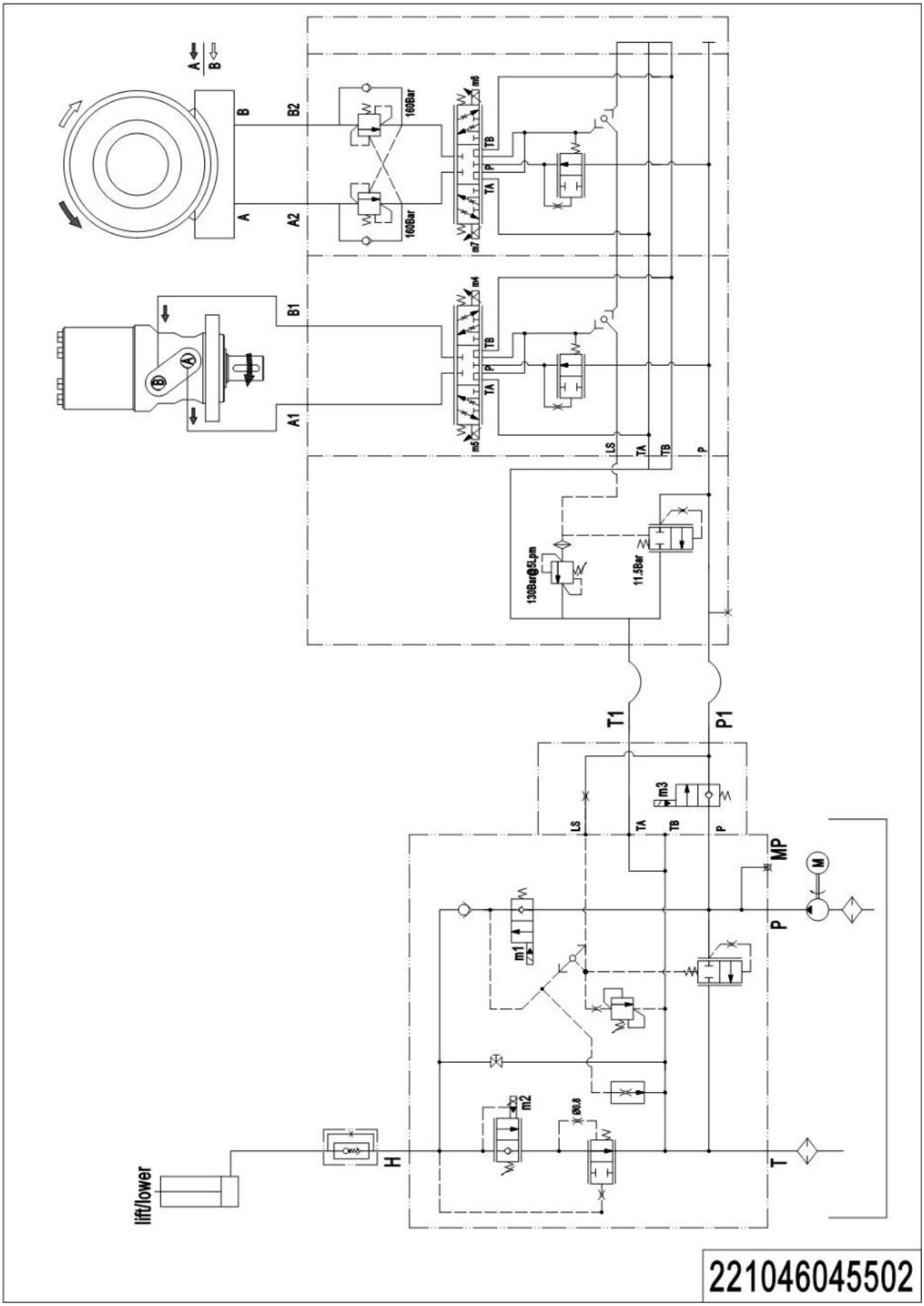

03 Consumable Parts List

No.	Item Code	Item Description	Qty.	Chapter/ Section/ Number
1	940300400043	WheelΦ400x160	1	Chapter 1/01/20
2	940300300040	Wheel	4	Chapter 3/01/45
3	212121520048	Gas Spring	1	Chapter 3/01/58
4	940200300055	Compound Roller	6	Chapter 4/01/2Chapter 4/04/9
5	213398520001	Seal Kit	2	Chapter 4/01/9.01
6	910800100017	O-Ring	1	Chapter 4/01/29
7	910700200019	Bearing	8	Chapter 4/02/5
8	940200300054	Compound Roller	6	Chapter 4/02/14Chapter 4/03/25
9	940200100045	Main Roller	4	Chapter 4/02/24Chapter 4/03/23
10	213398520001	Seal Kit	2	Chapter 4/03/16.01
11	910700200004	Bearing	1	Chapter 5/01/12
12	940500200016	Bushing	2	Chapter 5/03/3
13	941101000007	Bearing	1	Chapter 5/04/7
14	940300300039	Wheel	1	Chapter 5/04/8
15	920100200002	Fuse	4	Chapter 6/02/6
16	910700200019	Bearing	1	Chapter 7/01/10

1= Supply as package. 2= Supply with constraints. 3= Phasing-out supply. 4= Supply as assembly. 5= Check other tables.