Operation Manual

Electric Stand-Up Counterbalanced Lift Truck

CBT15

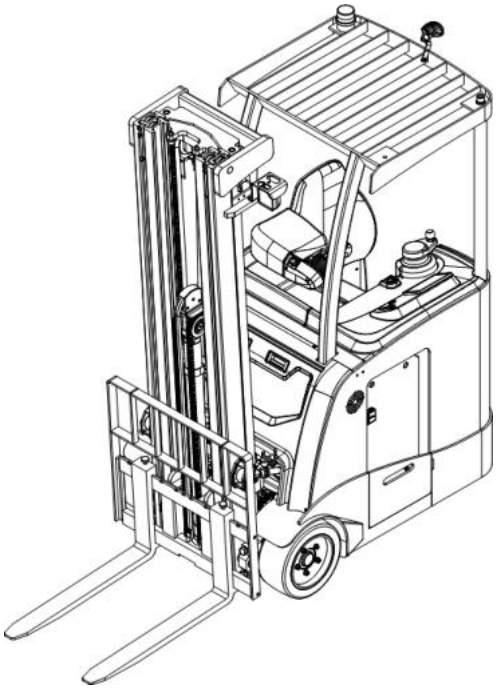

WARNING

Do not use the electric stand-up counterbalanced lift truck before reading and understanding these operating instructions.

NOTE:

- **Please check the designation of your present type at the last page of this document as well as on the ID-plate.**
- **Keep it for future reference.**

This truck can only be used in the factory, tourist attractions and amusement areas.

Version 11/2023

CBT15-SMS-001-CHN

Introduction

Before operating this forklift, please read this operator's manual carefully and fully understand the use of this vehicle, improper operation may cause danger.

This manual describes the usage methods of different types of battery forklifts. When operating and repairing forklifts, please confirm that this manual matches your company's model.

Keep it safe for future use and contact your local dealer for a replacement if this manual or caution/warning label is damaged or missing.

This forklift truck complies with the requirements of EN 3691-1 (Industrial Vehicles - Safety Requirements and Verification, Part 1), EN 12895 (Industrial Vehicles - Electromagnetic Compatibility), EN 12053 (Safe Industrial Vehicles - Test Methods for the Measurement of Noise Emissions), and EN 1175-1 (Safety of Industrial Vehicles - Requirements for Electrical Performance), and must be used in accordance with the above purposes.
According to EN 12053, the driver's ear noise level is 68 dB(A).

Note:

- Hazardous waste that is harmful to the environment, such as waste batteries, waste oil, and electronic products, can have negative impacts on the ecological environment or human health if not properly handled.

- Waste packaging should be placed in solid waste bins according to material classification, and collected and processed by the local specialized environmental protection bureau. To avoid pollution, littering is prohibited.

- To avoid oil leakage when using the product, users should prepare some absorbent materials (waste wood chips or dry rags) to absorb the leaked oil in a timely manner. To avoid secondary environmental pollution, absorbable materials that have been used should be handed over to specialized departments in accordance with local authority regulations.

- Please understand that our products are subject to continuous improvement, and since this manual is intended for the operation/maintenance of the forklift only, it does not guarantee any special conditions that may occur in addition to those described herein.

Attention: in this manual, symbol represents a warning and dangerous situation that may result in death or serious injury if not followed.

Copyright

Copyright is reserved by the companies mentioned on the CE standard at the end of this document.

Contents

1. CORRECT APPLICATION 4
2. TRUCK DESCRIPTION 5
   a. Overview of Main Components 5
   b. Main technical parameters 6
   c. Description of safety devices and warning labels 9
   d. Frame number position 11
   e. Identification plate (ID-plate) 12
3. WARNINGS, RESIDUAL RISK AND SAFETY INSTRUCTIONS 13
4. COMMISSIONING, TRANSPORTING, DECOMMISSIONING 14
   a. Commissioning 14
   b. Hoisting/transportation 14
   c. Storage/shutdown 15
5. REGULAR INSPECTION 15
6. OPERATION INSTRUCTIONS 17
   a. Arrangement of operation control device 17
   b. Vehicle power-on 17
   c. Drive 17
   d. Steering 18
   e. Braking 18
   f. Load curve diagram 19
   g. Lifting 19
   h. Lowering 20
   i. Fork shift left and right (optional) 20
   j. Gantry tilt 20
   k. Faulty 20
   l. Emergency 20
7. BATTERY CHANGES AND REPLACEMENT 21
   a. Battery replacement 22
   b. Power display and power alarm 22
   c. Charging 23
   d. Description of lithium-ion batteries 23
   e. Lithium battery label 24
   f. Safety instructions, warning signs and other precautions 25
8. REGULAR MAINTENANCE 31
   a. Maintenance list 31
   b. Lubricating point 34
   c. Check and refill the hydraulic oil 34
   d. Check the electrical fuse (added by electrical personnel) 35
9. TROUBLE SHOOTING 36
10. WIRING/CIRCUIT DIAGRAM 37

11. HYDRAULIC DIAGRAM 39
12. BRAKE SCHEMATIC DIAGRAM 41
13. SELF-DIAGNOSIS AND TROUBLESHOOTING 42

1. CORRECT APPLICATION

To ensure personal and equipment safety, drivers should follow the following precautions:
1. Drivers who have received training and hold a forklift driver's license are allowed to drive;
2. This forklift is suitable for use on hard and flat indoor floors;
3. Check all control and alarm devices before driving. If any damage or defects are found, they should be repaired before operation;
4. During transportation, the load should not exceed the specified value. The forks must be fully inserted under the goods and the goods should be evenly placed on the forks. Unbalanced loading is prohibited, and the use of a single fork tip to lift objects is not allowed;
5. Start, turn, drive, brake, and stop slowly and steadily, and slow down when turning on damp or smooth roads;
6. When driving with a load, the goods should be lowered as much as possible and the forks should be tilted backwards;
7. Be careful when driving on slopes: move forward when going uphill, move backward when going downhill, and avoid turning when going uphill or downhill;
8. When driving, pay attention to pedestrians, obstacles, and bumpy roads, and pay attention to the space above the forklift;
9. Personnel are not allowed to stand on forks and vehicles;
10. Personnel are not allowed to stand or walk under the raised part of the forklift;
11. It is only allowed to operate the vehicle from the driver's position;
12. Do not handle goods that are not fixed or loosely stacked, be careful when handling larger sized goods;
13. When working inside the shelf, the forklift should move slowly, straight in and straight out. When the fork is not completely removed from the shelf, it is prohibited to turn to avoid collision with the shelf;
14. For high lift forklifts, try to tilt the gantry backwards during operation. Loading and unloading operations should be tilted forward and backward within the minimum range;
15. When a forklift malfunctions, it should be immediately stopped from use and labeled with a sign;
16. When leaving the forklift, lower the fork to the ground, park the forklift on a level surface, turn off the power, and remove the key.

Use of this battery forklift is permitted only in accordance with this instruction manual.

The rated load is indicated on the load label and nameplate, and the operator must pay attention to these warning signs and safety instructions.

Operating lighting must reach a minimum of 50 lux.

<u>Changes</u>

Any changes or alterations that may affect the rated load, stability, or safe operation of the vehicle must be approved in writing by the original manufacturer of the vehicle, its authorized manufacturer, or its successor in advance.

This includes the effects of changes, such as increased braking, steering, visibility, and movable accessories.

After the manufacturer or its successor approves the modification or change, the capacity nameplate, label, identification mark, operation and maintenance manual must be modified accordingly.

Vehicle damage caused by not following these instructions will result in invalidation of warranty terms.

2. TRUCK DESCRIPTION

a. Overview of Main Components

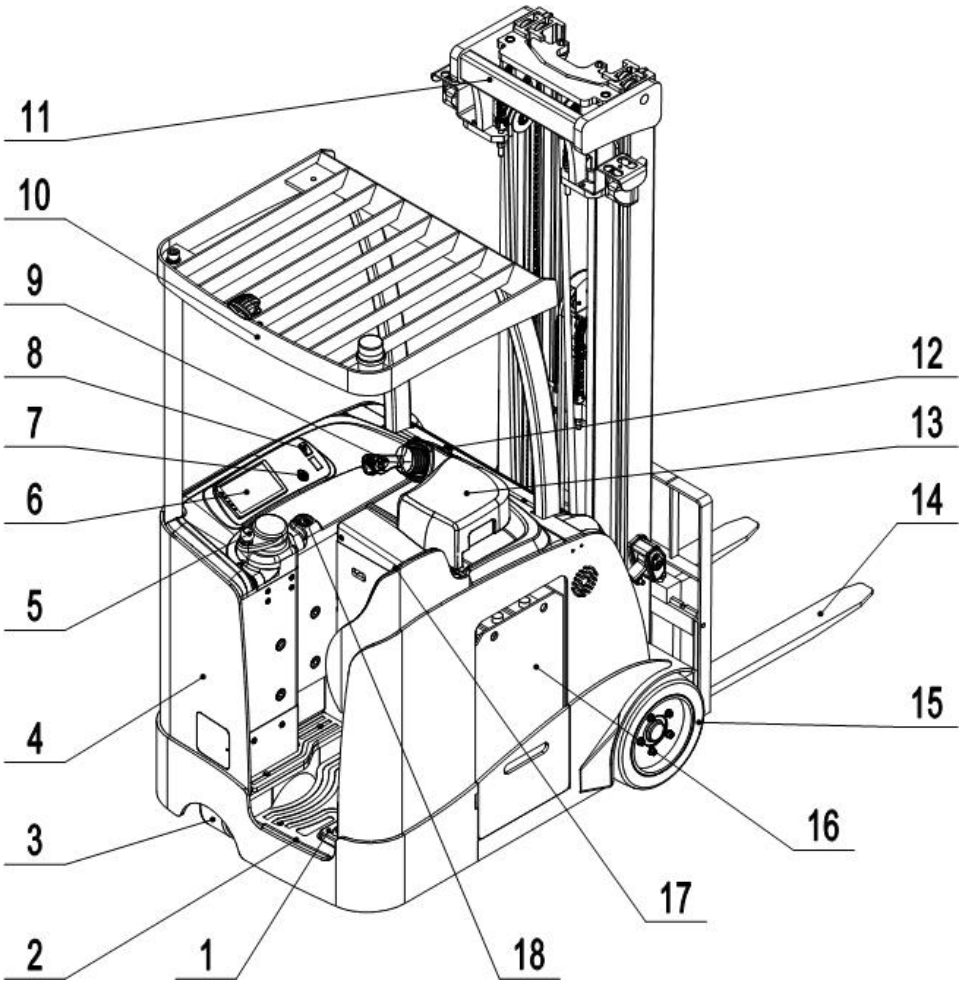

Figure 1: Overview of Main Components

1. Dual safety pedals
2. Entrance fence
3. Steering wheel
4. Frame
5. Steering control
6. Display screen
7. USB power supply
8. Lighting button
9. Multi-function handle
10. Overhead guard
11. Gantry
12. Emergency stop switch
13. handrail
14. Fork
15. Driving wheel
16. Battery
17. Backrest assembly
18. Key switch

b. Main technical parameters

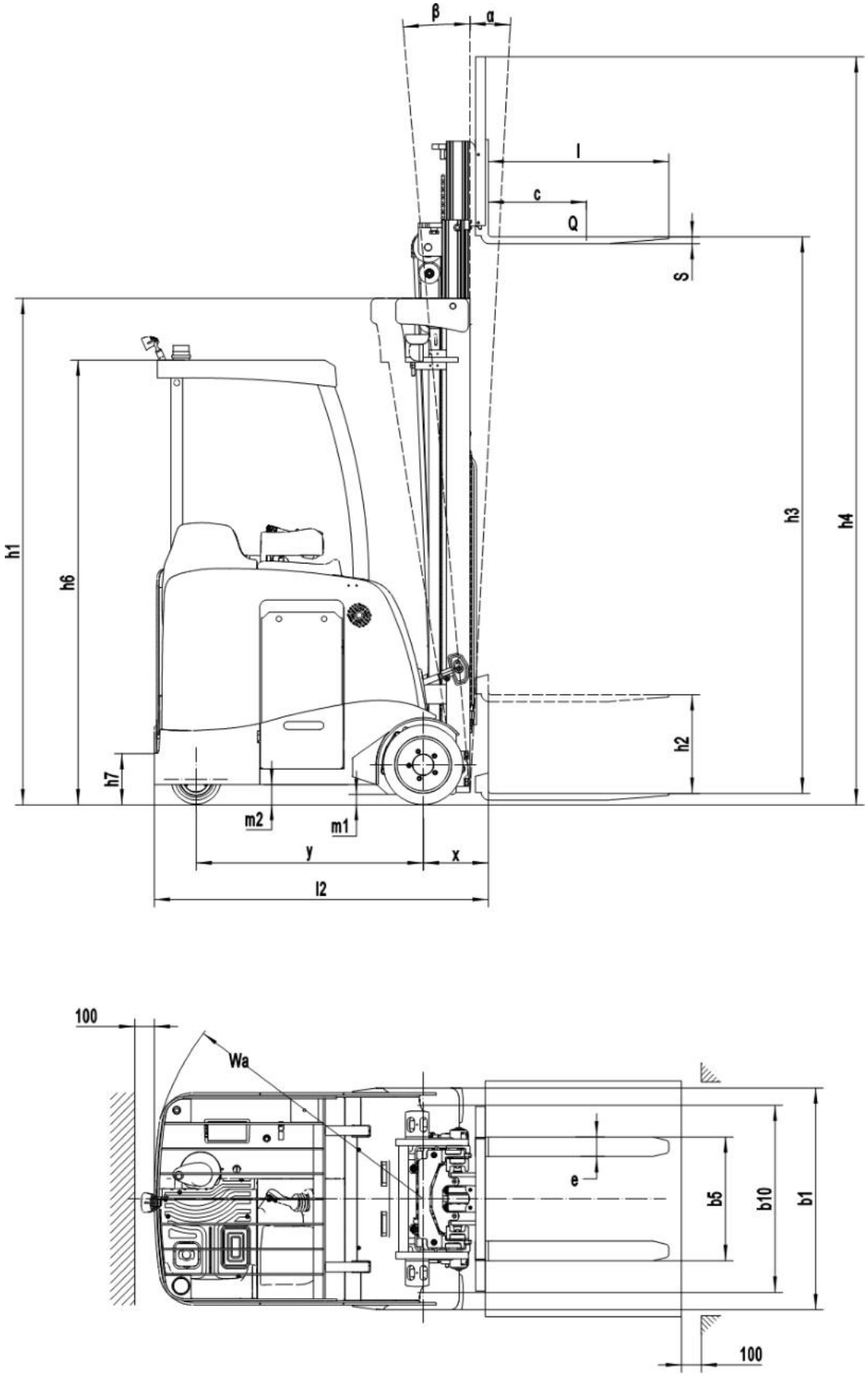

Figure 2: Structural diagram

Table 1: Main technical parameters of the standard version

Characteristics	1.2	Model		CBT15
	1.3	Power		Battery
	1.4	Driving style		Standing driving style
	1.5	Rated load	Q (t)	1.5
	1.6	Load centre distance	c (mm)	500
	1.8	Front overhang	x (mm)	330
	1.9	Axle distance	y (mm)	1158
Weight	2.1	Self-weight (including battery)	kg	4150
Vehicle wheel	3.1	Tire		Press-on solid tire
	3.2	Wheel size, load wheel	∅xW (mm)	∅ 406x178x267
	3.3	Wheel size, steering wheel	∅xW (mm)	Ø 254x127x165
	3.5	Number of wheels (x=driving wheels) Drive side/support side		2x / 2
	3.6	Wheelbase (load wheel side)	b10 (mm)	952
	3.7	Wheelbase (steering wheel side)	b11 (mm)	171
Basic size	4.1	The inclination angle of the gantry (front/rear)	α/β (°)	3.5/5
	4.2	Gantry retracting height	h1(mm)	2575
	4.3	Free lifting height	h2(mm)	2050
	4.4	Maximum lifting height	h3(mm)	6200
	4.5	Maximum height of gantry during operation	h4(mm)	7116
	4.7	Overhead guard height	h6(mm)	2260
	4.8	Platform height	h7(mm)	260
	4.20	Length to the vertical face of the fork	l2 (mm)	1700
	4.21	Width of vehicle body	b1 (mm)	1130
	4.22	Fork dimensions	s/e/l (mm)	35/100/920
	4.25	Fork external spacing (min/max)	b5 (mm)	200-860
	4.31	Ground clearance	m1(mm)	50
	4.32	Ground clearance	m2(mm)	100
	4.33	The passage-width is 1000×1200 (1200 for cross fork placement)	Ast (mm)	3060
	4.34	The passage width is 800×1200 (1200 is placed along the fork)	Ast (mm)	3185
	4.35	Turning radius	Wa (mm)	1406
Performance	5.1	Driving speed Full load/empty load	km/h	11/11
	5.2	Lifting speed Full load/empty load	m/s	0.32/0.45
	5.3	Descending speed Full load/empty load	m/s	0.43/0.40

	5.8	maximum gradeability Full load/empty load	%	10/15
	5.10	Service braking		Electromagnetic braking
		Park braking		Electromagnetic braking
Electric motor	6.1	Drive motor power S2 60 min	kW	2x5.5
	6.2	Lifting motor power S3 15%	kW	11
	6.3	Maximum battery size		410x980x785
	6.4	Battery voltage, rated capacity K5	V/ Ah	36/700
	6.5	Battery weight	kg	900
Other	8.1	Drive control mode		AC
	8.4	Driver's ear noise level according to EN12053 standard	dB(A)	68

Mast table

Specifications and models	Lifting height h_3(mm)	Free lifting height h_2 (mm)	Lowered mast height h_1 (mm)	Extended mast height h4 (mm)
Three stage mast FFL (Full-Free-Lift)	4000	1315	1840	4916
	5260	1735	2260	6176
	5720	1890	2415	6636
	6200	2050	2575	7116

C. Description of safety devices and warning labels

Warning labels:

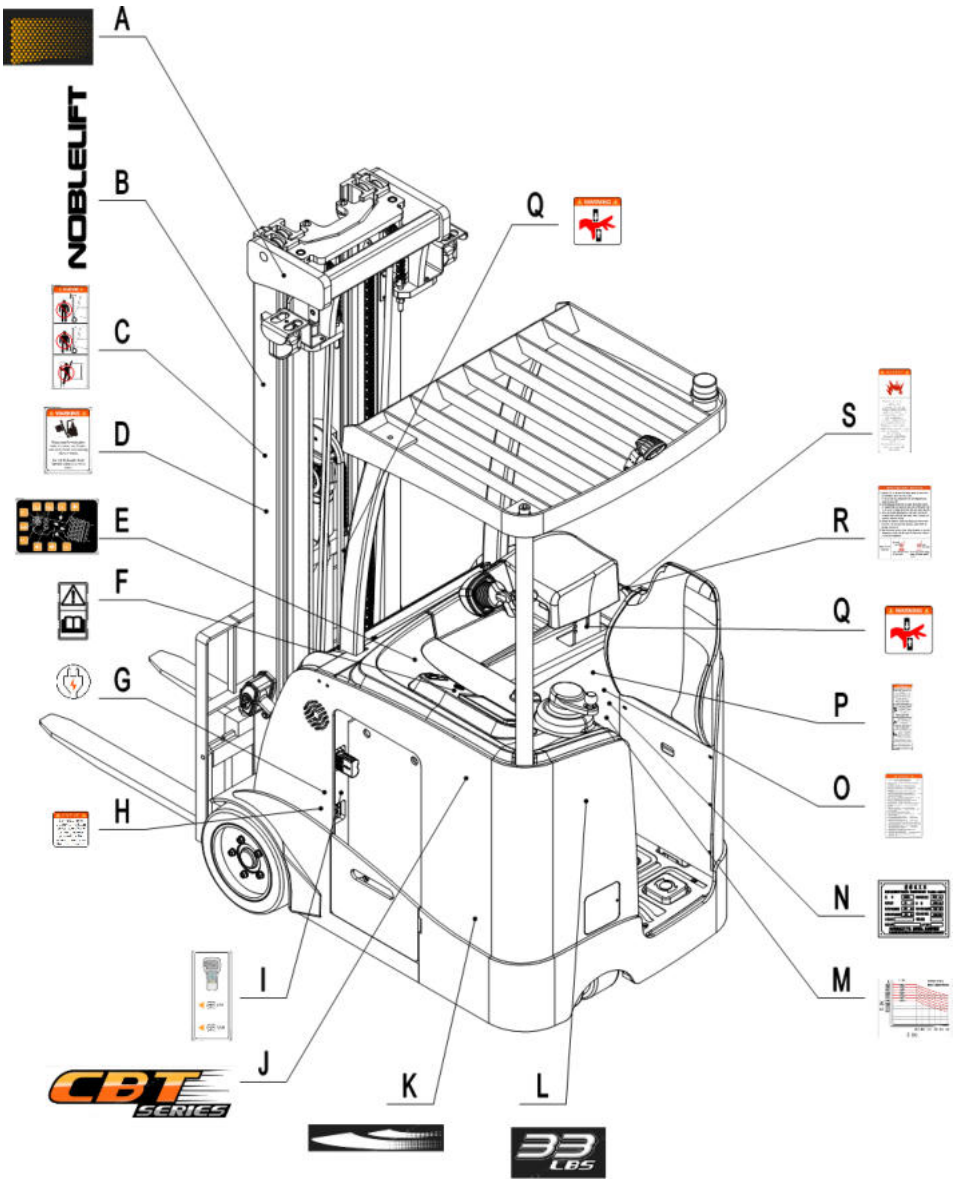

Figure 3: Warning labels

A. Warning reflective film: A reflective warning film with yellow spots,
used to draw attention to the highest point of the gantry.
B. Trademark.
C. Warning label: Do not stand under or on the fork.
D. Warning label: Indicating that the forklift cannot tilt forward when lifting the load.
E. Tip label: Schematic diagram of handle use.
F. Tip label: Please read the instructions.
G. Tip label: Schematic diagram of charging port.
H. Tip label: Precautions for standardized charging.
I. Tip label: Schematic diagram of electrical debugging port.
J. Auxiliary label: Indicating the model of this forklift.
K. Auxiliary label: Decorative stripes.
L. Auxiliary label: Indicating the rated load of this forklift.
M. Load curve
N. Nameplate: Indicating the basic information of the forklift, such as specifications, production date, product number, etc.
O. Warning label: Indicating driving precautions for the vehicle.
P. Warning label: Indicating driving precautions for the vehicle.
Q. Warning label: Indicating attention to preventing hand pinching.
R. Tip label: Notes on the use of battery specifications
S. Tip label: Notes on the use of battery specifications

Safety device

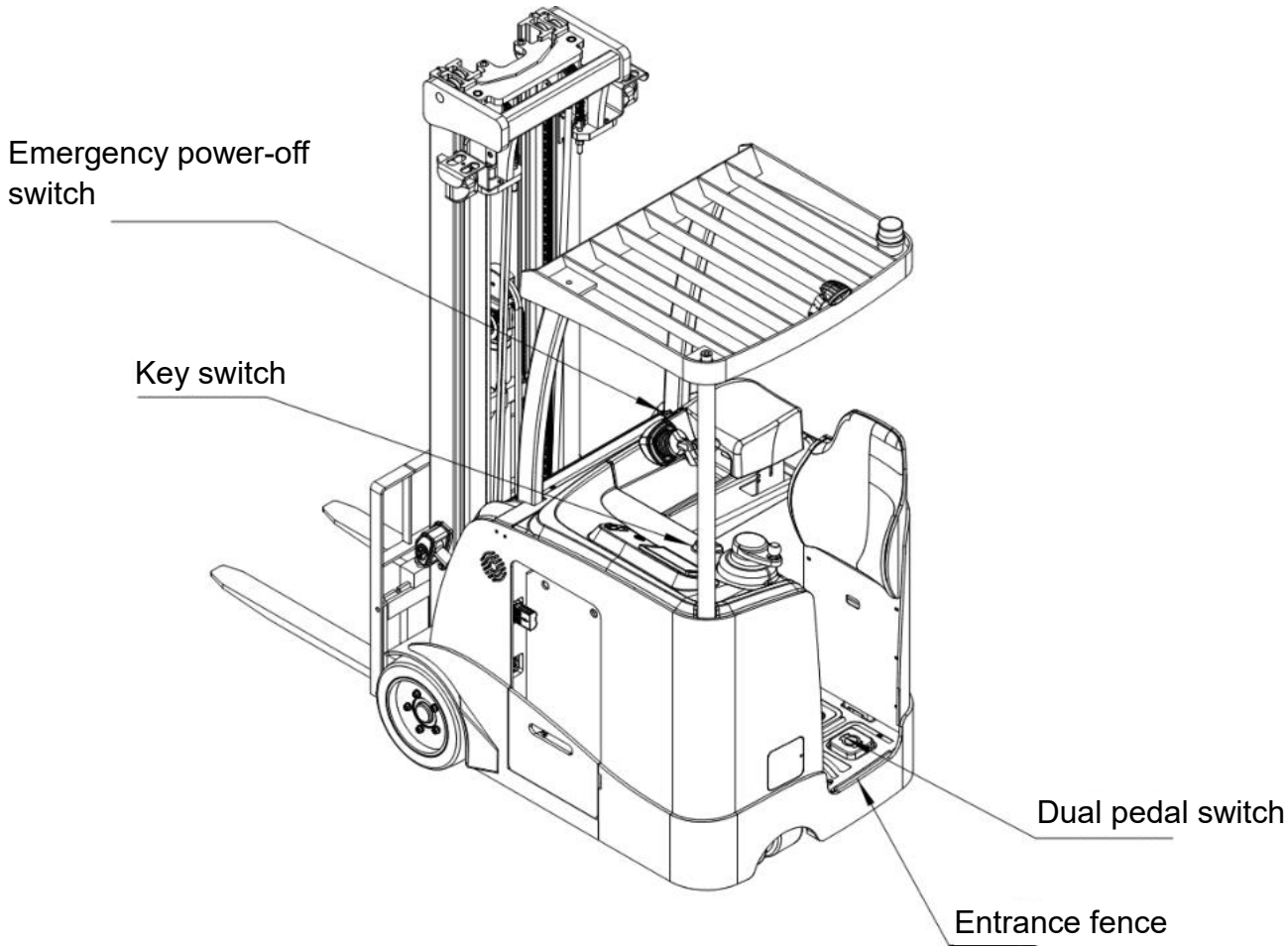

Figure 4: Safety device

Emergency power-off switch: When the forklift loses control, please immediately press this switch to cut off the power supply of the entire vehicle. This can stop all lifting, lowering, vehicle forward, backward, and gantry activities.

Key switch: If you do not operate this forklift, in order to prevent unauthorized personnel from using it, you need to rotate the key counterclockwise and remove it.

Entrance fence: This device can avoid the risk caused by the foot sticking out of the operation area. When the foot is accidentally placed in the entrance fence, the forklift starts to slow down until it stops.

Foot switch: The forklift must be operated with the operator's foot on the foot switch, otherwise the forklift will not operate properly.

Note: The safety devices of this forklift include emergency power-off switch, key switch, entrance fence, foot switch, and hydraulic pipeline explosion-proof valve. The above safety devices and labels must be maintained in good condition at all times and replaced promptly if damaged or missing.

d. Frame number position

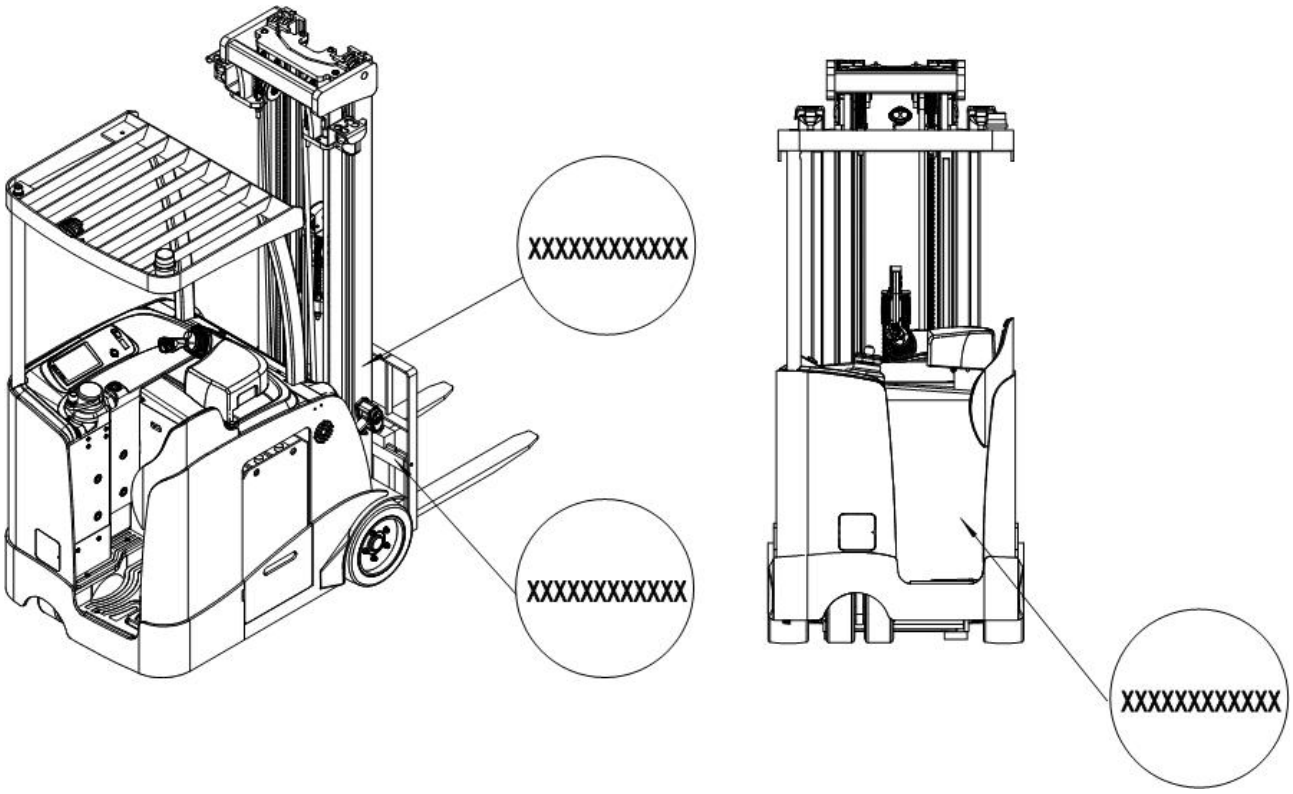

Figure 5: Diagram of frame number location

The frame number is located on the vehicle's body, gantry, and fork frame. Vehicles equipped with hook type forks also have corresponding frame numbers on the forks.

e. Identification plate (ID-plate)

1	Designation, type	7	Battery weight Min./Max in kg
2	Serial number	8	Nominal power in kW
3	Rated capacity in kg	9	Load center distance in mm
4	Supply voltage in V	10	Manufacturing date (MM/YY)
5	Net weight in kg (without battery)	11	Option
6	Name and address of manufacturer)		

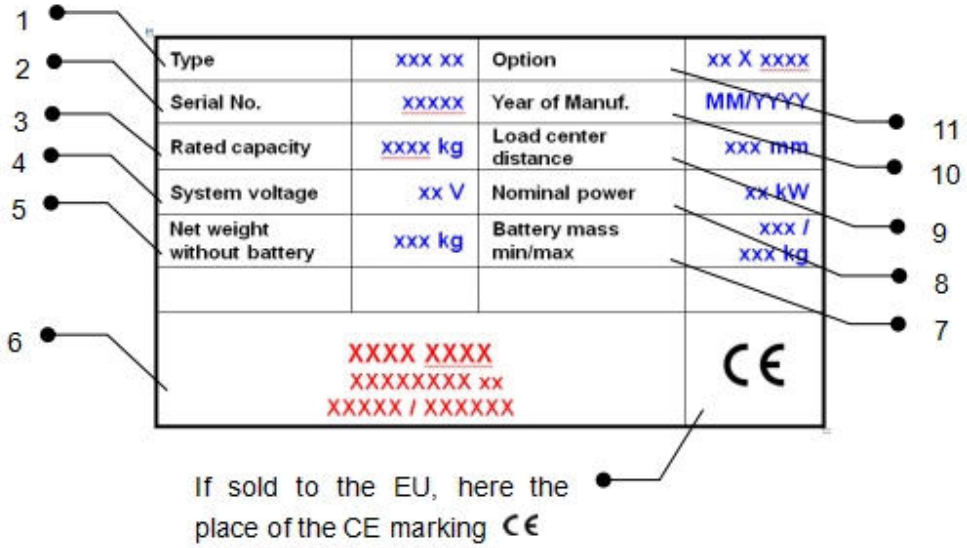

Fig. 6: Identification plate (ID-plate)

3. WARNINGS, RESIDUAL RISK AND SAFETY INSTRUCTIONS

- It is prohibited to use the vehicle in environments with explosive gases, explosive dust, and corrosive acid-base conditions;
- It is prohibited to use in poor ground conditions;
- It is prohibited to put your feet or hands under or into the lifting mechanism;
- It is prohibited for other personnel to stand in front or behind the forklift while driving or lifting/lowering it;
- Overloading is prohibited, and the load weight and lifting height must meet the requirements of the load curve;
- Placing your feet on the outside of the forklift while driving is strictly prohibited due to potential injury;
- Lifting personnel is prohibited due to the risk of falls and serious injury;
- It is prohibited to push or pull goods;
- It is prohibited to load unstable, loose and unbalanced cargo, and the center of gravity of the cargo must be in the middle of the two forks;
- Turn off the power supply and unplug the key when leaving the forklift to prevent other personnel from operating it by mistake;
- It is prohibited to modify the forklift without the written consent of the manufacturer;
- The lifted goods will become unstable when they are affected by wind. Do not lift the goods when there is wind.

Observe different ground conditions while driving, cargo may drop or the vehicle may lose control. Check the load frequently and stop operating the vehicle immediately if the load becomes unstable. When the goods slide on or off the vehicle, immediately brake the vehicle and press the emergency power-off switch. Refer to Chapter IX for any forklift malfunctions.

- Forklift should be used on a flat and firm surface or ground with good ventilation.
- Forklift driving operators must be trained and obtain the appropriate driver's license;
- When operating this forklift, the operator must wear safety shoes;
- The operating environment temperature is from+5C° to+40C°;
- The lighting conditions in the work environment must reach a minimum of 50 lux;

4. COMMISSIONING, TRANSPORTING, DECOMMISSIONING

a. Commissioning

Upon receipt of our new forklift trucks or if recommissioning is required, please follow these steps before operating the vehicle (for the first time):

- Recheck the packing list to confirm that all parts are included and undamaged;
- Conduct daily inspections and machine function checks;
- Installation and charging of batteries (refer to Chapter VII)

Table 2: Chassis and Gantry Weights

Vehicle Model	CBT15			
Packing weight [kg]	4150	4115	4080	3980
Package size [mm]	2000x1130X2575	2000x1130X2415	2000x1130X2260	2000x1130X1840
Lifting height H3 [mm]	6200	5720	5260	4000

b. Hoisting/transportation

When loading and unloading, please follow the equipment lifting or forking instructions shown in the figure below.

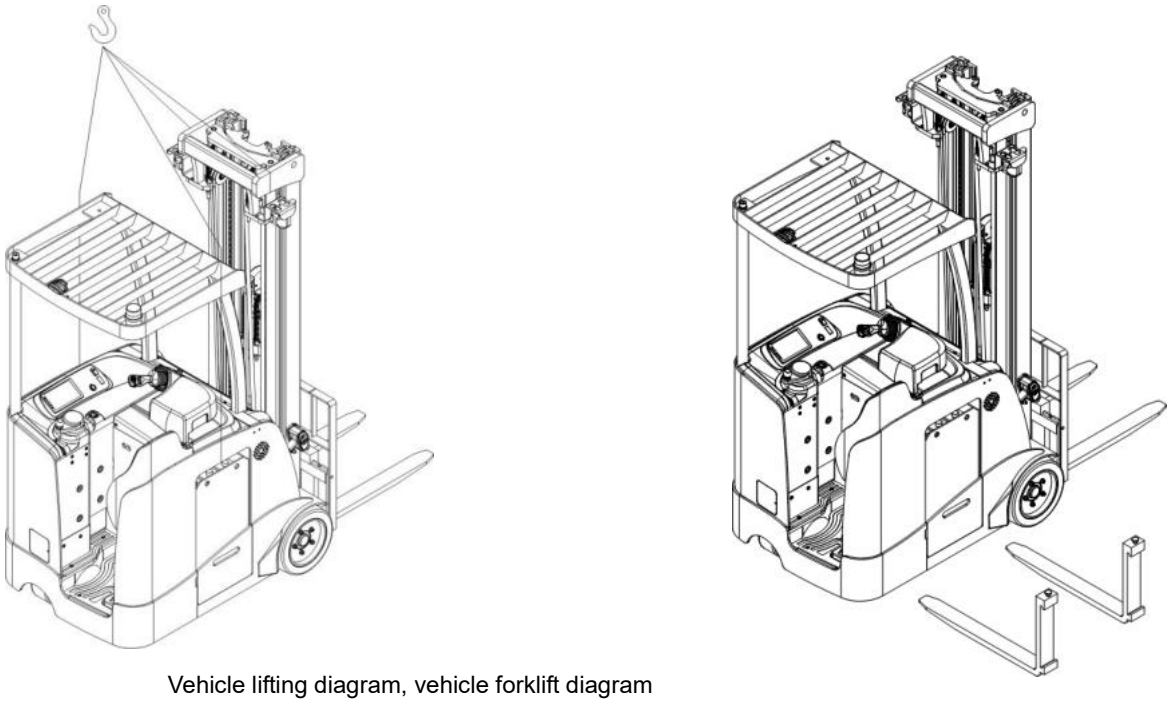

Vehicle lifting diagram, vehicle forklift diagram

Figure 7: Lifting diagram

Hoisting

Using professional cranes and lifting equipment.
Do not stand under wobble goods.
Do not enter hazardous areas during lifting.
Place the forklift on a level ground.

Transportation

During transportation, the forklift needs to be securely fixed to the truck.

Lower the forks and park the vehicle safely.

Securely attach the forklift to the transport vehicle as shown in Figure 9 and pad the cab end with sleepers to prevent damage to the drive wheels during transportation.

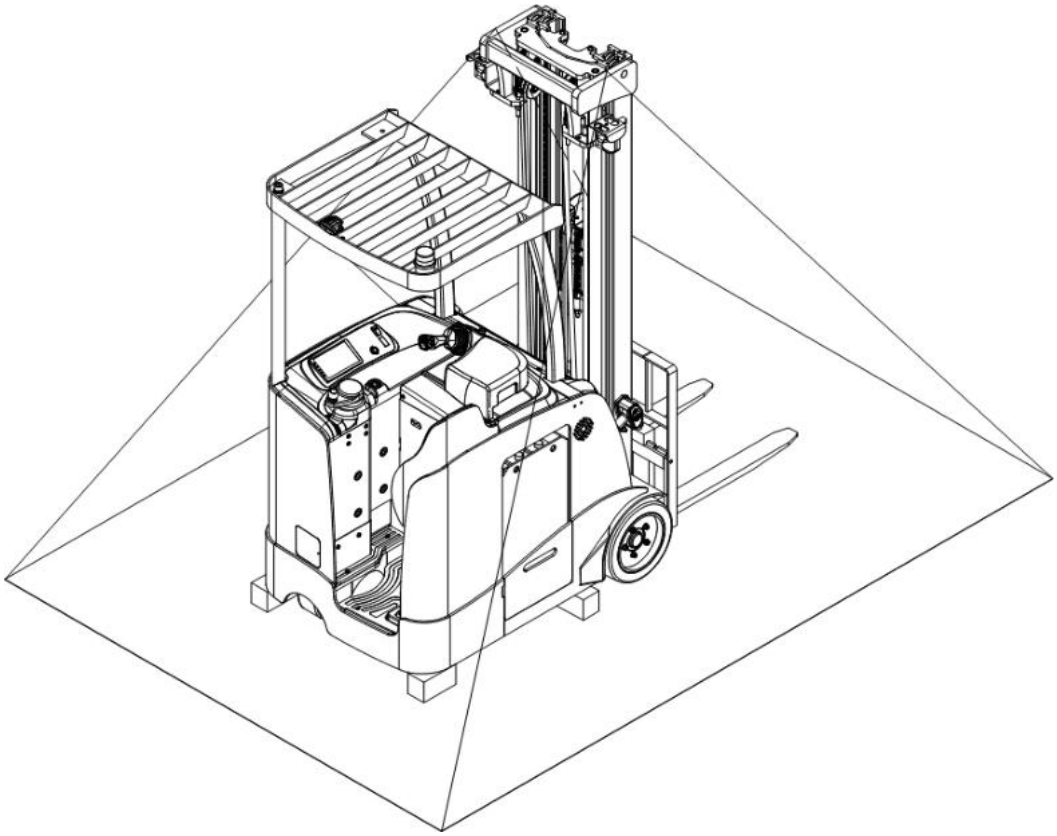

Figure 8: Transportation Bundling Diagram

c. Storage/shutdown

Lower the fork to its lowest position as shown in Figure 10, and use sleepers to cushion the driver's cab end for suspending the drive wheel and preventing long-term storage damage.

Apply grease to all lubrication points mentioned in this manual (regular inspection) to prevent rusting and dust accumulation on the vehicle.

Charge vehicles that have been out of service for a long time once a month to prevent battery damage.

For vehicles that are eventually scrapped, please give them to the relevant recycling company. According to regulations, oil, batteries and electronic components should be recycled or treated harmlessly.

5. REGULAR INSPECTION

This chapter explains the pre-work inspection required before operating the vehicle.

The vehicle should undergo daily inspections to effectively detect faults or malfunctions. Before operation, the following key points of the vehicle need to be checked.

Remove the goods from the vehicle and lower the forks.
If any malfunctions are found, please stop using this vehicle.

- Check for scratches, deformations, or cracks.
- Check the oil cylinder for oil leakage.
- Check the longitudinal driving condition of the vehicle.
- Check the chain and roller for damage or corrosion.
- Check whether the wheels can move smoothly.
- Press the emergency stop button to check the emergency stop function.
- Check the braking function of the foot brake.
- Operate the handle to check the lifting and lowering functions.
- Check the horn.
- Recheck the tightness of all bolts and nuts (focus on the connection between the earrings of the tilting cylinder and the piston rod).
- Check the function of the key switch.
- Check the speed limit switch.
- Visually inspect for any damaged tubing or electrical wiring.
- If the vehicle is equipped with a guard, check it for damage and correct installation.

Special Note:

For new vehicles put into use or forklifts with changed wheels, the operator must check the tightness of the tire nuts before starting work every day within the initial 50 hours of operation. If any nuts are found to be loose, they must be tightened to a torque of 140Nm. After working for 50 hours, it is necessary to conduct another inspection, and then repeat the inspection every 50 hours until there is no looseness after multiple consecutive checks (maintain the correct torque).

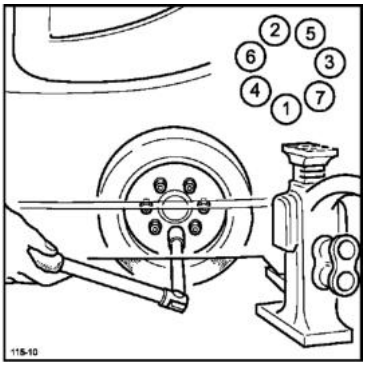

6. OPERATION INSTRUCTIONS

a. Arrangement of operation control device

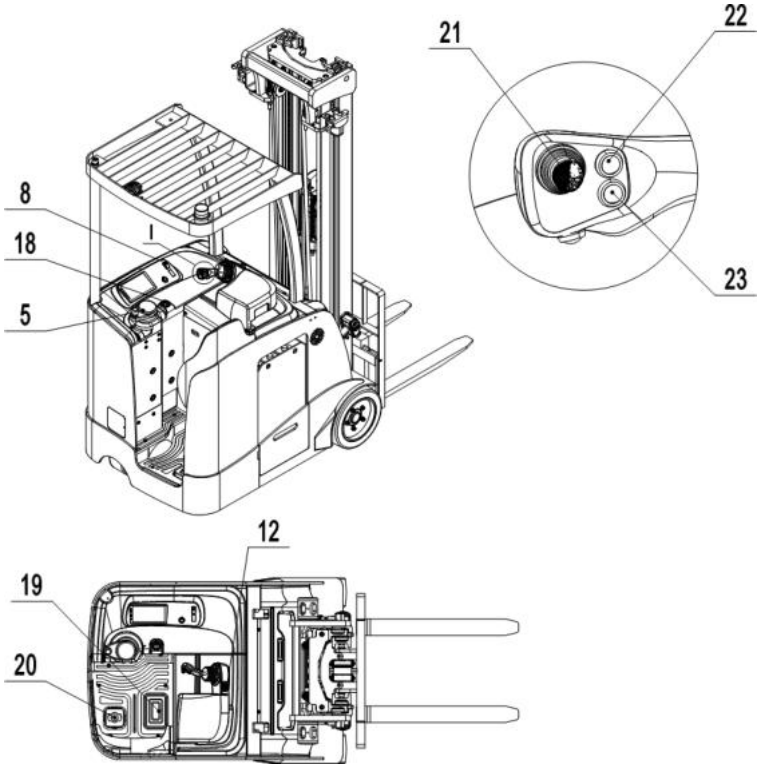

Figure 9: Operation control diagram

b. **Vehicle power-on**

Before operating this vehicle, please ensure that the goods or other equipment will not cause insufficient visibility, and ensure that the goods are placed horizontally and stably.

Pull up the emergency power-off switch (12), insert the key switch (18) and turn it clockwise to the "ON" position, then step on the brake pedal (20) and pedal switch (19). Press the horn button (23) if necessary before starting the vehicle to activate the horn and sound a warning to others. Vehicle power-on is completed.

c. Drive

Turn the inserted key to the "ON" position to start the vehicle. First, press the brake pedal (20) and pedal switch (19), and then put your hands in the operation area. By pushing or pulling the operating handle (9) in the fork direction, the vehicle is controlled to move forward or backward, and the driving speed is controlled by the force of pushing and pulling until the desired speed is reached. After releasing the operating handle, the vehicle will slow down slowly. Please control the speed to ensure safety. If you need to decelerate sharply, please release the brake pedal (20).

This vehicle is equipped with a footboard and handrails.

When the forklift is not operated, you can rest your feet on the footboard. However, you must keep both feet on the pedals when operating the forklift.
The height of the handrail can be adjusted by loosening the handle at the bottom of the handrail.

When driving, please drive the vehicle carefully, observe the road conditions and adjust the driving speed by controlling the strength of pushing and pulling the control handle.

This vehicle is equipped with adequate safety devices to minimize accidents. When the height of the fork exceeds the free lifting height, the speed of the vehicle will decrease in order to achieve smooth walking and safe operation; When the fork descends below the free lifting height, the vehicle's driving speed will return to normal.

When driving at a higher speed, please keep the lifting height of the fork below 0.5 meters.
After using the forklift, please drive the forklift to a safe storage area and lower the fork to the lowest position. Turn the key counterclockwise to the "OFF" position and remove the key.

Note: When the power supply is turned on, the system performs self-inspection. When there is an error in the electrical system, such as open circuit or short circuit, or the control button is active (such as pressing the brake switch first, the speed controller is not in the neutral position, etc.), the vehicle will not be able to run and report the fault, and it can only work after the fault of the electrical system is resolved.

d. Steering

The vehicle uses a hydraulic steering system.

Control the vehicle to turn left or right by manipulating the steering wheel (5) to rotate clockwise and counterclockwise.

Turning the steering wheel makes the steering wheel go straight ahead, which can make the driving speed reach full speed. When the steering wheel rotates at a certain angle, the steering wheel also rotates at a certain angle to achieve the effect of turning. In the process of turning, when the turning angle exceeds ±10°, compared with straight driving, the speed will decrease with the degree of turning, and the larger the turning angle, the smaller the speed, achieving smooth turning and safe driving.

e. Braking

Braking performance depends on road conditions and vehicle load conditions.

During vehicle operation, when the right hand releases the control lever, the vehicle begins to slow down.
If a shorter braking distance is required, please directly release the brake pedal pressed by the left foot until it comes to a stop;
Release the safety brake pedal (20), and the vehicle will also brake and stop;
Press the emergency power-off switch (12), and the vehicle will also brake and stop;

Note: When the fork is loaded with goods, the parking brake should be operated slowly. Please do not take emergency braking to avoid the goods falling.

f. Load curve diagram

The load curve diagram shows the maximum load capacity Q [kg] of a vehicle with a horizontal load at a lifting height of h_3 [mm], given a load center c [mm].
The white marks on the gantry indicate the achievable lifting range.
For example, the distance from the center of gravity of a cargo of CBT15 is 500 mm, the maximum lifting height h_3 is 6200 mm, and the maximum load capacity Q is 600 kg.

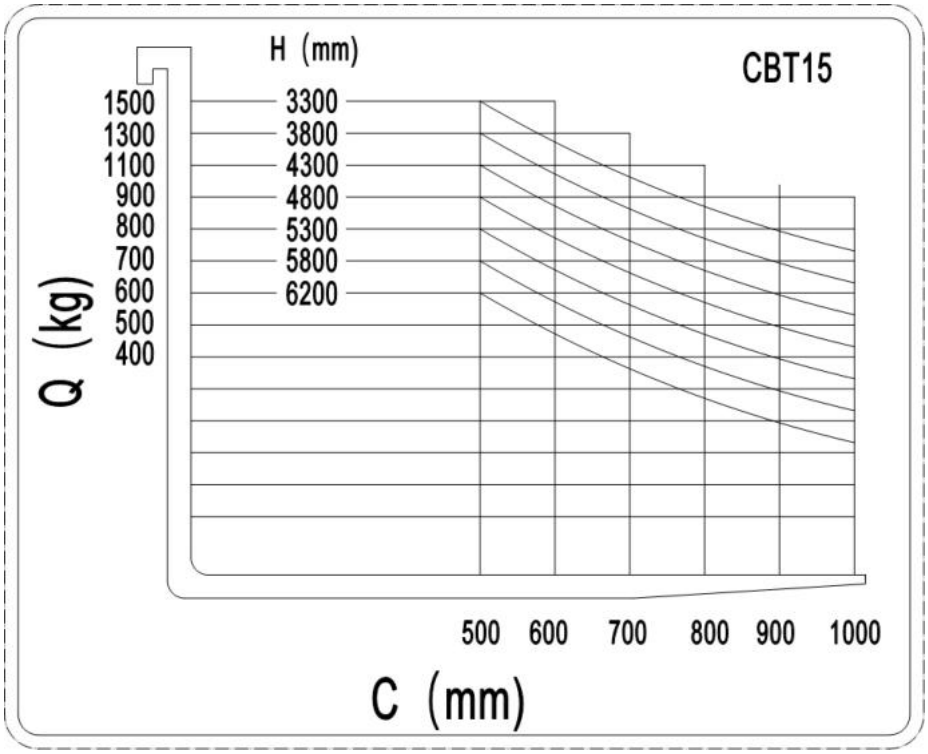

Figure 10: Load curve diagram

g. Lifting

Please do not overload. The maximum load capacity of this vehicle is 1500 kg. Please follow the load curve diagram.

Only lifting the load capacity allowed by the load curve diagram, exceeding the specified load range, may lead to forklift damage and danger.

Pull up the lifting multi-function handle (9) until you reach the desired lifting height.

When the unloaded lifting height exceeds 3 meters or the heavy-load lifting height exceeds 1 meter, please slow down the speed of the vehicle and be careful when turning. It is prohibited to start suddenly, stop suddenly and turn sharply.

Be careful when lifting in the shelf, and pay attention to the gap between the goods and the shelf.

h. Lowering

If the fork is on the shelf, carefully move the vehicle along with the pallet rack out of the shelf or move the vehicle out of the shelf separately.
Pull the multi-function handle (9) downward.
Lower the goods until the forks leave the pallet rack, then carefully drive the vehicle away from the goods.

i. Fork shift left and right (optional)

Operate the multi-function handle (9), press and hold the operation switch (21) to the left, the fork moves to the left.
Operate the multi-function handle (9), press and hold the operation switch (21) to the left, the fork moves to the right.

j. Gantry tilt

Operate the multi-function handle (9), press and hold the operation switch (21) upward, and the fork will tilt downward.
Operate the multi-function handle (9), press and hold the operation switch (21) downward, and the fork will tilt upward.
By operating the multi-function handle (9) and pressing the button (22), the fork can be leveled.

k. Faulty

If there is any fault or the vehicle is inoperable, please stop using the vehicle and press the emergency power-off switch (12). If possible, please park the vehicle in a safe area, turn the key counterclockwise and remove the key switch (18). Notify the manager immediately or contact your after-sales service personnel. If necessary, use dedicated towing/lifting equipment to remove the truck from the operation area;

When a forklift malfunctions, it should be immediately stopped from use and labeled with a sign;

When the vehicle malfunctions, the fault indicator light (wrench shaped) at the bottom of the instrument panel lights up. After the instrument panel displays a fault prompt, the fault can be queried through the corresponding fault code table displayed on the instrument panel, or the cause of the fault can be checked through a handheld unit.

l. Emergency

Press the emergency stop switch (12) immediately in case of vehicle failure, loss of control and other emergencies, upon which all electrical functions will stop.

7. BATTERY CHANGES AND REPLACEMENT

- Only qualified personnel are allowed to repair or charge batteries. Be sure to follow this manual and the battery manufacturer's instructions
- Lead-acid batteries and lithium batteries are allowed to use.
- Battery recycling is subject to national regulations, please follow these regulations.
- When handling batteries, do not use open flames, which may cause gas explosions.
- Burning materials or liquids is prohibited in the battery charging area, smoking is strictly prohibited, and good ventilation must be ensured in the area.
- Park the vehicle safely before charging or installing/replacing the battery.
- Before completing the repair work, ensure that all cables are properly connected and do not interfere with other parts of the vehicle.
- In the process of charging or using, the battery must be replenished with distilled water regularly due to evaporation of water. It is best to check the electrolyte every week, and the liquid level must be maintained between the highest liquid level and the lowest liquid level of the battery. Add distilled water before charging.

The replenishment of distilled water and dosage are shown in the following figure:

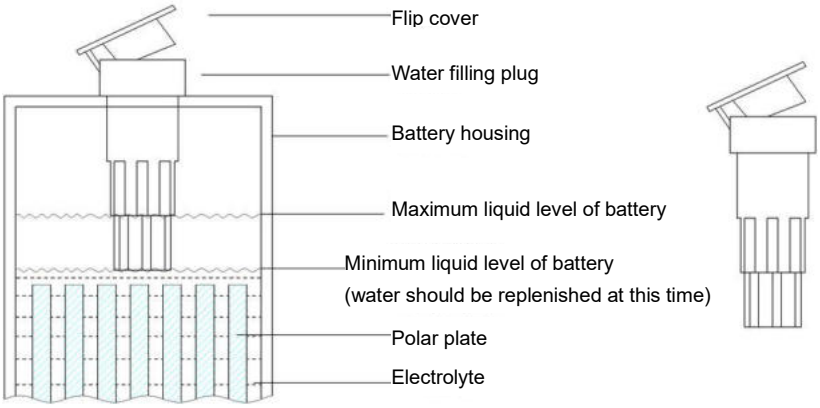

Figure 11: Electrolyte Level Diagram

Note: When the electrolyte level is not enough, do not blindly replenish acid (test the specific gravity after full charge). The battery replenishment liquid must be distilled water! **After charging, the standard specific gravity of the electrolyte is 1.28g/ml.**

For standard batteries, this type of vehicle is equipped with the following battery models:
CBT15:
36V 700AH [410x980x785 mm (LxWxH)]

The weight of the battery has a certain impact on vehicle operation behavior.
Consider the maximum operating temperature of the battery.

a. Battery replacement

Park the vehicle safely, turn off the key switch (18), press the emergency power-off switch (12), unplug the battery connector (24), remove the outer baffle of the battery, and drag the battery out of the storage area along the lower guide rail. A small forklift or a wooden pad can be used to assist in disassembling the battery.

Note that if the device is not safe, the battery may tip over.

Please follow the reverse procedure when installing the battery.

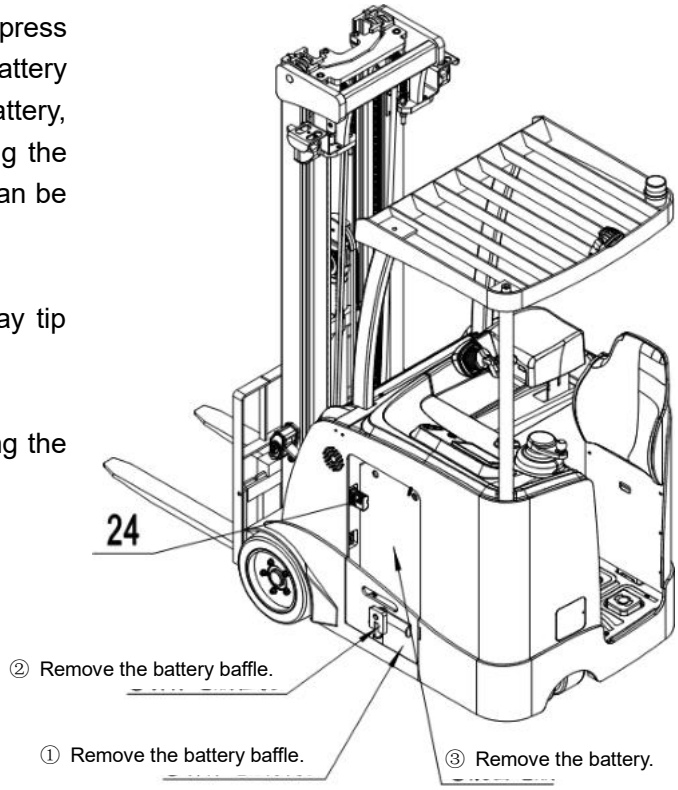

Figure 12: Battery replacement

b. Power display and power alarm

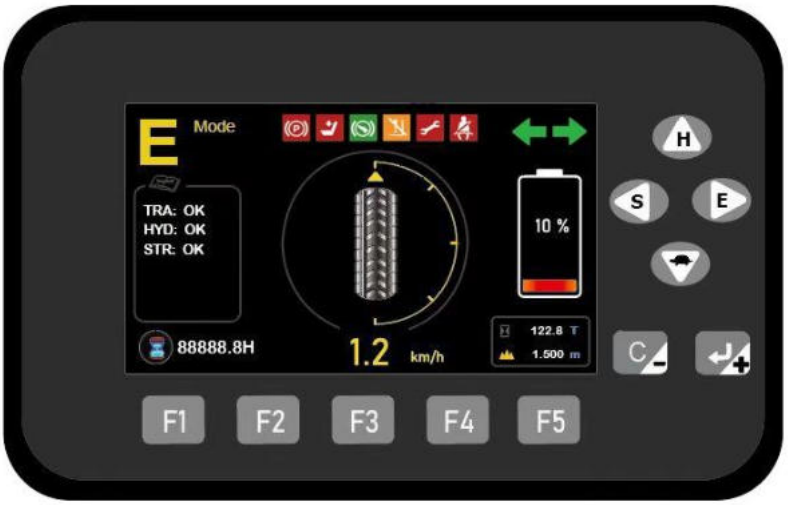

Figure 13: Instrument diagram

The battery level is displayed on the right side of the instrument panel. When fully charged, it is displayed as full grid (green), and the level is displayed as 100%. When the remaining battery level is

about 20%, it is displayed as two grids (yellow), indicating that the battery needs to be charged. When the remaining battery level is about 10%, it is displayed as one grid (red), and the "Do not lift" indicator light is on (the fourth one from the left in the above figure). At this time, the forklift can't lift the goods, but it can walk slowly.

On the right side of the instrument, you can see the keys H, S and E, and you can switch the driving mode, as shown in the upper left corner of Figure 13:

H Mode, high-speed mode, with full speed of 11 km/h.

S Mode, normal mode, with full speed of 7.8 km/h.

E Mode, economy mode, with full speed of 5.5 km/h.

After switching to economy mode, the turtle speed indicator will be displayed in the upper left corner of the instrument.

c. Charging

- It can only be charged with the included charger.
- Before using the charger, please fully understand the contents of the charger manual.
- Please follow these rules.
- The charging room must be well ventilated.

Park the vehicle in a dedicated safe area with dedicated power supply, lower the forks, and remove the goods;
Turn off the vehicle's power supply, connect the connector and charger;
The charger starts charging;
After the charging is complete, remove the connector from the charger;
Connect the battery connector (24) to the vehicle.

d. Description of lithium-ion batteries

- Lithium-ion battery is a kind of battery with rechargeable high-performance energy cells.
- The battery is specially designed for industrial vehicles and can withstand severe vibration and knocking.
- The battery has special interfaces for charging and discharging. Do not use incorrect batteries and chargers.
- The battery has intelligent battery management system, including voltage, temperature and current detection, under-voltage, over-voltage, low temperature, over-temperature, over-current, short circuit, communication and other protective safety functions.
- The internal resistance of the battery is very low, which can minimize heat generation and maximize the available power of the vehicle.

Battery operating temperature range

- The best battery life is achieved when the battery is operated at + 5℃ to + 40℃.
- Low temperatures will reduce the available capacity of the battery, and high temperatures will reduce the service life of the battery.
- The temperature difference between the two ends of the battery must not exceed 5 °C.

Battery charger

- Use only approved battery chargers to charge lithium-ion batteries.

e. Lithium battery label

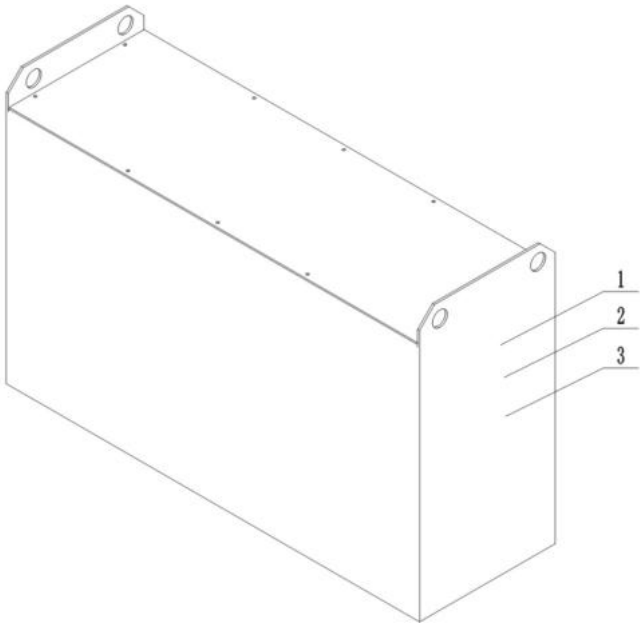

Figure 14: Lithium battery label

Table 3: Lithium battery label

Serial number	Name
1	Warning label
2	Nameplate
3	Serial number

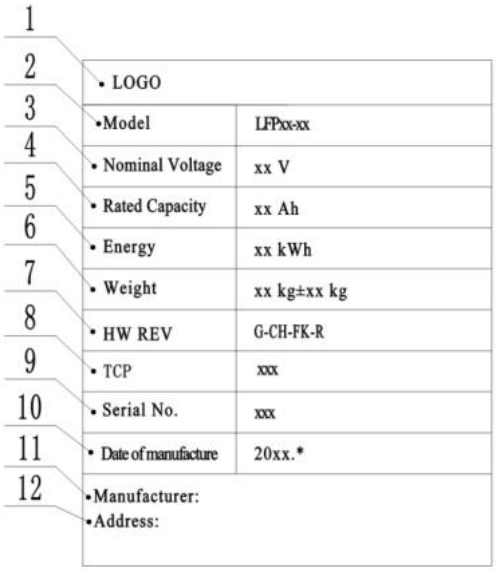

Figure 15: Lithium battery nameplate

Table 4: Lithium battery nameplate

Serial	Name	Serial	Name
1	Manufacturer's trademark	7	Configuration
2	Product Model	8	Protocol Version
3	Rated voltage	9	Serial number
4	Rated Capacity	10	Date of Manufacture
5	Energy	11	Battery manufacturer
6	Weight	12	Manufacturer's address

f. Safety instructions, warning signs and other precautions

Safety regulations for handling lithium-ion batteries

Do not perform any repair or maintenance on the lithium-ion battery. Replacing battery components is not allowed.

Electric shock and burning hazard

The charge and discharge connector terminals of the battery are open. Avoid physical contact, contamination, or direct contact with objects that may short-circuit the terminals. Use necessary preventive measures and protective sleeves to secure open terminals. The connector must be dry and clean when used.

This vehicle is only allowed to use batteries designed and approved by the manufacturer.

Do not attempt to modify or alter the battery.

Any damage and other defects of the charger may lead to accidents. Only use the charger approved by the manufacturer and suitable for the battery used.

If the charger is damaged or defective, you must stop using the charger and contact the service provider. Do not modify or attempt to repair the charger.

Improper use of the charger or the wrong charger may damage the battery or charger. The input working voltage range and output voltage of the charger are subject to the charger specifications, and the charger can only be used for batteries provided by the manufacturer.

Reversing the charging plug is prohibited. Please follow the instructions to connect correctly. Use a dedicated handle to disconnect the charging plug. Do not pull the cable to remove the plug.

If any abnormality is detected, stop charging immediately, such as serious temperature rise, battery shell deformation, smoke, abnormal noise, etc.

Intermediate charge

Lithium battery support, the so-called opportunity charging. Lithium-ion batteries that are not fully discharged can be charged at any time, whether they are fully charged or not . However, frequent opportunity charging of the battery without being fully charged, and stopping the charging process before the corresponding indication from the charger appears, may lead to voltage imbalance in the battery cells, resulting in an increase in battery BMS calculation error. To effectively address this phenomenon, please fully charge the battery and complete the "automatic balancing" process at least once a week.

It is prohibited to recharge when fully charged.

Note that in order to prevent the battery from being recharged in the full charge state, which will deplete the service life of the battery, the BMS is set with the protection function of prohibiting recharging in the full charge state, and the charger will not work in the full charge state.

Potential hazards

If the equipment is used according to its design purpose and the correct operating procedures are followed, the expected hazards will not occur.

If used incorrectly, the following hazards may occur:

- If the battery is dropped or deformed by impact, it will cause physical damage to the battery. Mechanical damage may lead to leakage of harmful substances, fire or battery explosion.
- A short circuit may be caused by the connection of two battery terminals, such as water or intentional/unintentional short circuit.
- If the battery is placed in an overheated place or affected by fire or direct sunlight, it will cause temperature damage, which may lead to leakage of harmful substances, fire or battery explosion.

To avoid fire, explosion, and/or leakage of harmful substances, a safe place for storing batteries must meet the following conditions before service personnel arrive at the site:

- Do not store in an occupied place.
- Do not store in places with or near valuable items.
- Class D fire extinguishers must be available as required.
- There should be no fire or smoke detectors in the storage area to ensure that the automatic fire detection system is only activated in the event of actual danger (such as open flames).
- There should be no ventilation intake pipe nearby to prevent the emission from spreading in the building.

Examples of places where non-functional batteries are stored:

- Outdoor sites with roofs.
- Ventilation container.
- Covered fireproof box with pressure and smoke vent.

Safety and warning sign

Table 5: Safety and warning sign

	Used lithium-ion batteries must be disposed of as hazardous waste. Lithium-ion batteries marked with recycling signs and crossed trash can signs shall not be disposed of together with ordinary household garbage.
	Avoid fire and short circuit caused by overheating. Do not ignite or place open flames, hot ashes, or sparks near lithium-ion batteries. Keep lithium-ion batteries away from strong heat sources.
	Watch out for the battery! Do not short-circuit the battery.

	Prevent lithium-ion batteries from being exposed to solar radiation or other forms of thermal radiation. Do not expose lithium-ion batteries to heat sources.

Explosion and fire hazards

If the battery has defects, physical damage, thermal shock or improper storage, it may lead to explosion or fire. The battery material may be flammable.

Special hazards of combustion products

Lithium-ion batteries can be damaged by fire. When putting out a lithium battery fire, the following information must be considered.

Contact with combustion products can be dangerous.

Fire produces combustion products. Combustion products can appear in the form of smoke through leaking liquid, escaping gas, debris and decomposition products of certain chemicals . These combustion products can enter the human body through the respiratory tract and/or skin, causing adverse effects such as suffocation.

- **Avoid contact with combustion products.**
- **Use protective equipment.**

Special fire protection equipment

Use self-contained breathing apparatus.

Wear protective equipment.

Additional fire instructions

To prevent secondary fires, lithium-ion batteries must be cooled from the outside.

Applicable extinguishing agent

- Carbon dioxide fire extinguisher (CO2)
- Water (not for mechanically opened or damaged batteries)

Unsuitable extinguishing agent

- Foam
- Grease extinguishing agent
- Dry powder extinguisher
- Metal extinguisher (PM 12i Extinguisher)
- Metallic fire powder PL-9/78 (DIN EN 3SP-44/95)

- Dry sand

Instructions for cooling overheated and non-physically damaged batteries

This type of damage may be caused by short circuit inside the battery, which may lead to leakage of harmful substances, fire or battery explosion.

Material discharge

Battery electrolyte may cause danger.

If the battery is physically damaged, electrolyte may be discharged. Avoid contact with skin or eyes.

If exposed to electrolyte, contact:

- Please flush the affected area with plenty of water and seek medical assistance immediately.
- If skin is irritated or any substance is inhaled, please seek medical assistance immediately.

Personnel preventive measures

- Personnel should stay away and avoid contact with smoke or emissions.
- Block the affected area and ensure proper ventilation.
- Wear personal protective equipment. If there are steam/dust/aerosol emissions, please use a self-contained breathing apparatus.

Environmental preventive measures

Do not allow spilled liquid to enter the water supply system, drainage system, or groundwater.

Cleaning measure

Leakage must be professionally cleared according to relevant agreements and handled in the correct manner.

Battery life and maintenance

The lithium-ion battery module is maintenance-free.

Deep discharge can damage the battery.

Long term self discharge without regular replenishment can lead to complete discharge of the battery. Complete discharge will shorten the service life of the battery. When the battery cannot be recharged, it may cause deep discharge and trigger relevant safety protection functions.

The battery must be charged to 40%~60% before it is not used for a long time.

Charge the battery at least once every 12 weeks.

The storage temperature range of the battery is 0℃~ 30℃.

If the battery is deeply discharged or the battery temperature is lower than the allowable level, the battery is not rechargeable. A deeply discharged battery cannot be recharged permanently. Because of the risk of condensed water, batteries stored at 0℃ or below zero must be naturally heated to at least +5℃ before charging, and forced heating is prohibited.

Battery safety handling

- Do not modify the battery.
- Do not open, damage, drop, penetrate or deform the battery.
- Do not put the battery in the fire.
- Prevent the battery from overheating.
- Prevent the battery from direct sunlight.
- Storage and charging operation rules must be followed.
- Prevent water damage and other impacts on the battery.

Failure to follow these safety instructions may result in fires and explosions or the release of hazardous materials.

Perform a pre-work inspection before using the battery

Check whether the battery is in a normal state, and there is no damage, leakage or abnormal phenomena, such as high temperature, odor and smoke. The surface of the battery shall be clean and dry, free from water damage, and free from rust on terminals and housings (if applicable). The wiring harness and plug are intact and undamaged.

Faulty

If the battery or battery charger is damaged, contact your service provider immediately.

Do not open the battery or attempt to repair it.

Disposal and transportation of lithium-ion batteries

Processing Instructions

Lithium-ion batteries must be disposed of in accordance with relevant national environmental regulations. Batteries must be disposed of as hazardous waste. Batteries must not be disposed of together with ordinary waste.

Transport information

Lithium-ion battery is a dangerous material. Applicable regulations must be followed during transportation.

Transport function battery

Normal batteries can be transported according to relevant regulations.

Transport fault battery

If you need to transport a faulty lithium-ion battery, please contact the service provider. Special transportation procedures must be followed for transporting defective lithium batteries.

8. REGULAR MAINTENANCE

- Only qualified and trained personnel are allowed to carry out maintenance work on this vehicle.
- Before maintenance, remove the goods from the fork and lower the fork to the lowest position.
- To lift the vehicle, use the designated binding equipment or lifting equipment as described in Chapter IV. Before operation, place safety devices (such as designated lifting jacks, wedges or blocks) under the vehicle to prevent it from accidentally falling, moving or sliding.
- To remove the high-pressure oil pipe, please lower the fork, turn off the power supply and let it stand for 10 minutes to release the pressure in each pipeline. Then remove the oil pipe.
- Please use the original spare parts approved and issued by the distributor.
- Please consider that the leakage of hydraulic oil that may lead to machine failures and accidents.
- Only trained service technicians are allowed to adjust the pressure valve.

If you need to replace the wheel, please follow the instructions above. Casters must be round and free of abnormal wear.
Check the key items on the maintenance list.

a. Maintenance list

Table 6: Maintenance list

	Time interval

		(month)			
		1	3	6	12
	Hydraulic System				
1	Check hydraulic cylinder and piston for damage noise and leakage.		•		
2	Check hydraulic connectors and pipes for damage and leakage.		•		
3	Check the hydraulic oil level and replenish it if necessary.		•		
4	Hydraulic oil change (12 months or 1500 working hours)				•
	Mechanical System				
5	Check the fork for distortion and cracks.		•		
6	Check the chassis for deformation and cracks.		•		
7	Check that all screws are tight.		•		
8	Check whether the gantry and chain are corroded, deformed or damaged, and replace them if necessary.	•			
9	Check gear box for noise and leakage.		•		
10	Check the wheel for deformation and damage, and replace it if necessary.		•		
11	Lubricate gantry roller and gantry chain.	•			
12	Lubricating grease nozzle.		•		
13	Check whether the braking function is normal.	•			
	Electric System				
14	Check the wire for damage.		•		
15	Check whether the electrical connection ends are securely fastened.		•		
16	Check the function of the emergency stop switch.		•		
17	Check the electric drive motor for noise and damage.		•		
18	Check the display		•		
19	Check that the correct fuse is used and replace it if necessary.		•		
20	Check the buzzer.		•		
21	Check the current contactor.		•		
22	Check frame for leakage (insulation test).		•		
23	Check the function and wear of the throttle.		•		
24	Check the electrical system of the drive motor.		•		
	Braking System				
25	Check braking performance.		•		
	Battery				
26	Check the specific gravity of battery electrolyte.		•		
27	Clean and grease the terminal and check for corrosion and damage.		•		
28	Check whether the battery case is damaged.		•		
	Charger				
29	Check whether the main power cable is damaged.			•	
30	Check the startup protection procedure during charging.			•	
	Function				
31	Check the buzzer.	•			

32	Check the clearance of the electromagnetic brake.	•			
33	Detect the emergency braking function.	•			
34	Detect the reverse braking and regenerative braking functions.	•			
35	Check steering function.	•			
36	Check the lifting and lowering functions.	•			
37	Check the function of the multi-function handle.	•			
38	Check for damage and functional condition of the key switch.	•			
39	Detect speed limit switch.	•			
	Comprehensive				
40	Check that all labels are clear and complete.	•			
41	Check the wheels and adjust or replace them if they are worn.		•		
42	Conduct a trial run.	•			

b. Lubricating point

Lubricate marked points according to maintenance list. Required grease specification: DIN 51825 standard grease.

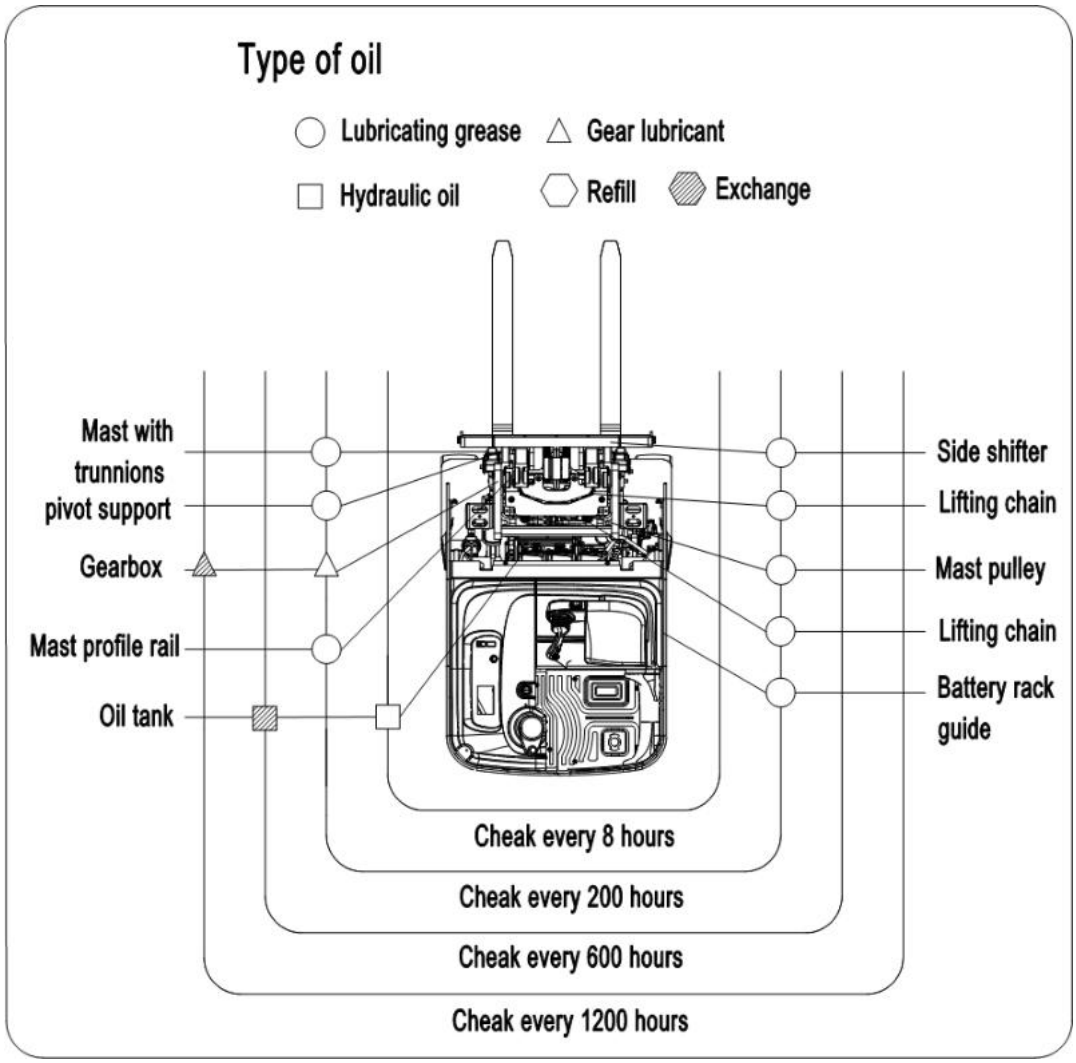

Figure 16: Lubrication diagram of the whole vehicle

c. Check and refill the hydraulic oil

Based on temperature, the recommended hydraulic oil model is:

Ambient temperature	–5℃~25℃	>25℃
Model	HVLP 32, DIN 51524	HLP 46, DIN 51524
Viscosity	28.8-35.2	41.4 - 47
Oil quantity	35L	

Waste materials such as waste oil, batteries, or other materials must be processed and recycled in accordance with national regulations, and if necessary, they must be handed over to recycling companies for recycling.

The oil level should not be lower than the minimum amount of oil required to start the vehicle.
Add oil to the filling point if necessary.

d. Check the electrical fuse (added by electrical personnel)

Remove the plastic cover, and the fuse is located in the position shown in Figure 16. Fuse specifications are shown in Table 4.

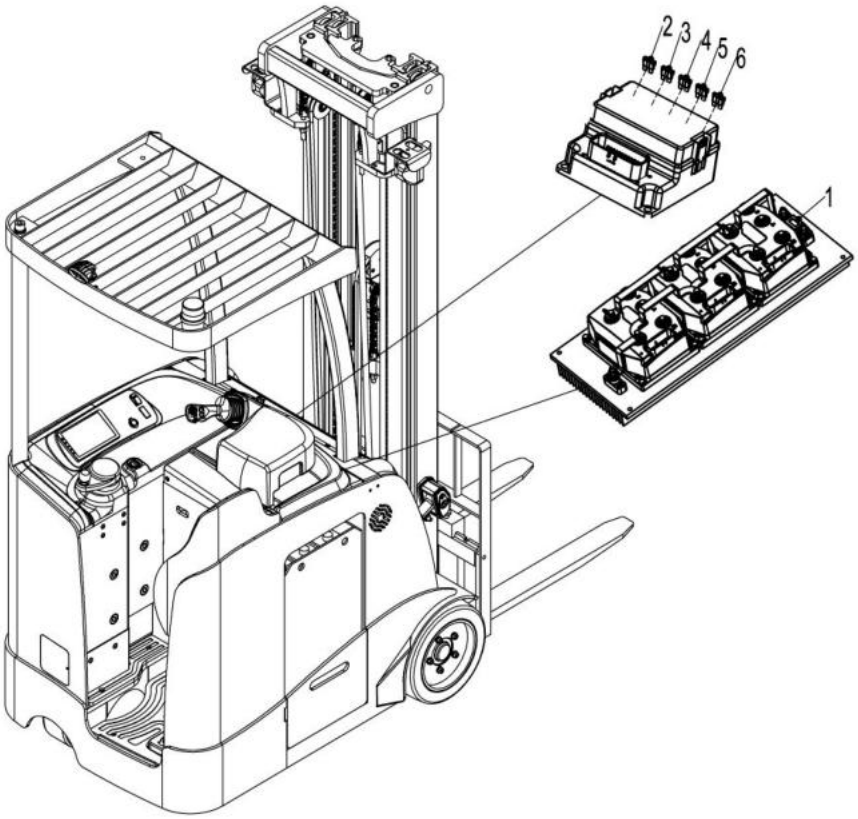

Figure 17: Schematic diagram of the fuse

Table 7: Fuse specifications

Serial number	Specification
1	500A
2	10A
3	10A
4	10A
5	10A
6	10A

9. TROUBLE SHOOTING

- If the vehicle still fails, follow the instructions in Chapter VI of the instruction manual.

Table 8: Fault Analysis

Faulty	Cause	Maintenance
Goods cannot be lifted	Overweight goods	Lift only the maximum load shown on the nameplate.
	Battery discharging	Battery charge
	The lifting fuse is faulty.	Check and eventually replace the lifting fuse.
	Hydraulic oil level is too low.	Check and fill the hydraulic oil.
	Oil leak	Check the sealing of hydraulic hoses and/or cylinders.
Oil leakage due to inhalation.	Excessive oil temperature	Reduce oil temperature
Unable to operate forklift.	The battery is charging.	Fully charge the battery, and then pull the main power plug out of the power socket.
	Battery not connected.	Connect the battery properly.
	The fuse is faulty.	Check and eventually replace the fuse.
	Battery power shortage	Battery charge
	The emergency stop switch is activated.	Insert and pull the knob to eliminate the emergency stop switch function.
The vehicle is only traveling in one direction.	The forward and backward switch and connector are damaged.	Check the throttle and connector.
Forklifts travel very slowly.	Battery power shortage	Check the battery condition on the discharge display.
	The electromagnetic brake has been activated.	Check the electromagnetic brake.
	The related multi-function handle harness is not connected or damaged.	Check the multi-function handle harness and connector.
	Electric system overheating	Stop using and cool down the vehicle.
	The temperature sensor is faulty.	Check and replace the thermal sensor if necessary.
Forklift suddenly starts.	Controller damaged.	Replace the controller.
	The throttle did not move back to the center position.....	Repair or replace the throttle.

If the vehicle malfunctions and cannot be operated outside the work area, lift the vehicle and place a load handling device under the vehicle to ensure its safety, then move the vehicle out of the passage.

10. WIRING/CIRCUIT DIAGRAM

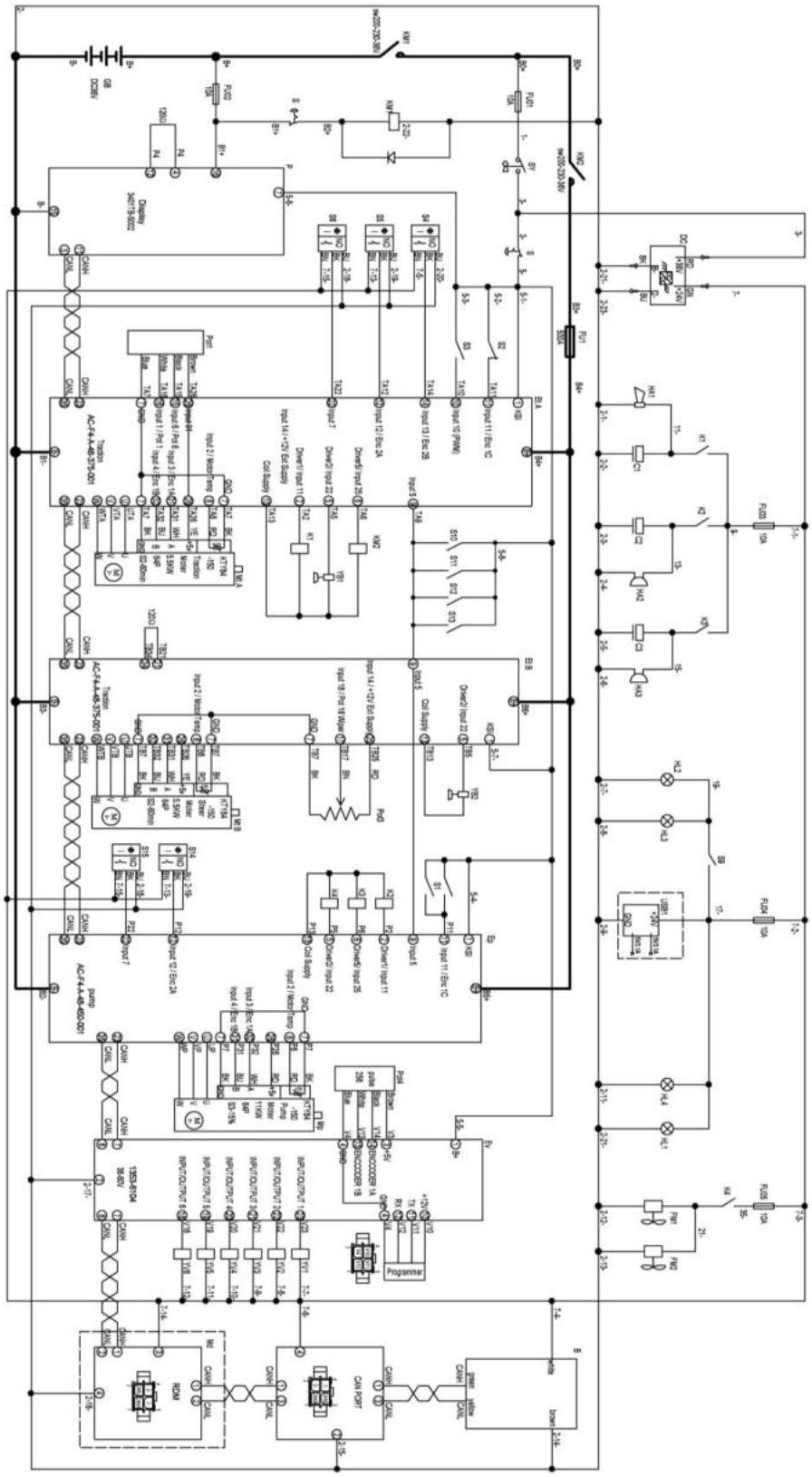

Figure 18: Circuit diagram

Table 9: Symbol description

F4A Symbol description			
Code	Name	Code	Name
GB	Battery 36V	EtB	Traction controller
FU01	Fuse 10A	EV	Valve controller
FU02	Fuse 10A	P	Instrument
FU03	Fuse 10A	SY	Key switch
FU04	Fuse 10A	Pot1	Brake potentiometer
FU05	Fuse 10A	HL4	Blue light
KM1	Main contactor	Pot3	Steering potentiometer
KM2	Main contactor	HA3	Fork leveling buzzer
S	Emergency stop switch	HA2	Reverse buzzer
S1	Boundary switch	YB1	Electromagnetic brake
S2	Electromagnetic brake switch 1	YB2	Electromagnetic brake
S3	Electromagnetic brake switch 2	Md	IoT modules
S4	Lifting speed limit switch	K3	Fork leveling relay
S5	Lifting limit switch	K4	Electric fan relay
S6	Travel speed limit switch	S10	Interlock switch 1
S9	Headlight switch	S11	Interlock switch 2
HA1	Horn	S12	Interlock switch 3
B	Handle	S13	Interlock switch 4
DC	DC Converter	S14	Forward tilt switch
MtA	Traction motor	S15	Back tilt switch
Mp	Oil pump motor	C1、C2、C3	Electric capacity
MtB	Traction motor	FM1、FM2	Electric fan
K1	Horn relay	Pot4	Steering encoder
K2	Reverse relay	USB	USB
EtA	Traction controller		
EP	Oil pump controller		

11. HYDRAULIC DIAGRAM

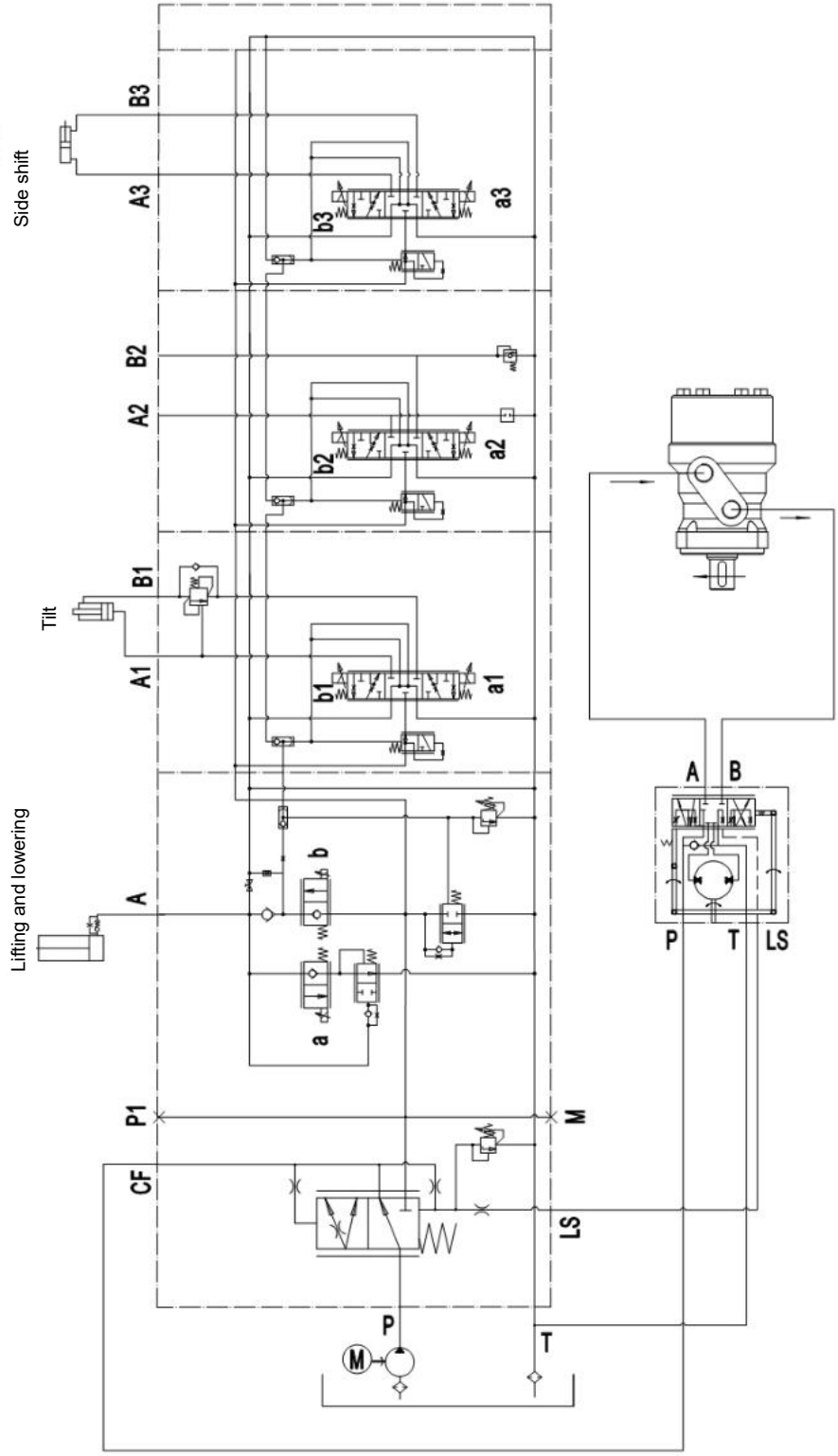

Figure 19: Hydraulic circuit (with side shift)

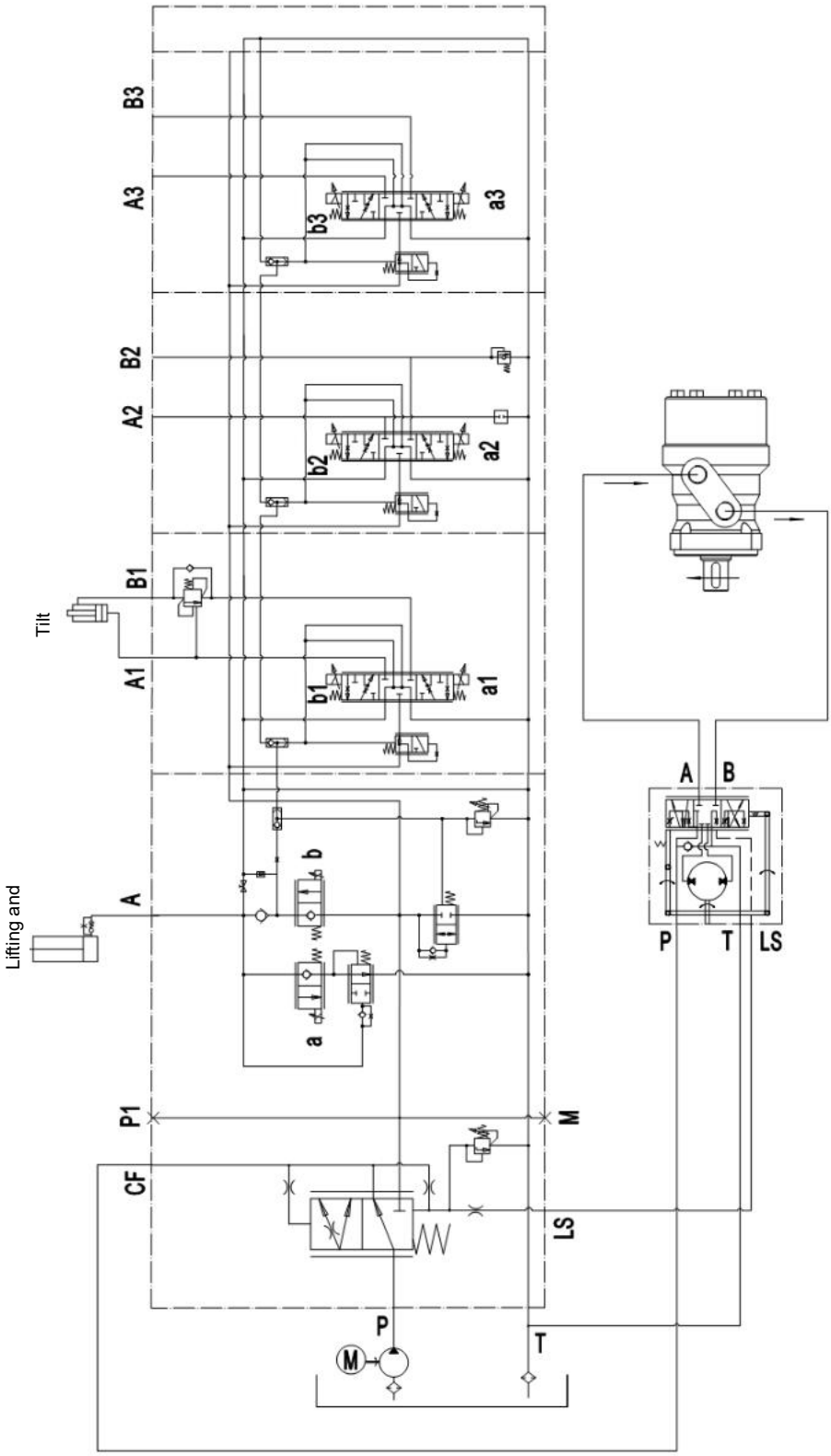

Figure 20: Hydraulic circuit (without side shift)

12. BRAKE SCHEMATIC DIAGRAM

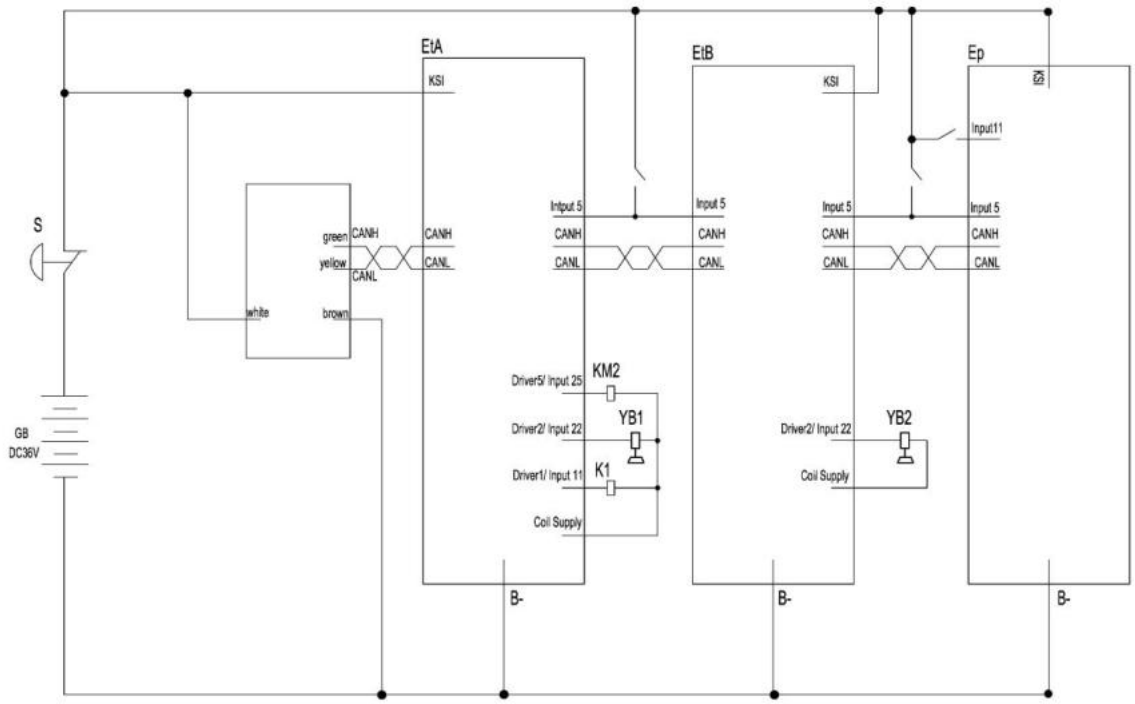

Figure 21: Brake schematic diagram (Service brake)

13. SELF-DIAGNOSIS AND TROUBLESHOOTING

The fault list is arranged in flash code order, listing fault names, VCL names and CAN object indexes, including fault types; The possible causes, setting and clearing conditions and troubleshooting methods are listed; After the setting conditions are solved, the fault is usually cleared by cycling the key switch, but it can be handled by using the applicable VCL Reset function or Can NMT Reset function.

The diagnosis information can be obtained in the following three ways: (1) Observe the fault code that causes the controller status indicator light to flash; (2) read that status indicator lamp in the programmer tool of the Curtis integrated toolkit; (3) CAN urgent message.

The status indicator is a translucent window on the cover, and the red and yellow LEDs flash. Its lighting displays the following information:

Indicator status	Working status or possible cause
None of the lights are ON	The controller is not powered on; Or the battery of the vehicle is dead; Or severely damaged.
The yellow LED flashes slowly.	The controller works properly.
Yellow or orange	The controller is in flash program mode, or damaged software is preventing the unit from completing the startup sequence (startup process).
Red/yellow blinking mode	Fault code, view fault table.
Red light always on.	The monitoring or main microprocessor detects an internal hardware failure, or the controller is not loaded with software.
Red light blinks rapidly.	Non-production/experimental/custom device profile software

When using the Curtis Integrated Toolkit TM Programmer tool to diagnose a fault, the active fault is located at the top of the menu panel, and if a fault has multiple possible causes, the "type" is displayed.

In the "System Monitor" menu, the "Fault History" menu provides additional information; The "Count" represents the number of occurrences since the execution of clearing history. The menu item "Time" indicates KSI hours when the current fault occurs, and the unit is seconds (#sec/3600 = hours), while the menu item "First Time" is used to track the time when the fault occurs for the first time, if there are multiple faults before clearing the history. The "Type" listed at the top of the menu panel is repeated, and it is the current "Fault Type" for faults with multiple types.

Troubleshooting

The fault code table provides all the following information:

•Fault Code
•Fault name displayed on Curtis programmer
•Phenomenon caused by failure
•Possible causes of malfunctions
•Deep cause of the fault
•Resolution State

When a fault occurs, if it is confirmed that it is not a wiring error or a mechanical fault of the vehicle, you can try to restart it through the vehicle key switch. If the fault still exists, please turn off the key switch, check if the 35-pin connector is connected correctly or dirty, repair and clean it, reconnect, and try again.

F4A Drive Controller (Master) Fault Code Table

Serial number	The instrument controller displays fault codes.	Fault Name	Fault Description	Cause or Solution	Fault Source	Remarks
1	1-2	Controller Overcurrent Fault types: 1 = U-phase over current 2 = W-phase over current 3 = V-phase over current 4 = controller current > 135% current limit value.	Turn off the motor, main contactor, electromagnetic brake and throttle, and brake at full power.	1. The external connection of U, V and W phases of the motor is short-circuited; 2. The encoder signal of the motor is disturbed; 3. The motor parameters are misadjusted; 4. The controller is faulty.	Controller	
2	1-3	Current Sensor Fault type: 1	Turn off the motor, main contactor, electromagnetic brake and throttle, and brake at full power.	1. Leakage from U, V or W phase to vehicle body (short circuit in stator) 2. Controller failure 3. Replace controller.	Controller	
3	1-4	Precharge Failed Fault type: 1. Interrupt 2. Energy limit 3. Time limit	Turn off the motor, main contactor, electromagnetic brake and throttle, and brake at full power.	1. The load connected to the B+terminal of the controller suppresses the internal capacitor charging of the controller. 2. Check the voltage displayed on the Programmer \ System Monitor Menu \ Controller \ Capacitor Voltage. 3. Replace the controller.	Controller	
4	1-5	Controller Severe Undertemp	Turn off the motor, main contactor, electromagnetic brake and throttle, and brake at full power.	1. The controller operates in extreme environments. 2. Check the temperature displayed on the Programmer \ System Monitor Menu \ Controller \ Controller Temperature. If the temperature rises to -40℃ or above, restart the key switch or interlock switch. If it fails, replace the controller;	Controller	

5	1-6	Controller Severe Overtemp	Turn off the motor, main contactor, electromagnetic brake, throttle, and perform full power electric braking.	1. The controller works in extreme environment; 2. The load is too heavy; 3. The installation of the controller is unreasonable; 4. Check the temperature displayed by the programmer \ system monitor menu \ controller \ controller temperature. Reduce the temperature to below 95℃. Restart the key switch or interlock switch; if it fails, replace the controller;	Controller	
6	1-7	Severe B+ Undervoltage	No drive torque outputs	1. The battery is exhausted by the non-controller system; 2. The internal resistance of the battery is too high; 3. The battery is not connected when the motor is driven; 4. The fuse connected to B+ is blown or the main contactor is not attracted; 5. The battery parameters of the controller are set incorrectly; 6. Check the voltage displayed by the programmer \ system monitor menu \ controller \ capacitor voltage.	Controller	
7		Severe KSI Undervoltage	None, unless there are specific measures in VCL software.	1. The battery of the non-controller system is exhausted; 2. The resistance of the KSI input line is too high; 3. When the motor is driven, the KSI line is disconnected; 4. The fuse is blown; 5. Check the voltage displayed by the programmer \ system monitor menu \ controller \ key switch voltage.	Controller	

8	1-8	Severe B+ Overvoltage	Turn off the motor, main contactor, electromagnetic brake and throttle, and brake at full power.	1. The battery parameters of the controller are set incorrectly. 2. Regenerative braking. When the battery is recharged with current, the internal resistance of the battery is too high. 3. The battery is not connected during regenerative braking. 4. Check the voltage displayed by Programmer \ System Monitor Menu \ Controller \ Capacitor Voltage.	Controller	
9		Severe KSI Overvoltage	Turn off the motor, main contactor, electromagnetic brake and throttle, and brake at full power.	1. The battery voltage at KSI(pin1) terminal of the controller exceeds the set value of severe high voltage. 2. Check the voltage displayed by programmer \ system monitor menu \ controller \ key switch voltage.	Controller	
10	1-9	Speed limit failure detected.	Turn off the interlock and electromagnetic brakes.	1. It is detected that the motor speed exceeds the Max Speed Supervision setting. 2. The Max Speed Supervision setting value is incorrect. 3. Check the values of Programmer\Application Setup\Max Speed Supervision settings	Controller	

11	1-A	Motor not stopped 1 = the motor moved more revolutions than the parameter, Motor_Not_Stopped_Position_Error setting. The motor turns more than the set parameter (Motor_Not_Stopped_Position_Error). 2 = the motor moved faster than the parameter Motor_Not_Stopped_Speed_Error (RPM) for 160ms. The motor rotates faster than the parameter Motor_Not_Stopped_Speed_Error (RPM) for 160ms. 3 = The three-phase drive has applied an electrical frequency greater than the Motor_Not_Stopped_Max_Frequency parameter, and applied an RMS current greater than the Motor_Not_Stopped_Max_Current parameter for 64ms. Three-phase drive applies a parameter that the electrical frequency is greater than the frequency parameter set in Motor_Not_Stopped_Max_Frequency and the effective current applied in 64ms is greater than the parameter set in Motor_Not_Stopped_Max_Current.	Turn off the motor, main contactor, electromagnetic brake, throttle, oil pump and brake at full power.	1. Motor Not Stopped. Maladjustment. 2. View: Programmer » Application Setup » Motor not stopped menu. 3. Failure or conflict of internal controller, which makes the motor rotate when it stops.	Controller	
12	1-B	Critical OS General (<100) Internal Fault. Contact Curtis support. (>100) An ill-formed or corrupted application package was loaded into controller.	Turn off the motor, main contactor, electromagnetic brake, throttle, interlock, drive 1, drive 2, drive 3, drive 4, drive 5, drive 6, drive 7, proportional drive, oil pump, coil power supply and brake at full power.	1. (<100) Internal failure. 2. (>100) CIT version is too old to fully support FOS version.	Controller	
13	1-C	OS General 2 (<100) Internal Fault. Contact Curtis support. (>100) An ill-formed or corrupted application package was loaded into controller.	The controller is inoperable.	1. (<100) Internal failure. 2. (>100) CIT version is too old to fully support FOS version.	Controller	
14	1-D	Reset Rejected	Turn off the interlock and throttle.	Restart key switch	Controller	
15	1-E	Motor short-circuiting	The controller is inoperable.	Reset controller	Controller	

16	2-2	Controller Overtemp Cutback	Reduce driving and braking torque.	1. The controller works in extreme environment; 2. The load is too heavy; 3. The installation of the controller is unreasonable; 4. The performance of the controller is limited at this temperature. 5. Check the temperature displayed by the programmer \ system monitor menu \ controller \ controller temperature. Reduce the temperature to below 85℃. Restart the key switch or interlock switch; if it fails, replace the controller;	Controller	
17	2-3	Undervoltage Cutback	Reduce driving torque	1. The battery needs to be charged, and the performance of the controller is limited at this voltage. 2. The parameters of the controller battery are set incorrectly. 3. The non-controller system runs out of batteries. 4. The internal resistance of the battery is too high. 5. The battery is not connected when driving the motor. 6. The fuse connecting B+ is blown or the main contactor is not attracted. 7. Check the programmer\system monitor menu\controller\currents\undervoltage cutback. 8. Check the voltage displayed by programmer\system monitor menu\controller\capacitor voltage.	Controller	

18	2-4	Overvoltage Cutback	Reduce the braking torque. Note: This fault can only be detected during regenerative braking.	1. During normal operation, the current generated by regenerative braking is recharged to the battery, and the battery voltage is too high, resulting in failure, and the performance of the controller is limited at this voltage. 2. The battery parameters of the controller are set incorrectly. 3. Regenerative braking. When the battery is recharged with current, the internal resistance of the battery is too high. 4. During regenerative braking, the battery is not connected. 5. Check Programmer\System Monitor Menu\Controller\Currents\Overvoltage Cutback. 6. Check the voltage displayed by programmer\system monitor menu\controller\capacitor voltage.	Controller	
19	2-5	Ext 5V Supply Failure. Failure type: 1. The output voltage of 5V is out of range. 2. The current of 5V voltage is out of range.	Turn off the 5V output	1. The external 5V load is too small (pin 16). 2. Check the voltage and current of 5V output displayed by programmer\system monitor menu\outputs.	Controller	
20	2-6	Ext 12V Supply Failure. Failure type: 1. The output voltage of 12V is out of range. 2. The current of 12V voltage is out of range.	Turn off the 12V output	1. The external 12V load is too small (pin 23). 2. Check the voltage and current of 12V output displayed by programmer\system monitor menu\outputs.	Controller	
21	2-8	Motor Temp Hot Cutback	1. Reduce the driving torque. 2. If MotorBrakingThermal CutBack_Enable = On, reduce the braking torque.	1. The motor temperature is greater than or equal to the set value of Temperature Hot, which causes the controller to output current limit. 2. The motor temperature and sensor parameters are set incorrectly. 3. Check programmer \ AC motor setup \ temperature sensor.	Controller	

22	2-9	Motor Temp Sensor	Enter the LOS mode, reduce the motor speed, and turn off the high position reduction function of the motor.	1. The temperature sensor of the motor is not connected properly; 2. The polarity of the sensor is not connected correctly (pin 9 and pin 12). 3. The temperature of the motor and the sensor parameters are set incorrectly. 4. Check the programmer\system monitor menu\AC motor\temperature.	Controller	
23	3-1	Main contactor drive fault (Main Driver). Fault Type: 1. Drive Short Circuit. 2. Drive Overcurrent. 3. Open/Short Circuit (High detected, should be Low). 4. Open/Short Circuit (Low detected, should be High). 5. Disconnect	Turn off the motor, main contactor, electromagnetic brake and throttle, and brake at full power.	1. Driver load is open or short-circuited. 2. Dirty connector pin or contactor coil. 3. Incorrect crimping or wiring of connector.	Controller	
24	3-2	EM Brake Driver Fault. Fault Type: 1. Drive Short Circuit. 2. Drive Overcurrent. 3. Open/Short Circuit (High detected, should be Low). 4. Open/Short Circuit (Low detected, should be High). 5. Disconnect	Turn off the electromagnetic brake, throttle, and brake at full power.	1. Driver load is open or short-circuited. 2. Dirty connector pin or contactor coil. 4. Incorrect crimping or wiring of connector.	Controller	
25	3-4	Load Hold Driver Fault	Close the currently assigned driver	Equivalent to Driver 1 Fault	Controller	
26	3-5	Lower Driver Fault	Close the currently assigned driver	Equivalent to Driver 1 Fault	Controller	
27	3-6	Encoder Fault. Fault type: 1. Verification loss. 2. Overcurrent leads to pulse loss. 3. Loss of speed pulse signal. 4. Motor matching. 5. The power supply part of the encoder is faulty.	Turn off the electromagnetic brake, throttle, and brake at full power.	1. Motor encoder fails. 2. Crimping or wiring error. 3. Check programmer\system monitor menu\AC motor\motor rpm. 4. Check Programmer\AC Motor Setup\Quadrature Encoder\Encoder Fault Setup. 5. Check programmer\system monitor menu\hardware inputs: Analog 3 and 4.	Controller	
28	3-7	Motor Open Circuit	Turn off the motor, main contactor, electromagnetic brake and throttle, and brake at full power.	1. Open circuit of motor phase. 2. Wrong crimping or wiring.	Controller	

29	3-8	Main Contactor Welded	Turn off the motor, main contactor, electromagnetic brake and throttle, and brake at full power.	1. The contact of the main contactor is always welded; 2. The V-phase or U-phase of the motor is open; 3. External voltage is directly connected to the B+ terminal of the controller.	Controller	
30	3-9	Main Contactor Did Not Close. Fault type: 1. After the control command is given, the main contactor does not close. 2. When working, the main contactor is disconnected.	Turn off the motor, main contactor, electromagnetic brake and throttle, and brake at full power.	Type 1: 1. The main contactor did not close. 2. The contact of the main contactor is defective. 3. The controller B+ terminal is externally connected with a heavy load, which leads to the inability to effectively charge the capacitor. 4. The large-current fuse is blown. 5. The main contactor parameter is set incorrectly. Type 2: 1. The main contactor is disconnected during operation 2. The contactor coil is disconnected. 3. The contactor is faulty.	Controller	
31	4-2	Throttle input fault. Fault type: 1. The external input is too low or too high.	Turn off the throttle.	1. The input voltage of the throttle exceeds the range set by Analog Low and Analog High, and the corresponding analog input is defined as the throttle input. 2. Check Programmer\Controller Setup\Analog Inputs\Analog 1 Type 3. Check Programmer\Controller Setup\Analog Inputs\Configure	Controller	
32	4-4	Brake Input Fault	Full power braking	The corresponding fault triggered by the brake input source (assigned analog input). Note: Input troubleshooting may also be an input voltage out of range.	Controller	
33	4-6	NV Memory Failure. Fault type: 1. Invalid check; 2. Error in writing data; 3. Data reading error; 4. Data writing was not completed due to power failure.	Turn off the motor, main contactor, electromagnetic brake, throttle, interlock, drive 1, drive 2, drive 3, drive 4, drive 5, proportional drive and brake at full power.	1. NV Memory Failure. 2. Internal failure of controller.	Controller	

34	4-7	HPD Sequencing Protection	Turn off the throttle.	1. The sequence of key switch, interlock, direction switch and throttle input operation is incorrect; 2. Incorrect wiring or crimping of key switch, interlock, direction switch and throttle input; 3. The key switch, interlock, direction switch and accelerator input are damp; 4. Check the programmer \ system monitor menu \ inputs \ switch status; 5. Check the programmer \ system monitor menu \ inputs \ throttle command.	Controller	
35		EMR Rev HPD	Turn off the throttle and use the electromagnetic brake.	The emergency reverse operation has ended, but the throttle input, direction switch, and interlock have not returned to their original positions.	Controller	
36		Pump HPD Protection. Fault type: 1. Only lifting; 2, Only lowering; 3. Lifting and lowering.	Turn off pump.	Incorrect input conditions for lifting/lowering throttle (>25%). Parameter setting error: 1. Hydraulic suppression type; 2. HPD/SRO determines hardware failure of the oil pump accelerator.	Controller	
37	4-9	Parameter Change Fault. Fault type: CAN ID of recording parameter.	Turn off the motor, main contactor, electromagnetic brake and throttle, and brake at full power.	After the interlock is closed, modify the safety-related parameters (the parameters marked with PCF).	Controller	
38	4-A	EMR Switch Redundancy Fault	Turn off the interlock and use the electromagnetic brake.	1. One or two of the emergency reverse switches do not work, resulting in an invalid state. 2. The switch is wet or dirty.	Controller	
39	5-1	Arm PDo Timeout Fault	Turn off the motor, main contactor, electromagnetic brake and throttle, and brake at full power.	Check the handle	Controller	OEM Fault (Custom Fault)
40	5-4	VCL HPD Fault	Turn off the motor, main contactor, electromagnetic brake and throttle, and brake at full power.	Throttle signals come first, and operate in the correct order.	Controller	OEM Fault (Custom Fault)
41	5-5	VCL SRO Fault	Turn off the motor, main contactor, electromagnetic brake and throttle, and brake at full power.	Switch signals come first, and operate in the correct order.	Controller	OEM Fault (Custom Fault)

42	5-6	Display Config Fault	Turn off the motor, main contactor, electromagnetic brake and throttle, and brake at full power.	Check display configuration.	Controller	OEM Fault (Custom Fault)
43	5-7	BMS Fault Grade Non-Zero	Turn off the motor, main contactor, electromagnetic brake and throttle, and brake at full power.	Check battery	Battery	OEM Fault (Custom Fault)
44	5-8	Remote pdo timeout	Turn off the motor, main contactor, electromagnetic brake and throttle, and brake at full power.	Solve the communication problems with the controller (matching, protocol, line, etc.)	Controller	OEM Fault (Custom Fault)
45	5-9	Steer angle changed	Turn off the motor, main contactor, electromagnetic brake and throttle, and brake at full power.	180/360 angle mode switch, restart the key switch, eliminate the fault and switch to the corresponding angle mode.	Controller	OEM Fault (Custom Fault)
46	5-A	BMS Temp LOW Fault	Turn off the motor, main contactor, electromagnetic brake and throttle, and brake at full power.	Check battery	Battery	OEM Fault (Custom Fault)
47	5-B	Redundance Check Fault	Turn off the motor, main contactor, electromagnetic brake and throttle, and brake at full power.		Controller	OEM Fault (Custom Fault)
48	5-C	Battery type mismatch	Turn off the motor, main contactor, electromagnetic brake and throttle, and brake at full power.	Select the correct battery type.	Battery	OEM Fault (Custom Fault)
49	5-D	Wrong 3401 Model Fault	Turn off the motor, main contactor, electromagnetic brake and throttle, and brake at full power.	Select the correct instrument type.	Instrument	OEM Fault (Custom Fault)
50	5-E	Non Curtis Display	Turn off the motor, main contactor, electromagnetic brake and throttle, and brake at full power.	Check the display.	Controller	OEM Fault (Custom Fault)
51	5-F	Pump Handshake Fault	Turn off the motor, main contactor, electromagnetic brake and throttle, and brake at full power.	Solve the communication problems with the controller (matching, protocol, line, etc.)	Controller	OEM Fault (Custom Fault)
52	6-2	PDO Timeout BMS	Turn off the motor, main contactor, electromagnetic brake and throttle, and brake at full power.	Check battery and communications.	Battery	OEM Fault (Custom Fault)

53	6-3	BMS Temp High Fault	Turn off the motor, main contactor, electromagnetic brake and throttle, and brake at full power.	Check battery	Battery	OEM Fault (Custom Fault)
54	6-4	BMS low AH	No action	Charging required	Battery	OEM Fault (Custom Fault)
55	6-5	BMS voltage difference fault	Turn off the motor, main contactor, electromagnetic brake and throttle, and brake at full power.	Check battery	Battery	OEM Fault (Custom Fault)
56	6-6	BMS Severe Overvoltage	Turn off the motor, main contactor, electromagnetic brake and throttle, and brake at full power.	Check battery	Battery	OEM Fault (Custom Fault)
57	6-7	BMS Undervoltage	Turn off the motor, main contactor, electromagnetic brake and throttle, and brake at full power.	Check battery	Battery	OEM Fault (Custom Fault)
58	6-B	Throttle Pedal SRO Fault	Turn off the motor, main contactor, electromagnetic brake and throttle, and brake at full power.	The throttle has an output before interlocking. Check the throttle.	Throttle	OEM Fault (Custom Fault)
59	6-D	Display Config Fault	Turn off the motor, main contactor, electromagnetic brake and throttle, and brake at full power.	Check the instrument.	Instrument	OEM Fault (Custom Fault)
60	6-E	Entry Bar Outline Fault	Turn off the motor, main contactor, electromagnetic brake and throttle, and brake at full power.	Check whether the Entry Bar Outline is closed.	Throttle	OEM Fault (Custom Fault)
61	7-1	OS General	Turn off all	Reset controller	Controller	
62	7-2	PDO Timeout	Trigger: The time for two adjacent PDOs to receive information exceeds the set PDO timeout. Clear: received the CAN NMT information or reset the controller.	1. The time for two adjacent PDOs to receive information exceeds the set PDO timeout. 2. Adjust the PDO settings and view Programmer/Application Setup/CAN Interface/PDO Setups.	Controller	
63	7-3	Motor Stall Detected	Turn off the motor, electromagnetic brake and throttle, change the control mode to LOS, and the motor output is limited.	1. The motor is stalled; 2. The motor encoder is invalid; 3. Wrong crimping or wiring; 4. The power supply part of the motor encoder is abnormal; 5. Check the Programmer\System Monitor Menu\AC Motor\Motor RPM.	Controller	

64	7-7	Supervision Fault. Fault type: Curtis monitoring code	Turn off the motor, main contactor, electromagnetic brake, throttle, interlock, drive 1, drive 2, drive 3, drive 4, drive 5, proportional drive and brake at full power.	Controller Internal Fault	Controller	
65	7-9	Supervision Input Check Fault	Turn off the motor, main contactor, electromagnetic brake, throttle, interlock, drive 1, drive 2, drive 3, drive 4, drive 5, proportional drive and brake at full power.	Controller Internal Fault	Controller	
66	8-2	PDO Mapping Error	Turn off PDO	1. There are too many data bits in PDO mapping, or the target is incompatible; 2. Adjust PDO settings and check Programmer/Application Setup/CAN Interface/PDO Setups.	Controller	
67	8-3	Internal Hardware Fault. Fault type: Curtis hardware code.	Turn off the motor, main contactor, electromagnetic brake and throttle, and brake at full power.	Internal fault detected in the controller.	Controller	
68	8-4	Motor Braking Impaired	Turn off the motor, main contactor, electromagnetic brake and throttle, and brake at full power.	Battery overcharge, motor or controller overheating, or inappropriate parameters. Reset the interlock pedal	Controller	

69	8-7	Motor characterization error. Fault type: 71. Failure to write to memory RAM; 72. Temperature sensor malfunction; 73. Motor overheating; 74. Temperature reduction of the controller; 76. Low pressure reduction; 77. High pressure reduction; 78. No encoder signal; 79. The current verification is out of range; 80. The current verification is out of range 81. Can detect encoder signals, but cannot automatically detect the number of pulses per revolution (encoder steps); 82. Automatic matching failed; 90/98, unable to detect feedback sine/cosine signals from permanent magnet synchronous motors; 91. Permanent magnet synchronous motor does not rotate; 92. Permanent magnet synchronous motors do not accelerate or experience low acceleration; 94-97. Delay compensation of permanent magnet synchronous motor exceeds the range; 99. The permanent magnet synchronous motor rotates at the beginning of matching; 102. Temperature sensor failure of permanent magnet synchronous motor; 103. High temperature reduction of permanent magnet synchronous motors; 104. Temperature reduction of permanent magnet synchronous motor controller; 106. Low voltage reduction of permanent magnet synchronous motor controller; 107. High voltage reduction of permanent magnet synchronous motor controller.	Turn off the motor, main contactor, electromagnetic brake and throttle, and brake at full power.	Motor matching failed during motor matching process.	Controller	

70	8-8	Encoder Pulse Error	Turn off the motor, main contactor, electromagnetic brake and throttle, and brake at full power.	1. The encoder step setting does not match the actual value; 2. Verify parameter settings and check the Programmer \ AC Motor Setup \ Quadrature Encoder \ Encoder Steps; 3. When the motor loses IFO control and there is no accelerator signal input, the motor accelerates and rotates.	Controller	
71	8-9	Parameter Out of Range. Fault type: Record the target CAN ID.	Turn off the motor, main contactor, electromagnetic brake and throttle, and brake at full power.	1. Parameter value out of range detected. 2. Use CIT tool to check and rewrite parameters	Controller	
72	9-1	Bad Firmware	The controller cannot be fully started.	The controller firmware is incorrect. 1. CRC or OS mismatch; 2. An incompatible OS was used.	Controller	
73	9-2	EM Brake Failed to Set	After activating the electromagnetic brake and throttle interlock, the slope parking function is triggered.	1. The vehicle operation is detected after setting the electromagnetic brake; 2. The electromagnetic brake fails to stop the motor from rotating after braking.	Controller	
74	9-3	Encoder LOS Mode	LOS Mode	1. Encoder failure of 3-6 or 7-3, entering LOS mode; 2. Motor encoder malfunction. 3. Crimping or wiring error. 4. Vehicle stalled.	Controller	
75	9-4	Emer Rev Timeout	Turn off the throttle and use the electromagnetic brake.	1. Emergency reverse trigger and termination, as the emergency reverse time period expires. 2. The emergency reverse input is stuck.	Controller	
76	9-6	Pump BDI Fault	Turn off pump.	1. The battery level is lower than the low battery lock parameter setting value. 2. BDI parameter setting error.	Controller	
77	9-9	Parameter Mismatch. Fault type: 1. Dual-drive function is turned on in torque mode; 2. The encoder is selected for SPMSM motor feedback; 3. Sine and cosine are selected for AC induction motor feedback.	Turn off the motor, main contactor, electromagnetic brake and throttle, and brake at full power.	1. Incorrect motor feedback selection for a different motor technology application; 2. The dual-drive function is turned on in torque mode; 3. The dual-drive function is turned on when the single controller is applied.	Controller	

78	9-A	Interlock Braking Supervision Fault. Fault types: 1. Motor speed exceeds interlock braking monitoring limit; 2. Interlock disconnected, electromagnetic brake not set within specified time for braking; 3. Interlock disconnected, electromagnetic brake not set, rotor position exceeds RPM limit.	Turn off the motor, electromagnetic brake and main contactor.	1. The motor speed exceeds the set parameter for Interlock Braking Supervision during interlocking braking; 2. Check Programmer/Application Setup/Interlock Braking/Supervision Enable. 3. Check Programmer/Application Setup/Interlock Braking/Interlock Braking Supervision.	Controller	
79	9-B	Emergency Reverse Fault (EMR Supervision) detected	Turn off the motor, electromagnetic brake and main contactor.	1. During the emergency reverse process, the motor speed exceeds the parameters set for Emergency Reverse Supervision; 2. Check Programmer/Application Setup/Emergency Reverse/Emergency Reverse Supervision.	Controller	
80	A-1	Drive 1 Fault. Fault Type: 1. Drive short circuit; 2. Drive overcurrent; 3. Open circuit/short circuit (detected as high, it should be low); 4. Open circuit/short circuit (detected as low, it should be high); 5. Disconnection; 6. The output is limited to no current. Fault types 3-5 require drive fault detection to be enabled.	Turn off the drive 1	1. The driver load is open or short-circuited; 2. The pin or contactor coil of the connector is dirty; 3. Incorrect crimping or wiring of connectors; 4. Drive overcurrent, which exceeds the setting parameter value of Driver 1 Overcurrent; 5. Check Programmer / Controller Setup / Outputs / Driver 1 / Driver 1 Overcurrent.	Controller	
81	A-2	Drive 2 Fault. Fault Type: 1. Drive short circuit; 2. Drive overcurrent; 3. Open circuit/short circuit (detected as high, it should be low); 4. Open circuit/short circuit (detected as low, it should be high); 5. Disconnection; 6. The output is limited to no current. Fault types 3-5 require drive fault detection to be enabled.	Turn off the drive 2	1. The driver load is open or short-circuited; 2. The pin or contactor coil of the connector is dirty; 3. Incorrect crimping or wiring of connectors; 4. Drive overcurrent, which exceeds the setting parameter value of Driver 2 Overcurrent; 5. Check Programmer / Controller Setup / Outputs / Driver 2 / Driver 2 Overcurrent.	Controller	

82	A-3	Drive 3 Fault. Fault Type: 1. Drive short circuit; 2. Drive overcurrent; 3. Open circuit/short circuit (detected as high, it should be low); 4. Open circuit/short circuit (detected as low, it should be high); 5. Disconnection; 6. The output is limited to no current. Fault types 3-5 require drive fault detection to be enabled.	Turn off the drive 3	1. The driver load is open or short-circuited; 2. The pin or contactor coil of the connector is dirty; 3. Incorrect crimping or wiring of connectors; 4. Drive overcurrent, which exceeds the setting parameter value of Driver 3 Overcurrent; 5. Check Programmer / Controller Setup / Outputs / Driver 3 / Driver 3 Overcurrent.	Controller	
83	A-4	Drive 4 Fault. Fault Type: 1. Drive short circuit; 2. Drive overcurrent; 3. Open circuit/short circuit (detected as high, it should be low); 4. Open circuit/short circuit (detected as low, it should be high); 5, Disconnection; 6. The output is limited to no current. Fault types 3-5 require drive fault detection to be enabled.	Turn off the drive 4	1. The driver load is open or short-circuited; 2. The pin or contactor coil of the connector is dirty; 3. Incorrect crimping or wiring of connectors; 4. Drive overcurrent, which exceeds the setting parameter value of Driver 4 Overcurrent; 5. Check Programmer / Controller Setup / Outputs / Driver 4 / Driver 4 Overcurrent.	Controller	
84	A-5	Drive 5 Fault. Fault Type: 1. Drive short circuit; 2. Drive overcurrent; 3. Open circuit/short circuit (detected as high, it should be low); 4. Open circuit/short circuit (detected as low, it should be high); 5. Disconnection; 6. The output is limited to no current. Fault types 3-5 require drive fault detection to be enabled.	Turn off the drive 5	1. The driver load is open or short-circuited; 2. The pin or contactor coil of the connector is dirty; 3. Incorrect crimping or wiring of connectors; 4. Drive overcurrent, which exceeds the setting parameter value of Driver 5 Overcurrent; 5. Check Programmer / Controller Setup / Outputs / Driver 5 / Driver 5 Overcurrent.	Controller	
85	A-6	Drive 6 Fault. Fault Type: 1. Drive short circuit; 2. Drive overcurrent; 3. Open circuit/short circuit (detected as high, it should be low); 4. Open circuit/short circuit (detected as low, it should be high); 5. Disconnection; 6. The output is limited to no current. Fault types 3-5 require drive fault detection to be enabled.	Turn off the drive 6	1. The driver load is open or short-circuited; 2. The pin or contactor coil of the connector is dirty; 3. Incorrect crimping or wiring of connectors; 4. Drive overcurrent, which exceeds the setting parameter value of Driver 6 Overcurrent; 5. Check Programmer / Controller Setup / Outputs / Driver 6 / Driver 6 Overcurrent.	Controller	

86	A-7	Drive 7 Fault. Fault Type: 1. Drive short circuit; 2. Drive overcurrent; 3. Open circuit/short circuit (detected as high, it should be low); 4. Open circuit/short circuit (detected as low, it should be high); 5. Disconnection; 6. The output is limited to no current. Fault types 3-5 require drive fault detection to be enabled.	Turn off the drive 7	1. The driver load is open or short-circuited; 2. The pin or contactor coil of the connector is dirty; 3. Incorrect crimping or wiring of connectors; 4. Drive overcurrent, which exceeds the setting parameter value of Driver 7 Overcurrent; 5. Check Programmer / Controller Setup / Outputs / Driver 7 / Driver 7 Overcurrent.	Controller	
87	A-8	Driver Assignment. Fault type: 5. The serial number of the driver caused the fault.	Turn off the driver.	1. One driver is used for two or more functions. 2. Check Programmer / Controller Setup / IO Assignments / Coil Drivers: Main contactor driver; Electromagnetic brake drive; Pump contactor drive.	Controller	
88	A-9	Coil Supply Fault. Fault type: 1. Short circuit with B- or hardware failure; 2. A short circuit occurs inside the drive, resulting in the power supply of the coil being cut off; 3. The coil power supply startup detection fails; 4. The detection of coil power supply startup prohibition is invalid.	Turn off all outputs of the controller	1. Driver load is short-circuited. 2. Dirty connector pin or contactor coil. 3. Incorrect crimping or wiring of connector. 4. The controller is faulty.	Controller	
89	B-1	Analog input 1 out of range. Fault type: 1. Exceeding the upper limit; 2. Below the lower limit.	None, unless VCL adds a special handling program.	1. The input voltage of analog 1 is higher than the set value of Analog 1 High; 2. The input voltage of analog 1 is lower than the set value of Analog 1 Low; 3. Check Programmer / Controller Setup / Analog Inputs / Analog 1; 4. Check Programmer / Controller Setup / Analog Inputs / Configure / Analog 1 Low/Analog 1 High.	Controller	

90	B-2	Analog input 2 out of range. Fault type: 1 Exceeding the upper limit; 2. Below the lower limit.	None, unless VCL adds a special handling program.	1. The input voltage of analog 2 is higher than the set value of Analog 2 High; 2. The input voltage of analog 2 is lower than the set value of Analog 2 Low; 3. Check Programmer / Controller Setup / Analog Inputs / Analog 2; 4. Check Programmer / Controller Setup / Analog Inputs / Configure / Analog 2 Low/Analog 2 High.	Controller	
91	B-3	Analog input 3 out of range. Fault type: 1. Exceeding the upper limit; 2. Below the lower limit.	None, unless VCL adds a special handling program.	1. The input voltage of analog 3 is higher than the set value of Analog 3 High; 2. The input voltage of analog 3 is lower than the set value of Analog 3 Low; 3. Check Programmer / Controller Setup / Analog Inputs / Analog 3; 4. Check Programmer / Controller Setup / Analog Inputs / Configure / Analog 3 Low/Analog 3 High.	Controller	
92	B-4	Analog input 4 out of range. Fault type: 1. Exceeding the upper limit; 2. Below the lower limit.	None, unless VCL adds a special handling program.	1. The input voltage of analog 4 is higher than the set value of Analog 4 High; 2. The input voltage of analog 4 is lower than the set value of Analog 4 Low; 3. Check Programmer / Controller Setup / Analog Inputs / Analog 4; 4. Check Programmer / Controller Setup / Analog Inputs / Configure / Analog 4 Low/Analog 4 High.	Controller	
93	B-5	Analog input 5 out of range. Fault type: 1. Exceeding the upper limit; 2. Below the lower limit.	None, unless VCL adds a special handling program.	1. The input voltage of analog 5 is higher than the set value of Analog 5 High; 2. The input voltage of analog 5 is lower than the set value of Analog 5 Low; 3. Check Programmer / Controller Setup / Analog Inputs / Analog 5; 4. Check Programmer / Controller Setup / Analog Inputs / Configure / Analog 5 Low/Analog 5 High.	Controller	

94	B-6	Analog input 6 out of range. Fault type: 1. Exceeding the upper limit; 2. Below the lower limit.	None, unless VCL adds a special handling program.	1. The input voltage of analog 6 is higher than the set value of Analog 6 High; 2. The input voltage of analog 6 is lower than the set value of Analog 6 Low; 3. Check Programmer / Controller Setup / Analog Inputs / Analog 6; 4. Check Programmer / Controller Setup / Analog Inputs / Configure / Analog 6 Low/Analog 6 High.	Controller	
95	B-7	Analog input 7 out of range. Fault type: 1. Exceeding the upper limit; 2. Below the lower limit.	None, unless VCL adds a special handling program.	1. The input voltage of analog 1 is higher than the set value of Analog 7 High; 2. The input voltage of analog 7 is lower than the set value of Analog 7 Low; 3. Check Programmer / Controller Setup / Analog Inputs / Analog 7; 4. Check Programmer / Controller Setup / Analog Inputs / Configure / Analog 7 Low/Analog 7 High.	Controller	
96	B-8	Analog input 8 out of range. Fault type: 1. Exceeding the upper limit; 2. Below the lower limit.	None, unless VCL adds a special handling program.	1. The input voltage of analog 8 is higher than the set value of Analog 8 High; 2. The input voltage of analog 8 is lower than the set value of Analog 8 Low; 3. Check Programmer / Controller Setup / Analog Inputs / Analog 8; 4. Check Programmer / Controller Setup / Analog Inputs / Configure / Analog 8 Low/Analog 8 High.	Controller	
97	B-9	Analog input 9 out of range. Fault type: 1. Exceeding the upper limit; 2. Below the lower limit.	None, unless VCL adds a special handling program.	1. The input voltage of analog 9 is higher than the set value of Analog 9 High; 2. The input voltage of analog 9 is lower than the set value of Analog 9 Low; 3. Check Programmer / Controller Setup / Analog Inputs / Analog 9; 4. Check Programmer / Controller Setup / Analog Inputs / Configure / Analog 9 Low/Analog 9 High.	Controller	

98	B-B	Analog input 14 out of range. Fault type: 1. Exceeding the upper limit; 2. Below the lower limit.	None, unless VCL adds a special handling program.	1. The input voltage of analog 14 is higher than the set value of Analog 14 High; 2. The input voltage of analog 14 is lower than the set value of Analog 14 Low; 3. Check Programmer / Controller Setup / Analog Inputs / Analog 14; 4. Check Programmer / Controller Setup / Analog Inputs / Configure / Analog 14 Low/Analog 14 High.	Controller	
99	B-C	Analog Assignment Fault. Fault type: 9. The serial number of the analog caused the fault.	None, unless VCL adds a special handling program.	1. One analog quantity is used for two or more functions; 2. One analog input is out of range; 3. Check Programmer / Controller Setup / IO Assignments / Controls.	Controller	
100	B-D	Analog input 18 out of range. Fault type: 1. Exceeding the upper limit; 2. Below the lower limit.	None, unless VCL adds a special handling program.	1. The input voltage of analog 18 is higher than the set value of Analog 18 High; 2. The input voltage of analog 18 is lower than the set value of Analog 18 Low; 3. Check Programmer / Controller Setup / Analog Inputs / Analog 18; 4. Check Programmer / Controller Setup / Analog Inputs / Configure / Analog 18 Low/Analog 18 High.	Controller	
101	B-E	Analog input 19 out of range. Fault type: 1. Exceeding the upper limit; 2. Below the lower limit.	None, unless VCL adds a special handling program.	1. The input voltage of analog 19 is higher than the set value of Analog 19 High; 2. The input voltage of analog 19 is lower than the set value of Analog 19 Low; 3. Check Programmer / Controller Setup / Analog Inputs / Analog 19; 4. Check Programmer / Controller Setup / Analog Inputs / Configure / Analog 19 Low/Analog 19 High.	Controller	
102	C-1	Branding Error	Turn off the motor, main contactor, electromagnetic brake and throttle, and brake at full power.	1. Software and hardware brands do not match; 2. Contact local Curtis technical support to resolve the issue.	Controller	

103	C-2	BMS Cutback. 1. The battery current decreases; 2. Insufficient voltage reduction in battery cells; 3. Excessive voltage reduction in battery cells.	None, unless VCL adds a special handling program.	Resolve battery issues.	Battery	
104	C-5	PWM Input 10 Out of Range	None, unless VCL adds a special handling program.	Reset the controller by restoring the voltage to the allowable range.	Controller	
105	C-7	Analog input 31 out of range. Fault type: 1. Exceeding the upper limit; 2. Below the lower limit.	None, unless VCL adds a special handling program.	1. The input voltage of analog 14 is higher than the set value of Analog 31 High; 2. The input voltage of analog 14 is lower than the set value of Analog 31 Low; 3. Check Programmer / Controller Setup / Analog Inputs / Analog 31; 4. Check Programmer / Controller Setup / Analog Inputs / Configure / Analog 31 Low/Analog 31 High.	Controller	
106	C-8	Invalid CAN Port	No action	1. Mistuned dual driver CAN parameters; 2. CAN node ID conflicts due to dual drive.	Controller	
107	C-9	VCL Watchdog	No action	Kick_Watchdog(). Start and reset the specified watchdog timer.	Controller	
108	C-B	PWM Input 28 Out of Range. 1. The input is disconnected; 2. The measured input frequency is lower than (PWM_Input_28_Low_Frequency)-(PWM_Frequency Input_28_Frequency_Fault_Tolerance); 3. The measured input frequency is higher than (PWM_Input_28_High_Frequency) +(PWM_Input_28_Frequency_Fault_Tolerance); 4. The measured duty cycle is lower than the set limit, (PWM_Input_28_Low_Duty_Cycle) -(PWM_Input_28_Duty_Cycle_Fault_Tolerance); 5. The measured duty cycle is higher than the set limit, (PWM_Input_28_High_Duty_Cycle) + (PWM_Input_28_Duty_Cycle_Fault_Tolerance).	None, unless VCL adds a special handling program.	1. The execution cycle for this fault diagnosis is every 4 milliseconds. If no PWM signal is generated within 16 milliseconds, or if the measured value is not updated every 16 milliseconds, the input is considered disconnected. 2. Parameter imbalance; 3. Wiring error	Controller	

109	C-C	PWM Input 29 Out of Range. 1. The input is disconnected; 2. The measured input frequency is lower than (PWM_Input_29_Low_Frequency)-(PWM_Frequency Input_29_Frequency_Fault_Tolerance); 3. The measured input frequency is higher than (PWM_Input_29_High_Frequency) +(PWM_Input_29_Frequency_Fault_Tolerance); 4. The measured duty cycle is lower than the set limit, (PWM_Input_29_Low_Duty_Cycle) -(PWM_Input_29_Duty_Cycle_Fault_Tolerance); 5. The measured duty cycle is higher than the set limit, (PWM_Input_29_High_Duty_Cycle) + (PWM_Input_29_Duty_Cycle_Fault_Tolerance).	None, unless VCL adds a special handling program.	1. The execution cycle for this fault diagnosis is every 4 milliseconds. If no PWM signal is generated within 16 milliseconds, or if the measured value is not updated every 16 milliseconds, the input is considered disconnected. 2. Parameter imbalance; 3. Wiring error	Controller	

110	C-D	Primary State Error. These are internal problems that occur during startup, parameter initialization, secondary micro-update or other runtime problems. 1 = PRIMARY_DEVICE_STARTUP = 0, 2 = PRIMARY_WAIT_KSI_STABLE, 3 = PRIMARY_DEVICE_STARTUP_VALID, 4 = PRIMARY_INITIALIZE_PARAMETERS, 5 = PRIMARY_WAIT_FOR_FIRST_SIGNALS, 6 = PRIMARY_WAIT_FOR_SUPERVISOR, 7 = PRIMARY_RESTORE_PARAMETER_FAIL, 8 = PRIMARY_SUPERVISOR_FIRST_SIGNALS_ERROR, 9 = PRIMARY_SUPERVISOR_STARTUP_ERROR, 10 = PRIMARY_STARTUP_TIMER_FAILURE, 11 = PRIMARY_WAIT_CAN_HANDSHAKING_DONE, 12 = PRIMARY_RUNNING	The controller is inoperable.	Internal error in controller, please reset the controller.	Controller	
111	D-1	Lift Input Fault	Turn off lift	The fault diagnosis associated with the lift input source will trigger the fault. For example, if the lift input source is an analog input, all faults related to that analog input will be collected into that fault and reported Cleared: any allocation conflicts will be resolved, or the input will exceed the range, and then the controller will be reset.	Controller	
112	D-2	Phase PWM Mismatch. 0 = U phase. 1 = V phase. 2 = W phase.	Turn off the motor, main contactor, electromagnetic brake, throttle, and brake at full power, turn off the oil pump.	The difference between the measured phase PWM duty cycle and the measured phase PWM duty cycle is greater than the allowable value. Clear: reset controller	Controller	

113	D-3	Hardware Compatibility Fault	Turn off the motor, main contactor, electromagnetic brake, throttle, and brake at full power, turn off the oil pump.	Incompatible OS and controller; The downloaded software and controller hardware are incompatible.	Controller	
114	D-4	Lower Input Fault	Turn off Lower	The fault diagnosis associated with the Lower input source will trigger the fault. For example, if the Lower input source is an analog input, all faults related to that analog input will be collected into that fault and reported Cleared: any allocation conflicts will be resolved, or the input will exceed the range, and then the controller will be reset.	Controller	
115	D-6	Hazardous Movement. 1=The motor speed is opposite to the required speed direction, and the motor cannot accelerate in the correct direction within the time set by the program. If the programming time for the motor to accelerate to zero speed is changed to neutral, this hazardous will be detected. 2=The direction of the difference between the acceleration and the operator's speed requirements and the motor speed will be opposite. A parameter in the program time (Hazardous_Throttle_Response_Time) where the speed in the instruction direction is greater than the instruction speed by more than one parameter (Hazard_Speed)	Turn off interlock.	When the motor is required to move, the fault detects hazardous movement. The first danger is that if the throttle drops to zero or the direction switch is not in the driving direction, the motor will not be able to slow down. The second danger is that the motor accelerates in the wrong direction or too fast. Note: This fault only occurs when the control mode is selected in Speed_Mode, Speed_Mode_Express or Servo_Mode. Clear: Resets the controller. Set Discoverous_Direction_Response_Time=0 will disable these checks.	Controller	
116	D-D	IMU Failure. 1=SPI communication failure; 2=Curtis factory self inspection failure; 3=runtime check fault, incorrect data received from IMU; 4=The calibration test of the gyroscope is out of range, with a maximum calibration deviation exceeding.	No action	Check whether the configuration is correct or whether the vehicle is moving during calibration. Restart the key switch.	Controller	

F4A Drive Controller (Secondary) Fault Code Table

Serial number	The instrument/controller displays fault codes.	Fault Name	Fault Description	Cause or Solution	Fault Source	Remarks
1	1-2	Controller Overcurrent Fault types: 1 = U-phase over current 2 = W-phase over current 3 = V-phase over current 4 = controller current > 135% current limit value.	Turn off the motor, main contactor, electromagnetic brake and throttle, and brake at full power.	1. The external connection of U, V and W phases of the motor is short-circuited; 2. The encoder signal of the motor is disturbed; 3. The motor parameters are misadjusted; 4. The controller is faulty.	Controller	
2	1-3	Current Sensor Fault type: 1	Turn off the motor, main contactor, electromagnetic brake and throttle, and brake at full power.	1. Leakage from U, V or W phase to vehicle body (short circuit in stator) 2. Controller failure 3. Replace controller.	Controller	
3	1-4	Precharge Failed Fault type: 1. Interrupt 2. Energy limit 3. Time limit	Turn off the motor, main contactor, electromagnetic brake and throttle, and brake at full power.	1. The load connected to the B+terminal of the controller suppresses the internal capacitor charging of the controller. 2. Check the voltage displayed on the Programmer \ System Monitor Menu \ Controller \ Capacitor Voltage. 3. Replace the controller.	Controller	
4	1-5	Controller Severe Undertemp	Turn off the motor, main contactor, electromagnetic brake and throttle, and brake at full power.	1. The controller operates in extreme environments. 2. Check the temperature displayed on the Programmer \ System Monitor Menu \ Controller \ Controller Temperature. If the temperature rises to -40℃ or above, restart the key switch or interlock switch. If it fails, replace the controller;	Controller	
5	1-6	Controller Severe Overtemp	Turn off the motor, main contactor, electromagnetic brake, throttle, and perform full power electric braking.	1. The controller works in extreme environment; 2. The load is too heavy; 3. The installation of the controller is unreasonable; 4. Check the temperature displayed by the programmer \ system monitor menu \ controller \ controller temperature. Reduce the temperature to below 95℃. Restart the key switch or interlock switch; if it fails, replace the controller;	Controller	

6	1-7	Severe B+ Undervoltage	No drive torque outputs	1. The battery is exhausted by the non-controller system; 2. The internal resistance of the battery is too high; 3. The battery is not connected when the motor is driven; 4. The fuse connected to B+ is blown or the main contactor is not attracted; 5. The battery parameters of the controller are set incorrectly; 6. Check the voltage displayed by the programmer \ system monitor menu \ controller \ capacitor voltage.	Controller	
7		Severe KSI Undervoltage	None, unless there are specific measures in VCL software.	1. The battery of the non-controller system is exhausted; 2. The resistance of the KSI input line is too high; 3. When the motor is driven, the KSI line is disconnected; 4. The fuse is blown; 5. Check the voltage displayed by the programmer \ system monitor menu \ controller \ key switch voltage.	Controller	
8	1-8	Severe B+ Overvoltage	Turn off the motor, main contactor, electromagnetic brake and throttle, and brake at full power.	1. The battery parameters of the controller are set incorrectly. 2. Regenerative braking. When the battery is recharged with current, the internal resistance of the battery is too high. 3. The battery is not connected during regenerative braking. 4. Check the voltage displayed by Programmer \ System Monitor Menu \ Controller \ Capacitor Voltage.	Controller	
9		Severe KSI Overvoltage	Turn off the motor, main contactor, electromagnetic brake and throttle, and brake at full power.	1. The battery voltage at KSI(pin1) terminal of the controller exceeds the set value of severe high voltage. 2. Check the voltage displayed by programmer \ system monitor menu \ controller \ key switch voltage.	Controller	
10	1-9	Speed limit failure detected.	Turn off the interlock and electromagnetic brakes.	1. It is detected that the motor speed exceeds the Max Speed Supervision setting. 2. The Max Speed Supervision setting value is incorrect. 3. Check the values of Programmer\Application Setup\Max Speed Supervision settings	Controller	

11	1-A	Motor not stopped 1 = the motor moved more revolutions than the parameter, Motor_Not_Stopped_Position_Error setting. The motor turns more than the set parameter (Motor_Not_Stopped_Position_Error). 2 = the motor moved faster than the parameter Motor_Not_Stopped_Speed_Error (RPM) for 160ms. The motor rotates faster than the parameter Motor_Not_Stopped_Speed_Error (RPM) for 160ms. 3 = The three-phase drive has applied an electrical frequency greater than the Motor_Not_Stopped_Max_Frequency parameter, and applied an RMS current greater than the Motor_Not_Stopped_Max_Current parameter for 64ms. Three-phase drive applies a parameter that the electrical frequency is greater than the frequency parameter set in Motor_Not_Stopped_Max_Frequency and the effective current applied in 64ms is greater than the parameter set in Motor_Not_Stopped_Max_Current.	Turn off the motor, main contactor, electromagnetic brake, throttle, oil pump and brake at full power.	1. Motor Not Stopped. Maladjustment. 2. View: Programmer » Application Setup » Motor not stopped menu. 3. Failure or conflict of internal controller, which makes the motor rotate when it stops.	Controller	
12	1-B	Critical OS General (<100) Internal Fault. Contact Curtis support. (>100) An ill-formed or corrupted application package was loaded into controller.	Turn off the motor, main contactor, electromagnetic brake, throttle, interlock, drive 1, drive 2, drive 3, drive 4, drive 5, drive 6, drive 7, proportional drive, oil pump, coil power supply and brake at full power.	1. (<100) Internal failure. 2. (>100) CIT version is too old to fully support FOS version.	Controller	
13	1-C	OS General 2 (<100) Internal Fault. Contact Curtis support. (>100) An ill-formed or corrupted application package was loaded into controller.	The controller is inoperable.	1. (<100) Internal failure. 2. (>100) CIT version is too old to fully support FOS version.	Controller	
14	1-D	Reset Rejected	Turn off the interlock and throttle.	Restart key switch	Controller	
15	1-E	Motor short-circuiting	The controller is inoperable.	Reset controller	Controller	

16	2-2	Controller Overtemp Cutback	Reduce driving and braking torque.	1. The controller works in extreme environment; 2. The load is too heavy; 3. The installation of the controller is unreasonable; 4. The performance of the controller is limited at this temperature. 5. Check the temperature displayed by the programmer \ system monitor menu \ controller \ controller temperature. Reduce the temperature to below 85℃. Restart the key switch or interlock switch; if it fails, replace the controller;	Controller	
17	2-3	Undervoltage Cutback	Reduce driving torque	1. The battery needs to be charged, and the performance of the controller is limited at this voltage. 2. The parameters of the controller battery are set incorrectly. 3. The non-controller system runs out of batteries. 4. The internal resistance of the battery is too high. 5. The battery is not connected when driving the motor. 6. The fuse connecting B+ is blown or the main contactor is not attracted. 7. Check the programmer\system monitor menu\controller\currents\undervoltage cutback. 8. Check the voltage displayed by programmer\system monitor menu\controller\capacitor voltage.	Controller	

18	2-4	Overvoltage Cutback	Reduce the braking torque. Note: This fault can only be detected during regenerative braking.	1. During normal operation, the current generated by regenerative braking is recharged to the battery, and the battery voltage is too high, resulting in failure, and the performance of the controller is limited at this voltage. 2. The battery parameters of the controller are set incorrectly. 3. Regenerative braking. When the battery is recharged with current, the internal resistance of the battery is too high. 4. During regenerative braking, the battery is not connected. 5. Check Programmer\System Monitor Menu\Controller\Currents\ Overvoltage Cutback. 6. Check the voltage displayed by programmer\system monitor menu\controller\capacitor voltage.	Controller	
19	2-5	Ext 5V Supply Failure. Failure type: 1. The output voltage of 5V is out of range. 2. The current of 5V voltage is out of range.	Turn off the 5V output	1. The external 5V load is too small (pin 16). 2. Check the voltage and current of 5V output displayed by programmer\system monitor menu\outputs.	Controller	
20	2-6	Ext 12V Supply Failure. Failure type: 1. The output voltage of 12V is out of range. 2. The current of 12V voltage is out of range.	Turn off the 12V output	1. The external 12V load is too small (pin 23). 2. Check the voltage and current of 12V output displayed by programmer\system monitor menu\outputs.	Controller	
21	2-8	Motor Temp Hot Cutback	1. Reduce the driving torque. 2. If MotorBrakingThermal CutBack_Enable = On, reduce the braking torque.	1. The motor temperature is greater than or equal to the set value of Temperature Hot, which causes the controller to output current limit. 2. The motor temperature and sensor parameters are set incorrectly. 3. Check programmer \ AC motor setup \ temperature sensor.	Controller	
22	2-9	Motor Temp Sensor	Enter the LOS mode, reduce the motor speed, and turn off the high position reduction function of the motor.	1. The temperature sensor of the motor is not connected properly; 2. The polarity of the sensor is not connected correctly (pin 9 and pin 12). 3. The temperature of the motor and the sensor parameters are set incorrectly. 4. Check the programmer\system monitor menu\AC motor\temperature.	Controller	

23	3-1	Main contactor drive fault (Main Driver). Fault Type: 1. Drive Short Circuit. 2. Drive Overcurrent. 3. Open/Short Circuit (High detected, should be Low). 4. Open/Short Circuit (Low detected, should be High). 5. Disconnect	Turn off the motor, main contactor, electromagnetic brake and throttle, and brake at full power.	1. Driver load is open or short-circuited. 2. Dirty connector pin or contactor coil. 3. Incorrect crimping or wiring of connector.	Controller	
24	3-2	EM Brake Driver Fault. Fault Type: 1. Drive Short Circuit. 2. Drive Overcurrent. 3. Open/Short Circuit (High detected, should be Low). 4. Open/Short Circuit (Low detected, should be High). 5. Disconnect	Turn off the electromagnetic brake, throttle, and brake at full power.	1. Driver load is open or short-circuited. 2. Dirty connector pin or contactor coil. 4. Incorrect crimping or wiring of connector.	Controller	
25	3-4	Load Hold Driver Fault	Close the currently assigned driver	Equivalent to Driver 1 Fault	Controller	
26	3-5	Lower Driver Fault	Close the currently assigned driver	Equivalent to Driver 1 Fault	Controller	
27	3-6	Encoder Fault. Fault type: 1. Verification loss. 2. Overcurrent leads to pulse loss. 3. Loss of speed pulse signal. 4. Motor matching. 5. The power supply part of the encoder is faulty.	Turn off the electromagnetic brake, throttle, and brake at full power.	1. Motor encoder fails. 2. Crimping or wiring error. 3. Check programmer\system monitor menu\AC motor\motor rpm. 4. Check Programmer\AC Motor Setup\Quadrature Encoder\Encoder Fault Setup. 5. Check programmer\system monitor menu\hardware inputs: Analog 3 and 4.	Controller	
28	3-7	Motor Open Circuit	Turn off the motor, main contactor, electromagnetic brake and throttle, and brake at full power.	1. Open circuit of motor phase. 2. Wrong crimping or wiring.	Controller	
29	3-8	Main Contactor Welded	Turn off the motor, main contactor, electromagnetic brake and throttle, and brake at full power.	1. The contact of the main contactor is always welded; 2. The V-phase or U-phase of the motor is open; 3. External voltage is directly connected to the B+ terminal of the controller.	Controller	

30	3-9	Main Contactor Did Not Close. Fault type: 1. After the control command is given, the main contactor does not close. 2. When working, the main contactor is disconnected.	Turn off the motor, main contactor, electromagnetic brake and throttle, and brake at full power.	Type 1: 1. The main contactor did not close. 2. The contact of the main contactor is defective. 3. The controller B+ terminal is externally connected with a heavy load, which leads to the inability to effectively charge the capacitor. 4. The large-current fuse is blown. 5. The main contactor parameter is set incorrectly. Type 2: 1. The main contactor is disconnected during operation 2. The contactor coil is disconnected. 3. The contactor is faulty.	Controller	
31	4-2	Throttle input fault. Fault type: 1. The external input is too low or too high.	Turn off the throttle.	1. The input voltage of the throttle exceeds the range set by Analog Low and Analog High, and the corresponding analog input is defined as the throttle input. 2. Check Programmer\Controller Setup\Analog Inputs\Analog 1 Type 3. Check Programmer\Controller Setup\Analog Inputs\Configure	Controller	
32	4-4	Brake Input Fault	Full power braking	The corresponding fault triggered by the brake input source (assigned analog input). Note: Input troubleshooting may also be an input voltage out of range.	Controller	
33	4-6	NV Memory Failure. Fault type: 1. Invalid check; 2. Error in writing data; 3. Data reading error; 4. Data writing was not completed due to power failure.	Turn off the motor, main contactor, electromagnetic brake, throttle, interlock, drive 1, drive 2, drive 3, drive 4, drive 5, proportional drive and brake at full power.	1. NV Memory Failure. 2. Internal failure of controller.	Controller	

34	4-7	HPD Sequencing Protection	Turn off the throttle.	1. The sequence of key switch, interlock, direction switch and throttle input operation is incorrect; 2. Incorrect wiring or crimping of key switch, interlock, direction switch and throttle input; 3. The key switch, interlock, direction switch and accelerator input are damp; 4. Check the programmer \ system monitor menu \ inputs \ switch status; 5. Check the programmer \ system monitor menu \ inputs \ throttle command.	Controller	
35		EMR Rev HPD	Turn off the throttle and use the electromagnetic brake.	The emergency reverse operation has ended, but the throttle input, direction switch, and interlock have not returned to their original positions.	Controller	
36		Pump HPD Protection. Fault type: 1. Only lifting; 2, Only lowering; 3. Lifting and lowering.	Turn off pump.	Incorrect input conditions for lifting/lowering throttle (>25%). Parameter setting error: 1. Hydraulic suppression type; 2. HPD/SRO determines hardware failure of the oil pump accelerator.	Controller	
37	4-9	Parameter Change Fault. Fault type: CAN ID of recording parameter.	Turn off the motor, main contactor, electromagnetic brake and throttle, and brake at full power.	After the interlock is closed, modify the safety-related parameters (the parameters marked with PCF).	Controller	
38	4-A	EMR Switch Redundancy Fault	Turn off the interlock and use the electromagnetic brake.	1. One or two of the emergency reverse switches do not work, resulting in an invalid state. 2. The switch is wet or dirty.	Controller	
39	5-1	MNG PDO Timeout	Turn off the motor, main contactor, electromagnetic brake and throttle, and brake at full power.	Solve the communication problems with the controller (matching, protocol, line, etc.)	Controller	
40	7-1	OS General	Turn off all	Reset controller	Controller	

41	7-2	PDO Timeout	Trigger: The time for two adjacent PDOs to receive information exceeds the set PDO timeout. Clear: received the CAN NMT information or reset the controller.	1. The time for two adjacent PDOs to receive information exceeds the set PDO timeout. 2. Adjust the PDO settings and view Programmer/Application Setup/CAN Interface/PDO Setups.	Controller	
42	7-3	Motor Stall Detected	Turn off the motor, electromagnetic brake and throttle, change the control mode to LOS, and the motor output is limited.	1. The motor is stalled; 2. The motor encoder is invalid; 3. Wrong crimping or wiring; 4. The power supply part of the motor encoder is abnormal; 5. Check the Programmer\System Monitor Menu\AC Motor\Motor RPM.	Controller	
43	7-7	Supervision Fault. Fault type: Curtis monitoring code	Turn off the motor, main contactor, electromagnetic brake, throttle, interlock, drive 1, drive 2, drive 3, drive 4, drive 5, proportional drive and brake at full power.	Controller Internal Fault	Controller	
44	7-9	Supervision Input Check Fault	Turn off the motor, main contactor, electromagnetic brake, throttle, interlock, drive 1, drive 2, drive 3, drive 4, drive 5, proportional drive and brake at full power.	Controller Internal Fault	Controller	
45	8-2	PDO Mapping Error	Turn off PDO	1. There are too many data bits in PDO mapping, or the target is incompatible; 2. Adjust PDO settings and check Programmer/Application Setup/CAN Interface/PDO Setups.	Controller	
46	8-3	Internal Hardware Fault. Fault type: Curtis hardware code.	Turn off the motor, main contactor, electromagnetic brake and throttle, and brake at full power.	Internal fault detected in the controller.	Controller	

47	8-4	Motor Braking Impaired	Turn off the motor, main contactor, electromagnetic brake and throttle, and brake at full power.	Battery overcharge, motor or controller overheating, or inappropriate parameters. Reset the interlock pedal	Controller	
48	8-7	Motor characterization error. Fault type: 71. Failure to write to memory RAM; 72. Temperature sensor malfunction; 73. Motor overheating; 74. Temperature reduction of the controller; 76. Low pressure reduction; 77. High pressure reduction; 78. No encoder signal; 79. The current verification is out of range; 80. The current verification is out of range; 81. Can detect encoder signals, but cannot automatically detect the number of pulses per revolution (encoder steps); 82. Automatic matching failed; 90/98, unable to detect feedback sine/cosine signals from permanent magnet synchronous motors; 91. Permanent magnet synchronous motor does not rotate; 92. Permanent magnet synchronous motors do not accelerate or experience low acceleration; 94-97. Delay compensation of permanent magnet synchronous motor exceeds the range; 99. The permanent magnet synchronous motor rotates at the beginning of matching; 102. Temperature sensor failure of permanent magnet synchronous motor; 103. High temperature reduction of permanent magnet synchronous motors; 104. Temperature reduction of permanent magnet synchronous motor controller; 106. Low voltage reduction of permanent magnet synchronous motor controller; 107. High voltage reduction of permanent magnet synchronous motor controller.	Turn off the motor, main contactor, electromagnetic brake and throttle, and brake at full power.	Motor matching failed during motor matching process.	Controller	

49	8-8	Encoder Pulse Error	Turn off the motor, main contactor, electromagnetic brake and throttle, and brake at full power.	1. The encoder step setting does not match the actual value; 2. Verify parameter settings and check the Programmer \ AC Motor Setup \ Quadrature Encoder \ Encoder Steps; 3. When the motor loses IFO control and there is no accelerator signal input, the motor accelerates and rotates.	Controller	
50	8-9	Parameter Out of Range. Fault type: Record the target CAN ID.	Turn off the motor, main contactor, electromagnetic brake and throttle, and brake at full power.	1. Parameter value out of range detected. 2. Use CIT tool to check and rewrite parameters	Controller	
51	9-1	Bad Firmware	The controller cannot be fully started.	The controller firmware is incorrect. 1. CRC or OS mismatch; 2. An incompatible OS was used.	Controller	
52	9-2	EM Brake Failed to Set	After activating the electromagnetic brake and throttle interlock, the slope parking function is triggered.	1. The vehicle operation is detected after setting the electromagnetic brake; 2. The electromagnetic brake fails to stop the motor from rotating after braking.	Controller	
53	9-3	Encoder LOS Mode	LOS Mode	1. Encoder failure of 3-6 or 7-3, entering LOS mode; 2. Motor encoder malfunction. 3. Crimping or wiring error. 4. Vehicle stalled.	Controller	
54	9-4	Emer Rev Timeout	Turn off the throttle and use the electromagnetic brake.	1. Emergency reverse trigger and termination, as the emergency reverse time period expires. 2. The emergency reverse input is stuck.	Controller	
55	9-6	Pump BDI Fault	Turn off pump.	1. The battery level is lower than the low battery lock parameter setting value. 2. BDI parameter setting error.	Controller	
56	9-9	Parameter Mismatch. Fault type: 1. Dual-drive function is turned on in torque mode; 2. The encoder is selected for SPMSM motor feedback; 3. Sine and cosine are selected for AC induction motor feedback.	Turn off the motor, main contactor, electromagnetic brake and throttle, and brake at full power.	1. Incorrect motor feedback selection for a different motor technology application; 2. The dual-drive function is turned on in torque mode; 3. The dual-drive function is turned on when the single controller is applied.	Controller	

57	9-A	Interlock Braking Supervision Fault. Fault types: 1. Motor speed exceeds interlock braking monitoring limit; 2. Interlock disconnected, electromagnetic brake not set within specified time for braking; 3. Interlock disconnected, electromagnetic brake not set, rotor position exceeds RPM limit.	Turn off the motor, electromagnetic brake and main contactor.	1. The motor speed exceeds the set parameter for Interlock Braking Supervision during interlocking braking; 2. Check Programmer/Application Setup/Interlock Braking/Supervision Enable. 3. Check Programmer/Application Setup/Interlock Braking/Interlock Braking Supervision.	Controller	
58	9-B	Emergency Reverse Fault (EMR Supervision) detected	Turn off the motor, electromagnetic brake and main contactor.	1. During the emergency reverse process, the motor speed exceeds the parameters set for Emergency Reverse Supervision; 2. Check Programmer/Application Setup/Emergency Reverse/Emergency Reverse Supervision.	Controller	
59	A-1	Drive 1 Fault. Fault Type: 1. Drive short circuit; 2. Drive overcurrent; 3. Open circuit/short circuit (detected as high, it should be low); 4. Open circuit/short circuit (detected as low, it should be high); 5. Disconnection; 6. The output is limited to no current. Fault types 3-5 require drive fault detection to be enabled.	Turn off the drive 1	1. The driver load is open or short-circuited; 2. The pin or contactor coil of the connector is dirty; 3. Incorrect crimping or wiring of connectors; 4. Drive overcurrent, which exceeds the setting parameter value of Driver 1 Overcurrent; 5. Check Programmer / Controller Setup / Outputs / Driver 1 / Driver 1 Overcurrent.	Controller	
60	A-2	Drive 2 Fault. Fault Type: 1. Drive short circuit; 2. Drive overcurrent; 3. Open circuit/short circuit (detected as high, it should be low); 4. Open circuit/short circuit (detected as low, it should be high); 5. Disconnection; 6. The output is limited to no current. Fault types 3-5 require drive fault detection to be enabled.	Turn off the drive 2	1. The driver load is open or short-circuited; 2. The pin or contactor coil of the connector is dirty; 3. Incorrect crimping or wiring of connectors; 4. Drive overcurrent, which exceeds the setting parameter value of Driver 2 Overcurrent; 5. Check Programmer / Controller Setup / Outputs / Driver 2 / Driver 2 Overcurrent.	Controller	

61	A-3	Drive 3 Fault. Fault Type: 1. Drive short circuit; 2. Drive overcurrent; 3. Open circuit/short circuit (detected as high, it should be low); 4. Open circuit/short circuit (detected as low, it should be high); 5. Disconnection; 6. The output is limited to no current. Fault types 3-5 require drive fault detection to be enabled.	Turn off the drive 3	1. The driver load is open or short-circuited; 2. The pin or contactor coil of the connector is dirty; 3. Incorrect crimping or wiring of connectors; 4. Drive overcurrent, which exceeds the setting parameter value of Driver 3 Overcurrent; 5. Check Programmer / Controller Setup / Outputs / Driver 3 / Driver 3 Overcurrent.	Controller	
62	A-4	Drive 4 Fault. Fault Type: 1. Drive short circuit; 2. Drive overcurrent; 3. Open circuit/short circuit (detected as high, it should be low); 4. Open circuit/short circuit (detected as low, it should be high); 5, Disconnection; 6. The output is limited to no current. Fault types 3-5 require drive fault detection to be enabled.	Turn off the drive 4	1. The driver load is open or short-circuited; 2. The pin or contactor coil of the connector is dirty; 3. Incorrect crimping or wiring of connectors; 4. Drive overcurrent, which exceeds the setting parameter value of Driver 4 Overcurrent; 5. Check Programmer / Controller Setup / Outputs / Driver 4 / Driver 4 Overcurrent.	Controller	
63	A-5	Drive 5 Fault. Fault Type: 1. Drive short circuit; 2. Drive overcurrent; 3. Open circuit/short circuit (detected as high, it should be low); 4. Open circuit/short circuit (detected as low, it should be high); 5. Disconnection; 6. The output is limited to no current. Fault types 3-5 require drive fault detection to be enabled.	Turn off the drive 5	1. The driver load is open or short-circuited; 2. The pin or contactor coil of the connector is dirty; 3. Incorrect crimping or wiring of connectors; 4. Drive overcurrent, which exceeds the setting parameter value of Driver 5 Overcurrent; 5. Check Programmer / Controller Setup / Outputs / Driver 5 / Driver 5 Overcurrent.	Controller	
64	A-6	Drive 6 Fault. Fault Type: 1. Drive short circuit; 2. Drive overcurrent; 3. Open circuit/short circuit (detected as high, it should be low); 4. Open circuit/short circuit (detected as low, it should be high); 5. Disconnection; 6. The output is limited to no current. Fault types 3-5 require drive fault detection to be enabled.	Turn off the drive 6	1. The driver load is open or short-circuited; 2. The pin or contactor coil of the connector is dirty; 3. Incorrect crimping or wiring of connectors; 4. Drive overcurrent, which exceeds the setting parameter value of Driver 6 Overcurrent; 5. Check Programmer / Controller Setup / Outputs / Driver 6 / Driver 6 Overcurrent.	Controller	

65	A-7	Drive 7 Fault. Fault Type: 1. Drive short circuit; 2. Drive overcurrent; 3. Open circuit/short circuit (detected as high, it should be low); 4. Open circuit/short circuit (detected as low, it should be high); 5. Disconnection; 6. The output is limited to no current. Fault types 3-5 require drive fault detection to be enabled.	Turn off the drive 7	1. The driver load is open or short-circuited; 2. The pin or contactor coil of the connector is dirty; 3. Incorrect crimping or wiring of connectors; 4. Drive overcurrent, which exceeds the setting parameter value of Driver 7 Overcurrent; 5. Check Programmer / Controller Setup / Outputs / Driver 7 / Driver 7 Overcurrent.	Controller	
66	A-8	Driver Assignment. Fault type: 5. The serial number of the driver caused the fault.	Turn off the driver.	1. One driver is used for two or more functions. 2. Check Programmer / Controller Setup / IO Assignments / Coil Drivers: Main contactor driver; Electromagnetic brake drive; Pump contactor drive.	Controller	
67	A-9	Coil Supply Fault. Fault type: 1. Short circuit with B- or hardware failure; 2. A short circuit occurs inside the drive, resulting in the power supply of the coil being cut off; 3. The coil power supply startup detection fails; 4. The detection of coil power supply startup prohibition is invalid.	Turn off all outputs of the controller	1. Driver load is short-circuited. 2. Dirty connector pin or contactor coil. 3. Incorrect crimping or wiring of connector. 4. The controller is faulty.	Controller	
68	B-1	Analog input 1 out of range. Fault type: 1. Exceeding the upper limit; 2. Below the lower limit.	None, unless VCL adds a special handling program.	1. The input voltage of analog 1 is higher than the set value of Analog 1 High; 2. The input voltage of analog 1 is lower than the set value of Analog 1 Low; 3. Check Programmer / Controller Setup / Analog Inputs / Analog 1; 4. Check Programmer / Controller Setup / Analog Inputs / Configure / Analog 1 Low/Analog 1 High.	Controller	
69	B-2	Analog input 2 out of range. Fault type: 1 Exceeding the upper limit; 2. Below the lower limit.	None, unless VCL adds a special handling program.	1. The input voltage of analog 2 is higher than the set value of Analog 2 High; 2. The input voltage of analog 2 is lower than the set value of Analog 2 Low; 3. Check Programmer / Controller Setup / Analog Inputs / Analog 2; 4. Check Programmer / Controller Setup / Analog Inputs / Configure / Analog 2 Low/Analog 2 High.	Controller	

70	B-3	Analog input 3 out of range. Fault type: 1. Exceeding the upper limit; 2. Below the lower limit.	None, unless VCL adds a special handling program.	1. The input voltage of analog 3 is higher than the set value of Analog 3 High; 2. The input voltage of analog 3 is lower than the set value of Analog 3 Low; 3. Check Programmer / Controller Setup / Analog Inputs / Analog 3; 4. Check Programmer / Controller Setup / Analog Inputs / Configure / Analog 3 Low/Analog 3 High.	Controller	
71	B-4	Analog input 4 out of range. Fault type: 1. Exceeding the upper limit; 2. Below the lower limit.	None, unless VCL adds a special handling program.	1. The input voltage of analog 4 is higher than the set value of Analog 4 High; 2. The input voltage of analog 4 is lower than the set value of Analog 4 Low; 3. Check Programmer / Controller Setup / Analog Inputs / Analog 4; 4. Check Programmer / Controller Setup / Analog Inputs / Configure / Analog 4 Low/Analog 4 High.	Controller	
72	B-5	Analog input 5 out of range. Fault type: 1. Exceeding the upper limit; 2. Below the lower limit.	None, unless VCL adds a special handling program.	1. The input voltage of analog 5 is higher than the set value of Analog 5 High; 2. The input voltage of analog 5 is lower than the set value of Analog 5 Low; 3. Check Programmer / Controller Setup / Analog Inputs / Analog 5; 4. Check Programmer / Controller Setup / Analog Inputs / Configure / Analog 5 Low/Analog 5 High.	Controller	
73	B-6	Analog input 6 out of range. Fault type: 1. Exceeding the upper limit; 2. Below the lower limit.	None, unless VCL adds a special handling program.	1. The input voltage of analog 6 is higher than the set value of Analog 6 High; 2. The input voltage of analog 6 is lower than the set value of Analog 6 Low; 3. Check Programmer / Controller Setup / Analog Inputs / Analog 6; 4. Check Programmer / Controller Setup / Analog Inputs / Configure / Analog 6 Low/Analog 6 High.	Controller	

74	B-7	Analog input 7 out of range. Fault type: 1. Exceeding the upper limit; 2. Below the lower limit.	None, unless VCL adds a special handling program.	1. The input voltage of analog 1 is higher than the set value of Analog 7 High; 2. The input voltage of analog 7 is lower than the set value of Analog 7 Low; 3. Check Programmer / Controller Setup / Analog Inputs / Analog 7; 4. Check Programmer / Controller Setup / Analog Inputs / Configure / Analog 7 Low/Analog 7 High.	Controller	
75	B-8	Analog input 8 out of range. Fault type: 1. Exceeding the upper limit; 2. Below the lower limit.	None, unless VCL adds a special handling program.	1. The input voltage of analog 8 is higher than the set value of Analog 8 High; 2. The input voltage of analog 8 is lower than the set value of Analog 8 Low; 3. Check Programmer / Controller Setup / Analog Inputs / Analog 8; 4. Check Programmer / Controller Setup / Analog Inputs / Configure / Analog 8 Low/Analog 8 High.	Controller	
76	B-9	Analog input 9 out of range. Fault type: 1. Exceeding the upper limit; 2. Below the lower limit.	None, unless VCL adds a special handling program.	1. The input voltage of analog 9 is higher than the set value of Analog 9 High; 2. The input voltage of analog 9 is lower than the set value of Analog 9 Low; 3. Check Programmer / Controller Setup / Analog Inputs / Analog 9; 4. Check Programmer / Controller Setup / Analog Inputs / Configure / Analog 9 Low/Analog 9 High.	Controller	
77	B-B	Analog input 14 out of range. Fault type: 1. Exceeding the upper limit; 2. Below the lower limit.	None, unless VCL adds a special handling program.	1. The input voltage of analog 14 is higher than the set value of Analog 14 High; 2. The input voltage of analog 14 is lower than the set value of Analog 14 Low; 3. Check Programmer / Controller Setup / Analog Inputs / Analog 14; 4. Check Programmer / Controller Setup / Analog Inputs / Configure / Analog 14 Low/Analog 14 High.	Controller	
78	B-C	Analog Assignment Fault. Fault type: 9. The serial number of the analog caused the fault.	None, unless VCL adds a special handling program.	1. One analog quantity is used for two or more functions; 2. One analog input is out of range; 3. Check Programmer / Controller Setup / IO Assignments / Controls.	Controller	

79	B-D	Analog input 18 out of range. Fault type: 1. Exceeding the upper limit; 2. Below the lower limit.	None, unless VCL adds a special handling program.	1. The input voltage of analog 18 is higher than the set value of Analog 18 High; 2. The input voltage of analog 18 is lower than the set value of Analog 18 Low; 3. Check Programmer / Controller Setup / Analog Inputs / Analog 18; 4. Check Programmer / Controller Setup / Analog Inputs / Configure / Analog 18 Low/Analog 18 High.	Controller	
80	B-E	Analog input 19 out of range. Fault type: 1. Exceeding the upper limit; 2. Below the lower limit.	None, unless VCL adds a special handling program.	1. The input voltage of analog 19 is higher than the set value of Analog 19 High; 2. The input voltage of analog 19 is lower than the set value of Analog 19 Low; 3. Check Programmer / Controller Setup / Analog Inputs / Analog 19; 4. Check Programmer / Controller Setup / Analog Inputs / Configure / Analog 19 Low/Analog 19 High.	Controller	

F4A oil pump controller fault code table

Serial number	The instrument/controller displays fault codes.	Fault Name	Fault Description	Cause or Solution	Fault Source	Remarks
1	1-2	Controller Overcurrent Fault types: 1 = U-phase over current 2 = W-phase over current 3 = V-phase over current 4 = controller current > 135% current limit value.	Turn off the motor, main contactor, electromagnetic brake and throttle, and brake at full power.	1. The external connection of U, V and W phases of the motor is short-circuited; 2. The encoder signal of the motor is disturbed; 3. The motor parameters are misadjusted; 4. The controller is faulty.	Controller	
2	1-3	Current Sensor Fault type: 1	Turn off the motor, main contactor, electromagnetic brake and throttle, and brake at full power.	1. Leakage from U, V or W phase to vehicle body (short circuit in stator) 2. Controller failure 3. Replace controller.	Controller	

3	1-4	Precharge Failed Fault type: 1. Interrupt 2. Energy limit 3. Time limit	Turn off the motor, main contactor, electromagnetic brake and throttle, and brake at full power.	1. The load connected to the B+terminal of the controller suppresses the internal capacitor charging of the controller. 2. Check the voltage displayed on the Programmer \ System Monitor Menu \ Controller \ Capacitor Voltage. 3. Replace the controller.	Controller	
4	1-5	Controller Severe Undertemp	Turn off the motor, main contactor, electromagnetic brake and throttle, and brake at full power.	1. The controller operates in extreme environments. 2. Check the temperature displayed on the Programmer \ System Monitor Menu \ Controller \ Controller Temperature. If the temperature rises to -40℃ or above, restart the key switch or interlock switch. If it fails, replace the controller;	Controller	
5	1-6	Controller Severe Overtemp	Turn off the motor, main contactor, electromagnetic brake, throttle, and perform full power electric braking.	1. The controller works in extreme environment; 2. The load is too heavy; 3. The installation of the controller is unreasonable; 4. Check the temperature displayed by the programmer \ system monitor menu \ controller \ controller temperature. Reduce the temperature to below 95℃. Restart the key switch or interlock switch; if it fails, replace the controller;	Controller	

6	1-7	Severe B+ Undervoltage	No drive torque outputs	1. The battery is exhausted by the non-controller system; 2. The internal resistance of the battery is too high; 3. The battery is not connected when the motor is driven; 4. The fuse connected to B+ is blown or the main contactor is not attracted; 5. The battery parameters of the controller are set incorrectly; 6. Check the voltage displayed by the programmer \ system monitor menu \ controller \ capacitor voltage.	Controller	
7		Severe KSI Undervoltage	None, unless there are specific measures in VCL software.	1. The battery of the non-controller system is exhausted; 2. The resistance of the KSI input line is too high; 3. When the motor is driven, the KSI line is disconnected; 4. The fuse is blown; 5. Check the voltage displayed by the programmer \ system monitor menu \ controller \ key switch voltage.	Controller	
8	1-8	Severe B+ Overvoltage	Turn off the motor, main contactor, electromagnetic brake and throttle, and brake at full power.	1. The battery parameters of the controller are set incorrectly. 2. Regenerative braking. When the battery is recharged with current, the internal resistance of the battery is too high. 3. The battery is not connected during regenerative braking. 4. Check the voltage displayed by Programmer \ System Monitor Menu \ Controller \ Capacitor Voltage.	Controller	

9		Severe KSI Overvoltage	Turn off the motor, main contactor, electromagnetic brake and throttle, and brake at full power.	1. The battery voltage at KSI(pin1) terminal of the controller exceeds the set value of severe high voltage. 2. Check the voltage displayed by programmer \ system monitor menu \ controller \ key switch voltage.	Controller	
10	1-9	Speed Limit Supervision Fault	Turn off the interlock and electromagnetic brakes.	1. It is detected that the motor speed exceeds the Max Speed Supervision setting. 2. The Max Speed Supervision setting value is incorrect. 3. Check the values of Programmer\Application Setup\Max Speed Supervision settings	Controller	
11	1-A	Motor not stopped 1 = the motor moved more revolutions than the parameter, Motor_Not_Stopped_Position_Error setting. The motor turns more than the set parameter (Motor_Not_Stopped_Position_Error). 2 = the motor moved faster than the parameter Motor_Not_Stopped_Speed_Error (RPM) for 160ms. The motor rotates faster than the parameter Motor_Not_Stopped_Speed_Error (RPM) for 160ms. 3 = The three-phase drive has applied an electrical frequency greater than the Motor_Not_Stopped_Max_Frequency parameter, and applied an RMS current greater than the Motor_Not_Stopped_Max_Current parameter for 64ms. Three-phase drive applies a parameter that the electrical frequency is greater than the frequency parameter set in Motor_Not_Stopped_Max_Frequency and the effective current applied in 64ms is greater than the parameter set in Motor_Not_Stopped_Max_Current.	Turn off the motor, main contactor, electromagnetic brake, throttle, oil pump and brake at full power.	1. Motor Not Stopped. Maladjustment. 2. View: Programmer » Application Setup » Motor not stopped menu. 3. Failure or conflict of internal controller, which makes the motor rotate when it stops.	Controller	
12	1-B	Critical OS General (<100) Internal Fault. Contact Curtis support. (>100) An ill-formed or corrupted application package was loaded into controller.	Turn off the motor, main contactor, electromagnetic brake, throttle, interlock, drive 1, drive 2, drive 3, drive 4, drive 5, drive 6, drive 7, proportional drive, oil pump, coil power supply and brake at full power.	1. (<100) Internal failure. 2. (>100) CIT version is too old to fully support FOS version.	Controller	

13	1-C	OS General 2 (<100) Internal Fault. Contact Curtis support. (>100) An ill-formed or corrupted application package was loaded into controller.	The controller is inoperable.	1. (<100) Internal failure. 2. (>100) CIT version is too old to fully support FOS version.	Controller	
14	1-D	Reset Rejected	Turn off the interlock and throttle.	Restart key switch	Controller	
15	1-E	Motor short-circuiting	The controller is inoperable.	Reset controller	Controller	
16	2-2	Controller Overtemp Cutback	Reduce driving and braking torque.	1. The controller works in extreme environment; 2. The load is too heavy; 3. The installation of the controller is unreasonable; 4. The performance of the controller is limited at this temperature. 5. Check the temperature displayed by the programmer \ system monitor menu \ controller \ controller temperature. Reduce the temperature to below 85℃. Restart the key switch or interlock switch; if it fails, replace the controller;	Controller	

17	2-3	Undervoltage Cutback	Reduce driving torque	1. The battery needs to be charged, and the performance of the controller is limited at this voltage. 2. The parameters of the controller battery are set incorrectly. 3. The non-controller system runs out of batteries. 4. The internal resistance of the battery is too high. 5. The battery is not connected when driving the motor. 6. The fuse connecting B+ is blown or the main contactor is not attracted. 7. Check the programmer\system monitor menu\controller\currents\undervoltage cutback. 8. Check the voltage displayed by programmer\system monitor menu\controller\capacitor voltage.	Controller	
18	2-4	Overvoltage Cutback	Reduce the braking torque. Note: This fault can only be detected during regenerative braking.	1. During normal operation, the current generated by regenerative braking is recharged to the battery, and the battery voltage is too high, resulting in failure, and the performance of the controller is limited at this voltage. 2. The battery parameters of the controller are set incorrectly. 3. Regenerative braking. When the battery is recharged with current, the internal resistance of the battery is too high. 4. During regenerative braking, the battery is not connected. 5. Check Programmer\System Monitor Menu\Controller\Currents\Overvoltage Cutback. 6. Check the voltage displayed by programmer\system monitor menu\controller\capacitor voltage.	Controller	

19	2-5	Ext 5V Supply Failure. Failure type: 1. The output voltage of 5V is out of range. 2. The current of 5V voltage is out of range.	Turn off the 5V output	1. The external 5V load is too small (pin 16). 2. Check the voltage and current of 5V output displayed by programmer\system monitor menu\outputs.	Controller	
20	2-6	Ext 12V Supply Failure. Failure type: 1. The output voltage of 12V is out of range. 2. The current of 12V voltage is out of range.	Turn off the 12V output	1. The external 12V load is too small (pin 23). 2. Check the voltage and current of 12V output displayed by programmer\system monitor menu\outputs.	Controller	
21	2-8	Motor Temp Hot Cutback	1. Reduce the driving torque. 2. If MotorBrakingThermal CutBack_Enable = On, reduce the braking torque.	1. The motor temperature is greater than or equal to the set value of Temperature Hot, which causes the controller to output current limit. 2. The motor temperature and sensor parameters are set incorrectly. 3. Check programmer \ AC motor setup \ temperature sensor.	Controller	
22	2-9	Motor Temp Sensor	Enter the LOS mode, reduce the motor speed, and turn off the high position reduction function of the motor.	1. The temperature sensor of the motor is not connected properly; 2. The polarity of the sensor is not connected correctly (pin 9 and pin 12). 3. The temperature of the motor and the sensor parameters are set incorrectly. 4. Check the programmer\system monitor menu\AC motor\temperature.	Controller	
23	3-1	Main contactor drive fault (Main Driver). Fault Type: 1. Drive Short Circuit. 2. Drive Overcurrent. 3. Open/Short Circuit (High detected, should be Low). 4. Open/Short Circuit (Low detected, should be High). 5. Disconnect	Turn off the motor, main contactor, electromagnetic brake and throttle, and brake at full power.	1. Driver load is open or short-circuited. 2. Dirty connector pin or contactor coil. 3. Incorrect crimping or wiring of connector.	Controller	
24	3-2	EM Brake Driver Fault. Fault Type: 1. Drive Short Circuit. 2. Drive Overcurrent. 3. Open/Short Circuit (High detected, should be Low). 4. Open/Short Circuit (Low detected, should be High). 5. Disconnect	Turn off the electromagnetic brake, throttle, and brake at full power.	1. Driver load is open or short-circuited. 2. Dirty connector pin or contactor coil. 4. Incorrect crimping or wiring of connector.	Controller	
25	3-4	Load Hold Driver Fault	Close the currently assigned driver	Equivalent to Driver 1 Fault	Controller	

26	3-5	Lower Driver Fault	Close the currently assigned driver	Equivalent to Driver 1 Fault	Controller	
27	3-6	Encoder Fault. Fault type: 1. Verification loss. 2. Overcurrent leads to pulse loss. 3. Loss of speed pulse signal. 4. Motor matching. 5. The power supply part of the encoder is faulty.	Turn off the electromagnetic brake, throttle, and brake at full power.	1. Motor encoder fails. 2. Crimping or wiring error. 3. Check programmer\system monitor menu\AC motor\motor rpm. 4. Check Programmer\AC Motor Setup\Quadrature Encoder\Encoder Fault Setup. 5. Check programmer\system monitor menu\hardware inputs: Analog 3 and 4.	Controller	
28	3-7	Motor Open Circuit	Turn off the motor, main contactor, electromagnetic brake and throttle, and brake at full power.	1. Open circuit of motor phase. 2. Wrong crimping or wiring.	Controller	
29	3-8	Main Contactor Welded	Turn off the motor, main contactor, electromagnetic brake and throttle, and brake at full power.	1. The contact of the main contactor is always welded; 2. The V-phase or U-phase of the motor is open; 3. External voltage is directly connected to the B+ terminal of the controller.	Controller	
30	3-9	Main Contactor Did Not Close. Fault type: 1. After the control command is given, the main contactor does not close. 2. When working, the main contactor is disconnected.	Turn off the motor, main contactor, electromagnetic brake and throttle, and brake at full power.	Type 1: 1. The main contactor did not close. 2. The contact of the main contactor is defective. 3. The controller B+ terminal is externally connected with a heavy load, which leads to the inability to effectively charge the capacitor. 4. The large-current fuse is blown. 5. The main contactor parameter is set incorrectly. Type 2: 1. The main contactor is disconnected during operation 2. The contactor coil is disconnected. 3. The contactor is faulty.	Controller	

31	4-2	Throttle input fault. Fault type: 1. The external input is too low or too high.	Turn off the throttle.	1. The input voltage of the throttle exceeds the range set by Analog Low and Analog High, and the corresponding analog input is defined as the throttle input. 2. Check Programmer\Controller Setup\Analog Inputs\Analog 1 Type 3. Check Programmer\Controller Setup\Analog Inputs\Configure	Controller	
32	4-4	Brake Input Fault	Full power braking	The corresponding fault triggered by the brake input source (assigned analog input). Note: Input troubleshooting may also be an input voltage out of range.	Controller	
33	4-6	NV Memory Failure. Fault type: 1. Invalid check; 2. Error in writing data; 3. Data reading error; 4. Data writing was not completed due to power failure.	Turn off the motor, main contactor, electromagnetic brake, throttle, interlock, drive 1, drive 2, drive 3, drive 4, drive 5, proportional drive and brake at full power.	1. NV Memory Failure. 2. Internal failure of controller.	Controller	
34	4-7	HPD Sequencing Protection	Turn off the throttle.	1. The sequence of key switch, interlock, direction switch and throttle input operation is incorrect; 2. Incorrect wiring or crimping of key switch, interlock, direction switch and throttle input; 3. The key switch, interlock, direction switch and accelerator input are damp; 4. Check the programmer \ system monitor menu \ inputs \ switch status; 5. Check the programmer \ system monitor menu \ inputs \ throttle command.	Controller	
35		EMR Rev HPD	Turn off the throttle and use the electromagnetic brake.	The emergency reverse operation has ended, but the throttle input, direction switch, and interlock have not returned to their original positions.	Controller	

36		Pump HPD Protection. Fault type: 1. Only lifting; 2, Only lowering; 3. Lifting and lowering.	Turn off pump.	Incorrect input conditions for lifting/lowering throttle (>25%). Parameter setting error: 1. Hydraulic suppression type; 2. HPD/SRO determines hardware failure of the oil pump accelerator.	Controller	
37	4-9	Parameter Change Fault. Fault type: CAN ID of recording parameter.	Turn off the motor, main contactor, electromagnetic brake and throttle, and brake at full power.	After the interlock is closed, modify the safety-related parameters (the parameters marked with PCF).	Controller	
38	4-A	EMR Switch Redundancy Fault	Turn off the interlock and use the electromagnetic brake.	1. One or two of the emergency reverse switches do not work, resulting in an invalid state. 2. The switch is wet or dirty.	Controller	
39	5-1	Pump_SRO_Fault	Turn off the motor, main contactor, electromagnetic brake, throttle, and brake at full power, turn off the oil pump.	Operate in the correct order of operation	Controller	OEM Fault (Custom Fault)
40	5-2	Lift_Pot_Open_Fault	Turn off the motor, main contactor, electromagnetic brake, throttle, and brake at full power, turn off the oil pump.	Check lift sensor	Controller	OEM Fault (Custom Fault)
41	5-3	Arm PDO Fault	Turn off the motor, main contactor, electromagnetic brake, throttle, and brake at full power, turn off the oil pump.	Solve the communication problems with the controller (matching, protocol, line, etc.)	Controller	OEM Fault (Custom Fault)
42	5-5	PDO Fault 1353	Turn off the motor, main contactor, electromagnetic brake, throttle, and brake at full power, turn off the oil pump.	Check PDO 1353	Controller	OEM Fault (Custom Fault)

43	6-8	VCL Run Time Error	Turn off the motor, main contactor, electromagnetic brake, throttle, interlock, drive 1, drive 2, drive 3, drive 4, drive 5, proportional drive and brake at full power.	1. The runtime fault is defined by VCL. Please refer to the system information. 2. The drive command and model do not match when VCL is used for control.	Controller	
44	7-1	OS General	Turn off all	Reset controller	Controller	
45	7-2	PDO Timeout	Trigger: The time for two adjacent PDOs to receive information exceeds the set PDO timeout. Clear: received the CAN NMT information or reset the controller.	1. The time for two adjacent PDOs to receive information exceeds the set PDO timeout. 2. Adjust the PDO settings and view Programmer/Application Setup/CAN Interface/PDO Setups.	Controller	
46	7-3	Motor Stall Detected	Turn off the motor, electromagnetic brake and throttle, change the control mode to LOS, and the motor output is limited.	1. The motor is stalled; 2. The motor encoder is invalid; 3. Wrong crimping or wiring; 4. The power supply part of the motor encoder is abnormal; 5. Check the Programmer\System Monitor Menu\AC Motor\Motor RPM.	Controller	
47	7-7	Supervision Fault. Fault type: Curtis monitoring code	Turn off the motor, main contactor, electromagnetic brake, throttle, interlock, drive 1, drive 2, drive 3, drive 4, drive 5, proportional drive and brake at full power.	Controller Internal Fault	Controller	
48	7-9	Supervision Input Check Fault	Turn off the motor, main contactor, electromagnetic brake, throttle, interlock, drive 1, drive 2, drive 3, drive 4, drive 5, proportional drive and brake at full power.	Controller Internal Fault	Controller	

49	8-2	PDO Mapping Error	Turn off PDO	1. There are too many data bits in PDO mapping, or the target is incompatible; 2. Adjust PDO settings and check Programmer/Application Setup/CAN Interface/PDO Setups.	Controller	
50	8-3	Internal Hardware Fault. Fault type: Curtis hardware code.	Turn off the motor, main contactor, electromagnetic brake and throttle, and brake at full power.	Internal fault detected in the controller.	Controller	
51	8-4	Motor Braking Impaired	Turn off the motor, main contactor, electromagnetic brake and throttle, and brake at full power.	Battery overcharge, motor or controller overheating, or inappropriate parameters. Reset the interlock pedal	Controller	

52	8-7	Motor characterization error. Fault type: 71. Failure to write to memory RAM; 72. Temperature sensor malfunction; 73. Motor overheating; 74. Temperature reduction of the controller; 76. Low pressure reduction; 77. High pressure reduction; 78. No encoder signal; 79. The current verification is out of range; 80. The current verification is out of range; 81. Can detect encoder signals, but cannot automatically detect the number of pulses per revolution (encoder steps); 82. Automatic matching failed; 90/98, unable to detect feedback sine/cosine signals from permanent magnet synchronous motors; 91. Permanent magnet synchronous motor does not rotate; 92. Permanent magnet synchronous motors do not accelerate or experience low acceleration; 94-97. Delay compensation of permanent magnet synchronous motor exceeds the range; 99. The permanent magnet synchronous motor rotates at the beginning of matching; 102. Temperature sensor failure of permanent magnet synchronous motor; 103. High temperature reduction of permanent magnet synchronous motors; 104. Temperature reduction of permanent magnet synchronous motor controller; 106. Low voltage reduction of permanent magnet synchronous motor controller; 107. High voltage reduction of permanent magnet synchronous motor controller.	Turn off the motor, main contactor, electromagnetic brake and throttle, and brake at full power.	Motor matching failed during motor matching process.	Controller	
53	8-8	Encoder Pulse Error	Turn off the motor, main contactor, electromagnetic brake and throttle, and brake at full power.	1. The encoder step setting does not match the actual value; 2. Verify parameter settings and check the Programmer \ AC Motor Setup \ Quadrature Encoder \ Encoder Steps; 3. When the motor loses IFO control and there is no accelerator signal input, the motor accelerates and rotates.	Controller	

54	8-9	Parameter Out of Range. Fault type: Record the target CAN ID.	Turn off the motor, main contactor, electromagnetic brake and throttle, and brake at full power.	1. Parameter value out of range detected. 2. Use CIT tool to check and rewrite parameters	Controller	
55	9-1	Bad Firmware	The controller cannot be fully started.	The controller firmware is incorrect. 1. CRC or OS mismatch; 2. An incompatible OS was used.	Controller	
56	9-2	EM Brake Failed to Set	After activating the electromagnetic brake and throttle interlock, the slope parking function is triggered.	1. The vehicle operation is detected after setting the electromagnetic brake; 2. The electromagnetic brake fails to stop the motor from rotating after braking.	Controller	
57	9-3	Encoder LOS Mode	LOS Mode	1. Encoder failure of 3-6 or 7-3, entering LOS mode; 2. Motor encoder malfunction. 3. Crimping or wiring error. 4. Vehicle stalled.	Controller	
58	9-4	Emer Rev Timeout	Turn off the throttle and use the electromagnetic brake.	1. Emergency reverse trigger and termination, as the emergency reverse time period expires. 2. The emergency reverse input is stuck.	Controller	
59	9-6	Pump BDI Fault	Turn off pump.	1. The battery level is lower than the low battery lock parameter setting value. 2. BDI parameter setting error.	Controller	
60	9-9	Parameter Mismatch. Fault type: 1. Dual-drive function is turned on in torque mode; 2. The encoder is selected for SPMSM motor feedback; 3. Sine and cosine are selected for AC induction motor feedback.	Turn off the motor, main contactor, electromagnetic brake and throttle, and brake at full power.	1. Incorrect motor feedback selection for a different motor technology application; 2. The dual-drive function is turned on in torque mode; 3. The dual-drive function is turned on when the single controller is applied.	Controller	
61	9-A	Interlock Braking Supervision Fault. Fault types: 1. Motor speed exceeds interlock braking monitoring limit; 2. Interlock disconnected, electromagnetic brake not set within specified time for braking; 3. Interlock disconnected, electromagnetic brake not set, rotor position exceeds RPM limit.	Turn off the motor, electromagnetic brake and main contactor.	1. The motor speed exceeds the set parameter for Interlock Braking Supervision during interlocking braking; 2. Check Programmer/Application Setup/Interlock Braking/Supervision Enable. 3. Check Programmer/Application Setup/Interlock Braking/Interlock Braking Supervision.	Controller	

62	9-B	Emergency Reverse Fault (EMR Supervision) detected	Turn off the motor, electromagnetic brake and main contactor.	1. During the emergency reverse process, the motor speed exceeds the parameters set for Emergency Reverse Supervision; 2. Check Programmer/Application Setup/Emergency Reverse/Emergency Reverse Supervision.	Controller	
63	A-1	Drive 1 Fault. Fault Type: 1. Drive short circuit; 2. Drive overcurrent; 3. Open circuit/short circuit (detected as high, it should be low); 4. Open circuit/short circuit (detected as low, it should be high); 5. Disconnection; 6. The output is limited to no current. Fault types 3-5 require drive fault detection to be enabled.	Turn off the drive 1	1. The driver load is open or short-circuited; 2. The pin or contactor coil of the connector is dirty; 3. Incorrect crimping or wiring of connectors; 4. Drive overcurrent, which exceeds the setting parameter value of Driver 1 Overcurrent; 5. Check Programmer / Controller Setup / Outputs / Driver 1 / Driver 1 Overcurrent.	Controller	
64	A-2	Drive 2 Fault. Fault Type: 1. Drive short circuit; 2. Drive overcurrent; 3. Open circuit/short circuit (detected as high, it should be low); 4. Open circuit/short circuit (detected as low, it should be high); 5. Disconnection; 6. The output is limited to no current. Fault types 3-5 require drive fault detection to be enabled.	Turn off the drive 2	1. The driver load is open or short-circuited; 2. The pin or contactor coil of the connector is dirty; 3. Incorrect crimping or wiring of connectors; 4. Drive overcurrent, which exceeds the setting parameter value of Driver 2 Overcurrent; 5. Check Programmer / Controller Setup / Outputs / Driver 2 / Driver 2 Overcurrent.	Controller	
65	A-3	Drive 3 Fault. Fault Type: 1. Drive short circuit; 2. Drive overcurrent; 3. Open circuit/short circuit (detected as high, it should be low); 4. Open circuit/short circuit (detected as low, it should be high); 5. Disconnection; 6. The output is limited to no current. Fault types 3-5 require drive fault detection to be enabled.	Turn off the drive 3	1. The driver load is open or short-circuited; 2. The pin or contactor coil of the connector is dirty; 3. Incorrect crimping or wiring of connectors; 4. Drive overcurrent, which exceeds the setting parameter value of Driver 3 Overcurrent; 5. Check Programmer / Controller Setup / Outputs / Driver 3 / Driver 3 Overcurrent.	Controller	

66	A-4	Drive 4 Fault. Fault Type: 1. Drive short circuit; 2. Drive overcurrent; 3. Open circuit/short circuit (detected as high, it should be low); 4. Open circuit/short circuit (detected as low, it should be high); 5, Disconnection; 6. The output is limited to no current. Fault types 3-5 require drive fault detection to be enabled.	Turn off the drive 4	1. The driver load is open or short-circuited; 2. The pin or contactor coil of the connector is dirty; 3. Incorrect crimping or wiring of connectors; 4. Drive overcurrent, which exceeds the setting parameter value of Driver 4 Overcurrent; 5. Check Programmer / Controller Setup / Outputs / Driver 4 / Driver 4 Overcurrent.	Controller	
67	A-5	Drive 5 Fault. Fault Type: 1. Drive short circuit; 2. Drive overcurrent; 3. Open circuit/short circuit (detected as high, it should be low); 4. Open circuit/short circuit (detected as low, it should be high); 5. Disconnection; 6. The output is limited to no current. Fault types 3-5 require drive fault detection to be enabled.	Turn off the drive 5	1. The driver load is open or short-circuited; 2. The pin or contactor coil of the connector is dirty; 3. Incorrect crimping or wiring of connectors; 4. Drive overcurrent, which exceeds the setting parameter value of Driver 5 Overcurrent; 5. Check Programmer / Controller Setup / Outputs / Driver 5 / Driver 5 Overcurrent.	Controller	
68	A-6	Drive 6 Fault. Fault Type: 1. Drive short circuit; 2. Drive overcurrent; 3. Open circuit/short circuit (detected as high, it should be low); 4. Open circuit/short circuit (detected as low, it should be high); 5. Disconnection; 6. The output is limited to no current. Fault types 3-5 require drive fault detection to be enabled.	Turn off the drive 6	1. The driver load is open or short-circuited; 2. The pin or contactor coil of the connector is dirty; 3. Incorrect crimping or wiring of connectors; 4. Drive overcurrent, which exceeds the setting parameter value of Driver 6 Overcurrent; 5. Check Programmer / Controller Setup / Outputs / Driver 6 / Driver 6 Overcurrent.	Controller	
69	A-7	Drive 7 Fault. Fault Type: 1. Drive short circuit; 2. Drive overcurrent; 3. Open circuit/short circuit (detected as high, it should be low); 4. Open circuit/short circuit (detected as low, it should be high); 5. Disconnection; 6. The output is limited to no current. Fault types 3-5 require drive fault detection to be enabled.	Turn off the drive 7	1. The driver load is open or short-circuited; 2. The pin or contactor coil of the connector is dirty; 3. Incorrect crimping or wiring of connectors; 4. Drive overcurrent, which exceeds the setting parameter value of Driver 7 Overcurrent; 5. Check Programmer / Controller Setup / Outputs / Driver 7 / Driver 7 Overcurrent.	Controller	
70	A-8	Driver Assignment. Fault type: 5. The serial number of the driver caused the fault.	Turn off the driver.	1. One driver is used for two or more functions. 2. Check Programmer / Controller Setup / IO Assignments / Coil Drivers: Main contactor driver; Electromagnetic brake drive; Pump contactor drive.	Controller	

71	A-9	Coil Supply Fault. Fault type: 1. Short circuit with B- or hardware failure; 2. A short circuit occurs inside the drive, resulting in the power supply of the coil being cut off; 3. The coil power supply startup detection fails; 4. The detection of coil power supply startup prohibition is invalid.	Turn off all outputs of the controller	1. Driver load is short-circuited. 2. Dirty connector pin or contactor coil. 3. Incorrect crimping or wiring of connector. 4. The controller is faulty.	Controller	
72	B-1	Analog input 1 out of range. Fault type: 1. Exceeding the upper limit; 2. Below the lower limit.	None, unless VCL adds a special handling program.	1. The input voltage of analog 1 is higher than the set value of Analog 1 High; 2. The input voltage of analog 1 is lower than the set value of Analog 1 Low; 3. Check Programmer / Controller Setup / Analog Inputs / Analog 1; 4. Check Programmer / Controller Setup / Analog Inputs / Configure / Analog 1 Low/Analog 1 High.	Controller	
73	B-2	Analog input 2 out of range. Fault type: 1 Exceeding the upper limit; 2. Below the lower limit.	None, unless VCL adds a special handling program.	1. The input voltage of analog 2 is higher than the set value of Analog 2 High; 2. The input voltage of analog 2 is lower than the set value of Analog 2 Low; 3. Check Programmer / Controller Setup / Analog Inputs / Analog 2; 4. Check Programmer / Controller Setup / Analog Inputs / Configure / Analog 2 Low/Analog 2 High.	Controller	
74	B-3	Analog input 3 out of range. Fault type: 1. Exceeding the upper limit; 2. Below the lower limit.	None, unless VCL adds a special handling program.	1. The input voltage of analog 3 is higher than the set value of Analog 3 High; 2. The input voltage of analog 3 is lower than the set value of Analog 3 Low; 3. Check Programmer / Controller Setup / Analog Inputs / Analog 3; 4. Check Programmer / Controller Setup / Analog Inputs / Configure / Analog 3 Low/Analog 3 High.	Controller	

75	B-4	Analog input 4 out of range. Fault type: 1. Exceeding the upper limit; 2. Below the lower limit.	None, unless VCL adds a special handling program.	1. The input voltage of analog 4 is higher than the set value of Analog 4 High; 2. The input voltage of analog 4 is lower than the set value of Analog 4 Low; 3. Check Programmer / Controller Setup / Analog Inputs / Analog 4; 4. Check Programmer / Controller Setup / Analog Inputs / Configure / Analog 4 Low/Analog 4 High.	Controller	
76	B-5	Analog input 5 out of range. Fault type: 1. Exceeding the upper limit; 2. Below the lower limit.	None, unless VCL adds a special handling program.	1. The input voltage of analog 5 is higher than the set value of Analog 5 High; 2. The input voltage of analog 5 is lower than the set value of Analog 5 Low; 3. Check Programmer / Controller Setup / Analog Inputs / Analog 5; 4. Check Programmer / Controller Setup / Analog Inputs / Configure / Analog 5 Low/Analog 5 High.	Controller	
77	B-6	Analog input 6 out of range. Fault type: 1. Exceeding the upper limit; 2. Below the lower limit.	None, unless VCL adds a special handling program.	1. The input voltage of analog 6 is higher than the set value of Analog 6 High; 2. The input voltage of analog 6 is lower than the set value of Analog 6 Low; 3. Check Programmer / Controller Setup / Analog Inputs / Analog 6; 4. Check Programmer / Controller Setup / Analog Inputs / Configure / Analog 6 Low/Analog 6 High.	Controller	
78	B-7	Analog input 7 out of range. Fault type: 1. Exceeding the upper limit; 2. Below the lower limit.	None, unless VCL adds a special handling program.	1. The input voltage of analog 1 is higher than the set value of Analog 7 High; 2. The input voltage of analog 7 is lower than the set value of Analog 7 Low; 3. Check Programmer / Controller Setup / Analog Inputs / Analog 7; 4. Check Programmer / Controller Setup / Analog Inputs / Configure / Analog 7 Low/Analog 7 High.	Controller	

79	B-8	Analog input 8 out of range. Fault type: 1. Exceeding the upper limit; 2. Below the lower limit.	None, unless VCL adds a special handling program.	1. The input voltage of analog 8 is higher than the set value of Analog 8 High; 2. The input voltage of analog 8 is lower than the set value of Analog 8 Low; 3. Check Programmer / Controller Setup / Analog Inputs / Analog 8; 4. Check Programmer / Controller Setup / Analog Inputs / Configure / Analog 8 Low/Analog 8 High.	Controller	
80	B-9	Analog input 9 out of range. Fault type: 1. Exceeding the upper limit; 2. Below the lower limit.	None, unless VCL adds a special handling program.	1. The input voltage of analog 9 is higher than the set value of Analog 9 High; 2. The input voltage of analog 9 is lower than the set value of Analog 9 Low; 3. Check Programmer / Controller Setup / Analog Inputs / Analog 9; 4. Check Programmer / Controller Setup / Analog Inputs / Configure / Analog 9 Low/Analog 9 High.	Controller	
81	B-B	Analog input 14 out of range. Fault type: 1. Exceeding the upper limit; 2. Below the lower limit.	None, unless VCL adds a special handling program.	1. The input voltage of analog 14 is higher than the set value of Analog 14 High; 2. The input voltage of analog 14 is lower than the set value of Analog 14 Low; 3. Check Programmer / Controller Setup / Analog Inputs / Analog 14; 4. Check Programmer / Controller Setup / Analog Inputs / Configure / Analog 14 Low/Analog 14 High.	Controller	
82	B-C	Analog Assignment Fault. Fault type: 9. The serial number of the analog caused the fault.	None, unless VCL adds a special handling program.	1. One analog quantity is used for two or more functions; 2. One analog input is out of range; 3. Check Programmer / Controller Setup / IO Assignments / Controls.	Controller	

83	B-D	Analog input 18 out of range. Fault type: 1. Exceeding the upper limit; 2. Below the lower limit.	None, unless VCL adds a special handling program.	1. The input voltage of analog 18 is higher than the set value of Analog 18 High; 2. The input voltage of analog 18 is lower than the set value of Analog 18 Low; 3. Check Programmer / Controller Setup / Analog Inputs / Analog 18; 4. Check Programmer / Controller Setup / Analog Inputs / Configure / Analog 18 Low/Analog 18 High.	Controller	
84	B-E	Analog input 19 out of range. Fault type: 1. Exceeding the upper limit; 2. Below the lower limit.	None, unless VCL adds a special handling program.	1. The input voltage of analog 19 is higher than the set value of Analog 19 High; 2. The input voltage of analog 19 is lower than the set value of Analog 19 Low; 3. Check Programmer / Controller Setup / Analog Inputs / Analog 19; 4. Check Programmer / Controller Setup / Analog Inputs / Configure / Analog 19 Low/Analog 19 High.	Controller	
85	C-1	Branding Error	Turn off the motor, main contactor, electromagnetic brake and throttle, and brake at full power.	1. Software and hardware brands do not match; 2. Contact local Curtis technical support to resolve the issue.	Controller	
86	C-2	BMS Cutback. 1. The battery current decreases; 2. Insufficient voltage reduction in battery cells; 3. Excessive voltage reduction in battery cells.	None, unless VCL adds a special handling program.	Resolve battery issues.	Battery	
87	C-5	PWM Input 10 Out of Range	None, unless VCL adds a special handling program.	Reset the controller by restoring the voltage to the allowable range.	Controller	

88	C-7	Analog input 31 out of range. Fault type: 1. Exceeding the upper limit; 2. Below the lower limit.	None, unless VCL adds a special handling program.	1. The input voltage of analog 14 is higher than the set value of Analog 31 High; 2. The input voltage of analog 14 is lower than the set value of Analog 31 Low; 3. Check Programmer / Controller Setup / Analog Inputs / Analog 31; 4. Check Programmer / Controller Setup / Analog Inputs / Configure / Analog 31 Low/Analog 31 High.	Controller	
89	C-8	Invalid CAN Port	No action	1. Mistuned dual driver CAN parameters; 2. CAN node ID conflicts due to dual drive.	Controller	
90	C-9	VCL Watchdog	No action	Kick_Watchdog(). Start and reset the specified watchdog timer.	Controller	
91	C-B	PWM Input 28 Out of Range. 1. The input is disconnected; 2. The measured input frequency is lower than (PWM_Input_28_Low_Frequency)-(PWM_Frequency Input_28_Frequency_ Fault_Tolerance); 3. The measured input frequency is higher than (PWM_ Input_28_High_Frequency) +(PWM_Input_28_Frequency_Fault_Tolerance); 4. The measured duty cycle is lower than the set limit, (PWM_ Input_28_Low_Duty_Cycle) -(PWM_Input_28_Duty_Cycle_Fault_Tolerance); 5. The measured duty cycle is higher than the set limit, (PWM_ Input_28_High_Duty_Cycle) + (PWM_Input_28_Duty_Cycle_Fault_Tolerance).	None, unless VCL adds a special handling program.	1. The execution cycle for this fault diagnosis is every 4 milliseconds. If no PWM signal is generated within 16 milliseconds, or if the measured value is not updated every 16 milliseconds, the input is considered disconnected. 2. Parameter imbalance; 3. Wiring error	Controller	

92	C-C	PWM Input 29 Out of Range. 1. The input is disconnected; 2. The measured input frequency is lower than (PWM_Input_29_Low_Frequency)-(PWM_Frequency Input_29_Frequency_ Fault_Tolerance); 3. The measured input frequency is higher than (PWM_Input_29_High_Frequency) +(PWM_Input_29_Frequency_Fault_Tolerance); 4. The measured duty cycle is lower than the set limit, (PWM_ Input_29_Low_Duty_Cycle) -(PWM_Input_29_Duty_Cycle_Fault_Tolerance); 5. The measured duty cycle is higher than the set limit, (PWM_ Input_29_High_Duty_Cycle) + (PWM_Input_29_Duty_Cycle_Fault_Tolerance).	None, unless VCL adds a special handling program.	1. The execution cycle for this fault diagnosis is every 4 milliseconds. If no PWM signal is generated within 16 milliseconds, or if the measured value is not updated every 16 milliseconds, the input is considered disconnected. 2. Parameter imbalance; 3. Wiring error	Controller	
93	C-D	Primary State Error. These are internal problems that occur during startup, parameter initialization, secondary micro-update or other runtime problems. 1 = PRIMARY_DEVICE_STARTUP = 0, 2 = PRIMARY_WAIT_KSI_STABLE, 3 = PRIMARY_DEVICE_STARTUP_ VALID, 4 = PRIMARY_INITIALIZE_PARAMETERS, 5 = PRIMARY_WAIT_FOR_FIRST_ SIGNALS, 6 = PRIMARY_WAIT_FOR_SUPERVISOR, 7 = PRIMARY_RESTORE_PARAMETER_ FAIL, 8 = PRIMARY_SUPERVISOR_FIRST_ SIGNALS_ERROR, 9 = PRIMARY_SUPERVISOR_STARTUP_ ERROR, 10 = PRIMARY_STARTUP_TIMER_ FAILURE, 11 = PRIMARY_WAIT_CAN_ HANDSHAKING_DONE, 12 = PRIMARY_RUNNING	The controller is inoperable.	Internal error in controller, please reset the controller.	Controller	

94	D-1	Lift Input Fault	Turn off lift	The fault diagnosis associated with the lift input source will trigger the fault. For example, if the lift input source is an analog input, all faults related to that analog input will be collected into that fault and reported Cleared: any allocation conflicts will be resolved, or the input will exceed the range, and then the controller will be reset.	Controller	
95	D-2	Phase PWM Mismatch. 0 = U phase. 1 = V phase. 2 = W phase.	Turn off the motor, main contactor, electromagnetic brake, throttle, and brake at full power, turn off the oil pump.	The difference between the measured phase PWM duty cycle and the measured phase PWM duty cycle is greater than the allowable value. Clear: reset controller	Controller	
96	D-3	Hardware Compatibility Fault	Turn off the motor, main contactor, electromagnetic brake, throttle, and brake at full power, turn off the oil pump.	Incompatible OS and controller; The downloaded software and controller hardware are incompatible.	Controller	
97	D-4	Lower Input Fault	Turn off Lower	The fault diagnosis associated with the Lower input source will trigger the fault. For example, if the Lower input source is an analog input, all faults related to that analog input will be collected into that fault and reported cleared: any allocation Conflicts will be resolved, or the input will exceed the range, and then the controller will be reset.	Controller	

98	D-6	Hazardous Movement. 1=The motor speed is opposite to the required speed direction, and the motor cannot accelerate in the correct direction within the time set by the program. If the programming time for the motor to accelerate to zero speed is changed to neutral, this hazardous will be detected. 2=The direction of the difference between the acceleration and the operator's speed requirements and the motor speed will be opposite. A parameter in the program time (Hazardous_Throttle_Response_Time) where the speed in the instruction direction is greater than the instruction speed by more than one parameter (Hazard_Speed)	Turn off interlock.	When the motor is required to move, the fault detects hazardous movement. The first danger is that if the throttle drops to zero or the direction switch is not in the driving direction, the motor will not be able to slow down. The second danger is that the motor accelerates in the wrong direction or too fast. Note: This fault only occurs when the control mode is selected in Speed_Mode, Speed_Mode_Express or Servo_Mode. Clear: Resets the controller. Set Discoverous_Direction_Response_Time=0 will disable these checks.	Controller	
99	D-D	IMU Failure. 1=SPI communication failure; 2=Curtis factory self inspection failure; 3=runtime check fault, incorrect data received from IMU; 4=The calibration test of the gyroscope is out of range, with a maximum calibration deviation exceeding.	No action	Check whether the configuration is correct or whether the vehicle is moving during calibration. Restart the key switch.	Controller	