SPAREPARTS LIST

Semi-electric Stacker SPN10

Version 02/2018

From truck identification number:

30130700011

SPN10-BPT-003-EN

TABLE OF CONTENTS

Fig.1 Portable Double Mast 2

Fig.2 Stationary Double Mast 4

Fig.3 Portable Single Mast 6

Fig.4 Stationary Single Mast 8

Fig.5 Big Wheel Assembly 10

Fig.6 Front Wheel Assembly 11

Fig.7 Inner Mast 12

Fig.8 Steering Operating System 14

Fig.9 Stationary Pallet Frame 16

Fig.10 Portable Pallet Frame 17

Fig.11 Hydraulic System..... 18

Fig.12 Distribution Box Components..... 20

Fig.13 Pump Station Components……22

Fig.1 Portable Double Mast

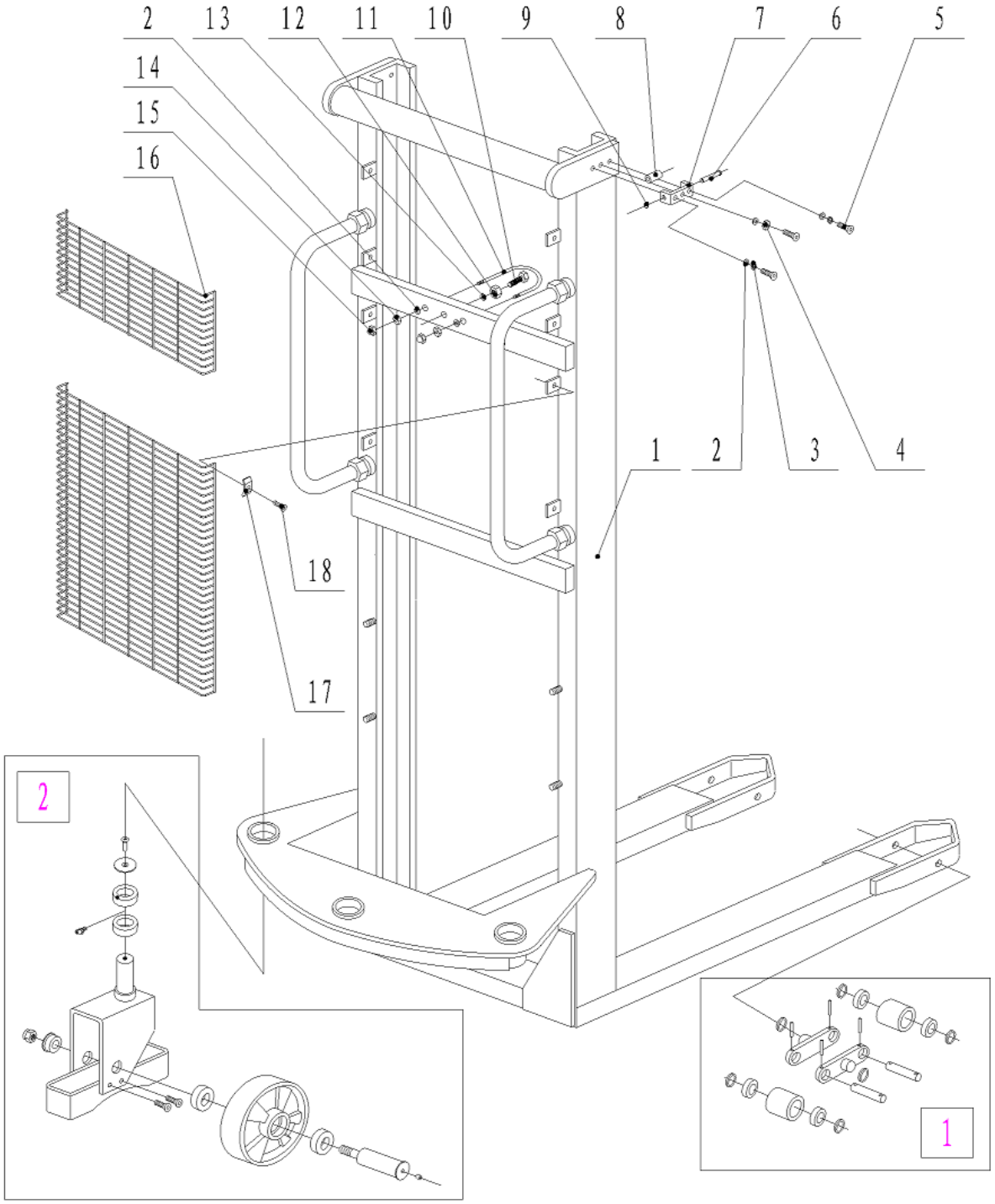

Fig.1 Portable Double Mast

No.	Code number	Item	Quantity	Remarks
1	2500501020	Mast	1	2500
	2500501005			3000
	2500501006			3300
2	0000025005	Flat washer 8	8	
3	0000025004	Spring washer 8	4	
4	0000024086	Hex nut M8	2	
5	0000023487	Screw M8x35	6	
6	2500507003	Hinge pin	1	
7	2500505003	Wheel seat	1	
8	2500511002	Guide wheel	1	
9	0000026034	Circlip for shaft 12	1	
10	0000023503	Bolt M10x35	1	
11	2500202001	Cylinder hoop	1	
12	0000024091	Hex nut M10	1	
13	0000025106	Flat washer 10	1	
14	0000024086	Hex nut M8	2	
15	0000024092	Cap nut M8	2	
16	2500537001	Protection plate	1	
17	2240637001	Pressure cushion	8	
18	0000023488	Screw M6X16	8	
19	1000525001	Spacer	Quantity,specification optional	
1	2500500009	Front wheel assembly	2	
2	2500500007	Big wheel assembly	1	

Fig.2 Stationary Double Mast

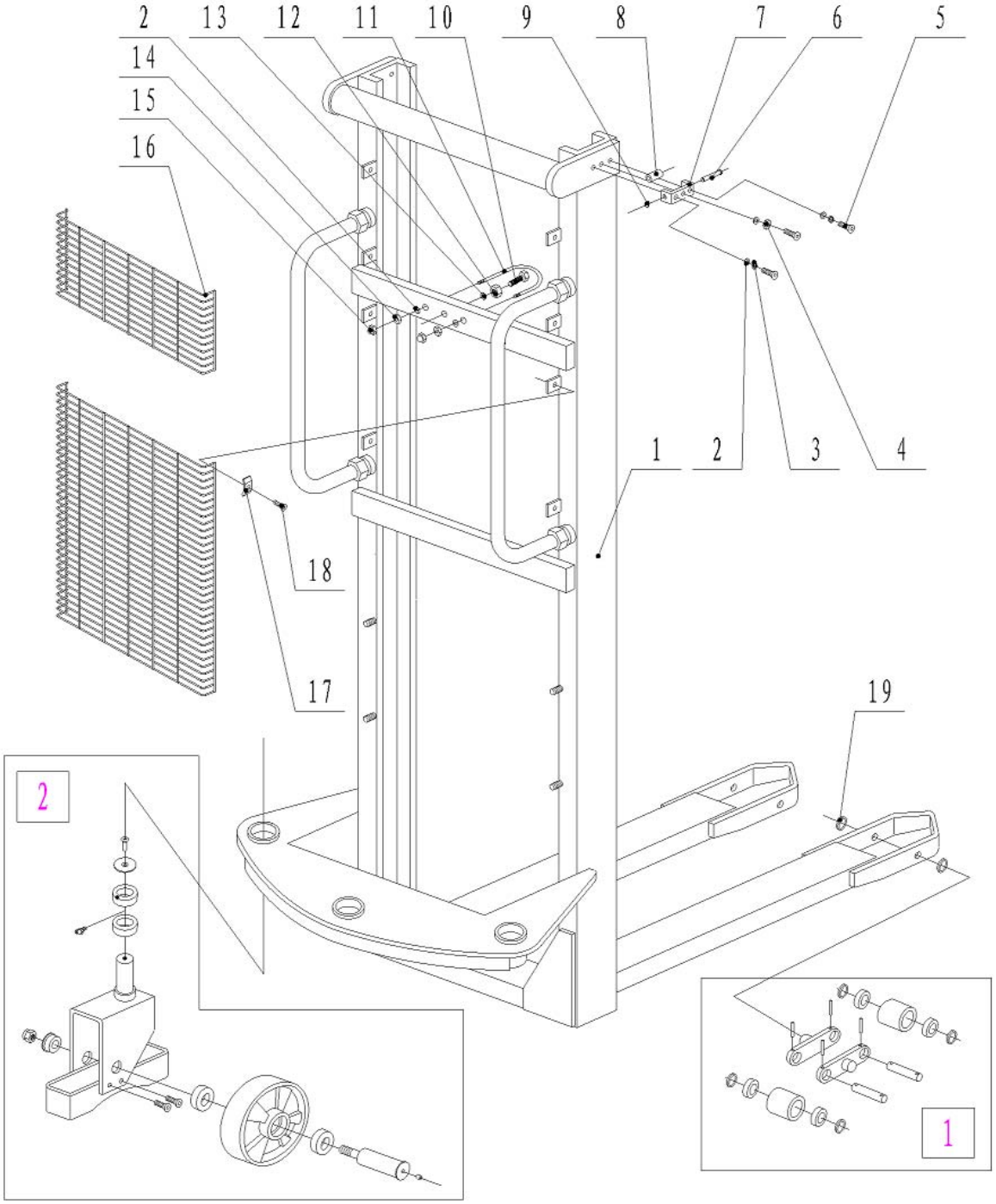

Fig.2 Stationary Double Mast

No.	Code number	Item	Quantity	Remarks
1	2500501015	Mast	1	2500
	2500501016			3000
	2500501017			3300
2	0000025005	Flat washer 8	8	
3	0000025004	Spring washer 8	4	
4	0000024086	Hex nut M8	2	
5	0000023487	Screw M8x35	6	
6	2500507003	Hinge pin	1	
7	2500505003	Wheel seat	1	
8	2500511002	Guide wheel	1	
9	0000026034	Circlip for shaft 12	1	
10	0000023503	Bolt M10x35	1	
11	2500202001	Cylinder hoop	1	
12	0000024091	Hex nut M10	1	
13	0000025106	Flat washer 10	1	
14	0000024086	Hex nut M8	2	
15	0000024092	Cap nut M8	2	
16	2500537001	Protection plate	1	
17	2240637001	Pressure cushion	8	
18	0000023488	Screw M6X16	8	
19	1000525001	Spacer	Quantity,specification optional	
1	2500500009	Front wheel assembly	2	
2	2500500007	Big wheel assembly	1	

Fig.3 Portable Single Mast

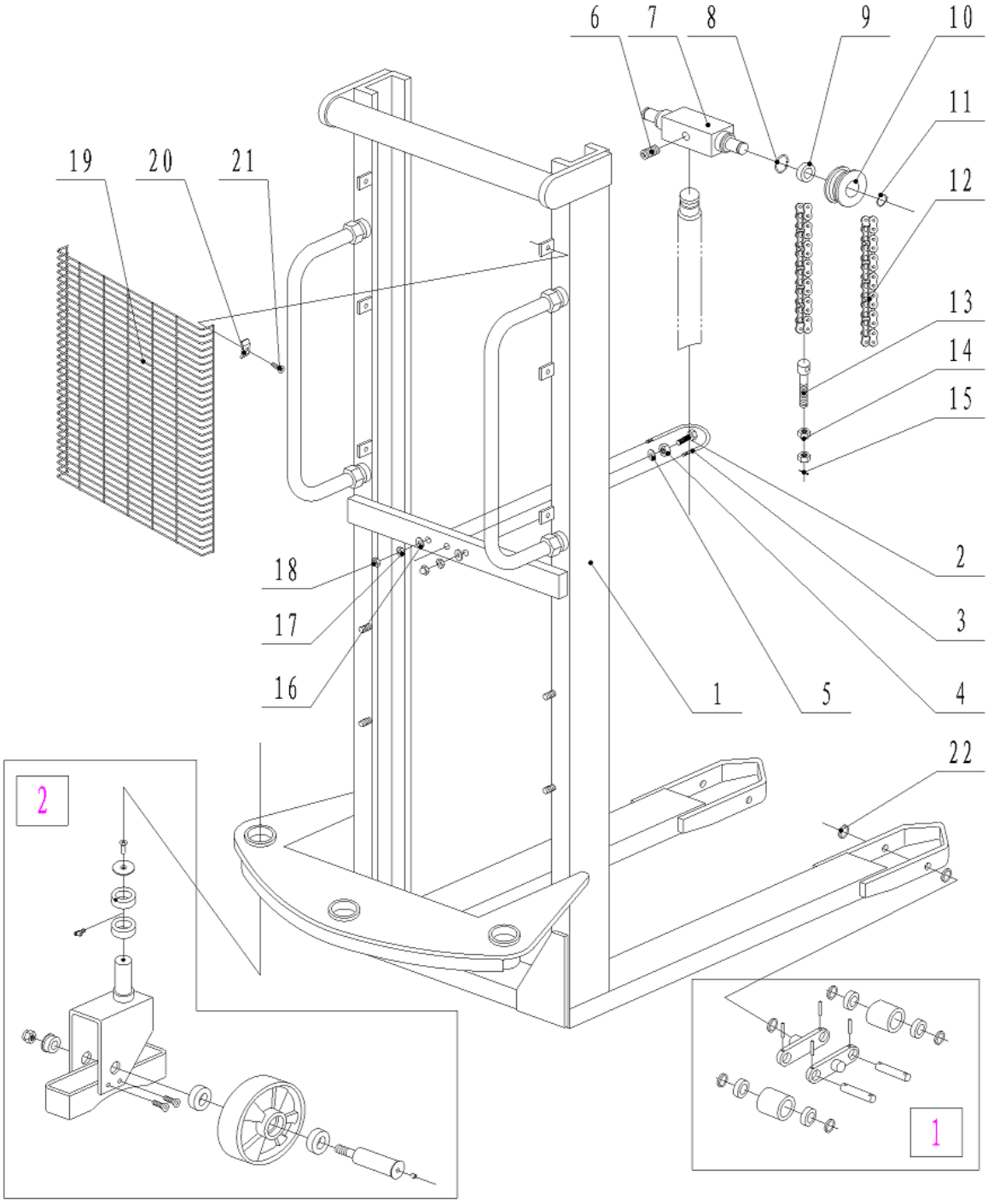

Fig.3 Portable Single Mast

No.	Code number	Item	Quantity	Remarks
1	2500501019	Single mast (1.6M)	1	
2	0000023503	Bolt M10x35	1	
3	2500202001	Cylinder hoop	1	
4	0000024091	Hex nut M10	1	
5	0000025106	Flat washer 10	1	
6	0000023013	Screw M8x16	1	
7	2500502005	Footstock	1	
8	0000026009	Circlip for hole 47	2	
9	0000027001	Bearing 6204	2	
10	2500502002	Chain wheel	2	
11	0000026003	Circlip for shaft 20	2	
12	0000029272	Chain	2	
13	2500502007	Chain rod	2	
14	0000024087	Hex nut M14	4	
15	0000028104	Cotter pin 2.5X25	2	
16	0000025005	Flat washer 8	2	
17	0000024086	Hex nut M8	2	
18	0000024092	Cap nut M8	2	
19	2500537002	Protection plate	1	
20	2240637001	Pressure cushion	6	
21	0000023488	Screw M6X16	6	
22	1000525001	Spacer	Quantity,specification optional	
1	2500500009	Front wheel assembly	2	
2	2500500007	Big wheel assembly	1	

Fig.4 Stationary Single Mast

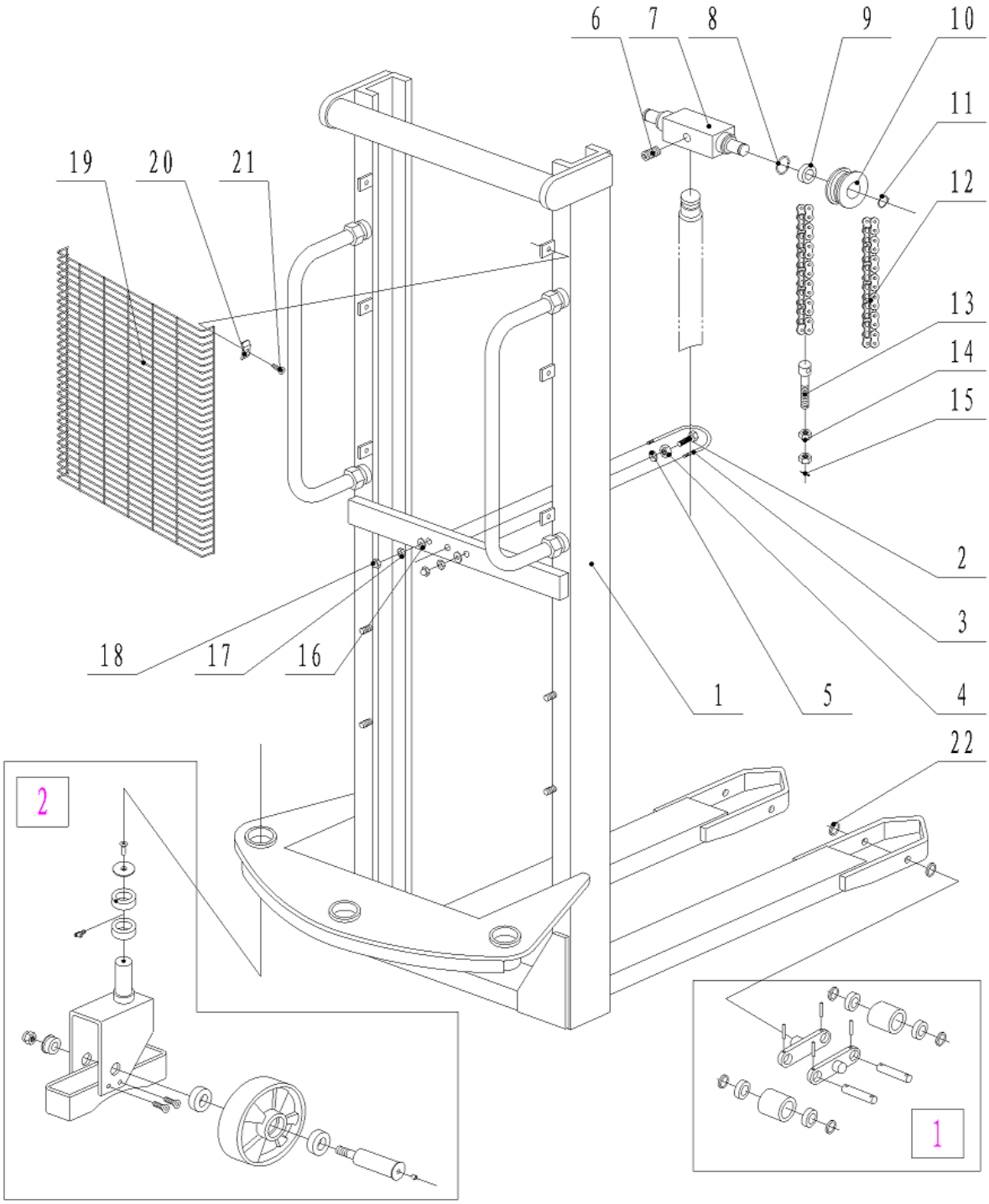

Fig.4 Stationary Single Mast

No.	Code number	Item	Quantity	Remarks
1	2500501018	Single mast (1.6M stationary)	1	
2	0000023503	Bolt M10x35	1	
3	2500202001	Cylinder hoop	1	
4	0000024091	Hex nut M10	1	
5	0000025106	Flat washer 10	1	
6	0000023013	Screw M8x16	1	
7	2500502005	Footstock	1	
8	0000026009	Circlip for hole 47	2	
9	0000027001	Bearing 6204	2	
10	2500502002	Chain wheel	2	
11	0000026003	Circlip for shaft 20	2	
12	0000029272	Chain	2	
13	2500502007	Chain rod	2	
14	0000024087	Hex nut M14	4	
15	0000028104	Cotter pin 2.5X25	2	
16	0000025005	Flat washer 8	2	
17	0000024086	Hex nut M8	2	
18	0000024092	Cap nut M8	2	
19	2500537002	Protection plate	1	
20	2240637001	Pressure cushion	8	
21	0000023488	Screw M6X16	8	
22	1000525001	Spacer	Quantity,specification optional	
1	2500500009	Front wheel assembly	2	
2	2500500007	Big wheel assembly	1	

Fig.5 Big Wheel Assembly

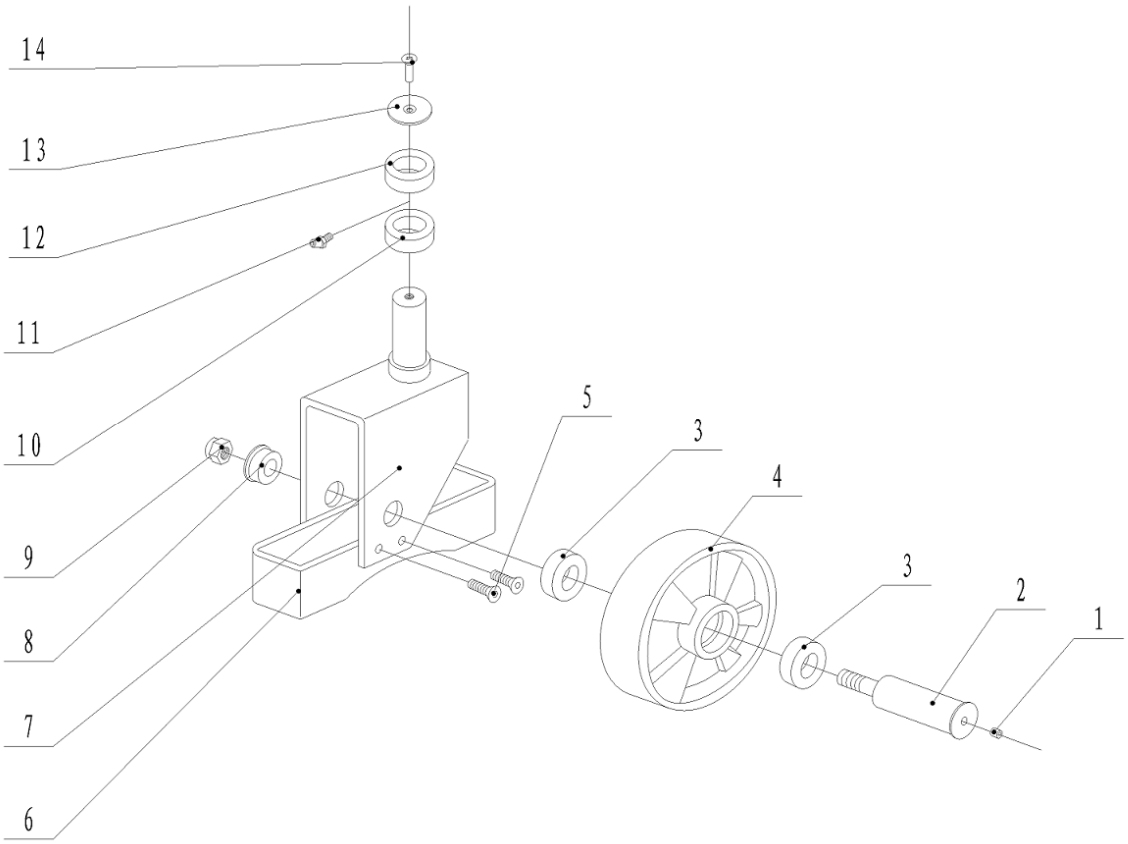

Fig.5 Big Wheel Assembly

No.	Code number	Item	Quantity	Remarks
1	0000030001	Greasing cup 6	1	
2	2500507001	Big wheel shaft	1	
3	0000027001	Bearing 6204	2	
4	2500516001	Big wheel Φ180x50	1	
5	0000023484	Sunk screw M6X10	4	
6	2500504002	Safety damper	1	
7	2500501012	Driven wheel frame	1	
8	2500525002	Washer	1	
9	0000024085	Lock nut M12	1	
10	0000027066	Roller bearing 30206	1	
11	0000030026	Greasing cup M8x1	1	
12	0000027012	Bearing 6206	1	
13	2500502006	Gland	1	
14	0000023485	Sunk screw M10x16	1	

Fig.6 Front Wheel Assembly

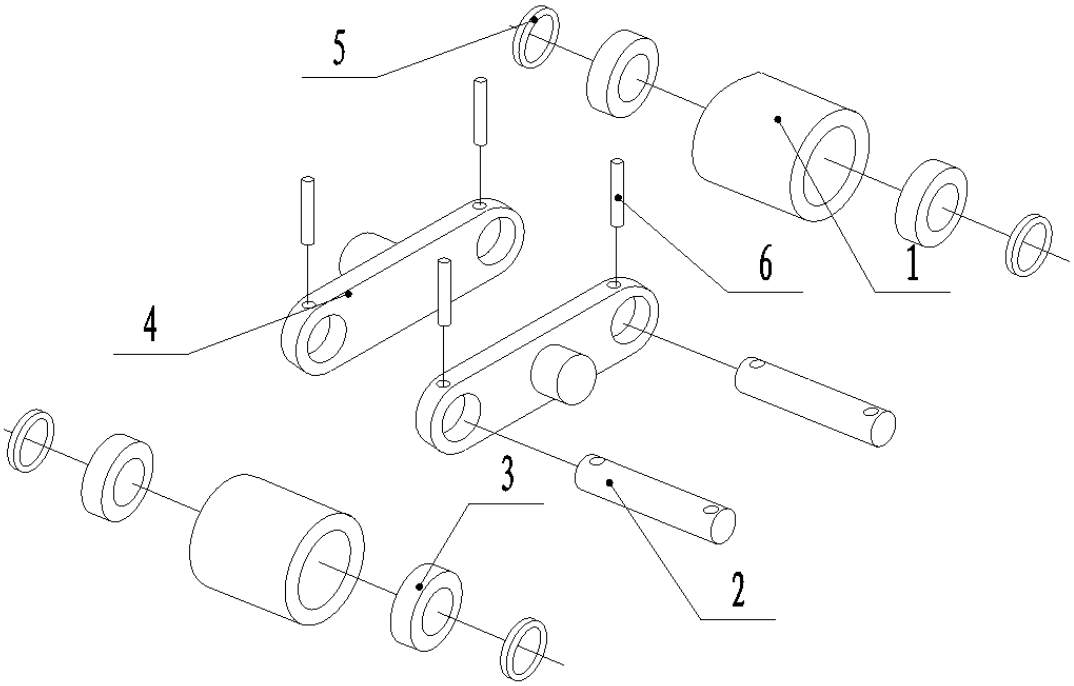

Fig.6 Front Wheel Assembly

No.	Code number	Item	Quantity	Remarks
1	2500516002	Pinion	2	ϕ74X70
2	2000407001	Pinion axle	2	
3	0000027001	Bearing 6204	4	
4	2000405002	Linking plate	2	
5	1000525001	Spacer	Quantity, specification optional	
6	0000028009	Elastic cylindrical pin 5x35	4	

Fig.7 Inner Mast

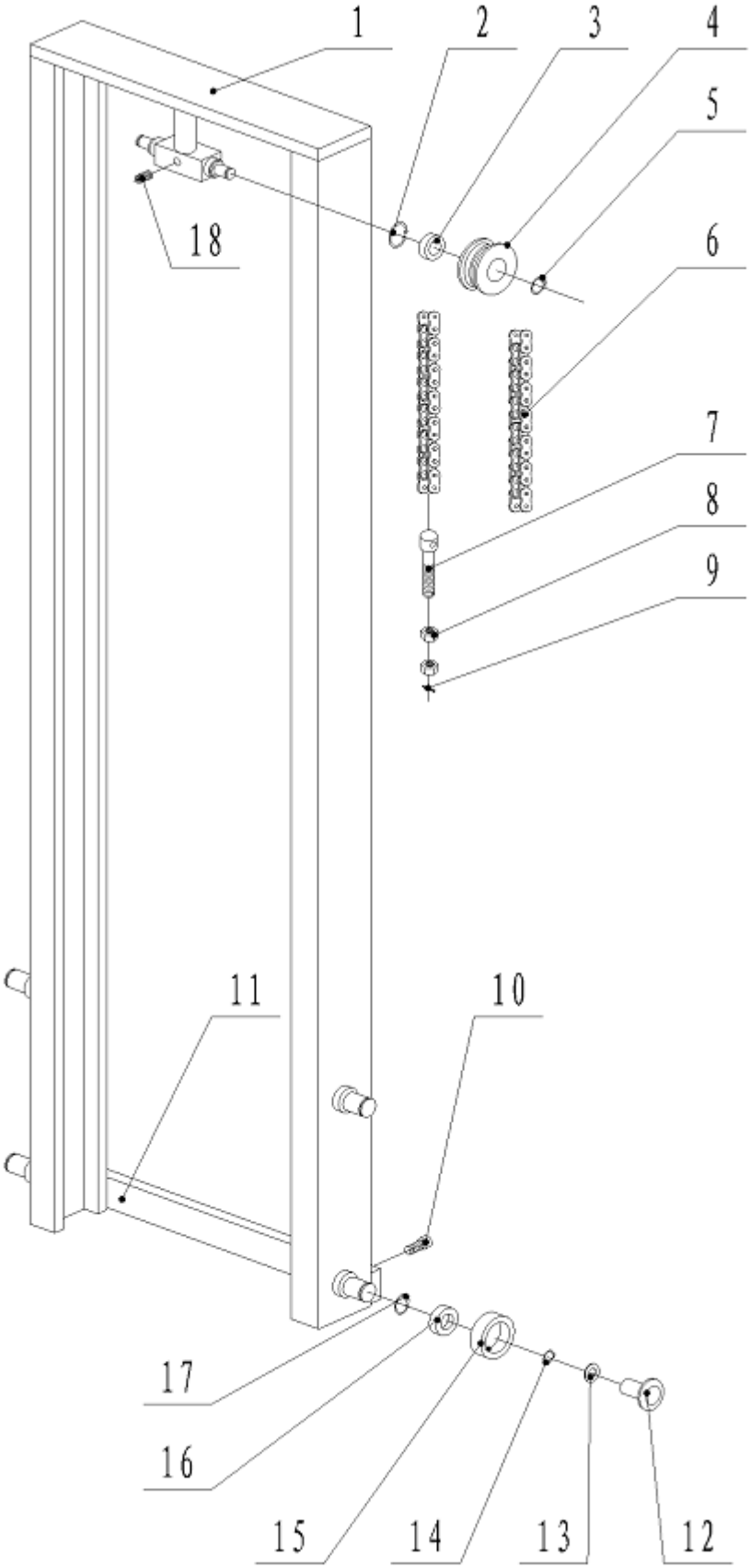

Fig.7 Inner Mast

No.	Code number	Item	Quantity	Remarks
1	2500501008	Inner mast	1	Double mast 2500
	2500501009			Double mast 3000
	2500501010			Double mast 3300
2	0000026009	Circlip for hole 47	2	
3	0000027001	Bearing 6204	2	
4	2500502002	Chain wheel	2	
5	0000026003	Circlip for shaft 20	2	
6	0000029268	Chain	2	Double mast 2500
	0000029269			Double mast 3000
	0000029180			Double mast 3300
7	2500502007	Chain rod	2	
8	0000024087	Hex nut M14	4	
9	0000028104	Cotter pin 2.5X25	2	
10	0000023483	Screw M10X20	2	
11	2500504001	Pull rod	1	
12	2500502003	Side cushion block	4	
13	2500525001	Helical washer	4	
14	0000026013	Circlip for shaft 25	4	
15	2500511001	Roller	4	
16	0000027011	Bearing 6205	4	
17	0000026002	Circlip for hole 52	4	
18	0000023013	Screw M8X16	1	

Fig.8 Steering Operating System

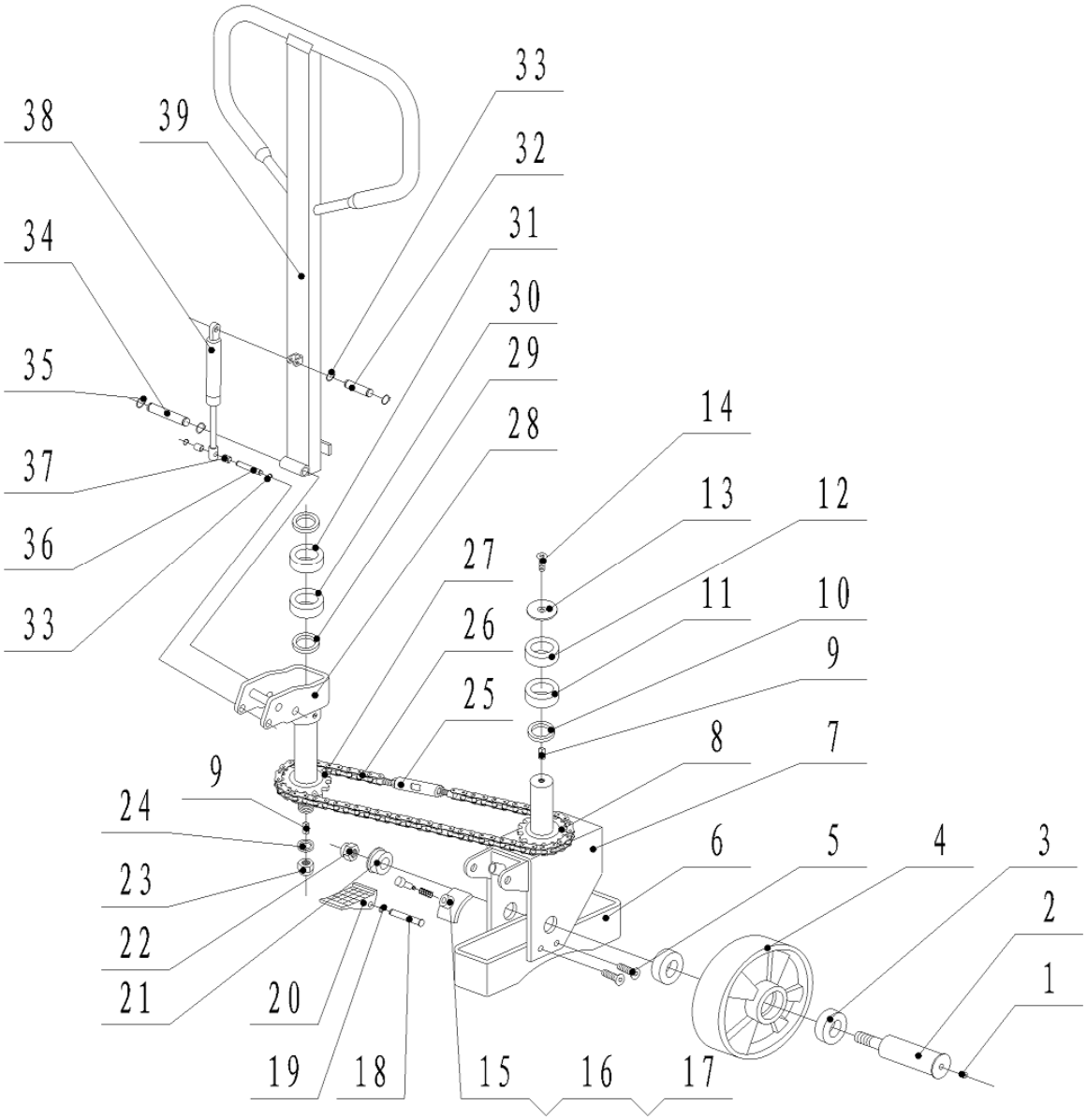

Fig.8 Steering Operating System

No.	Code number	Item	Quantity	Remarks
1	0000030001	Greasing cup 6	1	
2	2500507001	Big wheel shaft	1	
3	0000027001	Bearing 6204	2	
4	2500516001	Big wheel Φ180x50	1	
5	0000023484	Sunk screw M6x10	4	
6	2500504002	Safety damper	1	
7	2500501011	Braking wheel frame	1	
8	2500109002	Steering chain wheel	1	

9	0000036010	Flat pin C6X6	2	
10	2500125002	Washer	1	
11	0000027066	Roller bearing 30206	1	
12	0000027012	Bearing 6206	1	
13	2500502006	Gland	1	
14	0000023489	Sunk screw M10X16	1	
15	2500505001	Brake block	1	
16	2540231001	Spring	1	
17	2500523002	Push rod screw	1	
18	2500507002	Hinge pin	1	
19	0000026034	Circlip for shaft 12	1	
20	2500505002	Cam footpedal	1	
21	2500525002	Washer	1	
22	0000024085	Lock nut M12	1	
23	0000024041	Lock nut M18	1	
24	0000025104	Flat washer 18	1	
25	2500100003	Tension screw	2	
26	0000029274	Chain	1	
27	2500109001	Steering chain wheel	1	
28	2500101001	Handgrip rotating seat cover	1	
29	2500125001	Washer	1	
30	0000027069	Roller bearing 30205	1	
31	0000027011	Bearing 6205	1	
32	2500107001	Hinge pin	1	
33	0000026041	Circlip for shaft 10	4	
34	2500107002	Connecting shaft	1	
35	0000026034	Circlip for shaft 12	2	
36	2500107003	Air spring shaft	1	
37	2500113001	Spacer bush	2	
38	2500137001	Air spring	1	
39	2500100002	Steering tiller	1	

Fig.9 Stationary Pallet Frame

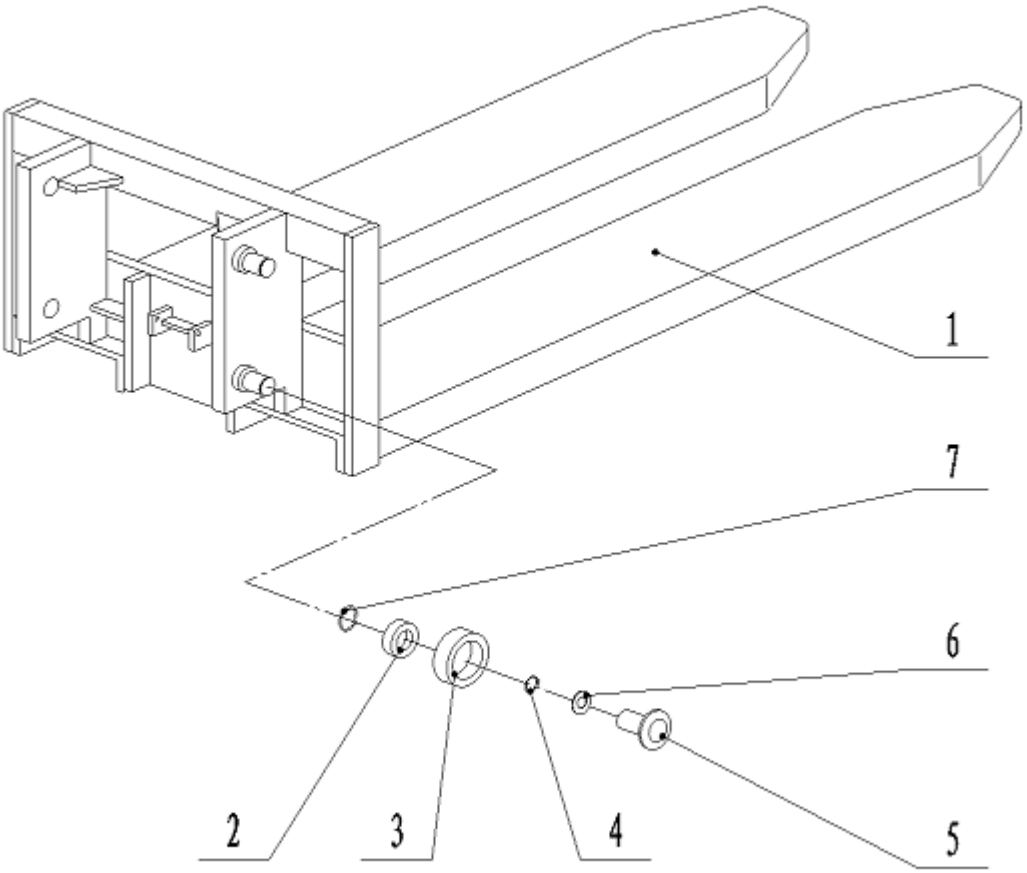

Fig.9 Stationary Pallet Frame

No.	Code number	Item	Quantity	Remarks
1	2510401002	Pallet frame welding	1	For double mast
	2510401003	Pallet frame welding		For single mast
2	0000027011	Bearing 6205	4	
3	2500411001	Roller	4	
4	0000026013	Circlip for shaft 25	4	
5	2500502003	Side cushion block	4	
6	2500525001	Helical washer	4	
7	0000026002	Circlip for hole 52	4	

Fig.10 Portable Pallet Frame

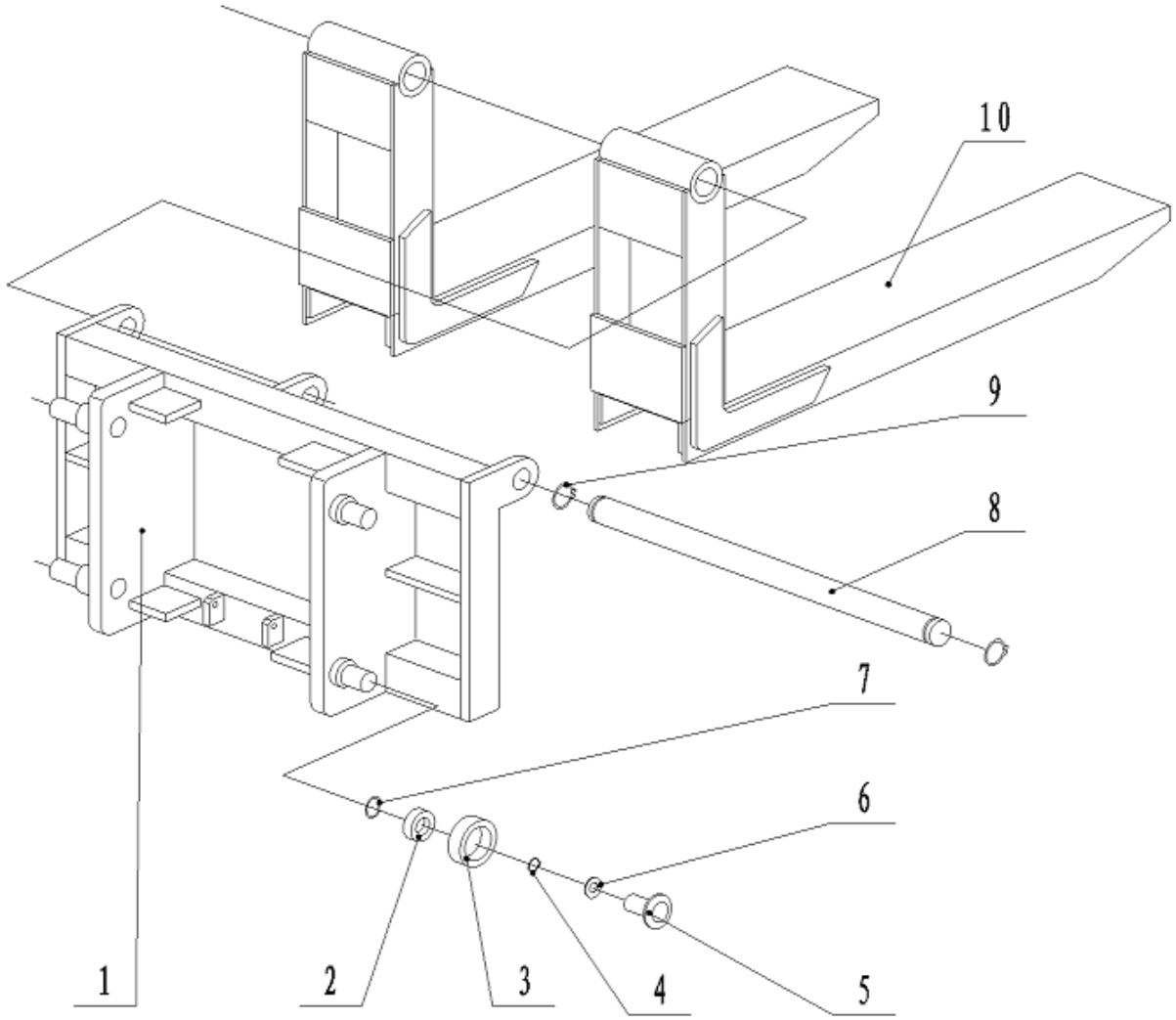

Fig.10 Portable Pallet Frame

No.	Code number	Item	Quantity	Remarks
1	2510401001	Pallet frame welding	1	For double mast
	2510401004	Pallet frame welding		For single mast
2	0000027011	Bearing 6205	4	
3	2500411001	Roller	4	
4	0000026013	Circlip for shaft 25	4	
5	2500502003	Side cushion block	4	
6	2500525001	Helical washer	4	
7	0000026002	Circlip for hole 52	4	
8	2500407001	Long shaft	1	
9	0000026042	Circlip for shaft 32	2	
10	2500401001	Fork	2	

Fig.11 Hydraulic System

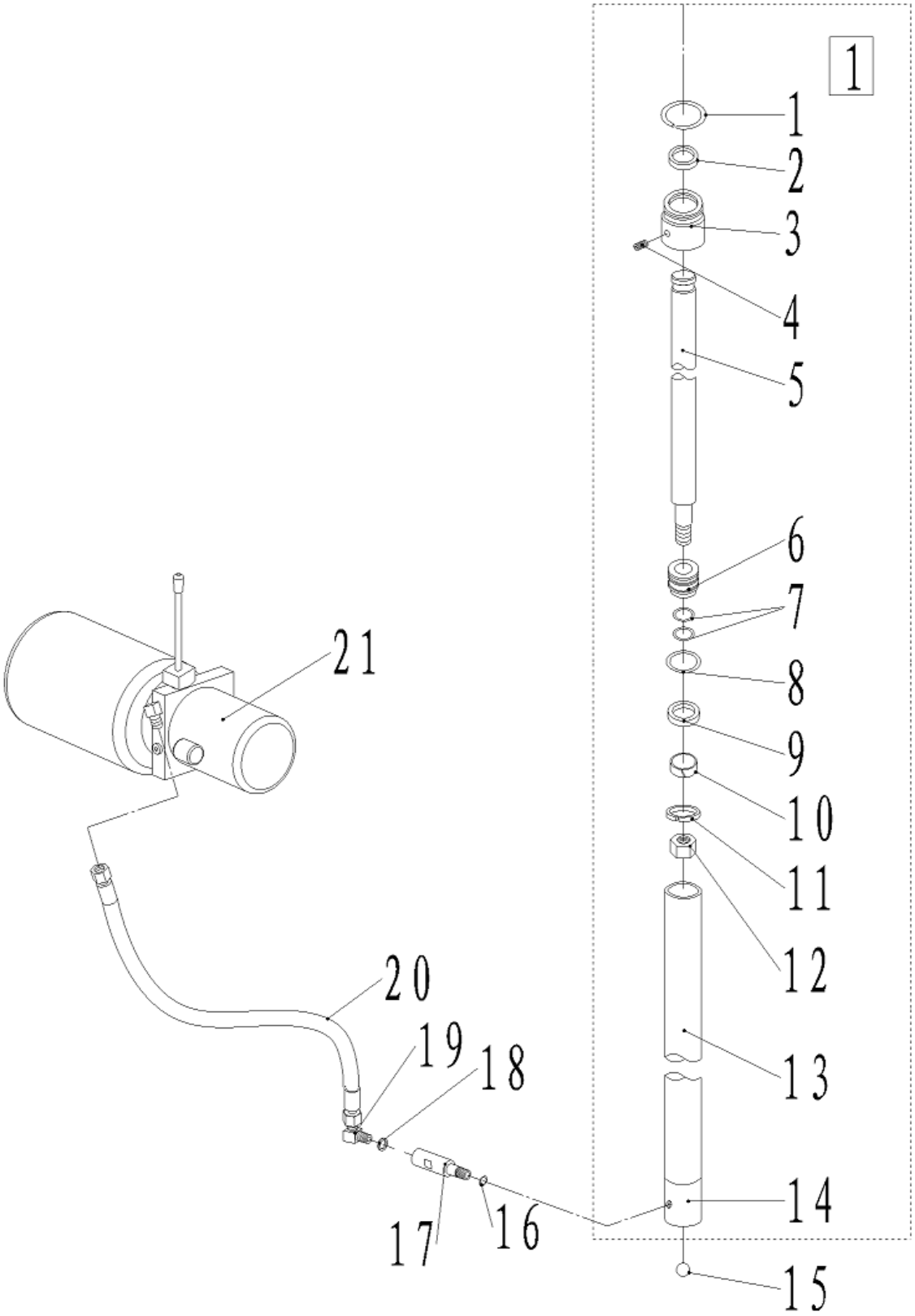

Fig.11 Hydraulic System

No.	Code number	Item	Quantity	Remarks
1	0000022125	Dust ring 40X48-5/6.5	1	
2	1050302003	Bushing	1	
3	2520202001	Shielding cover	1	
4	0000023502	Set screw M6X6	1	
5	2520207001	Piston rod	1	
6	2520202002	Piston Φ50	1	
7	0000022115	O-ring 32x2.4	2	
8	0000022029	O-ring 50x3.1	1	
9	2520202003	Support ring for hole 50X15X2.5	1	
10	0000025094	Spring washer 24	1	
11	0000022188	Sealing ring for piston rod 40X50X6	1	
12	0000024072	Hex nut M24X1.5	1	
13	2520208001	Cylinder	1	
14	2520202004	Plug	1	
15	0000005001	Steel ball 19.05	1	
16	0000022118	O-ring 18x2.4	1	
17	2520200004	Speed control valve	1	
18	0000022051	Washer assembly 16	1	
19	2520202007	Bend (1)	1	
20	2520200003	High pressure oil pipe L=850 M16x1.5	1	
21	2530200009	Pump station 12V-1.6kw	1	
①	2520200012	Cylinder assembly	1	2500
	2520200005			3000
	2520200006			1.6 type
	2520200007			3300

Fig.12 Distribution Box Components

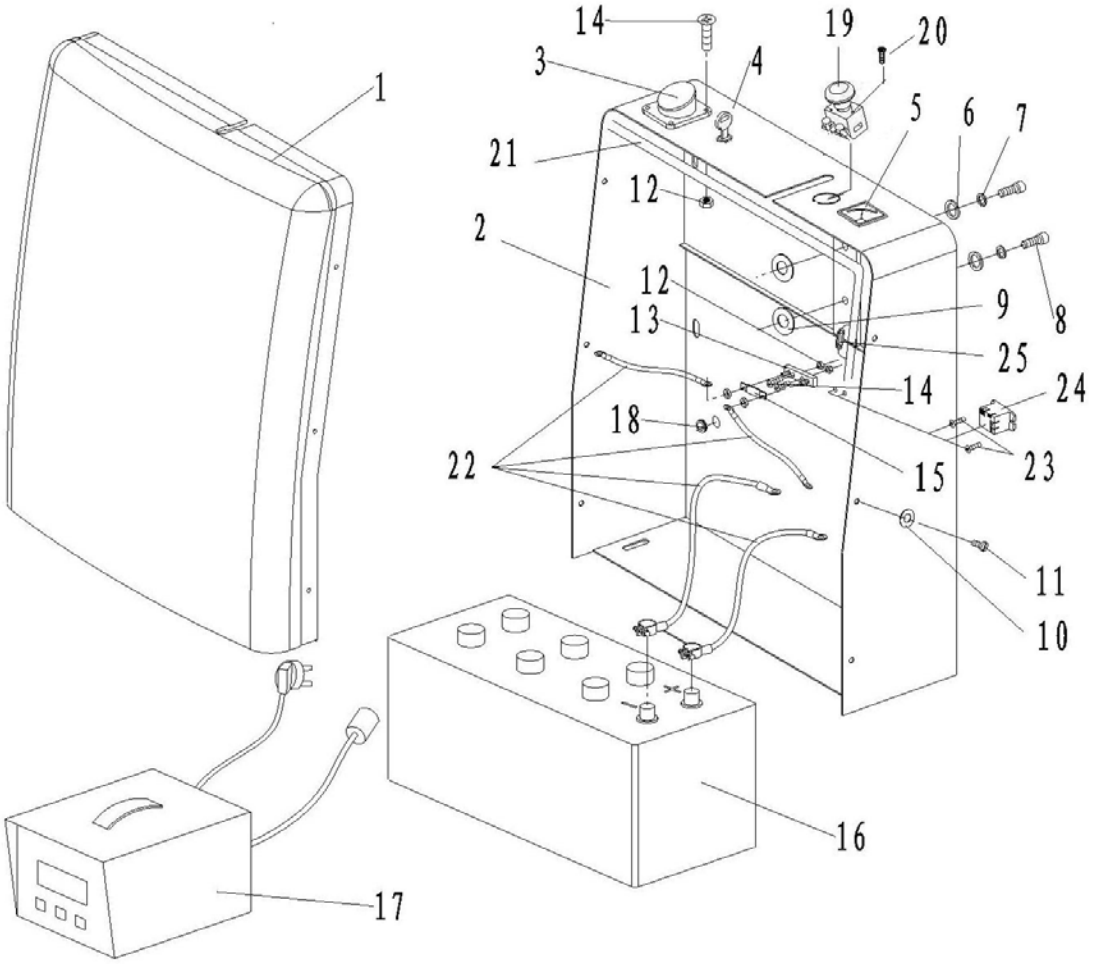

Fig.12 Distribution Box Components

No.	Code number	Item	Quantity	Remarks
1	2520303001	Electrical cover	1	
2	2520301001	Distribution box	1	
3	2520300003	NM-1463 socket	1	
4	2530334002	General key switch LKS-101A	1	
5	2520300002	Voltmeter CPC-48 DC20V	1	
6	0000025106	Flat washer 10	2	
7	0000025065	Spring washer 10	2	
8	0000023504	Screw M10X30	2	
9	0000025107	Big washer 10	2	
10	0000025108	Big washer 6	6	
11	0000023488	Screw M6X16	6	
12	0000024093	Hex nut M5	6	
13	1000434007	Fuse seat SYY	1	
14	0000023496	Screw M5X25	6	
15	1020434001	Bolted fuse 200A	1	
16	2520300001	Battery 12V/150Ah	1	Unified
17	2520334002	Charger12V/18A(Asian Chinese)	Choose 1	DF-AL18
	2520334003	Charger12V/18A(Asian English)		
	2520334004	Charger12V/18A(European)		
	2520334005	Charger12V/18A(American)		
	2520334006	Charger12V/18A(English)		
18	2210418003	Sheath	1	
19	2240434001	DC power switch ZDK31-250	1	
20	0000023126	Screw M5x12	2	
21	2500333003	Harness	1	
22	2500333004	Main wire	1	
23	0000023052	Screw M4X8	2	
24	2500334005	Relay AR92-1Z DC12V	1	AIKS
25	2500334006	Fuse tube 6X30 6A	1	

Fig.13 Pump Station Components

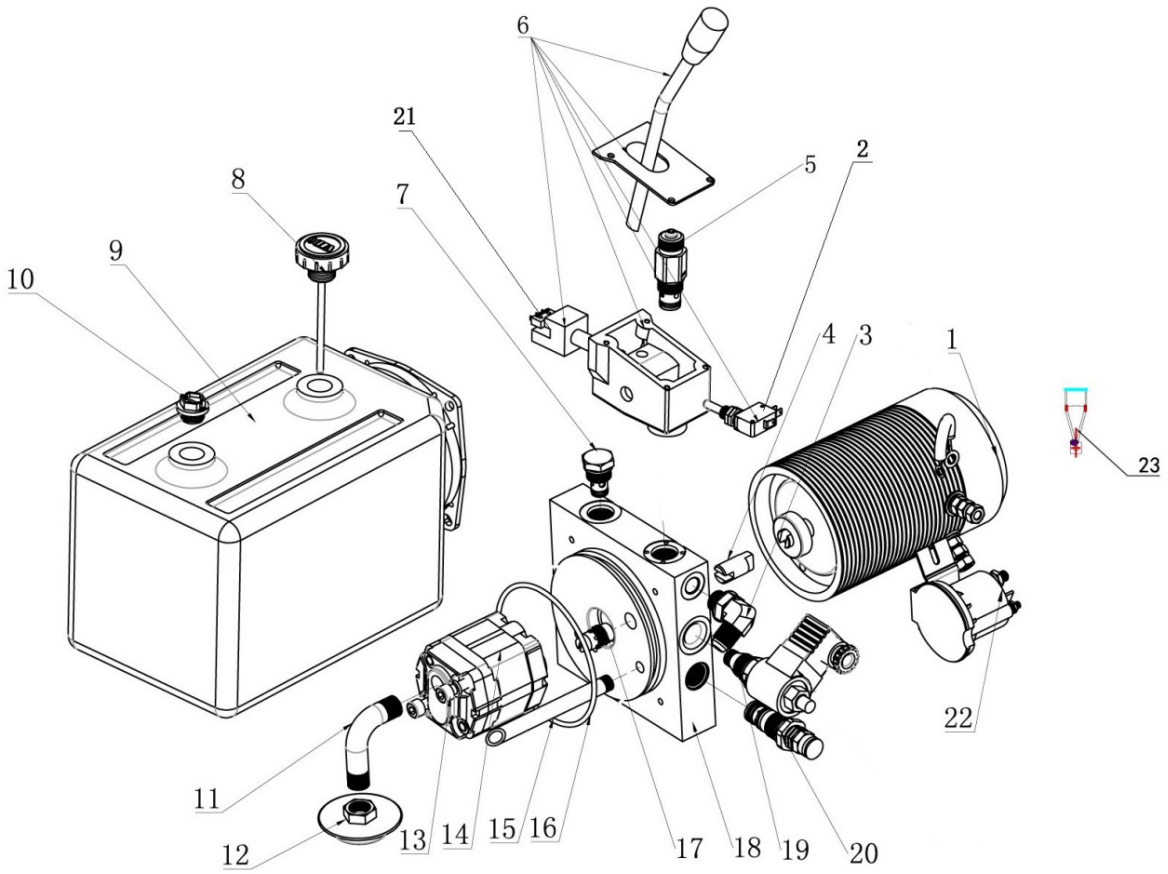

Fig.13 Pump Station Components

No.	Art No.		Description	Standard	Qty.
	twelve digits code	ten digits code			
1	402698520001	2500237004	Motor	MD12160	1
2	402698520003	2500214002	Micro switch		1
3	402698520017	2500237002	Joint	G3/8-M16*1.5-ZJ	1
4	402698520021		Coupler	DCP-035	1
5	402698520004		Valve core	MV-03-100	1
6	402698510000	2530337013	Hand valve	MV-03	1
7	402698520006	2500235003	Check valve	CV-01	1
8	402698520007	2500237005	Cylinder cover	FC-04	1
9	402698520008	9000012073	Cylinder	58133500207	1
10	402698520023		Plastic plug	PP-04	1
11	402698520009	2500217001	Oil suction pipe	FP-03H-4676	1
12	402698520010		Filter	FS-03B	1
13	402698520011		Bolt	M8x80-N	2
14	402698520012	2500237001	Gear pump	CBK-F120	1
15	402698520013		Oil return hose	RU12-150	1
16	402698520014	2500222001	O ring	112x3.55	1
17	402698520015	2500215001	Flow control	RPCV-02-08	1
18	402698520016	2530237011	Center valve	300.003.201.01	1
19	402698520019	2530337012	Electromagnetic	SCV(E)-Y012DC	1
20	402698520018	2500235002	Overflow valve	RV-03	1
21	402698520005	2500214001	Micro switch		1
22	402698520000	2500214003	Start button	DK0312A	1
23	402698520022	2530337014	Carbon brush	MD12.160-132	4