SPM10-BPT-002-1_EN

Parts & Components Manual

SPM10 **Semi-electric Stacker**

Date: 2012.08

TABLE OF CONTENTS

Fig.1 Portable Double Mast 2
Fig.2 Stationary Double Mast 4
Fig.3 Portable Single Mast 6
Fig.4 Stationary Single Mast 8
Fig.5 Big Wheel Assembly 10
Fig.6 Front Wheel Assembly 12
Fig.7 Inner Mast 13
Fig.8 Steering Operating System 15
Fig.9 Stationary Pallet Frame 18
Fig.10 Portable Pallet Frame 19
Fig.11 Hydraulic System 20
Fig.12 Distribution Box Components 22
Fig.13 Pump Station Components 24

Fig.1 Portable Double Mast

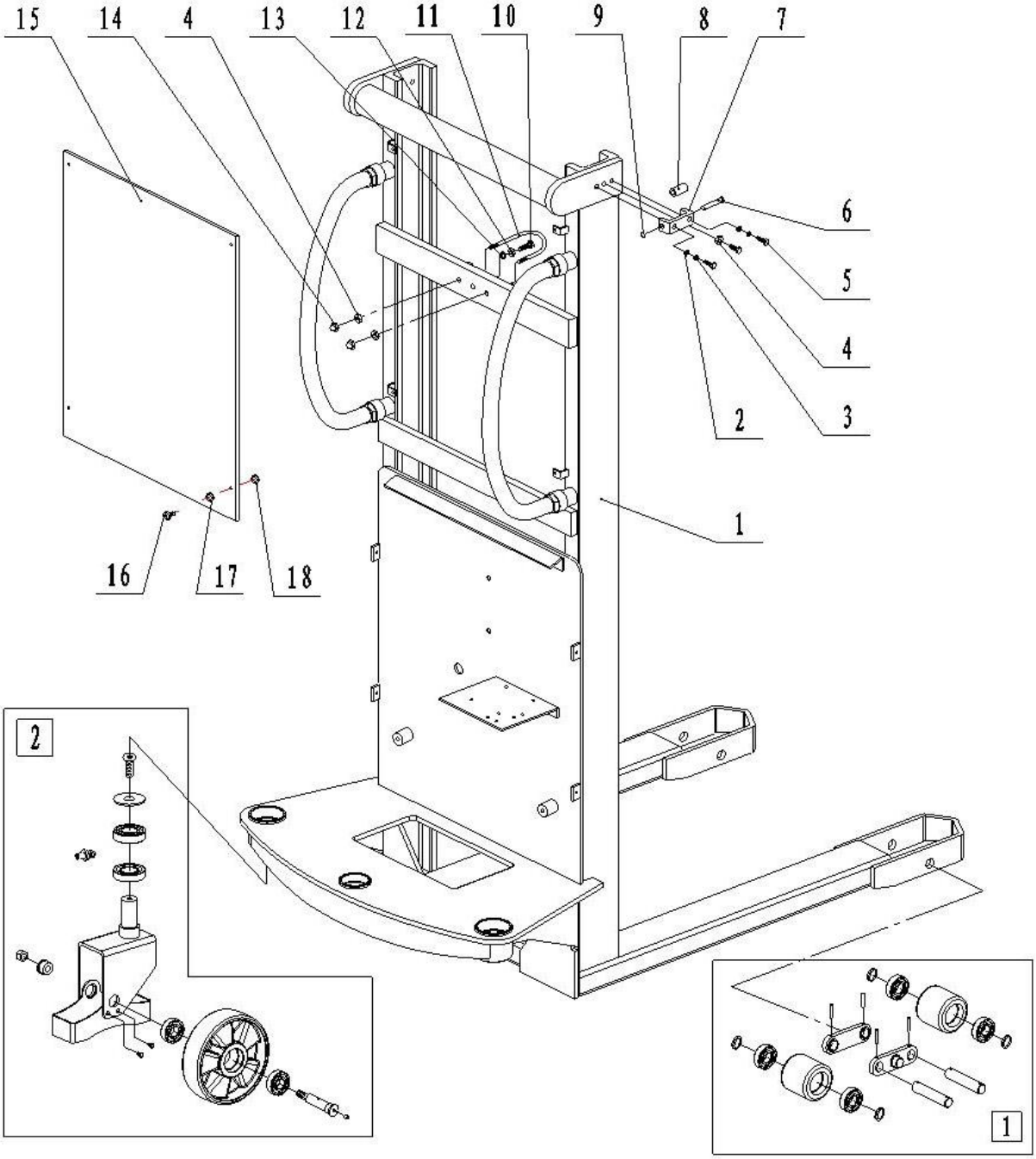

Fig.1 Parts List of Portable Double Mast

No.	Code number	Item	Quantity	Remarks
1	2530501005	Mast	1	2500
	2530501015			3000
	2530501016			3350
2	0000025005	Flat washer 8	4	
3	0000025004	Spring washer 8	4	
4	0000024086	Hex nut M8	4	
5	0000023487	Screw M8x35	6	
6	2500507003	Hinge pin	2	
7	2530504007	Wheel seat	2	
8	2500511002	Guide wheel	2	
9	0000026034	Circlip for shaft 12	2	
10	0000023495	Bolt M10x40	1	
11	2530202001	Cylinder hoop	1	
12	0000024091	Hex nut M10	1	
13	0000025065	Spring washer10	1	
14	0000024092	Cap nut M8	2	
15	2530503006	Protection plate	1	2500
	2530503007			3000
	2530503008			3350
16	0000023488	Screw M6x16	4	
17	0000025007	Flat washer 6	4	
18	2210618001	Rubber cushion	4	
□,1	2500500009	Front wheel assembly	2	
□,2	2500500007	Big wheel assembly	1	

Fig.2 Stationary Double Mast

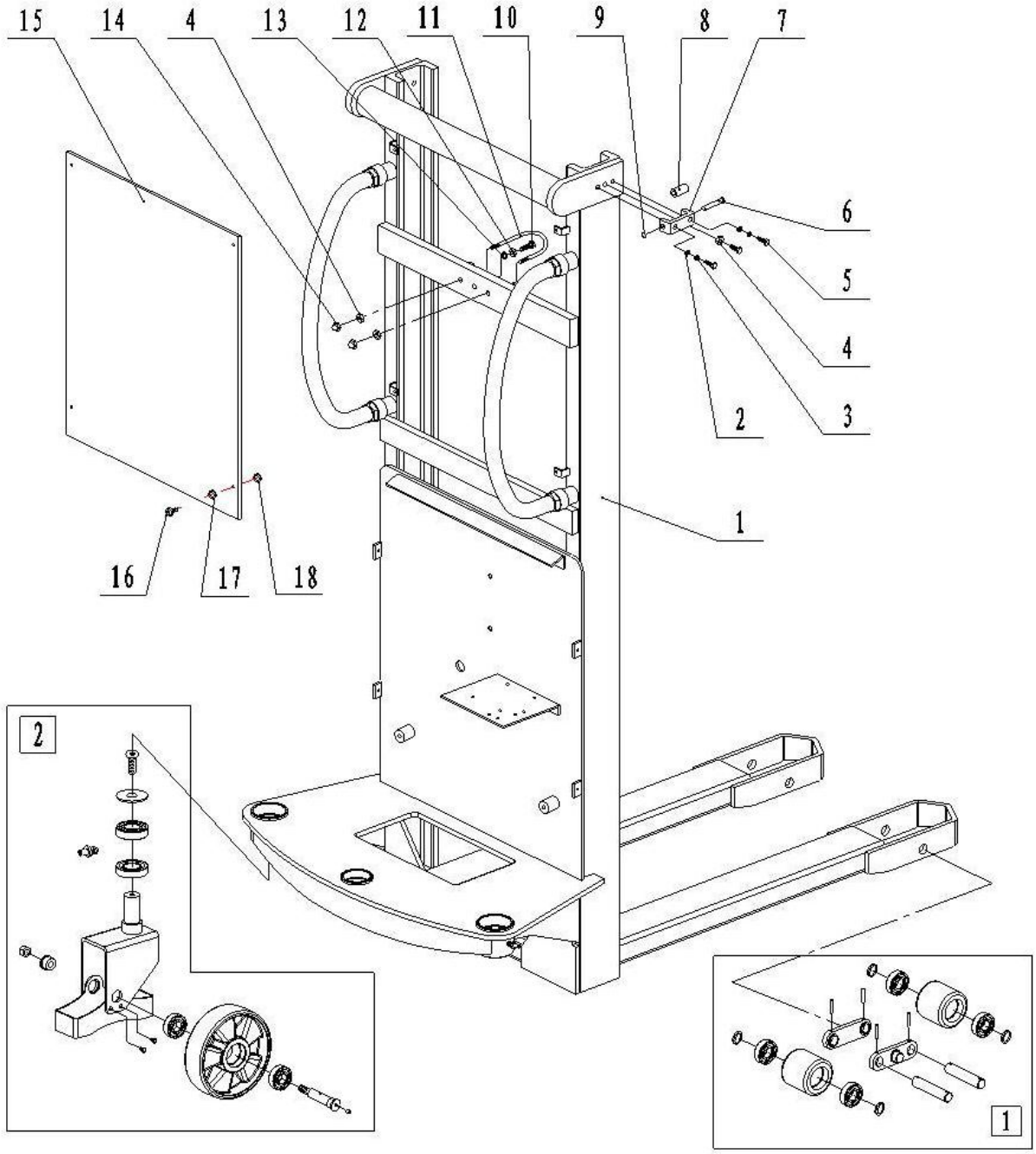

Fig.2 Parts List of Stationary Double Mast

No.	Code number	Item	Quantity	Remarks
1	2530501003	Mast	1	2500
	2530501009			3000
	2530501010			3350
2	0000025005	Flat washer 8	4	
3	0000025004	Spring washer 8	4	
4	0000024086	Hex nut M8	4	
5	0000023487	Screw M8x35	6	
6	2500507003	Hinge pin	2	
7	2530504007	Wheel seat	2	
8	2500511002	Guide wheel	2	
9	0000026034	Circlip for shaft 12	2	
10	0000023495	Bolt M10x40	1	
11	2530202001	Cylinder hoop	1	
12	0000024091	Hex nut M10	1	
13	0000025065	Spring washer 10	1	
14	0000024092	Cap nut M8	2	
15	2530503003	Protection plate	1	2500
	2530503004			3000
	2530503005			3350
16	0000023488	Screw M6x16	4	
17	0000025007	Flat washer 6	4	
18	2210618001	Rubber cushion	4	
□,1	2500500009	Front wheel assembly	2	
□,2	2500500007	Big wheel assembly	1	

Fig.3 Portable Single Mast

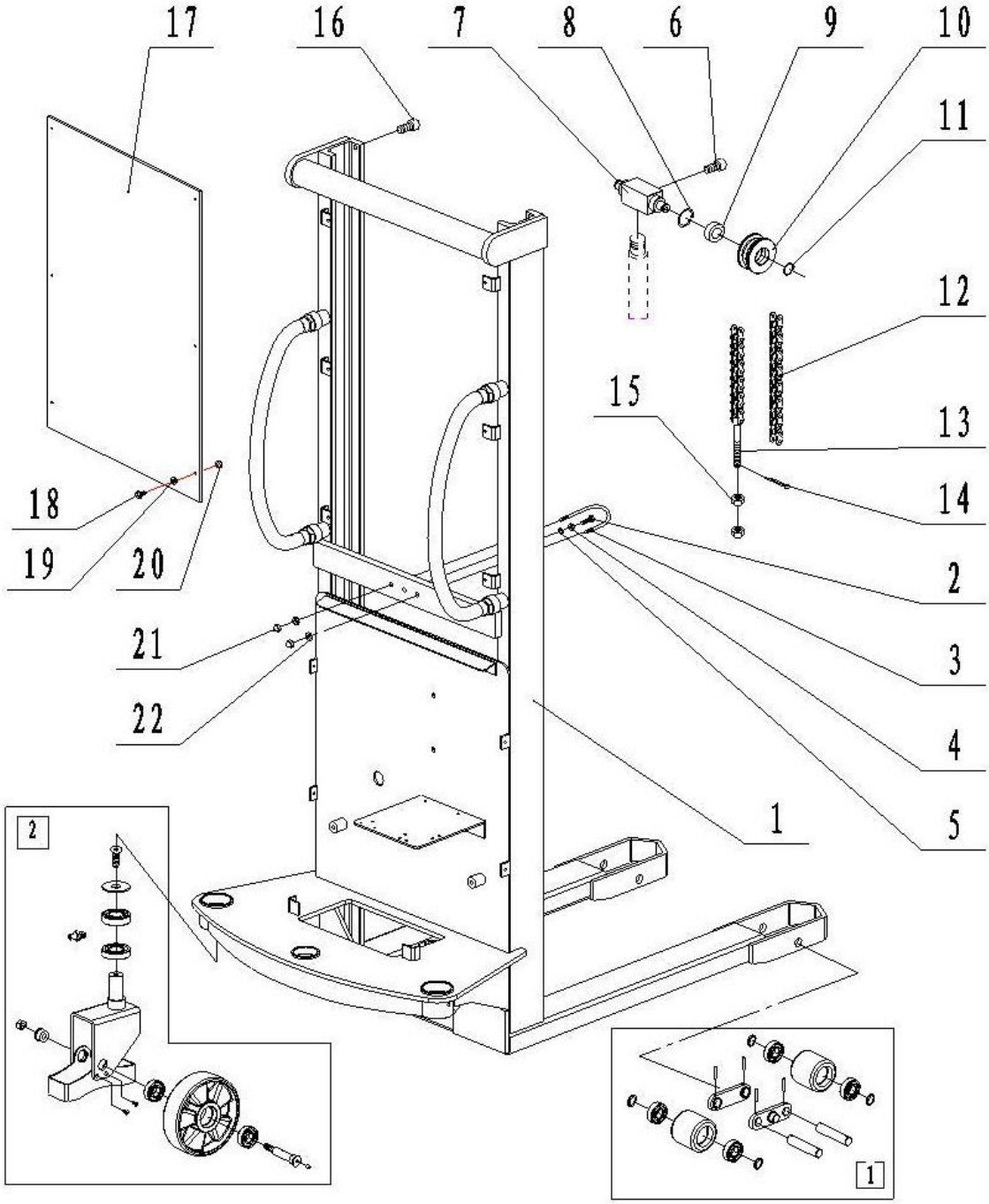

Fig.3 Parts List of Portable Single Mast

No.	Code number	Item	Quantity	Remarks
1	2530501008	Single mast	1	1600
2	0000023495	Bolt M10x40	1	
3	2530202001	Cylinder hoop	1	
4	0000024091	Hex nut M10	1	
5	0000025106	Flat washer 10	1	
6	0000023013	Screw M8x16	1	
7	2500502005	Footstock	1	
8	0000026009	Circlip for hole 47	2	
9	0000027107	Bearing 62042Z	2	
10	2500502002	Chain wheel	2	
11	0000026003	Circlip for shaft 20	2	
12	0000029273	Chain 12A-1（69 joint）	2	
13	2500502007	Chain rod	2	
14	0000028076	Cotter pin 2x25	2	
15	0000024087	Hex nut M14	4	
16	0000023513	Screw M10x16	2	
17	2530503002	Protection plate	1	
18	0000023488	Screw M6x16	6	
19	0000025007	Flat washer 6	6	
20	2210618001	Rubber cushion	6	
21	0000024092	Cap nut M8	2	
22	0000024086	Hex nut M8	2	
□,1	2500500009	Front wheel assembly	2	
□,2	2500500007	Big wheel assembly	1	

Fig.4 Stationary Single Mast

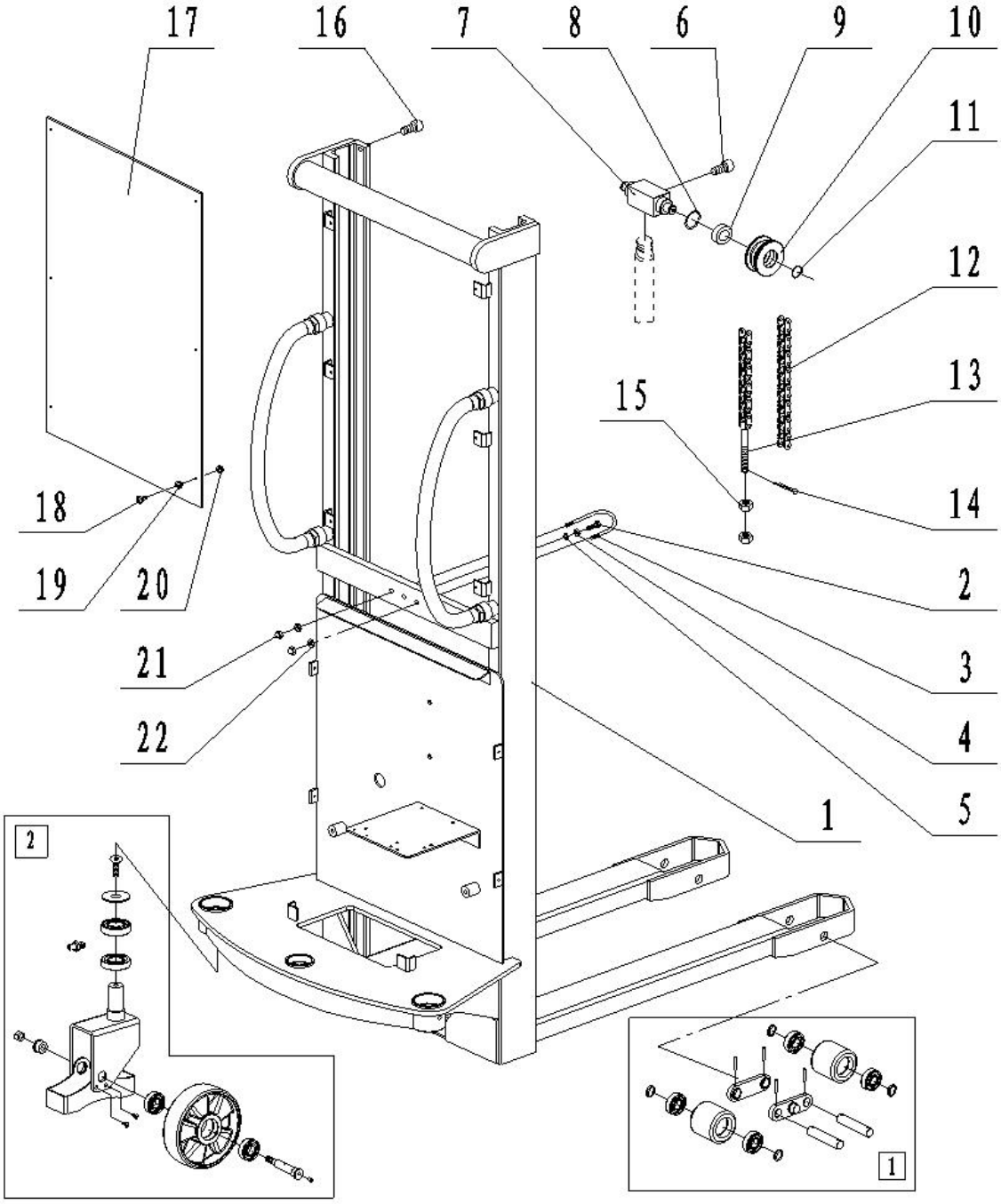

Fig.4 Parts List of Stationary Single Mast

No.	Code number	Item	Quantity	Remarks
1	2530501007	Single mast	1	1600
2	0000023495	Bolt M10x40	1	
3	2530202001	Cylinder hoop	1	
4	0000024091	Hex nut M10	1	
5	0000025106	Flat washer10	1	
6	0000023013	Screw M8x16	1	
7	2500502005	Footstock	1	
8	0000026009	Circlip for hole 47	2	
9	0000027107	Bearing 62042Z	2	
10	2500502002	Chain wheel	2	
11	0000026003	Circlip for shaft 20	2	
12	0000029272	Chain 12A-1（67 joint）	2	
13	2500502007	Chain rod	2	
14	0000028076	Cotter pin 2x25	2	
15	0000024087	Hex nut M14	4	
16	0000023513	Screw M10x16	2	
17	2530503001	Protection plate	1	
18	0000023488	Screw M6x16	6	
19	0000025007	Flat washer 6	6	
20	2210618001	Rubber cushion	6	
21	0000024092	Cap nut M8	2	
22	0000024086	Hex nut M8	2	
□,1	2500500009	Front wheel assembly	2	
□,2	2500500007	Big wheel assembly	1	

Fig.5 Big Wheel Assembly

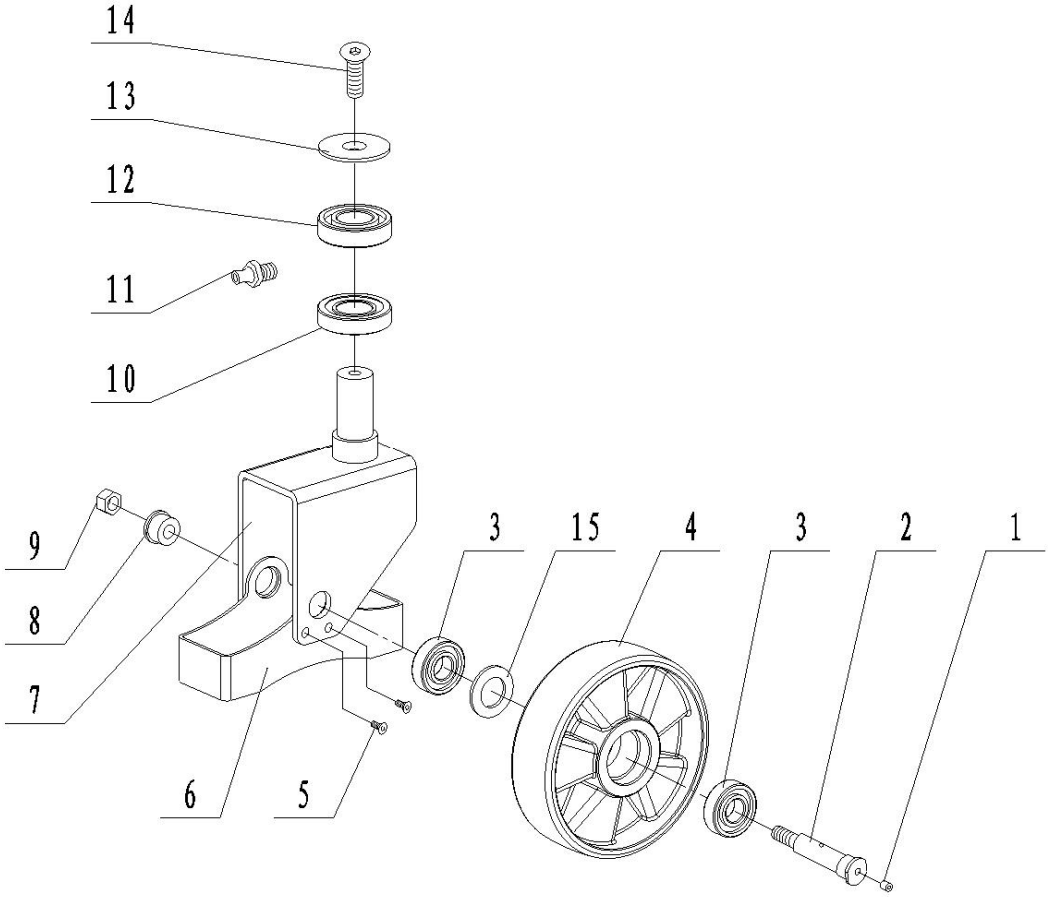

Fig.5 Parts List of Big Wheel Assembly

No.	Code number	Item	Quantity	Remarks
1	1010530001	Angled grease cup 6	1	
2	2500507001	Big wheel shaft	1	
3	0000027107	Bearing 62042Z	2	
4	2500516001	Big wheel Φ180x50	1	White
	2530516001	Big wheel Φ180x50		Black
	2800116001	PU Big wheel Φ180x50		Red
	2530516003	PU Big wheel Φ180x50		Yellow
5	0000023484	Sunk screw M6x10	4	
6	2500504002	Safety damper	1	
7	2500501012	Driven wheel frame	1	
8	2500525002	Washer	1	
9	0000024085	Lock nut M12	1	
10	0000027066	Roller bearing 30206	1	
11	0000030026	Greasing cup M8x1	1	
12	0000027012	Bearing 6206	1	
13	2500502006	Gland	1	
14	0000023867	Sunk screw M10x20	1	
15	2500502010	Washer	1	

Fig.6 Front Wheel Assembly

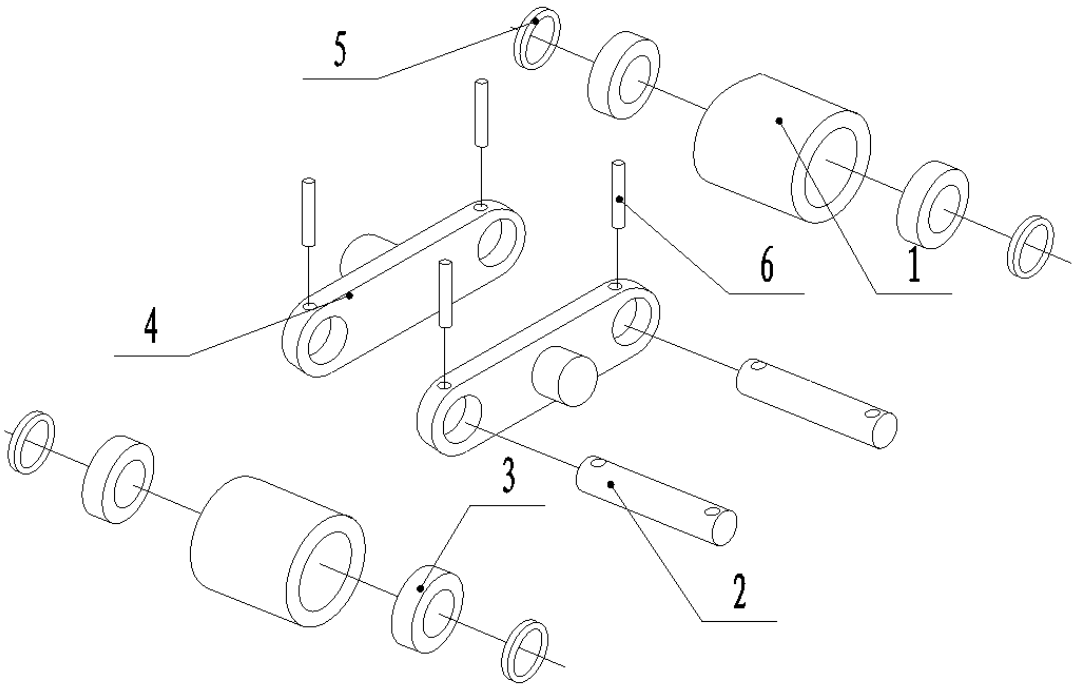

Fig.6 Parts List of Front Wheel Assembly

No.	Code number	Item	Quantity	Remarks
1	2500516002	Pinion Φ74X70	2	
	2520500003	PU Pinion Φ74X70		Red
	2530516004	PU Pinion Φ74X70		Yellow
2	2000407001	Pinion shaft	2	
3	0000027107	Bearing 62042Z	4	
4	2000405002	Linking board	2	
5	1000525001	Spacer	Quantity, specification optional	
6	0000028009	Elastic cylindrical pin 5x35	4	

Fig.7 Inner Mast

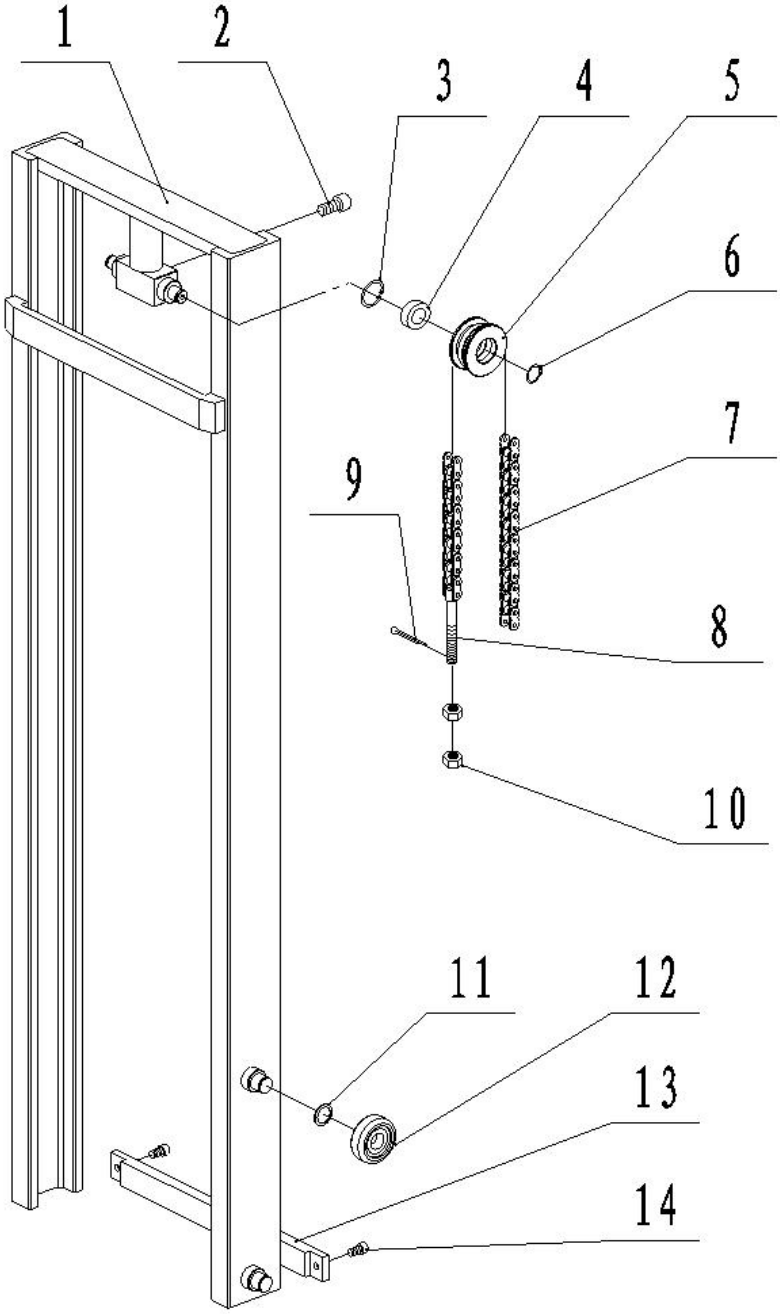

Fig.7 Parts List of Inner Mast

No.	Code number	Item	Quantity	Remarks
1	2530501006	Inner mast	1	2500 Portable
	2530501013			3000 Portable
	2530501014			3350 Portable
	2530501004			2500 Stationary
	2530501011			3000 Stationary
	2530501012			3350 Stationary
2	0000023013	Screw M8x16	1	
3	0000026009	Circlip for hole 47	2	
4	0000027107	Bearing 62042Z	2	
5	2500502002	Chain wheel	2	
6	0000026003	Circlip for shaft 20	2	
7	0000029267	Chain 12A-1（91 joint）	2	2500 Stationary
	0000029268	Chain 12A-1（95 joint）		2500 Portable
	0000029266	Chain 12A-1（105 joint）		3000 Stationary
	0000029269	Chain 12A-1（109 joint）		3000 Portable
	0000029270	Chain 12A-1（115 joint）		3350 Stationary
	0000029271	Chain 12A-1（119joint）		3350 Portable
8	2500502007	Chain rod	2	
9	0000028076	Cotter pin 2x25	2	
10	0000024087	Hex nut M14	4	
11	2530402001	Adjusting cushion	4	
12	2530402002	Roller	4	
13	2530504005	Pull rod	1	Stationary
	2530504006			Portable
14	0000023483	Screw M10X20	2	

Fig.8 Steering Operating System

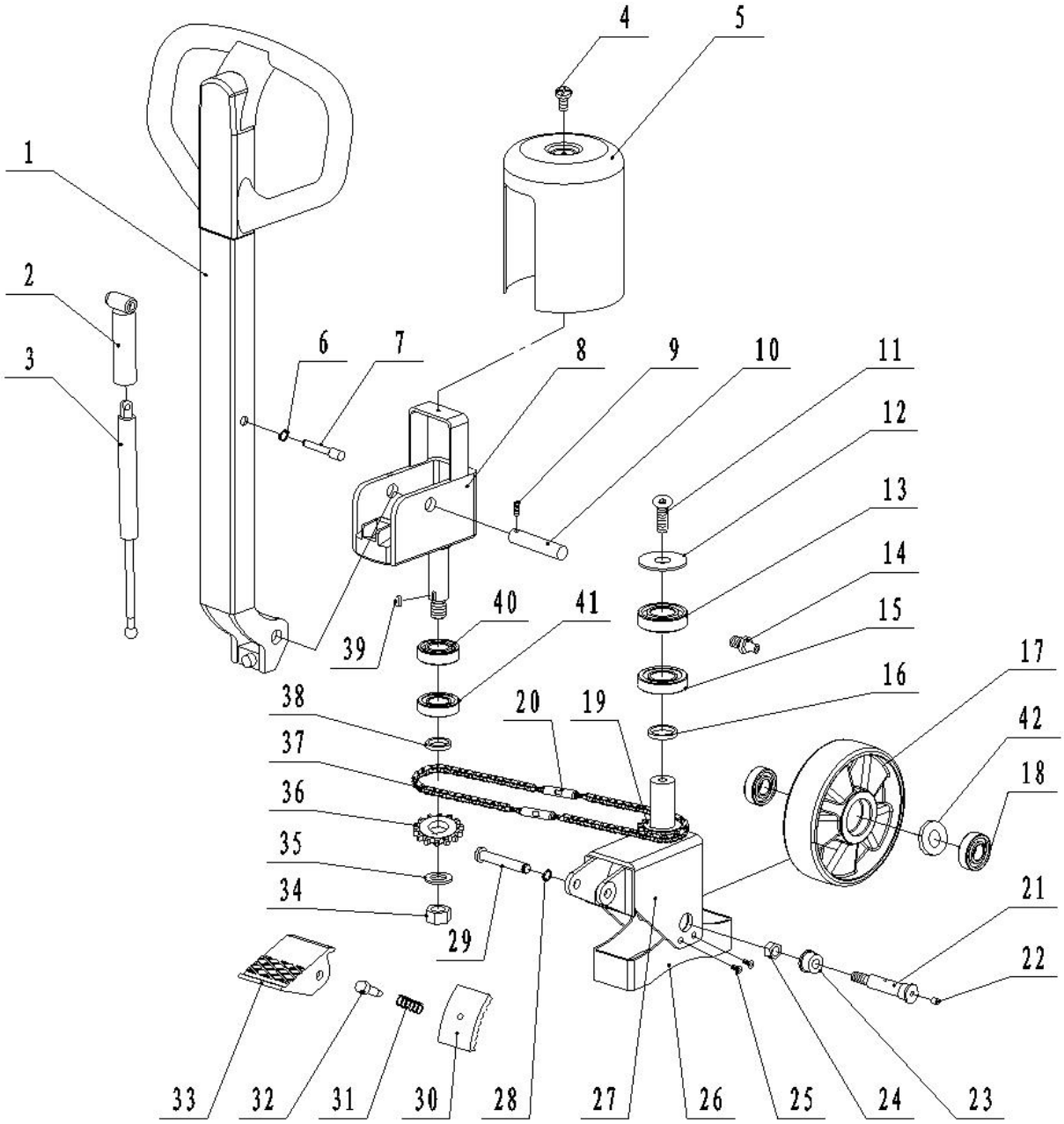

Fig.8 Parts List of Steering Operating System

No.	Code number	Item	Quantity	Remarks
1	2530100002	Handle	1	
2	2530102001	Air spring seat	1	
3	2530121001	Air spring(handle)	1	
4	0000023280	Screw M5X10	1	
5	2530103001	Handgrip rotating seat cover	1	
6	0000026051	Circlip 8	1	
7	2530107002	Air spring shaft	1	
8	2530101001	Handle connection seat	1	
9	0000023511	Set screw M5x12	1	
10	2530107001	Handle lever	1	
11	0000023867	Sunk screw M10x20	1	
12	2500502006	Gland	1	
13	0000027012	Bearing 6206	1	
14	0000030026	Greasing cup M8x1	1	
15	0000027066	Roller bearing 30206	1	
16	2500125002	Washer	1	
17	2500516001	Big wheel Φ180x50	1	
	2800116001	PU Big wheel		
	2530516003	PU Big wheel(Yellow)		
	2530516002	PU Big wheel(Black)		
18	0000027107	Bearing 62042Z	2	
19	2500109002	Steering chain wheel	1	
20	2500100003	Tension screw	2	
21	2500507001	Big wheel shaft	1	
22	1010530001	Angled grease cup 6	1	
23	2500525002	Washer	1	
24	0000024085	Lock nut M12	1	
25	0000023484	Sunk screw M6x10	4	
26	2500504002	Safety damper	1	
27	2500501011	Braking wheel frame	1	
28	0000026034	Circlip for shaft 12	1	
29	2500507002	Hinge pin	1	
30	2500505001	Brake block	1	
31	2500531001	Spring	1	

32	2500523002	Push rod screw	1	
33	2500505002	Cam footpedal	1	
34	0000024095	Lock nut M18x1.5	1	
35	0000025104	Flat washer 18	1	
36	2500109001	Steering chain wheel	1	
37	0000029274	Roller drive chain（08B）	2	
38	2500125001	Washer	1	
39	0000036010	Flat pin C6X6	2	
40	0000027011	Bearing 6205	1	
41	0000027069	Roller bearing 30205	1	
42	2500502010	Washer	1	

Fig.9 Stationary Pallet Frame

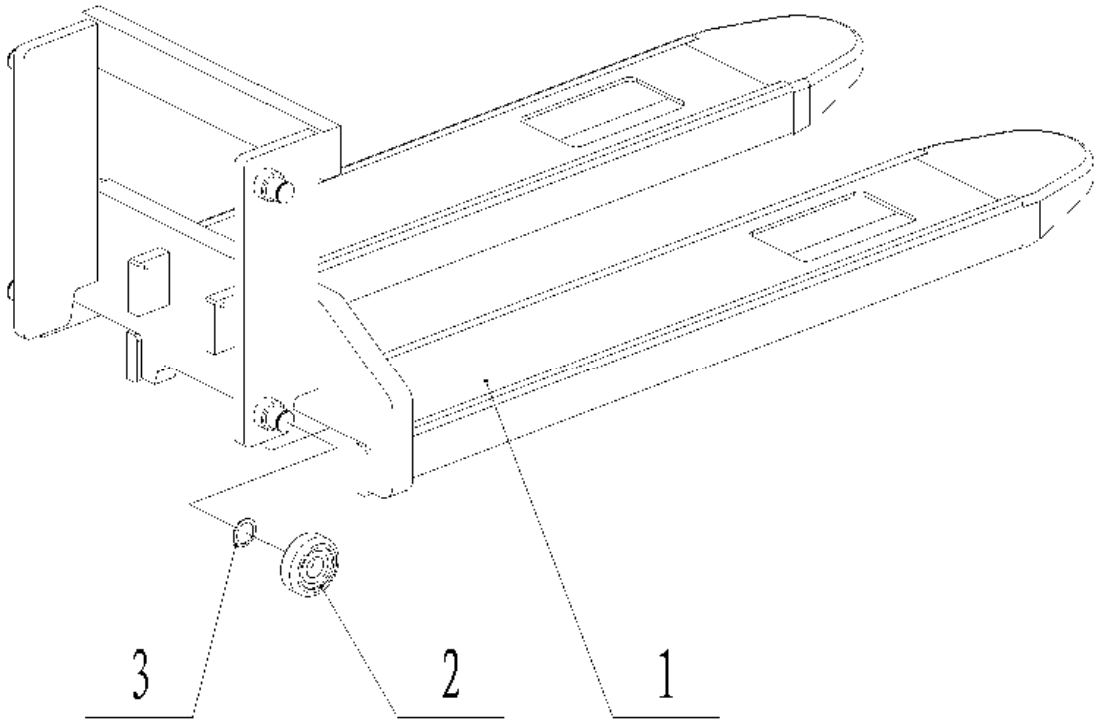

Fig.9 Parts List of Stationary Pallet Frame

No.	Code number	Item	Quantity	Remarks
1	2530401014	Pallet frame	1	1100 for double mast
	2530401002			1150
	2530401004	Pallet frame	1	1100 for single mast
	2530401015			1150
2	2530402002	Roller	4	
3	2530402001	Adjusting cushion	4	

Fig.10 Portable Pallet Frame

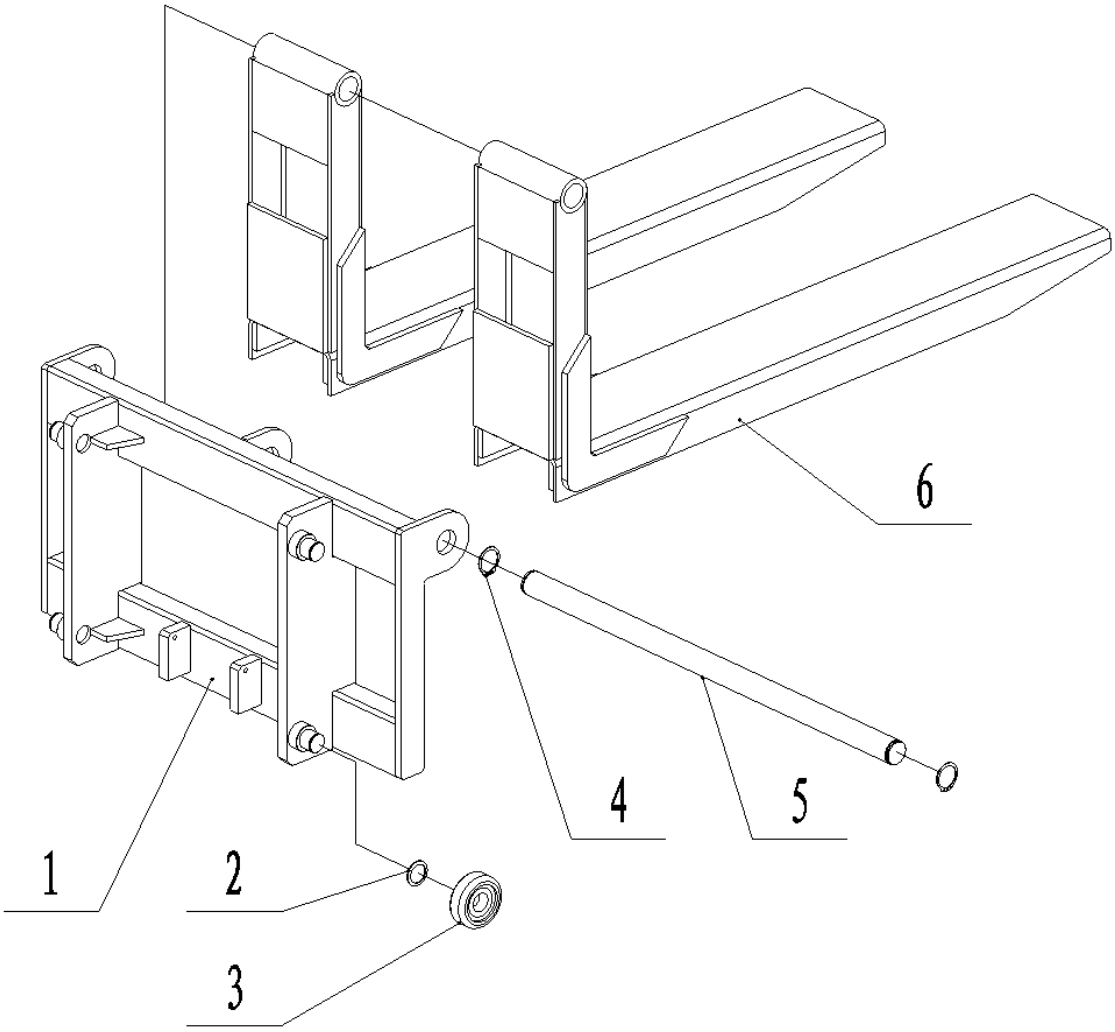

Fig.10 Parts List of Portable Pallet Frame

No.	Code number	Item	Quantity	Remarks
1	2530401003	Pallet frame	1	For double mast
	2530401006	Pallet frame		For single mast
2	2530402001	Adjusting cushion	4	
3	2530402002	Roller	4	
4	0000026042	Circlip for shaft 32	2	
5	2500407001	Long shaft	1	
6	2500401001	Fork	2	900 for double mast
	2500401013			1100
	2500401014			1150
	2510101002	Fork	2	900 for single mast
	2500401015			1100
	2500401016			1150

Fig.11 Hydraulic System

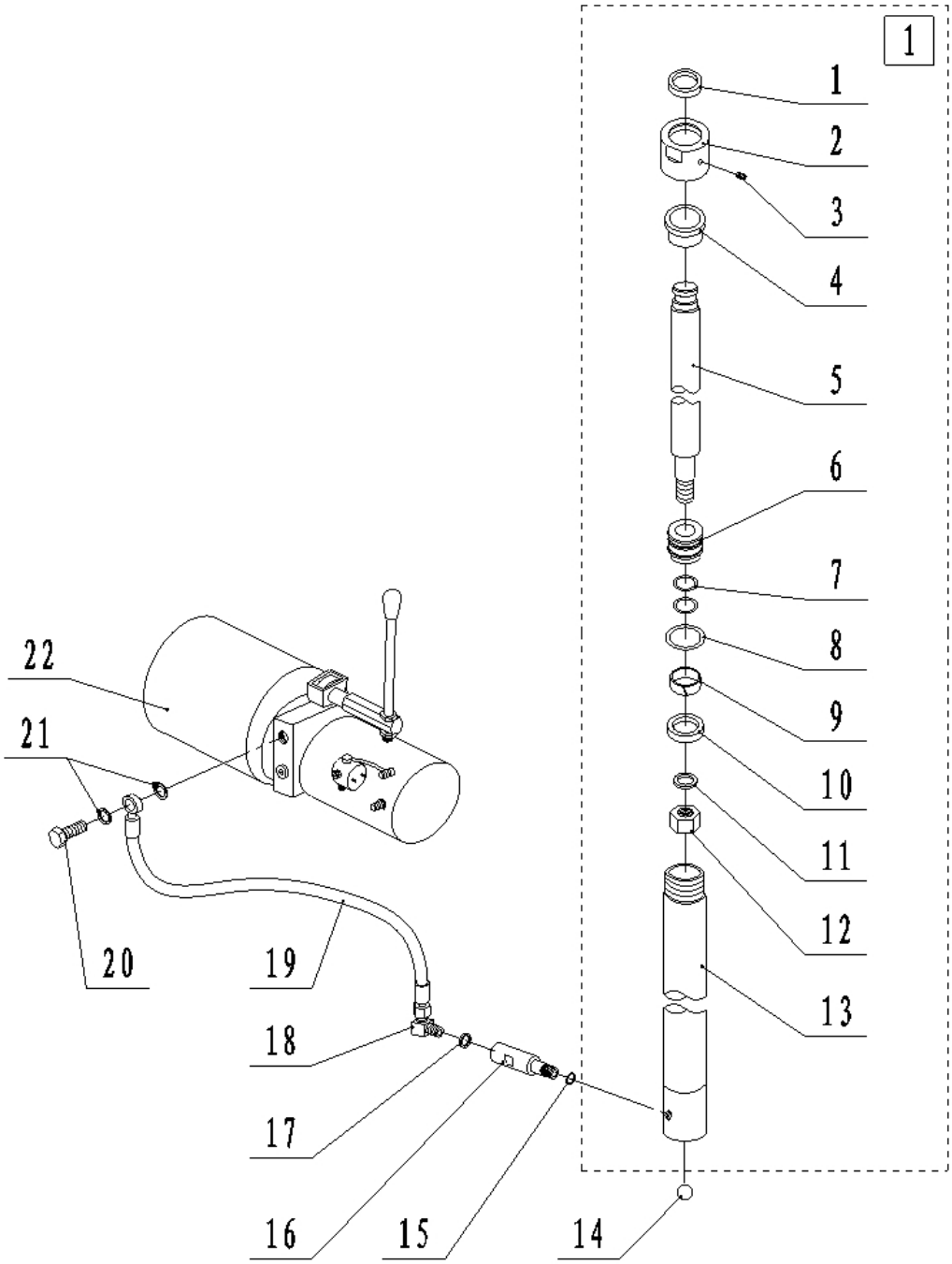

Fig.11 Parts List of Hydraulic System

No.	Code number	Item	Quantity	Remarks
1	0000022114	Dust ring 40X48-5/6.5	1	
2	2520202001	Shielding cover	1	
3	0000023502	Set screw M6X6	1	
4	1050302003	Bushing	1	
5	2520207001	Piston rod	1	1600
	2520207002			2500
	2520207003			3000
	2520207006			3350
6	2520202002	Piston Φ50	1	
7	0000022115	O-ring 32x2.4	2	
8	0000022029	O-ring 50x3.1	1	
9	2520202003	Support ring for hole 50X15X2.5	1	
10	0000022116	Y-type sealing ring for shaft 50X40X6	1	
11	0000025094	Spring washer 24	1	
12	0000024072	Hex nut M24X1.5	1	
13	2520208001	Cylinder	1	1600
	2520208002			2500
	2520208003			3000
	2520208006			3350
14	0000037028	Steel ball 18	1	
15	0000022118	O-ring 18x2.4	1	
16	2520200004	Speed control valve	1	
17	0000022051	Washer assembly 16	1	
18	2520202007	Bend (1)	1	
19	2530217001	High pressure oil pipe	1	
20	2530217002	Oil pipe bolt	1	
21	0000022051	Washer assembly 16	2	
22	2530200002	Pump station 12V-1.6kw-2.1CC	1	
□, 1	2520200012	Cylinder assembly	1	2500
	2520200005			3000
	2520200006			1600
	2520200008			3350

Fig.12 Distribution Box Components

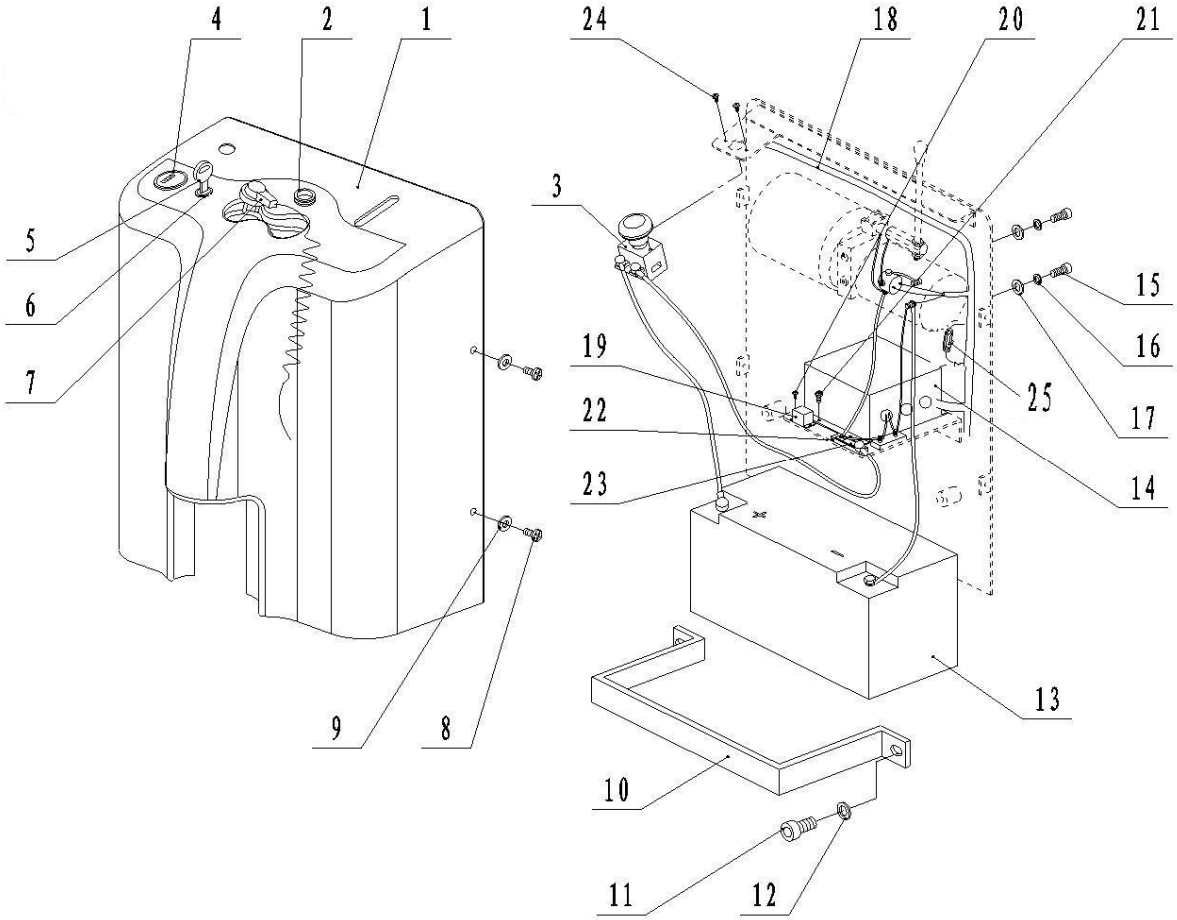

Fig.12 Distribution Box Components

No.	Code number	Item	Quantity	Remarks
1	2530303002	Electrical box	1	
2	2210418003	Sheath	1	
3	2240434001	DC power switch ZDK31-250	1	
4	2530334003	Coulombmeter 12V BI1201A(B)	1	
5	1010434015	Key	1	
6	2530334002	Key switch LKS-101A	1	
7	1010434009	Double-end spring plug 3x0.75（Australian）	1	
	1010434011	Double-end spring plug 3x0.75（English）		
	1010434012	Double-end spring plug 3x0.75（European）		
	1010434013	Double-end spring plug 3x0.75（Italian）		
	1010434014	Double-end spring plug 3x0.75（Swedish）		
	2530334005	Double-end spring plug 3x0.75（American）		
	1010434023	Double-end spring plug 3x0.75（Asian）		
8	0000023512	Screw M6x10	4	
9	0000025007	Flat washer 6	4	
10	2530304001	Battery presure plate	1	
11	0000023013	Screw M8x16	2	
12	0000025004	Spring washer 8	2	
13	2530332001	Battery 12V150AH	1	
14	2530320001	Charger 12V/20A QQE240-5CH20-26-A	1	230V
	2530320002			115V
15	0000023483	Screw M10x20	2	
16	0000025065	Spring washer 10	2	
17	0000025106	Flat washer 10	2	
18	2530333001	SPM harness	1	
19	2530334004	Protection module BD-V-12	1	
20	0000023052	Screw M4x8	2	
21	0000023512	Screw M6x10	4	
22	1000434007	Fuse seat SYY	1	
23	1020434001	Bolted fuse 200A	1	
24	0000023126	Screw M5x12	2	
25	2500334006	Fuse tube 6x30 6A	1	

Fig.13 Pump Station Components

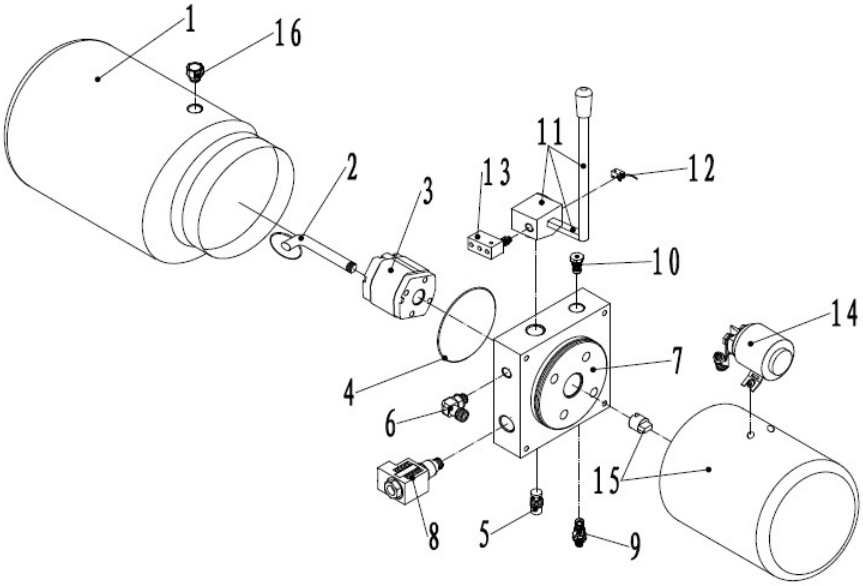

Fig.13 Pump Station Components

No.	Code number	Item	Specification	Quantity	Remarks
1	2500237006	Oil tank	TS120D300	1	
2	2500217001	Oil suction pipe	FB03B	1	with strainer
3	2500237001	Gear pump	CBK-F120	1	with bolt
4	2500222001	O-ring	112*4	1	
5	2500215001	Flow control valve	RPCV-02	1	
6	2500237002	Joint	FVC06	1	
7	2530237011	Center valve block	CMB2	1	
8	2530337012	Solenoid valve	SCV-012E	1	
9	2500235002	Overflow valve	RV-03	1	
10	2500235003	Check valve	CV-O1	1	
11	900002213	Hand valve	MV-03	1	
12	2500214001	Upper micro switch	UMS	1	
13	2500214002	Under micro switch	DMS	1	
14	2500214003	Starting switch	DK0212	1	
15	2500237004	Motor	MD12160	1	
16	2500237005	Oil tank cover	FC04	1	
17	2530337014	Carbon brush		1	