Print Number: Print Date:

NOBLELIFT
Material Handling

Scan QR Code for More

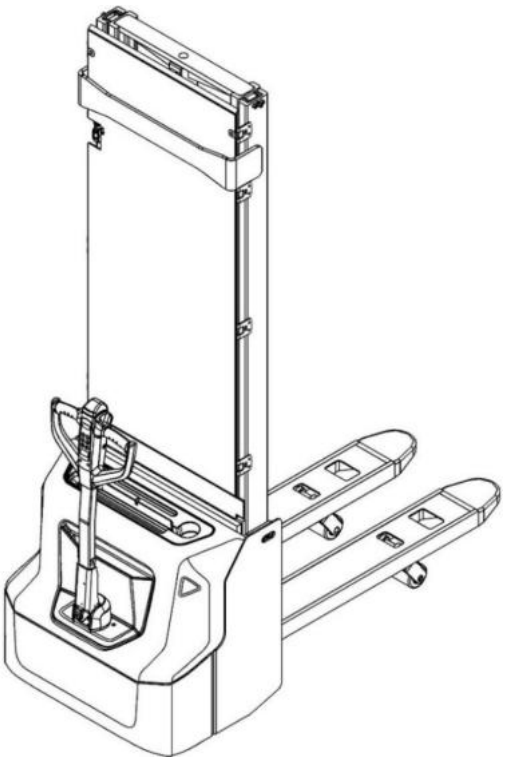

Electric Pallet Stacker PSE12BD/PSE12ND

PARTS MANUAL

562346020101

Version: V03

Truck Identification Number From:

Parts Manual PSE12BD/PSE12ND-PM03EN

Please order parts from authorized dealers of Noblelift Intelligent Equipment Co., LTD. In order to avoid wrong delivery, all the orders for spare parts should specify the following items:

- Truck model, identification number and manufacture year.
- Orders for spare parts of mast, hydraulic transmission unit, steering axle, motor, etc. shall indicate the manufacture number of these parts.
- Codes for Noblelift spare parts are shown in the table of parts manual. Please also pay attention to the description of supply status, order quantity, etc. (check the number listed in "Mark" column of the parts manual).

"Mark" Column:

The unmarked indicates the parts are in short supply cycle.

Number 1: supply as package. Indicating these that parts are small parts and seal parts, which are supplied in package unit and in short supply cycle.

Number 2: supply with constraints. Indicating that these spare parts are not in stock and will be prepared for production after receiving the order from customers, which are in long supply cycle.

Number 3: phasing-out supply. Indicating that these parts will be replaced by new parts due to technical improvements and the current stock will not be available when these parts run out. Please check the description of technical improvements notice.

Number 4: supply as assembly. Indicating that these parts are assembly parts defined by manufacture process, which cannot be supplied as a single part.

Number 5: check other tables.

This parts manual is the property of Noblelift and can be shared under the confidential agreement only, Noblelift has the right to claim for compensation of any unauthorized use. Copy without permission is not allowed. Figures in the manual are not limited by the original design. Noblelift Intelligent Equipment Co., LTD reserves the right to improve the products for continuous technology progress.

TABLE OF CONTENTS

Chapter 1: Drive system 1
01 Drive unit (532246013501) 1
02 Drive assembly (532246013001) 3
03 Motor assembly (532246013002) 5
Chapter 2: Hydraulic system 7
01 Hydraulic unit (562346024001) 7
02 Pump unit (532246023501) 9
Chapter 3: Truck structure 11
01 Truck frame (562346021501) 11
02 Truck frame (562346021502) 13
03 Forks (562346038001) 15
04 Battery holder (532246012501) 17
05 Battery holder (lithium battery) (532246012502) 19
06 Control panel assembly (532246010001) 21
Chapter 4: Steering system, braking system and wheels 23
01 Tiller (562346011001) 23
02 Tiller head (562346011002) 25
02 Tiller head (562346011002) continuation 27
03 Load wheel (562346017001) 29
04 Side wheel (532246016501) 31
05 Manual steering (532246031201) 33
Chapter 5: Mast system 35
01 Two stage mast (562346044001) 35
01 Two stage mast (562346044001) continuation 37
01 Two stage mast (562346044001) continuation 39
02 Single mast (562346043001) 41
02 Single mast (562346043001) continuation 43
03 Pull rod assembly (562346044002) 45
Chapter 6: Electrical parts and wire harness 47
01 Wire harness (532246033001) 47
02 Wire harness (lithium battery) (532246033002) 49
03 Electrical control unit (562346033003) 51
04 Charger (532246036501) 53
Chapter 7: Special equipment 55
01 Load backrest (532246040501) 55
02 Load backrest (Single mast) (532246040502) 57
Chapter 8: Others 59
01 Labels and decals (EU) (562346047001) 59
02 Labels and decals (USA) (562346047002) 61
Appendix 63
01 Electrical circuit diagram (lead-acid battery) (562346045501) 63
02 Electrical circuit diagram (Lithium battery) (562346045502) 64
03 Hydraulic circuit diagram (562346045503) 65
04 Easy worn parts list 66

Chapter 1: Drive system

01 Drive unit (532246013501)

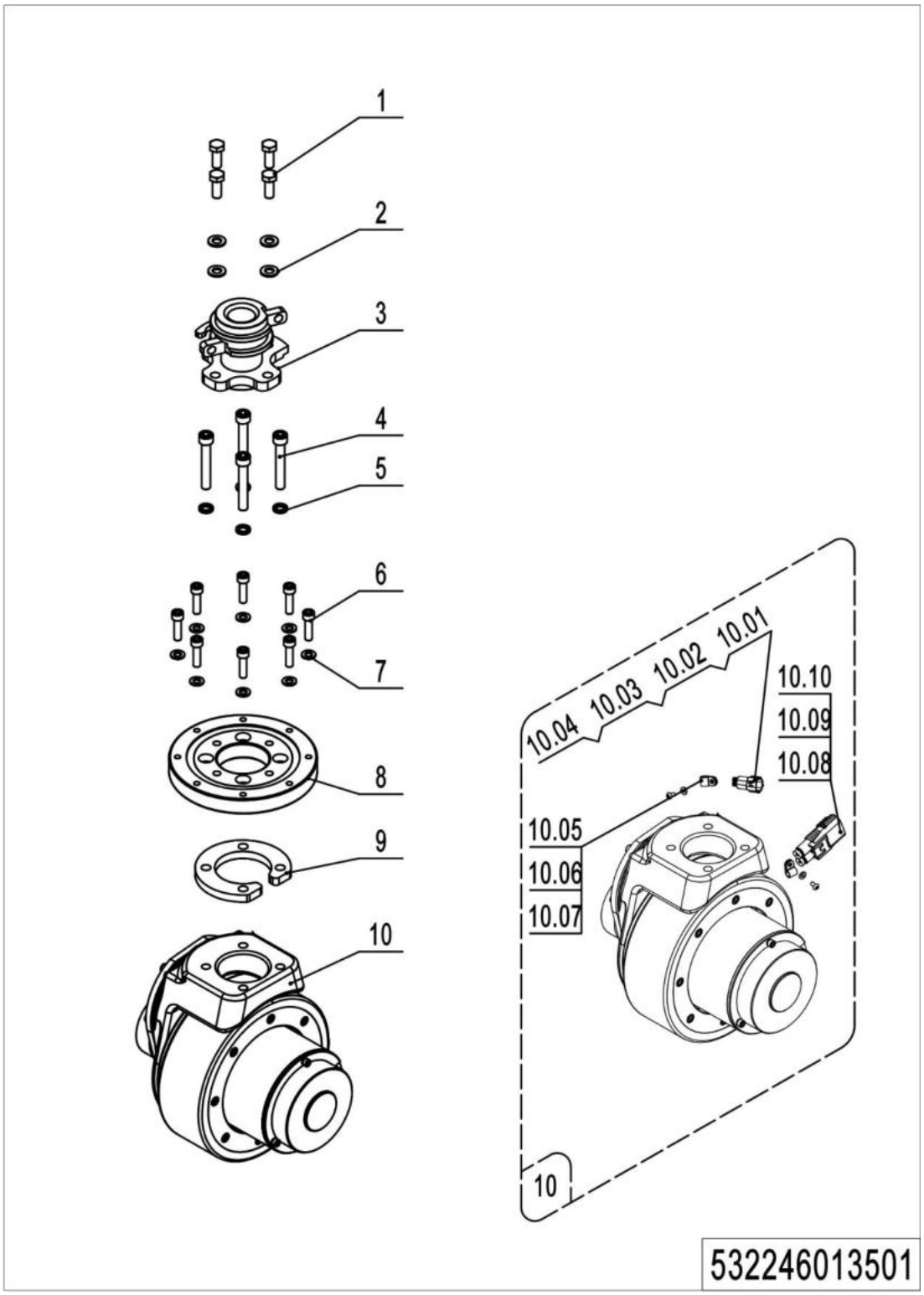

01 Drive unit (532246013501)

No.	Item Code	Mark	Item Description	Qty.	Substitute	Note
1	910100300036	1	Bolt	4		
2	910400100007	1	Flat Washer	4		
3	532231210005		Drive Shaft	1		
4	910200200079	1	Screw	4		
5	910400500007	1	Spring Washer	4		
6	910200200138	1	Screw	8		
7	910400100006	1	Flat Washer	8		
8	532213520001		Slewing Bearing	1		
9	532213520002		Plate	1		
10	508098510078	5	Drive Unit	1		PU wheel
	508098510079	5	Drive Unit	1		Anti-skip wheel
10.01	920400200004	1	Connector	1		
10.02	920400200003	1	Connector	1		
10.03	920400200017	1	Connector	2		
10.04	920400200018	1	Connector	2		
10.05	910200700001	1	Screw	2		
10.06	910400100003	1	Flat Washer	2		
10.07	921300200001		Cable Clamp	2		
10.08	920400200169	1	Connector	1		
10.09	920400200150	1	Connector	2		
10.10	920400200171	1	Connector	2		

02 Drive assembly (532246013001)

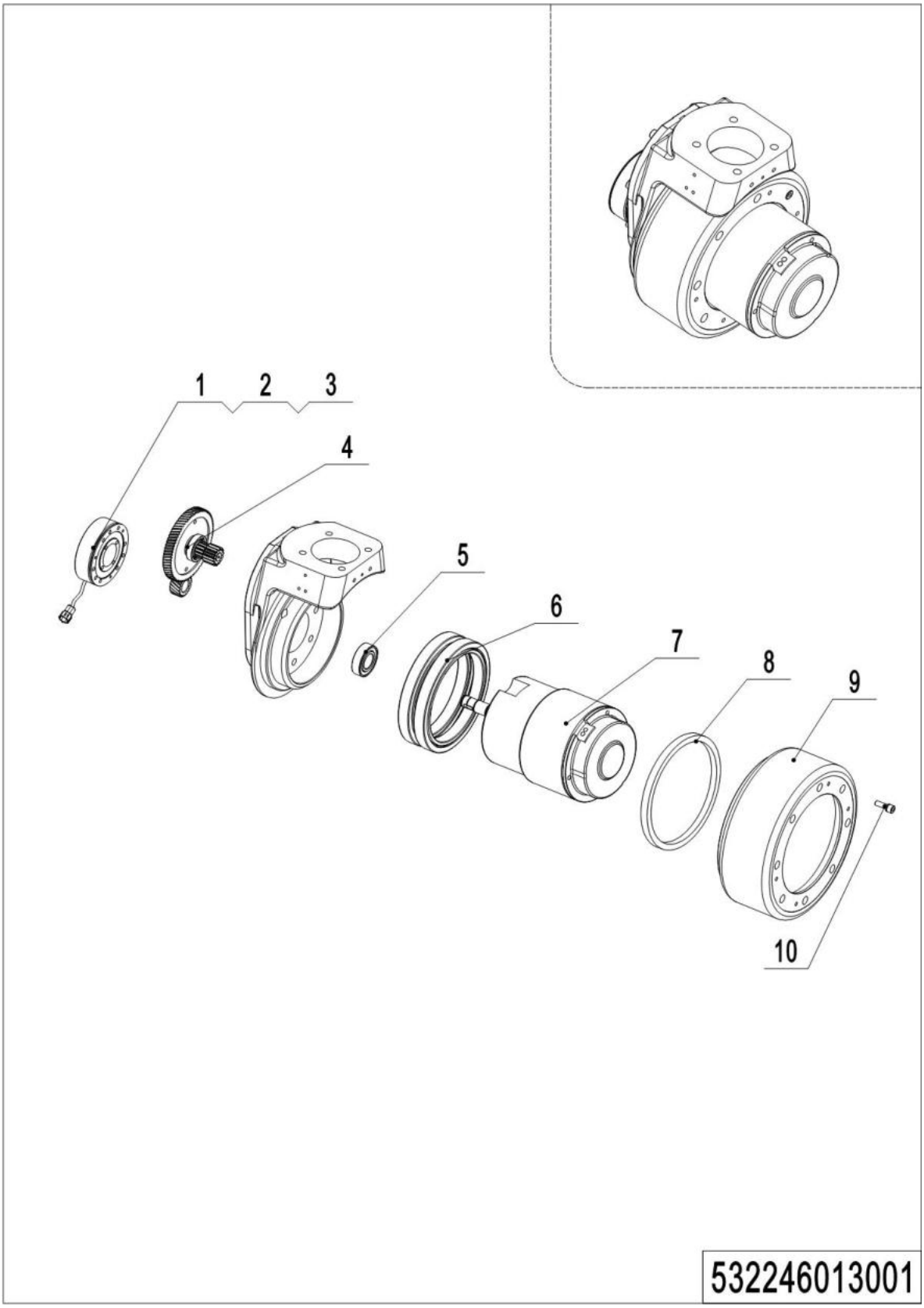

1=Supply as package; 2=Supply with limit; 3=Phasing out supply; 4=Supply as assembly; 5=Check other lists.

02 Drive assembly (532246013001)

No.	Item Code	Mark	Item Description	Qty.	Substitute	Note
--	508098510078		Drive Unit	1		PU wheel
	508098510079		Drive Unit	1		Anti-skip wheel
1	508098520002	2	Brake	1		
2	508098520040	2	Rubber Strip	1		
3	910200200019	1	Screw	3		
4	508098510015	2	Gear Components	1		
5	910700200004	2	Bearing	1		
6	508098520011	2	Gear Ring	1		
7	508098510016	5	Motor	1		Check 532246013002
8	508098520032	2	Seal	1		
9	508098520003		Wheel	1		
	508098520026		Wheel	1		
10	910200200167	1	Screw Kits	8		

03 Motor assembly (532246013002)

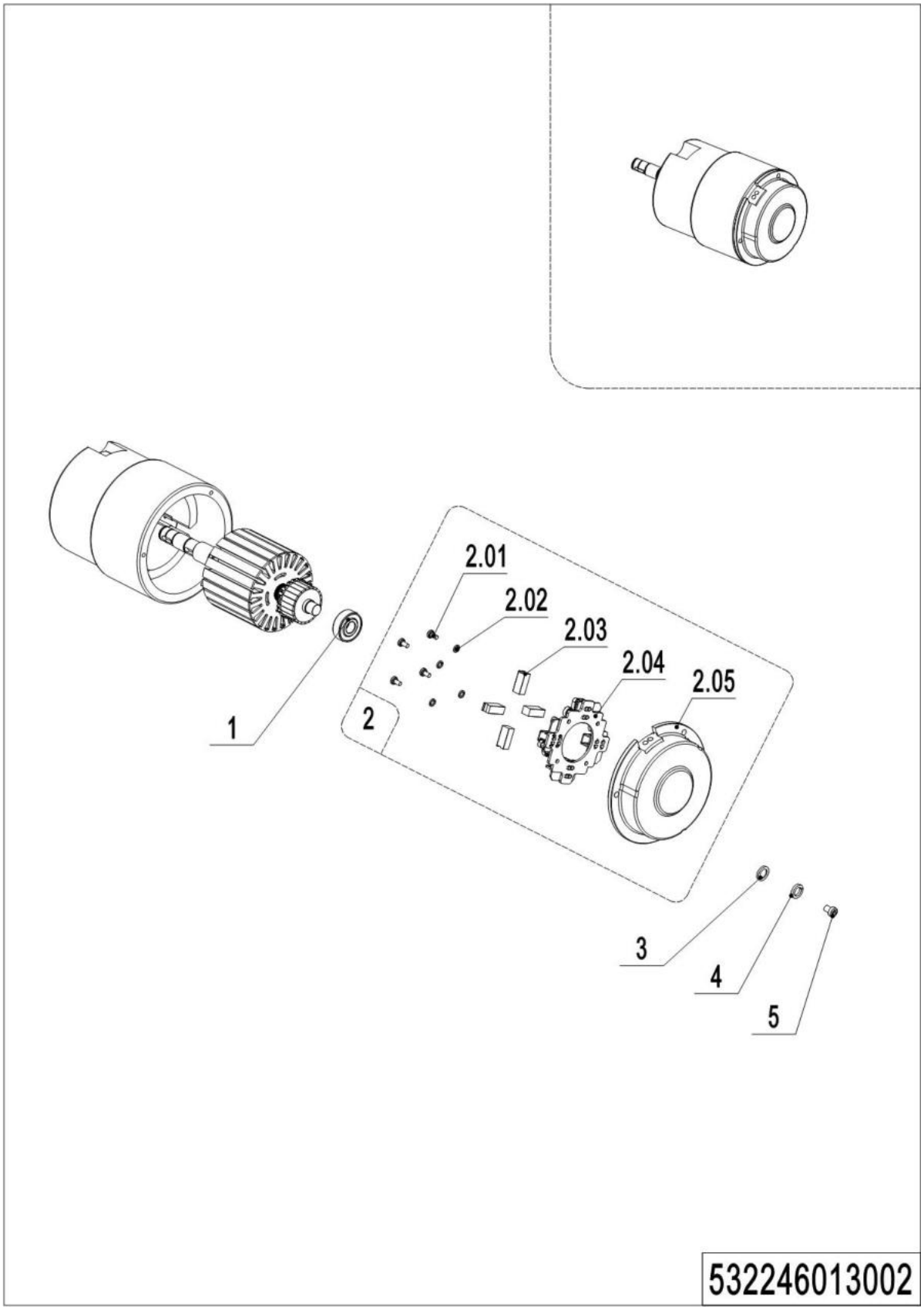

1=Supply as package; 2=Supply with limit; 3=Phasing out supply; 4=Supply as assembly; 5=Check other lists.

03 Motor assembly (532246013002)

No.	Item Code	Mark	Item Description	Qty.	Substitute	Note
--	508098510016	2	Motor	1		
1	910700200016	2	Bearing	1		
2	508098510074	2	End Cap	1		
2.01	910200500034	1	Screw	4		
2.02	910400500003	1	Spring Washer	4		
2.03	508098520000	2	Carbon Brush	4		
2.04	508098520001	2	Carbon Brush Holder	1		
2.05	508098520036	2	End Cap	1		
3	910400100002	1	Flat Washer	3		
4	910400500002	1	Spring Washer	3		
5	910200200023	1	Screw	3		

Chapter 2: Hydraulic system

01 **Hydraulic unit** (562346024001)

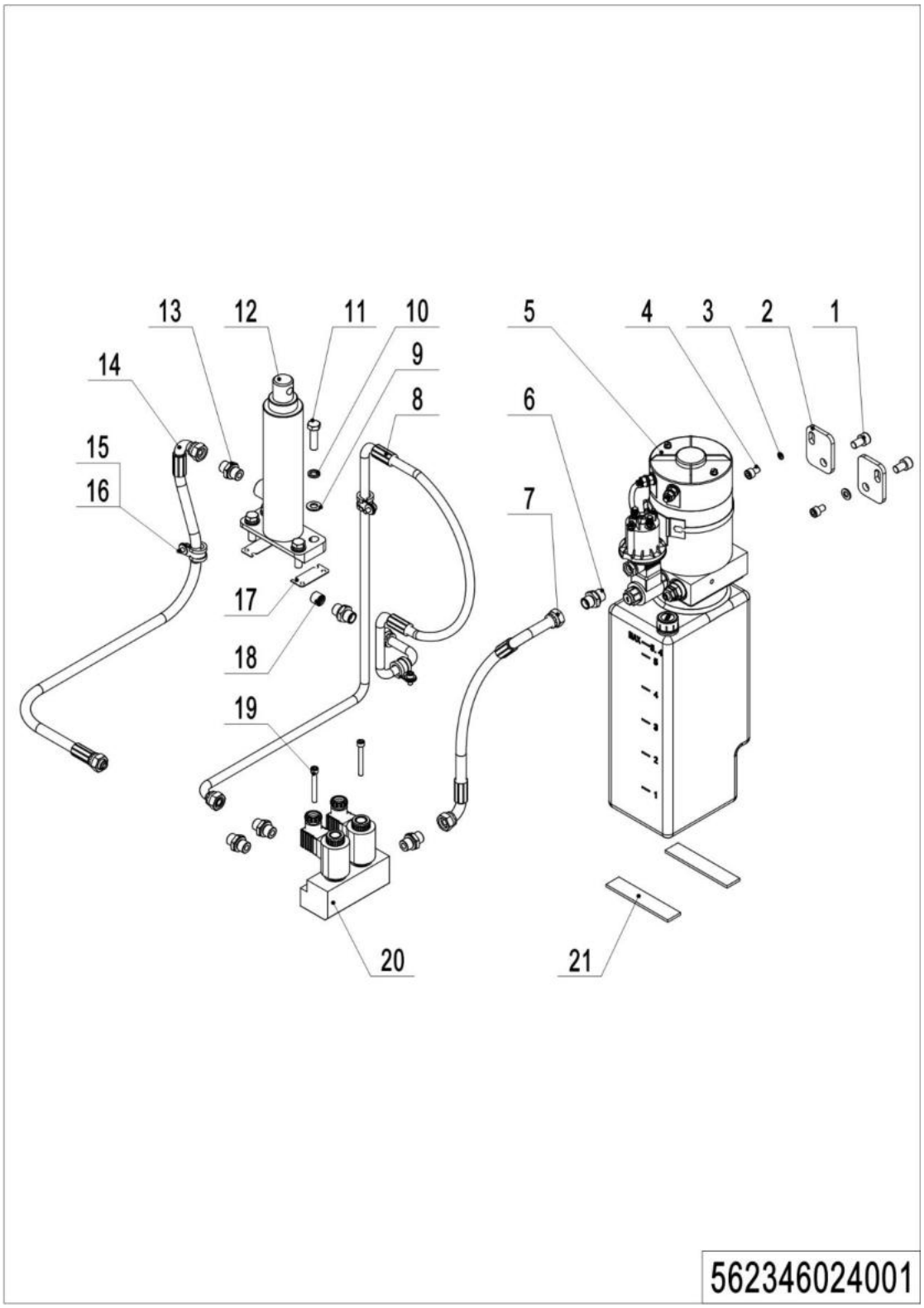

01 Hydraulic unit （562346024001)

No.	Item Code	Mark	Item Description	Qty.	Substitute	Note
1	910200200074	1	Screw	2		
2	532223520001		Plate	2		
3	910400100006	1	Flat Washer	2		
4	910200200053	1	Screw	2		
5	----------	5	Pump Unit	1		Check 532246023501
6	950400300007		Joint	1		
7	562324510005		Hose	1		
8	562324510004		Hose	1		
9	910400100007	1	Flat Washer	4		
10	910400500007	1	Spring Washer	4		
11	910100300038	1	Bolt	4		
12	562324510001		Cylinder	1		
13	950400400003		Joint	5		
14	562324510003		Hose	1		
15	910200200033	1	Screw	3		
16	951000100003		Hose Clamp	3		
17	562324520001		Plate	2		
	562324520002		Plate	2		
18	950600300001		Safety Valve	1		
19	910200200043	1	Screw	2		
20	562324510002		Valve Block	1		
21	532223520010		Crash Pad	2		

02 Pump unit (532246023501)

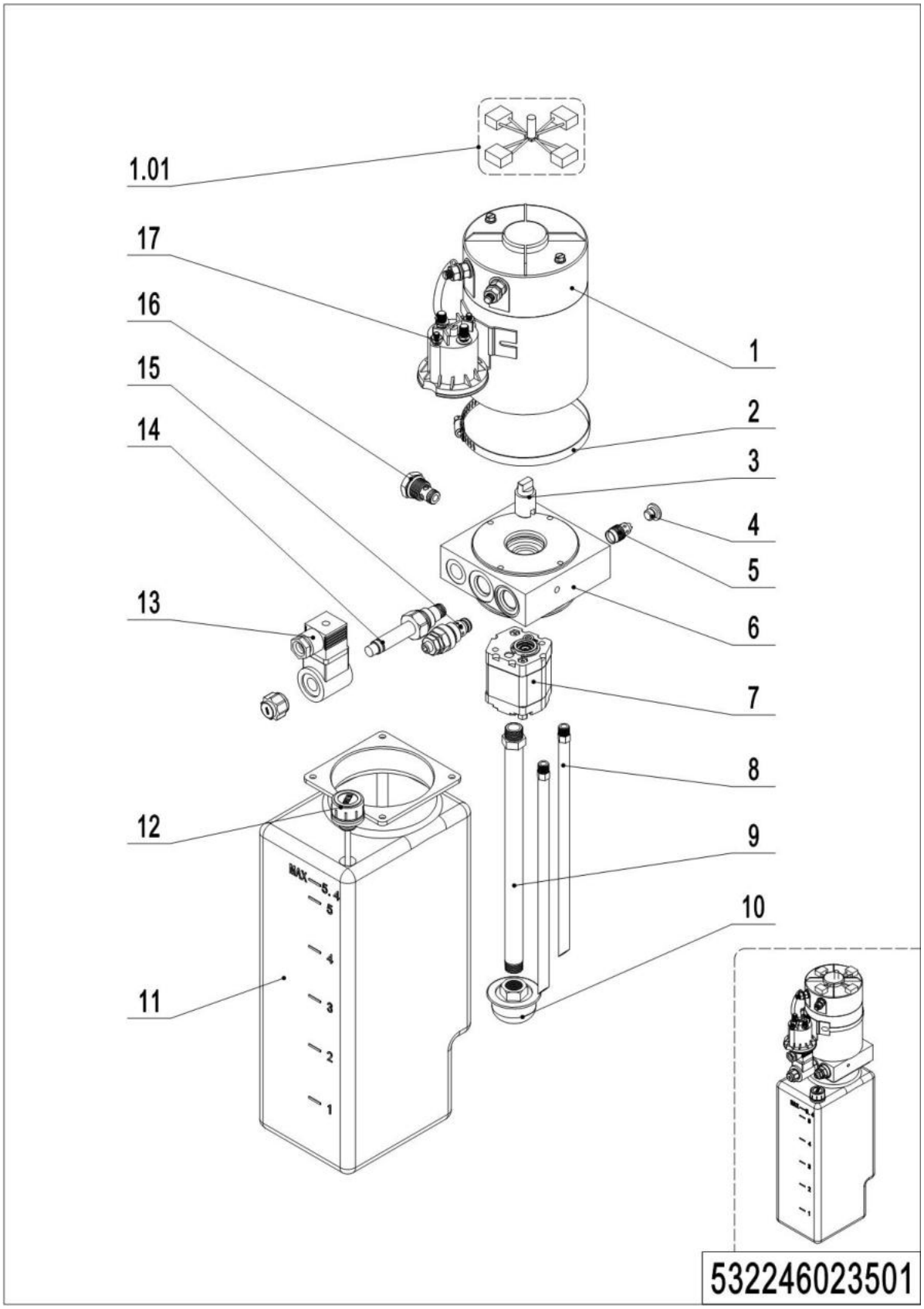

02 Pump unit （532246023501）

No.	Item Code	Mark	Item Description	Qty.	Substitute	Note
--	950900100069		Pump Unit	1		
1	532298510037		Motor	1		
1.01	532298510026		Carbon Brush	1		
2	532298510040		Hose Clamp	1		
3	532298520007		Coupling	1		
4	532298520003		End Cap	1		
5	532298510027		Valve	1		
6	532298520006		Valve Block	1		
7	532298510043		Gear pump	1		
8	532298520004		Pipe	2		
9	532298520005		Oil Tube	1		
10	532298510031		Filter	1		
11	532298510029		Tank	1		
12	532298510030		Cap-Tank	1		
13	532298510034		Coil	1		
14	532298510033		Magnetic Valve	1		
15	532298510044		Overflow valve	1		
16	532298510028		Check Valve	1		
17	532298510036		Switch	1		

Chapter 3: Truck structure

01 Truck frame (562346021501)

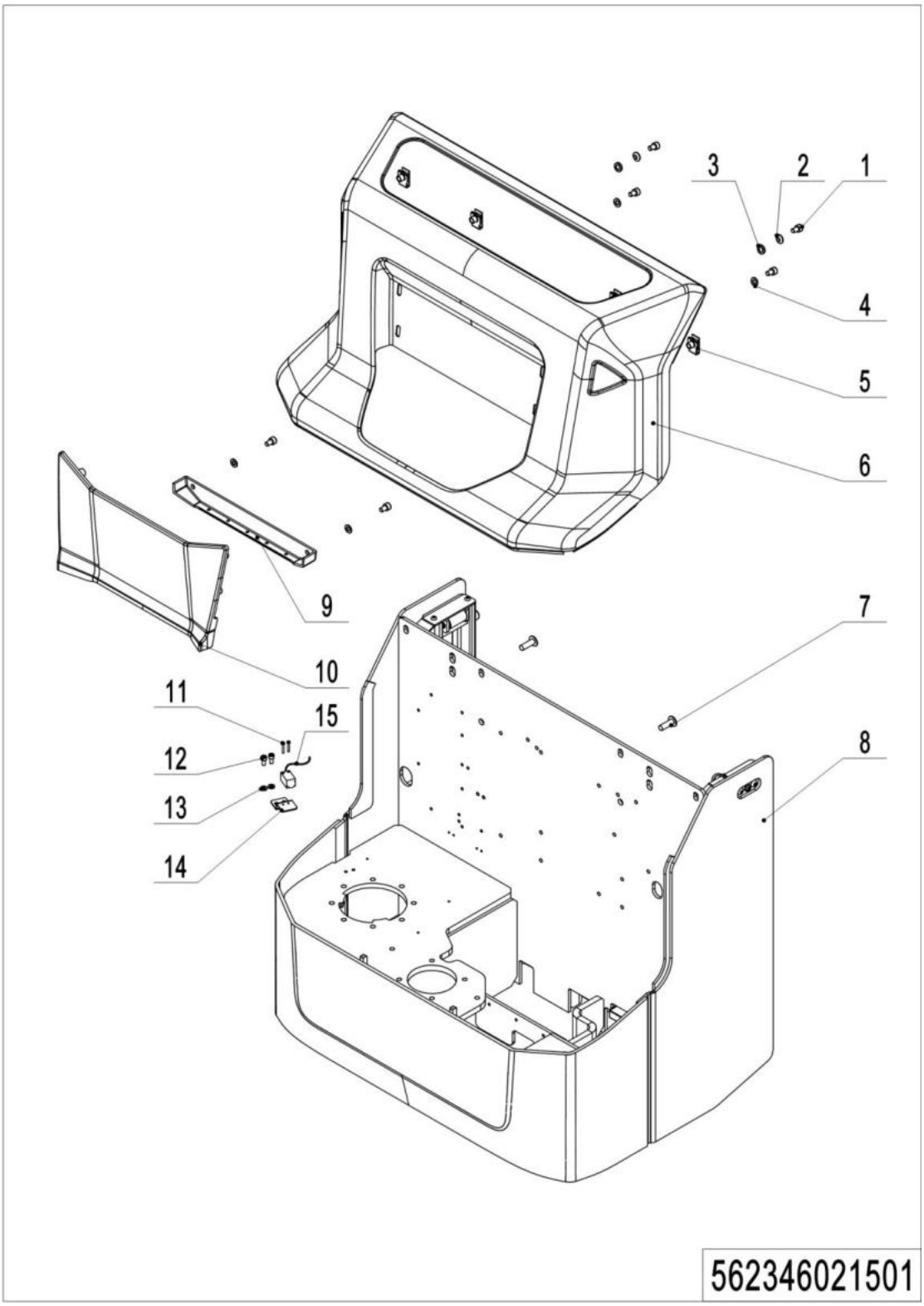

01 Truck frame (562346021501)

No.	Item Code	Mark	Item Description	Qty.	Substitute	Note
1	910200200053	1	Screw	6		
2	910400600004	1	Spherical Washer	2		
3	910400700004	1	Cone Washer	2		
4	910400100006	1	Flat Washer	4		
5	940400400003		Cage Nut	4		
6	532221510003		Cover	1		
7	941100100004	1	Screw	4		
8	562321510001	2	Chassis (570x1150)	1		570x1150
	562321511001	2	Chassis (685x1150)	1		685x1150
9	532221520025		Cover	1		
10	532221520024		Panel	1		
11	910200500015	1	Screw	2		
12	910200200033	1	Screw	2		
13	910400100005	1	Flat Washer	2		
14	532221520031		Mounting Plate	1		

02 Truck frame (562346021502)

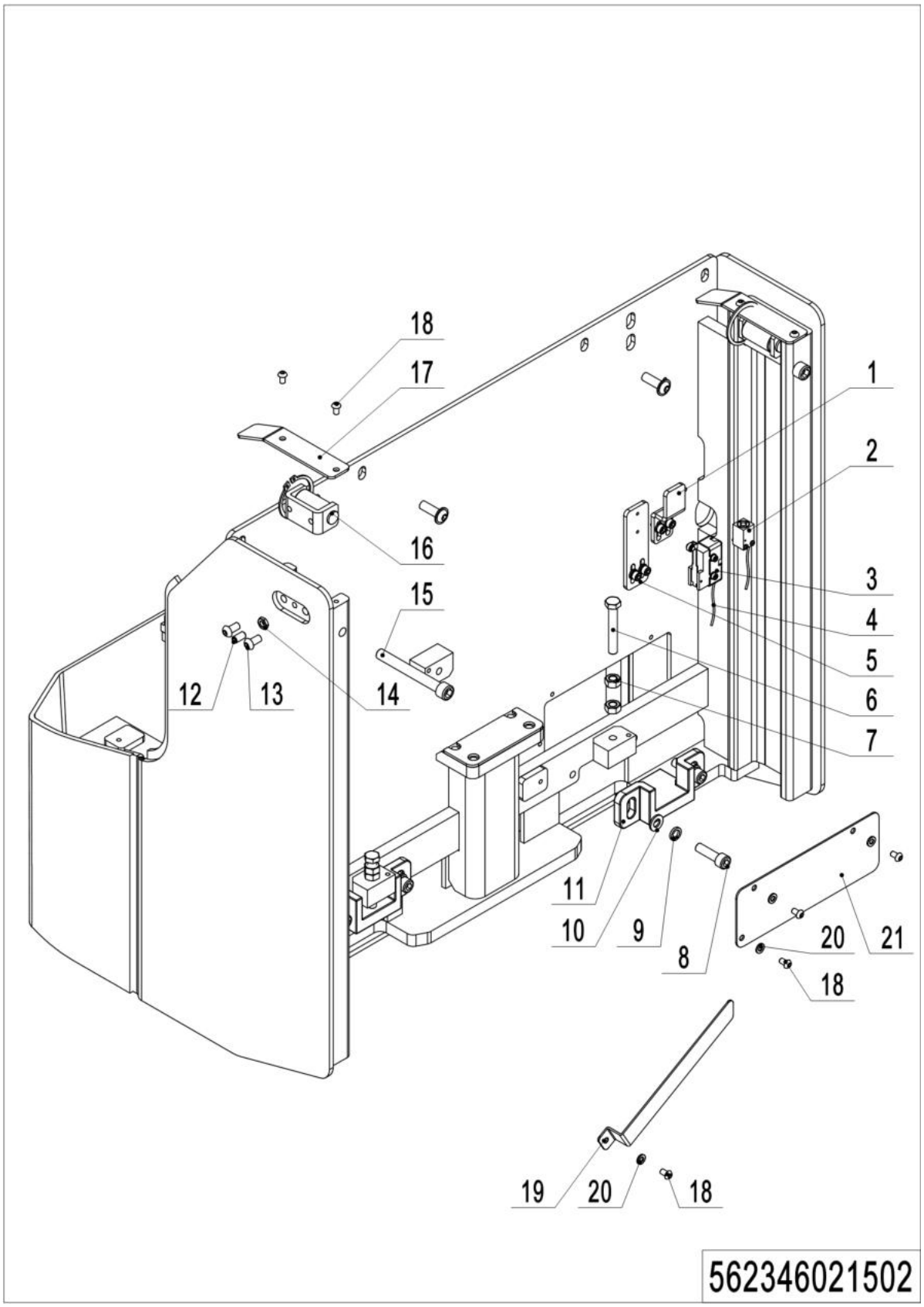

1=Supply as package; 2=Supply with limit; 3=Phasing out supply; 4=Supply as assembly; 5=Check other lists.

02 Truck frame (562346021502)

No.	Item Code	Mark	Item Description	Qty.	Substitute	Note
1	562321520003		Plate	1		
2	505633510000		Proximity Switch	1		
3	920200300003		Microswitch	1		
4	562333010004		Cable	1		
5	562321520002		Plate	1		
6	910100300044		Bolt	2		
7	910300100007		Nut	4		
8	910200200077		Screw	4		
9	910400500007		Spring Washer	4		
10	910400100007		Flat Washer	4		
11	562321520001		Jacking block	2		
12	910200800020		Screw	2		
13	910200300024		Screw	4		
14	910300300004		Nut	2		
15	910200200090		Screw	2		
16	400244010002		Roller	2		
17	562321520004		Plate	2		
18	910200300016		Screw	6		
19	562321520005		Plate	1		
20	910400100005		Flat Washer	4		
21	562321520116		Plate	1		

03 Forks (562346038001)

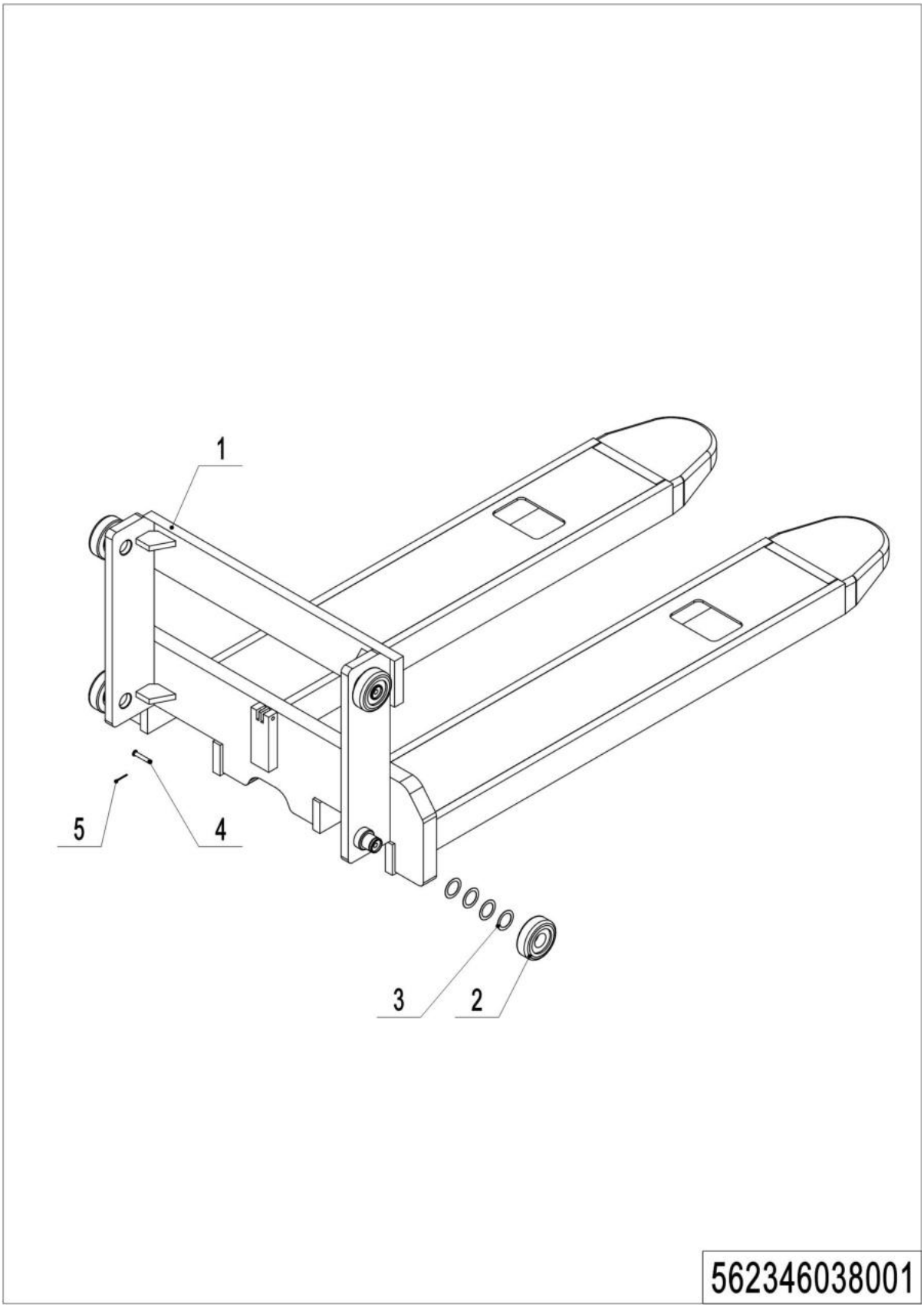

1=Supply as package; 2=Supply with limit; 3=Phasing out supply; 4=Supply as assembly; 5=Check other lists.

03 Forks (562346038001)

No.	Item Code	Mark	Item Description	Qty.	Substitute	Note
1	562338010001	2	Fork(570x1150)	1		Two-stage mast
	562338010002	2	Fork(685x1150)	1		Two-stage mast
	562338010003	2	Fork(570x1150)	1		Single mast
	562338010004	2	Fork(685x1150)	1		Single mast
2	940200100038		Main Roller	4		
3	940600500016		Washer	24		on demand
4	941100800006	1	Pin	1		
5	910600600015	1	Cotter Pin	1		

04 Battery holder (532246012501)

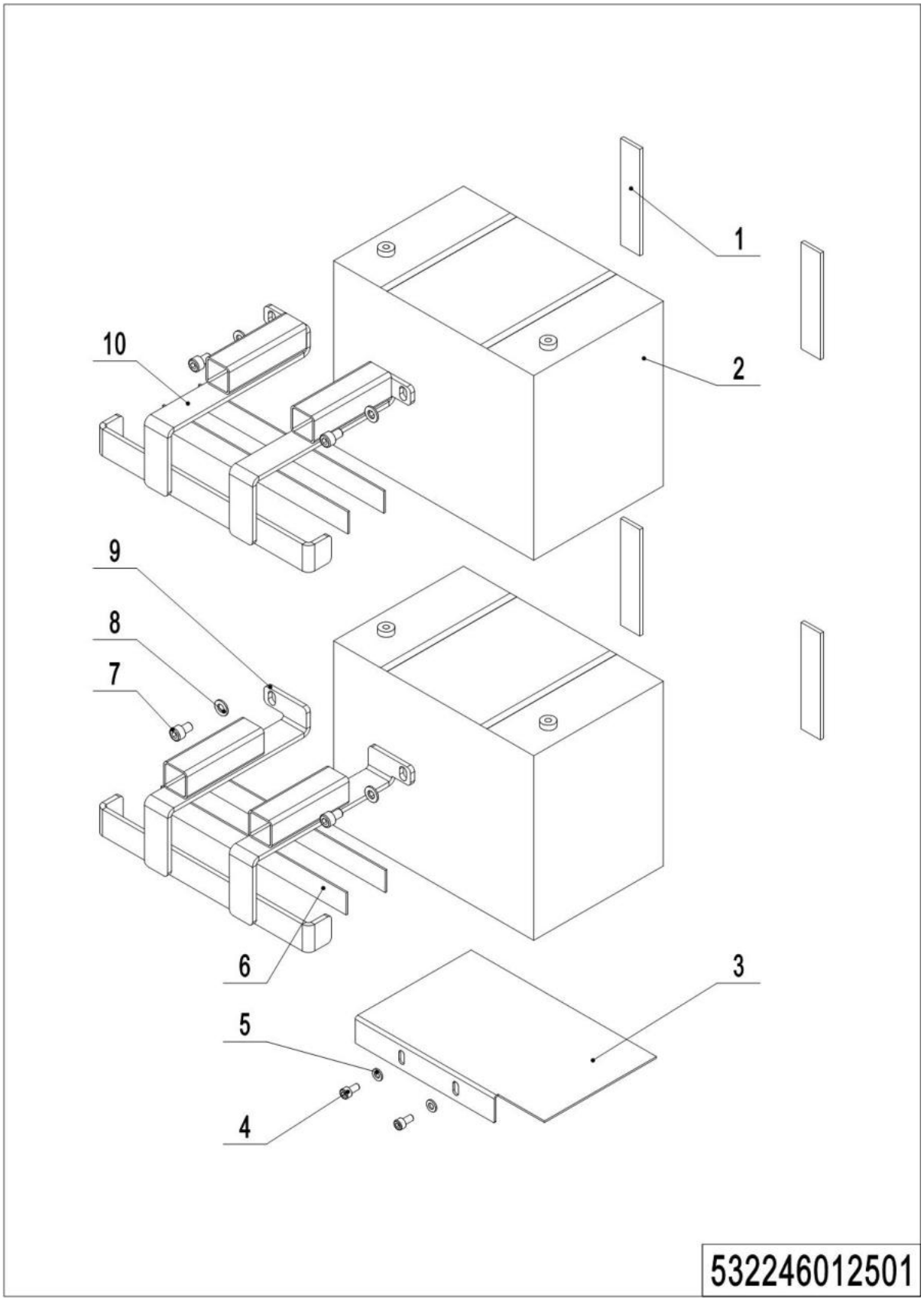

1=Supply as package; 2=Supply with limit; 3=Phasing out supply; 4=Supply as assembly; 5=Check other lists.

04 Battery holder (532246012501)

No.	Item Code	Mark	Item Description	Qty.	Substitute	Note
1	532223520010		Crash Pad	4		
2	920600100105		Battery12V85Ah	2		TN
	920600100107		Battery12V106Ah	2		TN
3	532212520006		Mounting Plate	1		
4	910200200033	1	Screw	2		
5	910400100005	1	Flat Washer	2		
6	532233020005		Crash Pad	4		85Ah
7	910200200053	1	Screw	4		
8	910400100006	1	Flat Washer	4		
9	532212510002		Mounting Plate	1		85Ah
	532212510004		Mounting Plate	1		106Ah
10	532212510001		Mounting Plate	1		85Ah
	532212510003		Mounting Plate	1		106Ah

05 Battery holder (lithium battery) (532246012502)

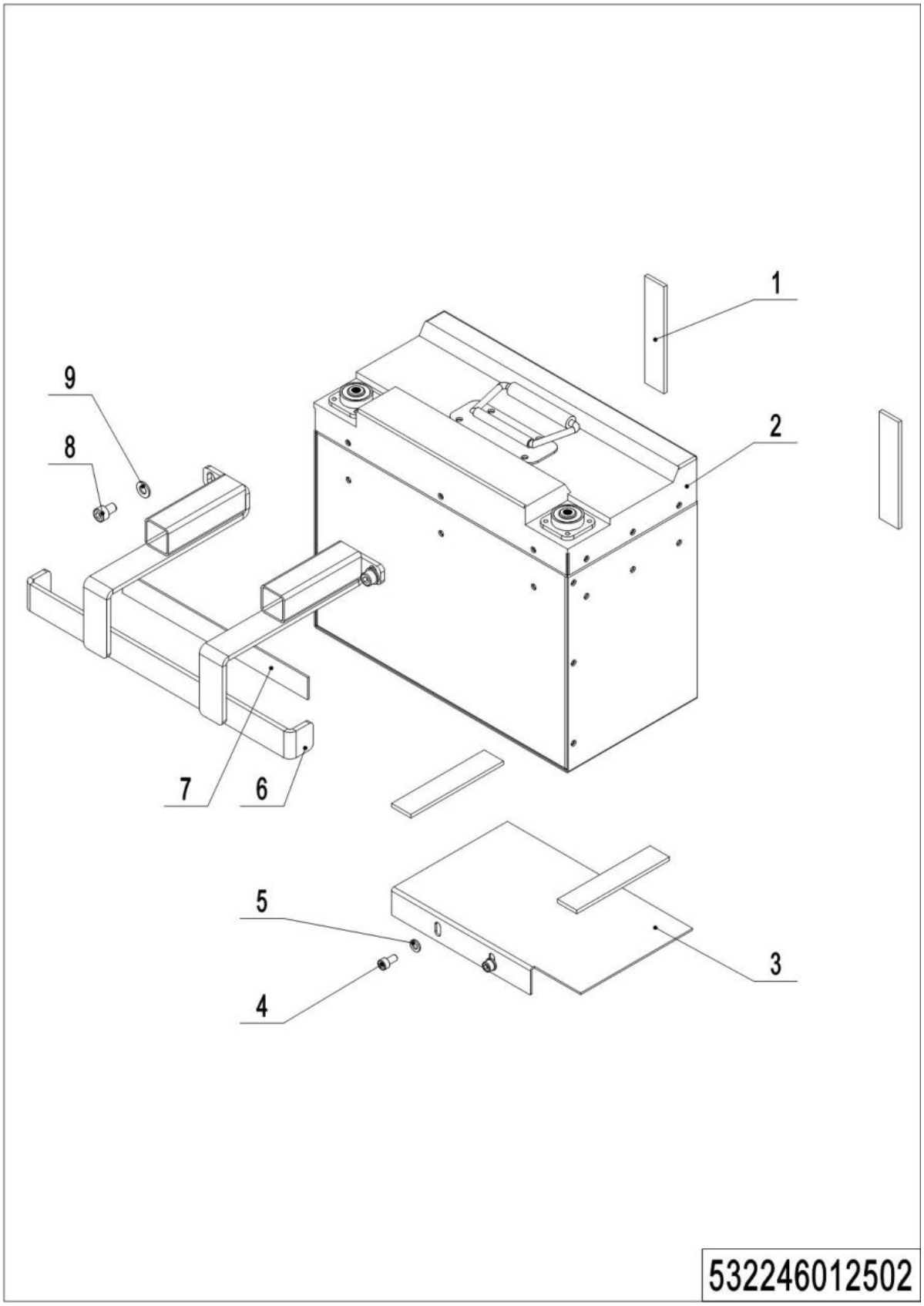

1=Supply as package; 2=Supply with limit; 3=Phasing out supply; 4=Supply as assembly; 5=Check other lists.

05 Battery holder (lithium battery) (532246012502)

No.	Item Code	Mark	Item Description	Qty.	Substitute	Note
1	532223520010		Crash Pad	4		
2	920600100082		Li Battery24V60Ah	1		HF
3	532212520006		Mounting Plate	1		
4	910200200033	1	Screw	2		
5	910400100005	1	Flat Washer	2		
6	532212510003		Mounting Plate	1		
7	532233020005		Crash Pad	1		
8	910200200053	1	Screw	2		
9	910400100006	1	Flat Washer	2		

06 Control panel assembly (532246010001)

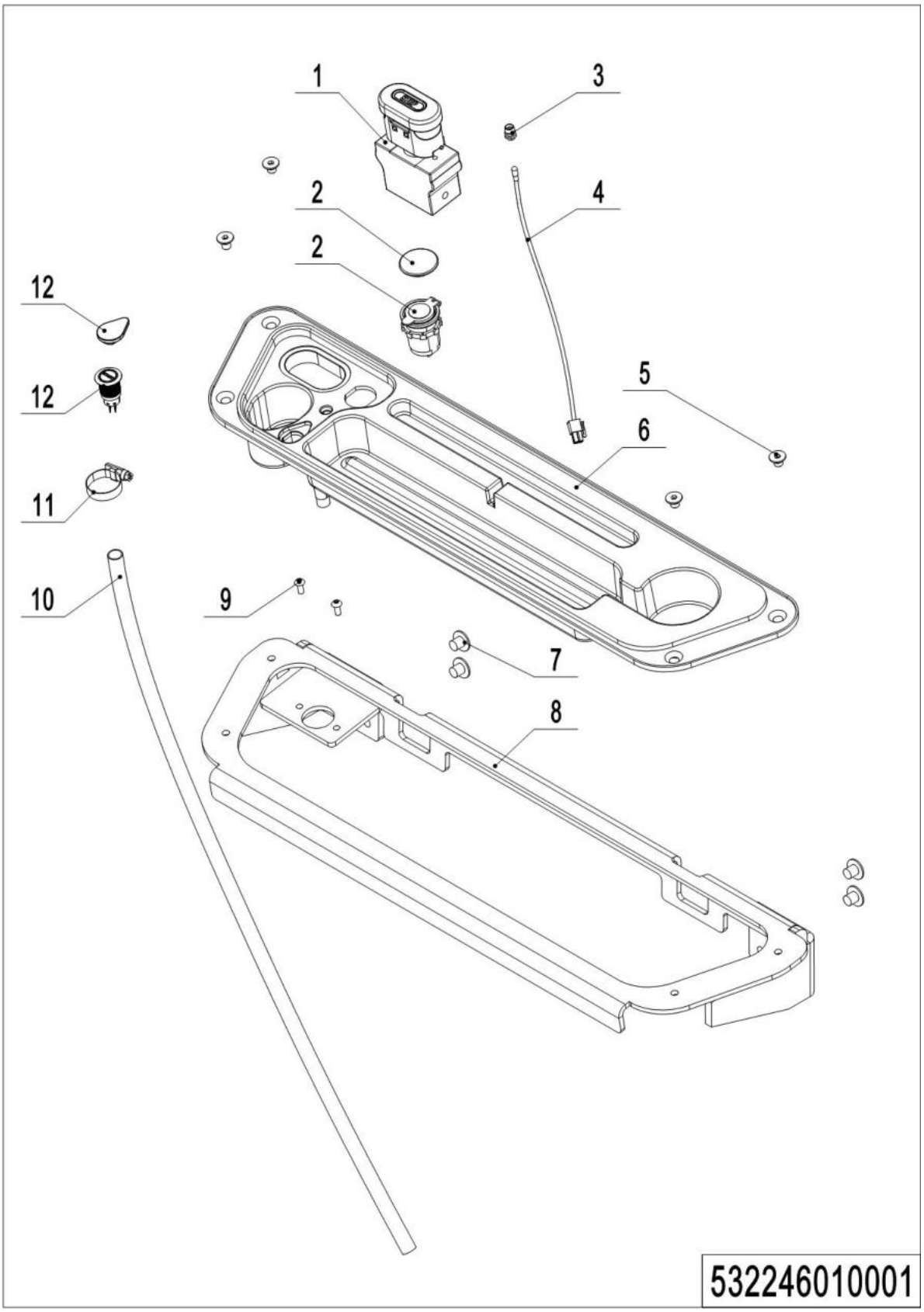

1=Supply as package; 2=Supply with limit; 3=Phasing out supply; 4=Supply as assembly; 5=Check other lists.

06 Control panel assembly (532246010001)

No.	Item Code	Mark	Item Description	Qty.	Substitute	Note
1	920200100009		Emergency Button	1		
2	532210020003		Close Plate	1		Lead-acid battery
	206033010036		USB interface	1		Lithium battery
3	922000100024		Lamp Holder	1		
4	532298510006		Indicator Light	1		
5	910200400023	1	Screw	4		
6	532210020001		Bezel	1		
7	941100100005		Screw	4		
8	532210010001		Mounting Plate	1		
9	910200300012	1	Screw	2		
10	532210020008		Pipe	1		
11	911000600008		Hose Clamp	1		
12	532210020002		Close Plate	1		Lead-acid battery
	532233010023		Button	1		Lithium battery

Chapter 4: Steering system, braking system and wheels

01 Tiller (562346011001)

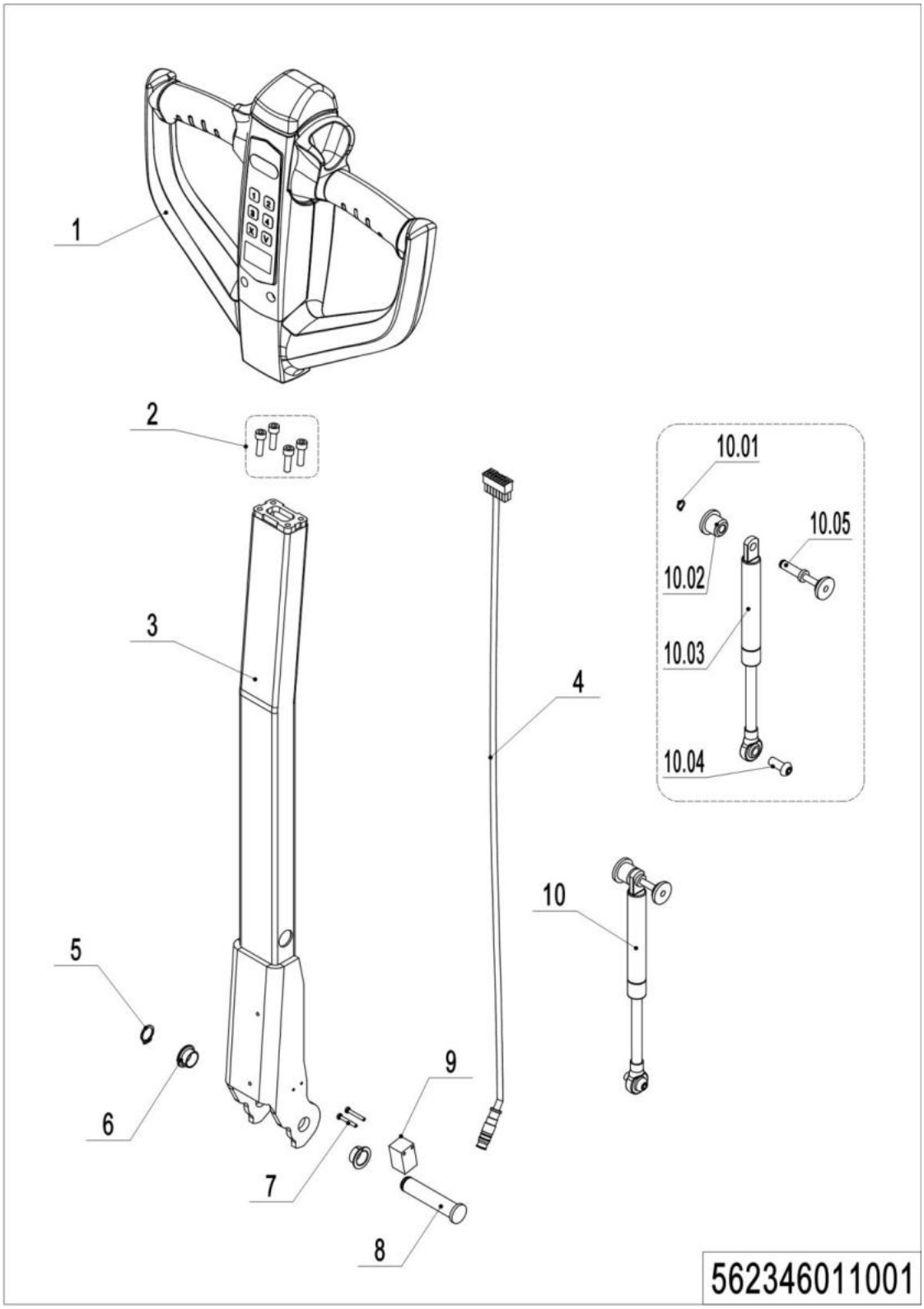

01 Tiller （562346011001）

No.	Item Code	Mark	Item Description	Qty.	Substitute	Note
1	562311010001		Tiller	1		
	562311010002		Tiller	1		IC card
2	910200200036	1	Screw	4		
3	532211010000		Tiller	1		
4	532233010019		Wire Harness	1		
5	910401300006		Circlip	1		
6	940500200001		Bushing	2		
7	941101100001	1	Screw	2		
8	508011020004		Pin	1		
9	505633510001		Proximity Switch	1		
10	532298510039		Air spring kits	1		
10.1	910401300001		Circlip	1		
10.2	508011020005		Fixing Base	1		
10.3	532211020003		Gas Spring	1		
10.4	941100100011	1	Screw	1		
10.5	508011010002		Pin	1		

02 Tiller head (562346011002)

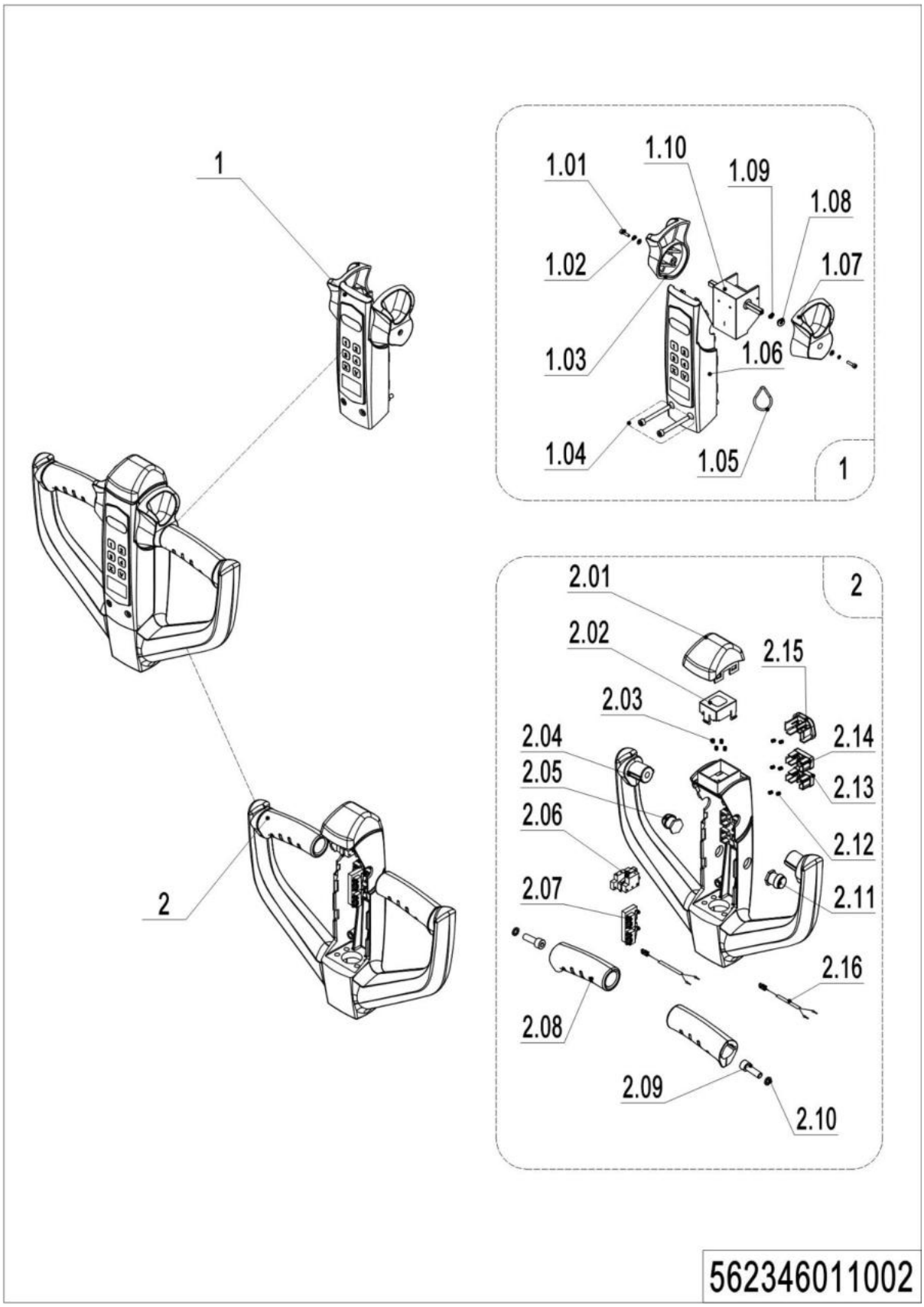

02 Tiller head （562346011002）

No.	Item Code	Mark	Item Description	Qty.	Substitute	Note
1	532298510022		Handle Cap Kit	1		
	532298510023		Handle Cap Kit	1		IC card
1.01	910200200003	1	Screw	2		
1.02	910400500002	1	Spring Washer	2		
1.03	508098520014		Traction lever	1		
1.04	910200200159	1	Screw	2		
1.05	508098520027		ID Card	1		With RFID card function
1.06	532298510054		Display Screen kit	1		
	532298510055		Display Screen kit	1		IC card
1.07	508098520020		Traction lever	1		
1.08	508098520015		Bushing	2		
1.09	508098520016		Bushing	2		
1.10	532298510005		Accelerator	1		
	532298510007		Accelerator	1		IC card
2	562398510002		Handle Cap Kit	1		
2.01	508098520018		Cap,Break Switch	1		
2.02	508098520019		Bracket	1		
2.03	502311020018		Spring	4		
2.04	562398520002		Handle Cap	1		
2.05	920200700021		Switch	1		
2.06	508098510029		Microswitch Kits	1		
2.07	508098510030		Microswitch Kits	1		
2.08	508098520013		Handle	2		
2.09	910200200058	1	Screw	2		
2.10	910400500006	1	Spring Washer	2		
2.11	920200700022		Switch	1		
2.12	502311020022		Spring	6		
2.13	508098520031		Button	1		

02 Tiller head (562346011002) continuation

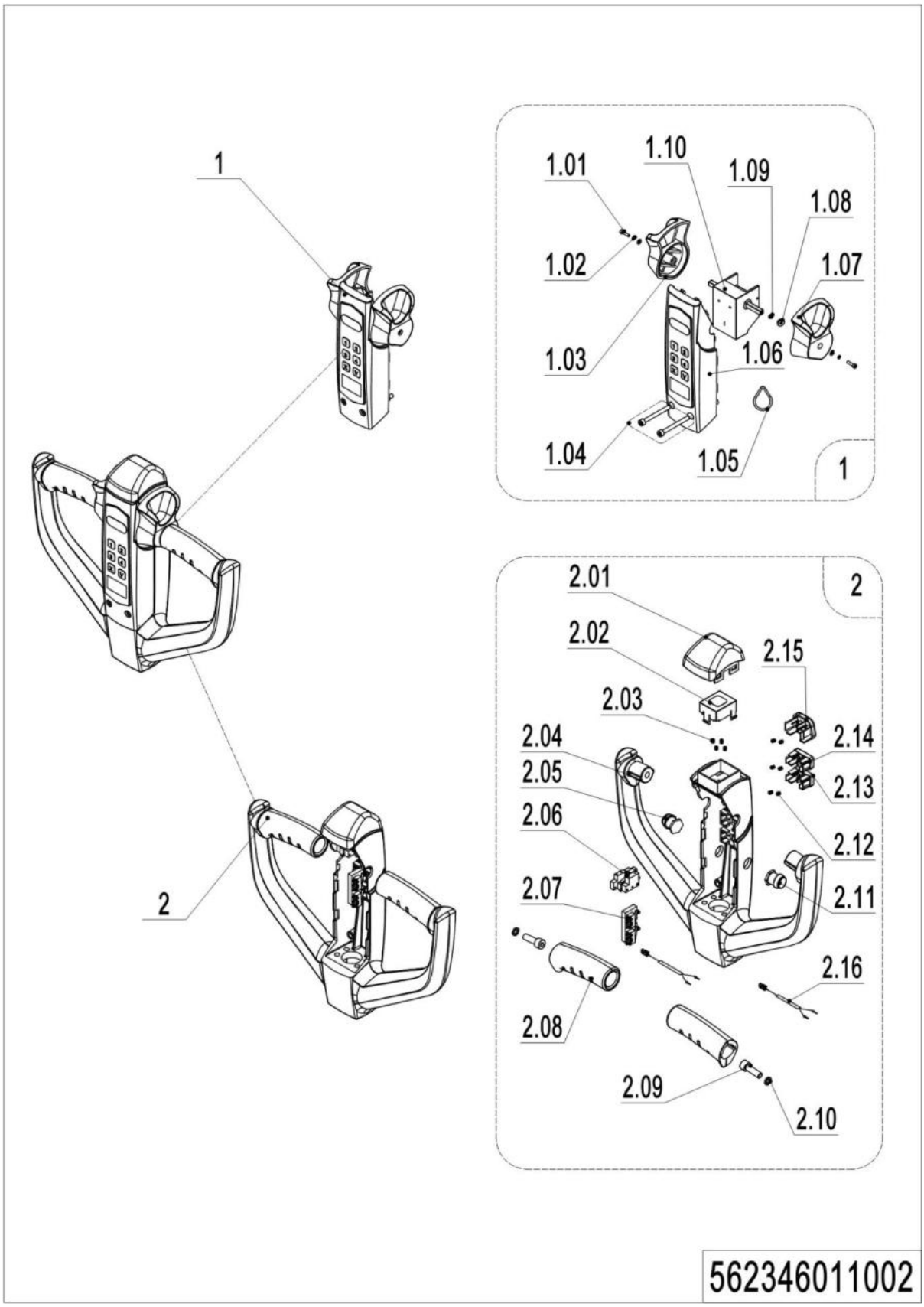

02 Tiller head (562346011002) continuation

No.	Item Code	Mark	Item Description	Qty.	Substitute	Note
2.14	508098520030		Button	1		
2.15	508098520029		Horn Button	1		
2.16	562333010005		Cable	2		

03 Load wheel (562346017001)

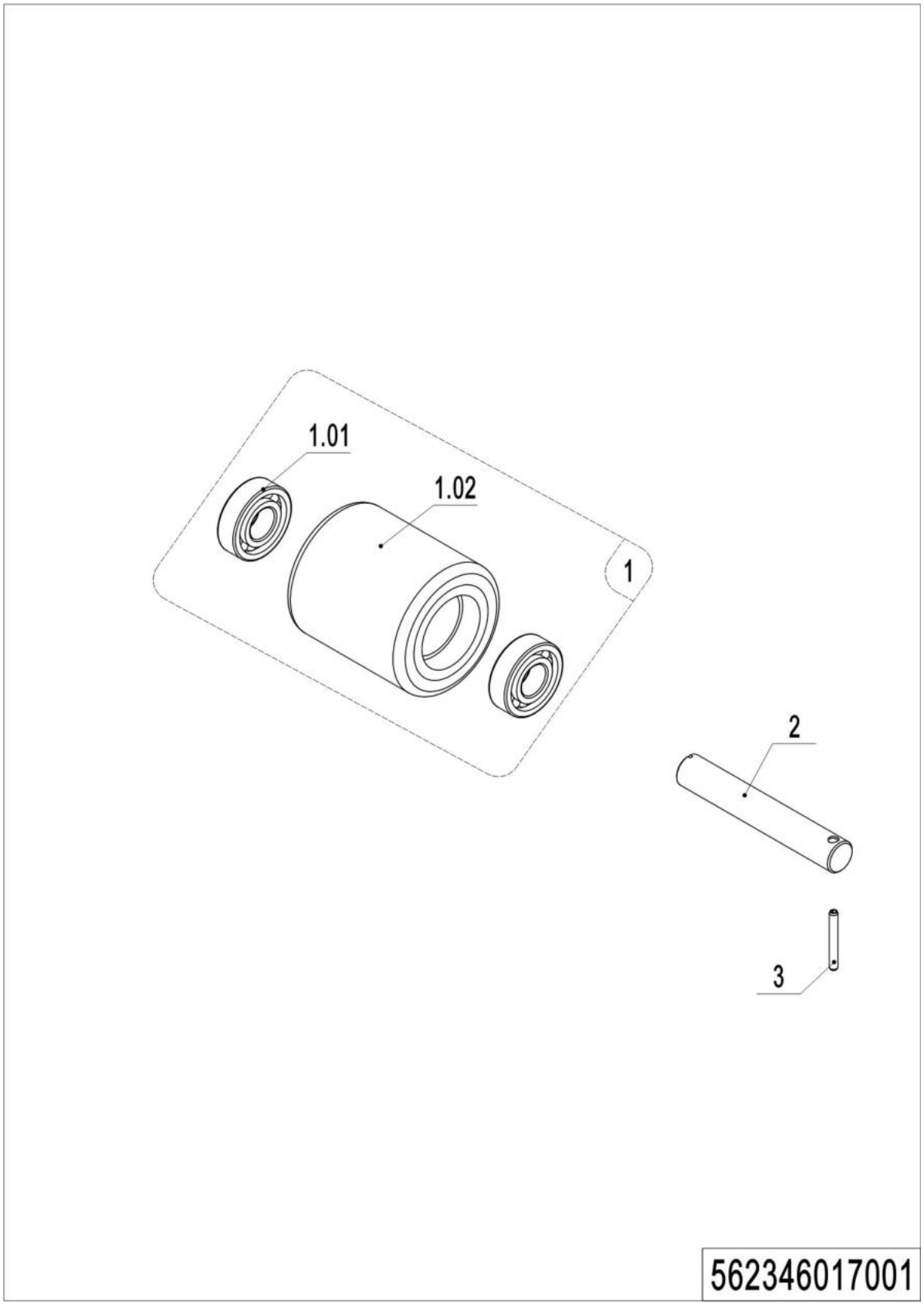

03 Load wheel (562346017001)

No.	Item Code	Mark	Item Description	Qty.	Substitute	Note
1	532298510003		Wheel	2		
1.01	910700200019		Bearing	4		
1.02	940300300011		WheelΦ84x93	2		
2	532217020001		Axle	2		
3	910600400019		Spring Pin	2		

04 Side wheel (532246016501)

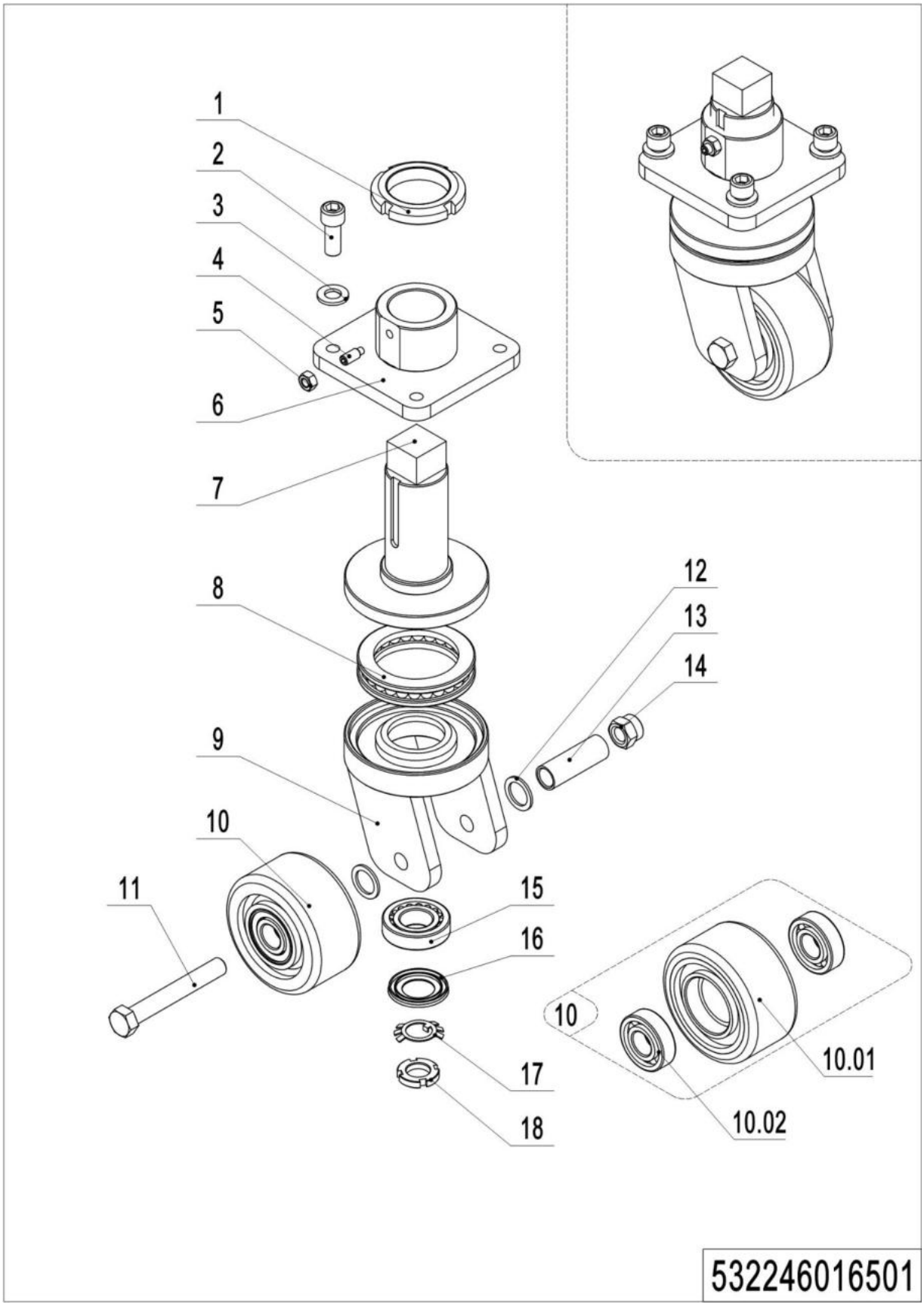

1=Supply as package; 2=Supply with limit; 3=Phasing out supply; 4=Supply as assembly; 5=Check other lists.

04 Side wheel (532246016501)

No.	Item Code	Mark	Item Description	Qty.	Substitute	Note
--	532298510041		Caster Assembly	1		
1	941100900004	1	Nut	1		
2	910200200098	1	Screw	4		
3	910400100008	1	Flat Washer	4		
4	910201000012	1	Screw	1		
5	910300100006	1	Nut	1		
6	532216510003	2	Fixing Base	1		
7	532216510002	2	Axle	1		
8	910700700011		Bearing	1		
9	532216510001	2	Wheel Carrier	1		
10	532298510004		Caster Assembly	1		
10.01	940300300030		WheelΦ100x50	1		
10.02	910700200019		Bearing	2		
11	910100100069	1	Bolt	1		
12	940600500005	1	Washer	4		
13	532216520006		Sleeve	1		
14	910300500007	1	Nut	1		
15	910700600001		Bearing	1		
16	941101000010		Cover	1		
17	910400900002	1	Lock Washer	1		
18	910300700008	1	Nut	1		

05 Manual steering (532246031201)

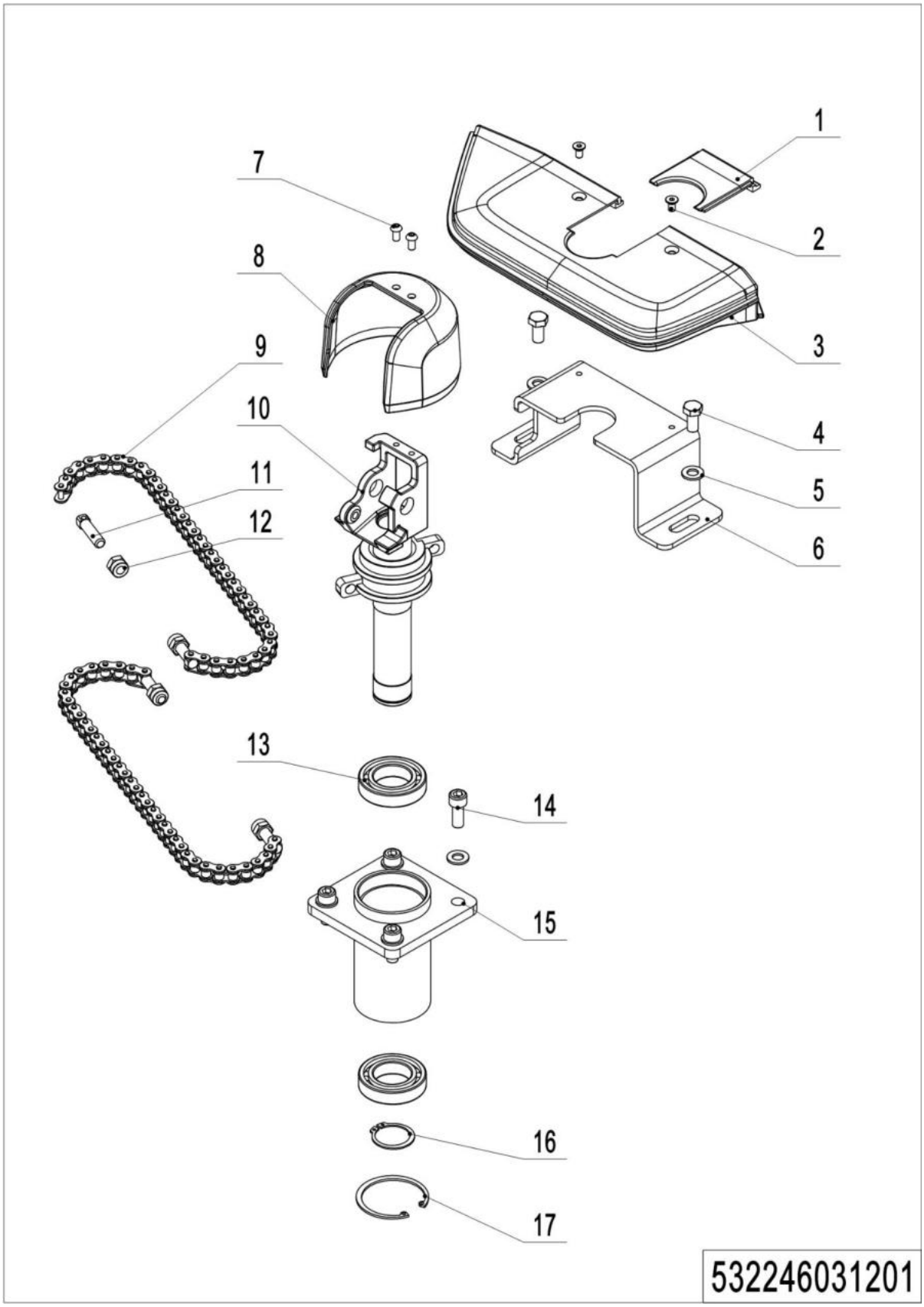

1=Supply as package; 2=Supply with limit; 3=Phasing out supply; 4=Supply as assembly; 5=Check other lists.

05 Manual steering （532246031201）

No.	Item Code	Mark	Item Description	Qty.	Substitute	Note
1	532231220011		Handle Cap	1		
2	910200400016	1	Screw	2		
3	532231220010		Handle Cap	1		
4	910100300036	1	Bolt	2		
5	910400100007	1	Flat Washer	6		
6	532231220008		Pedestal	1		
7	910200300017	1	Screw	2		
8	532211020001		Protective Cover	1		
9	532231210007		Chain	2		
10	532231210006		handle Spindle	1		
11	532231220018		Bolt			
12	910300500005		Nut			
13	910700200007		Bearing	2		
14	910200200076	1	Screw	4		
15	532231210003		Bracket	1		
16	910401300018	1	Circlip	1		
17	910401400018	1	Circlip	1		

Chapter 5: Mast system

01 Two stage mast (562346044001)

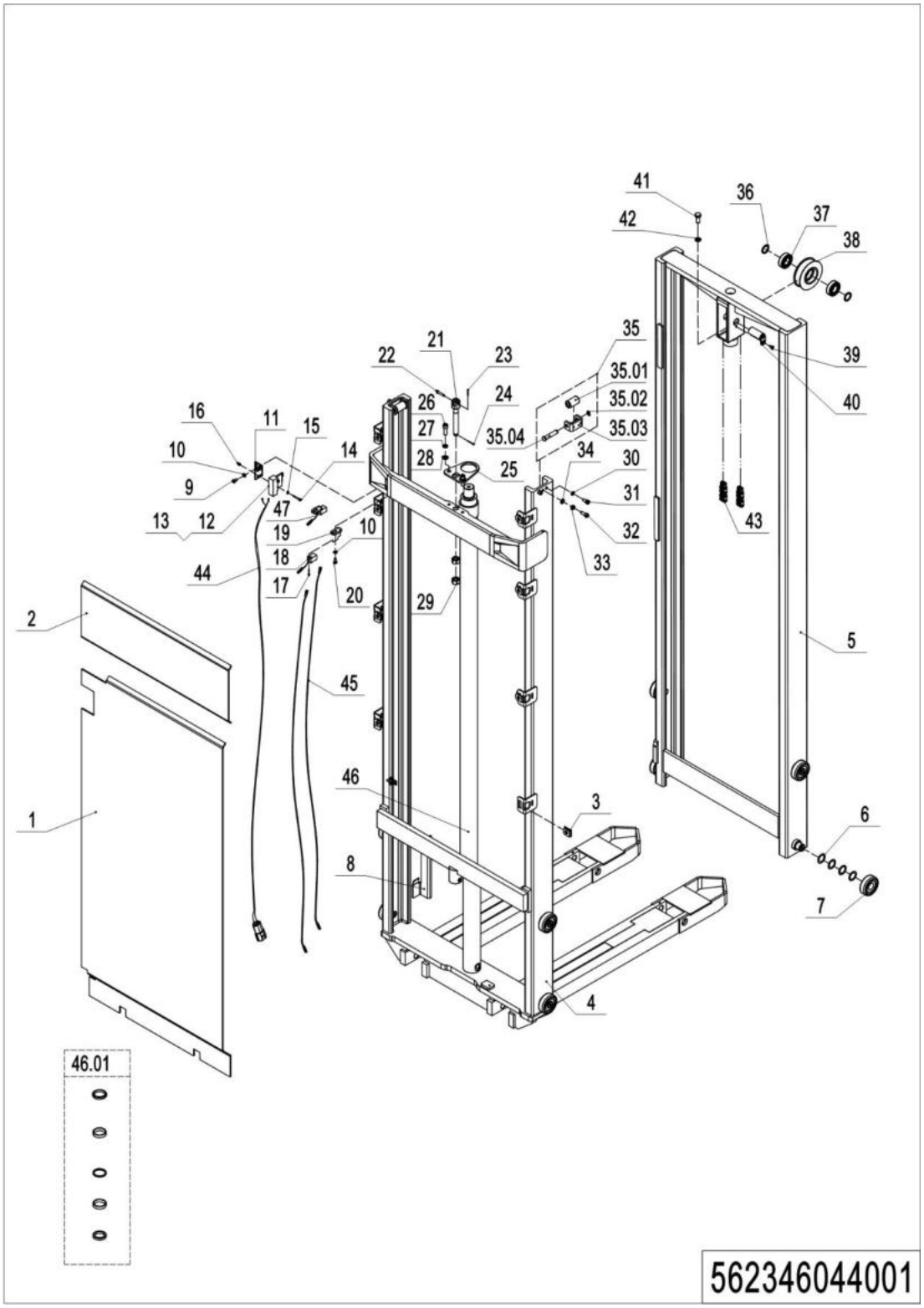

01 Two stage mast (562346044001)

No.	Item Code	Mark	Item Description	Qty.	Substitute	Note
1	562344020010		Guard Plate	1		2600
	562344020009		Guard Plate	1		2900
	562344020008		Guard Plate	1		3200
	562344020002		Guard Plate	1		3600
2	562344020003		Guard Plate	1		
3	940400300001		Spring Buckle	8		
4	562344013001	2	Outer Mast (2600,570x1150)	1		2600,570x1150
	562344013002	2	Outer Mast (2600,685x1150)	1		2600,685x1150
	562344012001	2	Outer Mast (2900,570x1150)	1		2900,570x1150
	562344012002	2	Outer Mast (2900,685x1150)	1		2900,685x1150
	562344011001	2	Outer Mast (3200,570x1150)	1		3200,570x1150
	562344011002	2	Outer Mast (3200,685x1150)	1		3200,685x1150
	562344010001	2	Outer Mast (3600,570x1150)	1		3600,570x1150
	562344010002	2	Outer Mast (3600,685x1150)	1		3600,685x1150
5	562344013003	2	Inner Mast (2600)	1		2600
	562344012005	2	Inner Mast (2900)	1		2900
	562344011005	2	Inner Mast (3200)	1		3200
	562344010005	2	Inner Mast (3600)	1		3600
6	940600500016		Washer	48		
7	940200100038		Main Roller	8		
8	562344020005		Plate	1		
9	910200200032	1	Screw	2		
10	910400100005	1	Flat Washer	6		
11	562344020007		Plate	1		
12	920200300003		Microswitch	1		
13	920200300007		Protective Cover	1		
14	910200500028	1	Screw	2		
15	910400100003	1	Flat Washer	2		

01 Two stage mast (562346044001) continuation

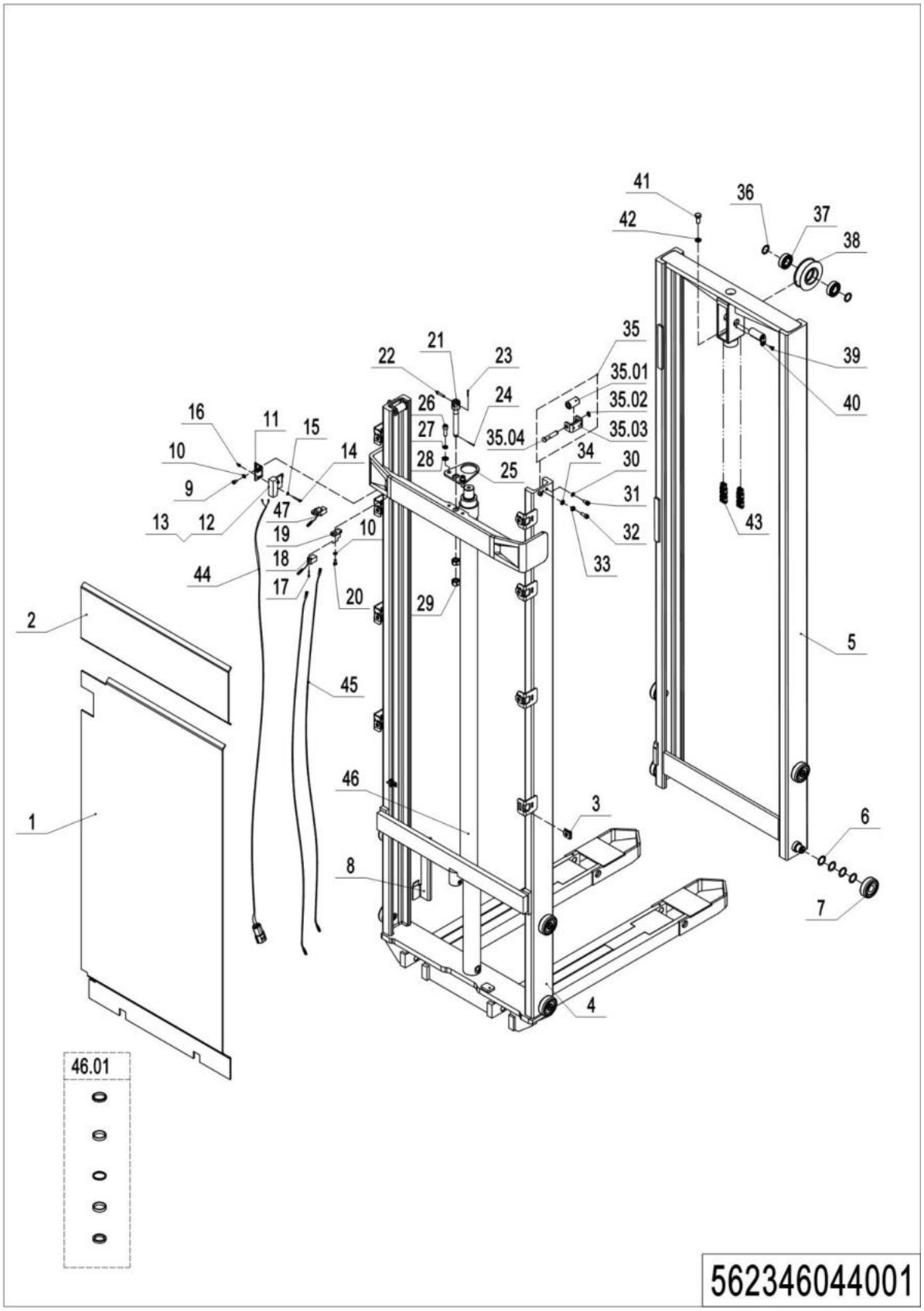

01 Two stage mast (562346044001) continuation

No.	Item Code	Mark	Item Description	Qty.	Substitute	Note
16	910300500001	1	Nut	2		
17	910200500015	1	Screw	4		
18	920200400030		Proximity Switch	1		
19	562344020004		Plate	2		
20	910200200033	1	Screw	2		
21	206044520060		Chain Anchor	1		
22	941100800010	1	Pin	1		
23	910600600006	1	Cotter Pin	1		
24	910600600019	1	Cotter Pin	1		
25	532244020027		Fixing Plate	1		
26	910200200077	1	Screw	2		
27	910400500007	1	Spring Washer	2		
28	910400100007	1	Flat Washer	2		
29	910300200008		Nut	2		
30	910400500006	1	Spring Washer	4		
31	910200200055	1	Screw	4		
32	910200200057	1	Screw	2		
33	910300100006	1	Nut	2		
34	910400100006	1	Flat Washer	2		
35	400244010002		Roller	2		
35.01	401744020000		Roller	2		
35.02	910401300003	1	Circlip	2		
35.03	532021520075		Wheel Mount	2		
35.04	401744020001		Pin	2		
36	940600500006		Washer	2		
37	910700200020		Bearing	2		
38	940200400002		Sprocket	1		
39	910200400016	1	Screw	1		
40	533243510005		Pin	1		

01 Two stage mast (562346044001) continuation

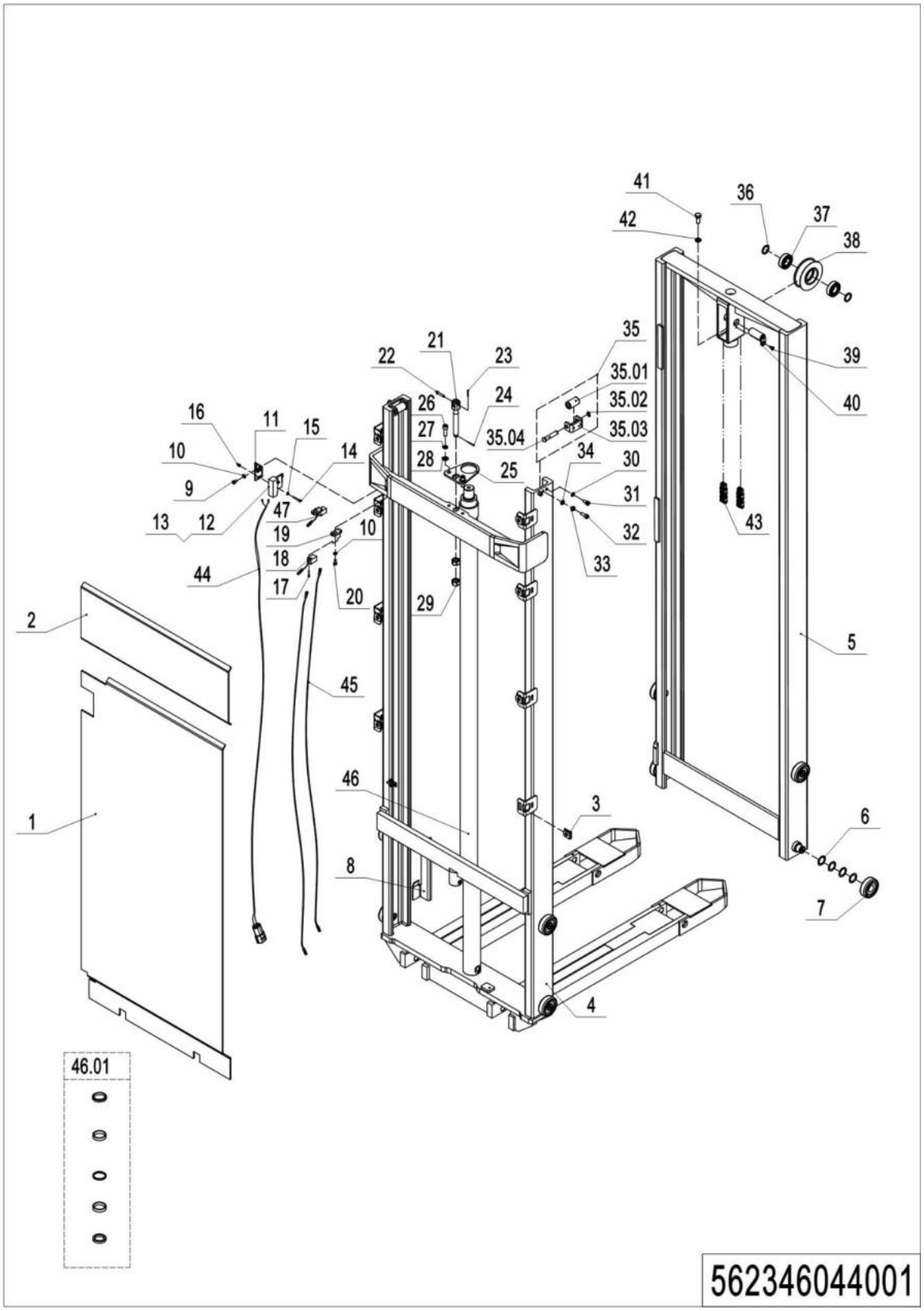

01 Two stage mast (562346044001) continuation

No.	Item Code	Mark	Item Description	Qty.	Substitute	Note
41	910100300049	1	Bolt	1		
42	910400500008	1	Spring Washer	1		
43	532244010020		Chain	1		2600
	532244010007		Chain	1		2900
	532244010014		Chain	1		3200
	206044510103		Chain	1		3600
44	532233010002		Wire Harness	1		
45	921500100077		Cable	2		
46	532244010016		Cylinder	1		2600
	532244010001		Cylinder	1		2900
	532244010009		Cylinder	1		3200
	532244010004		Cylinder	1		3600
46.01	532298510002		Seal Kit	1		
47	920200400010		Proximity Switch	1		

02 Single mast (562346043001)

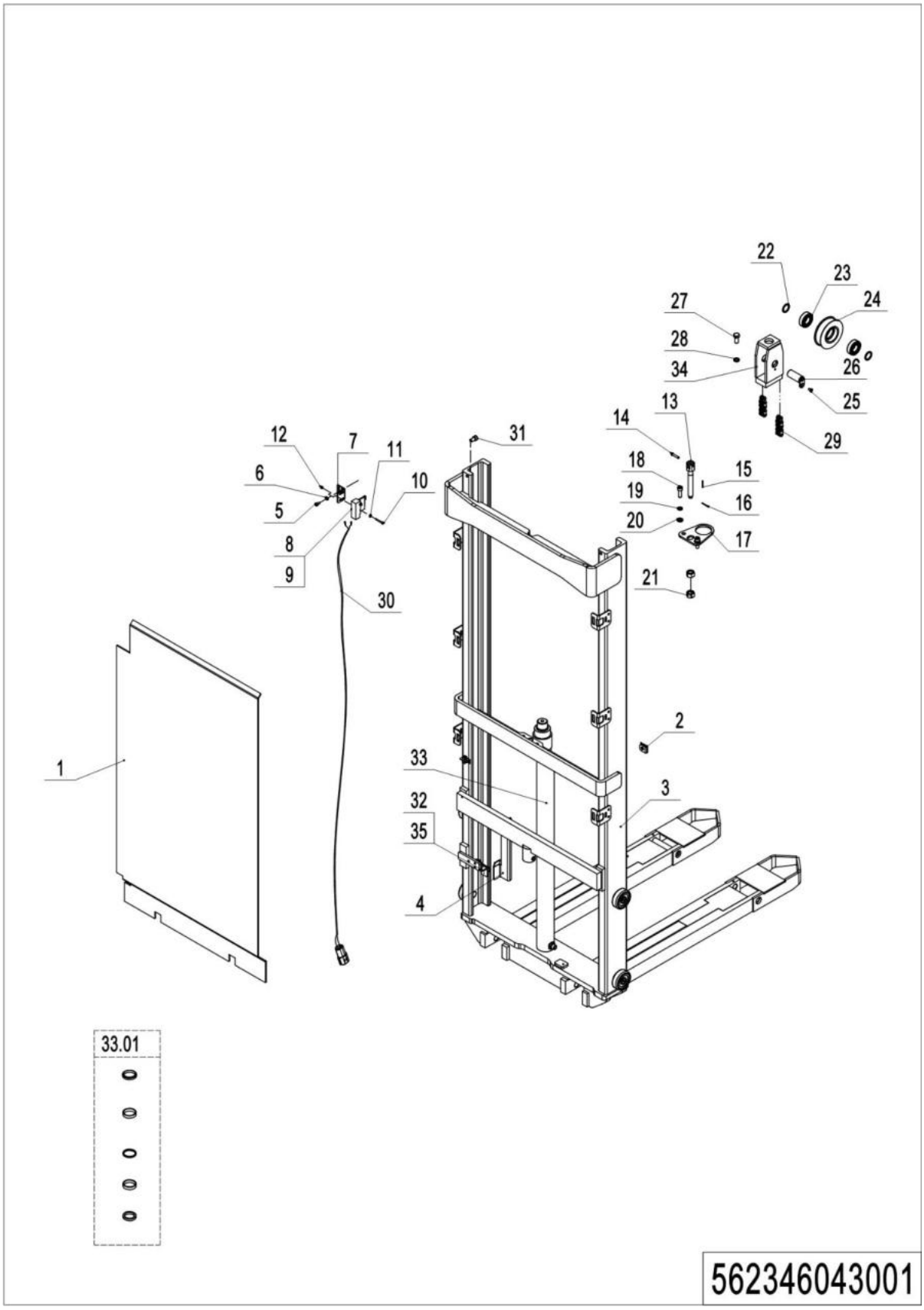

02 Single mast (562346043001)

No.	Item Code	Mark	Item Description	Qty.	Substitute	Note
1	562343020005		Guard Plate	1		1600
	562343020007		Guard Plate	1		2000
2	940400300001		Spring Buckle	8		
3	562343010001	2	Outer Mast (1600,570x1150)	1		1600,570x1150
	562343010002	2	Outer Mast (1600,685x1150)	1		1600,685x1150
	562343010003	2	Outer Mast (2000,570x1150)	1		2000,570x1150
	562343010004	2	Outer Mast (2000,685x1150)	1		2000,685x1150
4	562344020005		Plate	1		
5	910200200032	1	Screw	2		
6	910400100005	1	Flat Washer	2		
7	532244020012		Mounting Plate	1		
8	920200300003		Microswitch	1		
9	920200300007		Protective Cover	1		
10	910200500028	1	Screw	2		
11	910400100003	1	Flat Washer	2		
12	910300500001	1	Nut	2		
13	206044520060		Chain Anchor	1		
14	941100800010	1	Pin	1		
15	910600600006	1	Cotter Pin	1		
16	910600600019	1	Cotter Pin	1		
17	532243020022		Plate	1		
18	910200200077	1	Screw	2		
19	910400500007	1	Spring Washer	2		
20	910400100007	1	Flat Washer	2		
21	910300200008	1	Nut	2		
22	940600500006		Washer	2		
23	910700200020		Bearing	2		
24	940200400002		Sprocket	1		
25	910200400016	1	Screw	1		

02 Single mast (562346043001) continuation

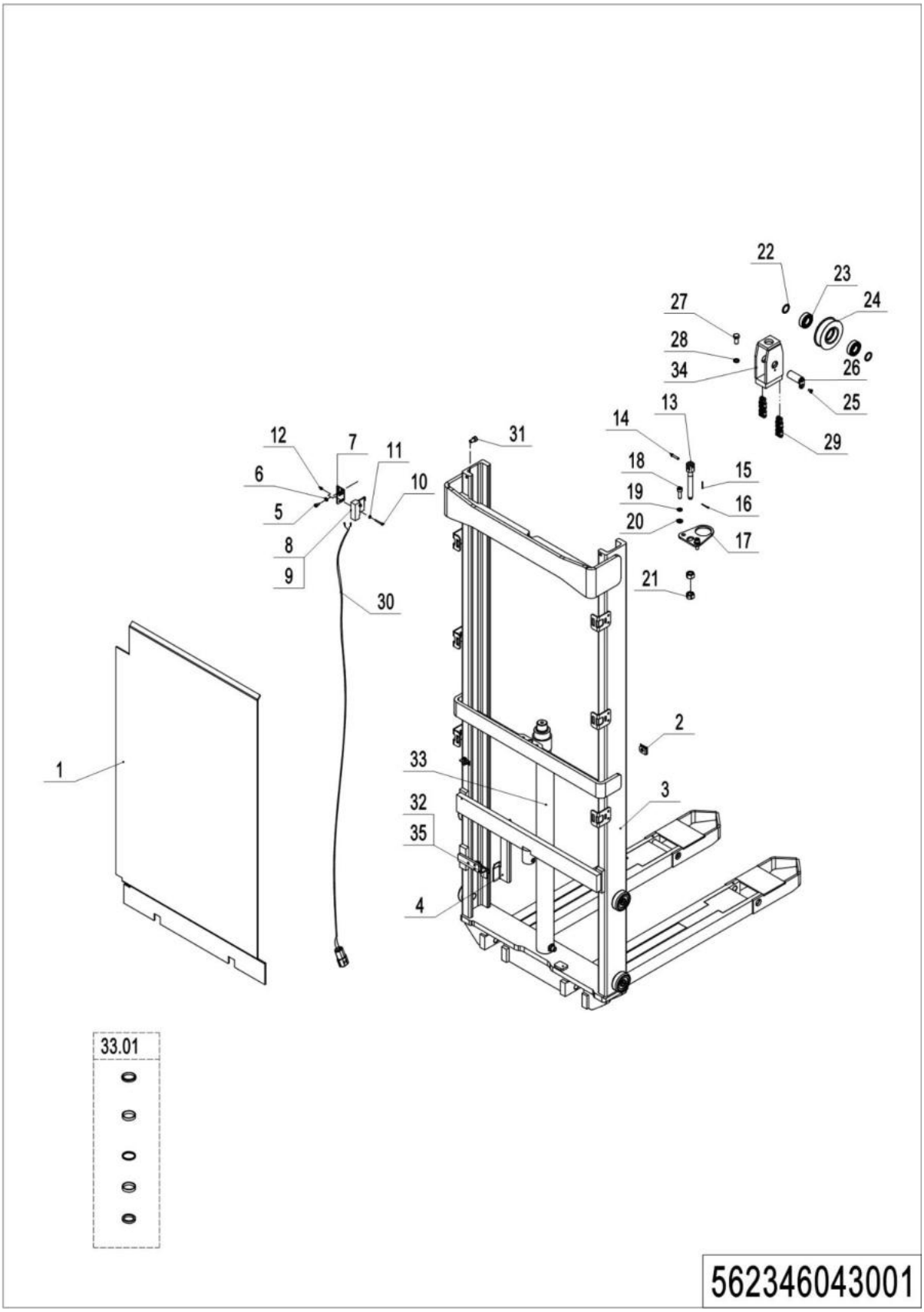

02 Single mast (562346043001) continuation

No.	Item Code	Mark	Item Description	Qty.	Substitute	Note
26	533243510005		Pin	1		
27	910100300049	1	Bolt	1		
28	910400500008	1	Spring Washer	1		
29	532344510009		Chain	1		1600
	532344510004		Chain	1		2000
30	532233010002		Wire Harness	1		
31	941100100005		Screw	2		
32	920200400030		Proximity Switch	1		
33	532243010001		Cylinder	1		1600
	532243010004		Cylinder	1		2000
33.01	532298510002		Seal Kit	1		
34	532243010002		Yoke	1		
35	562343020006		Plate	1		

03 Pull rod assembly (562346044002)

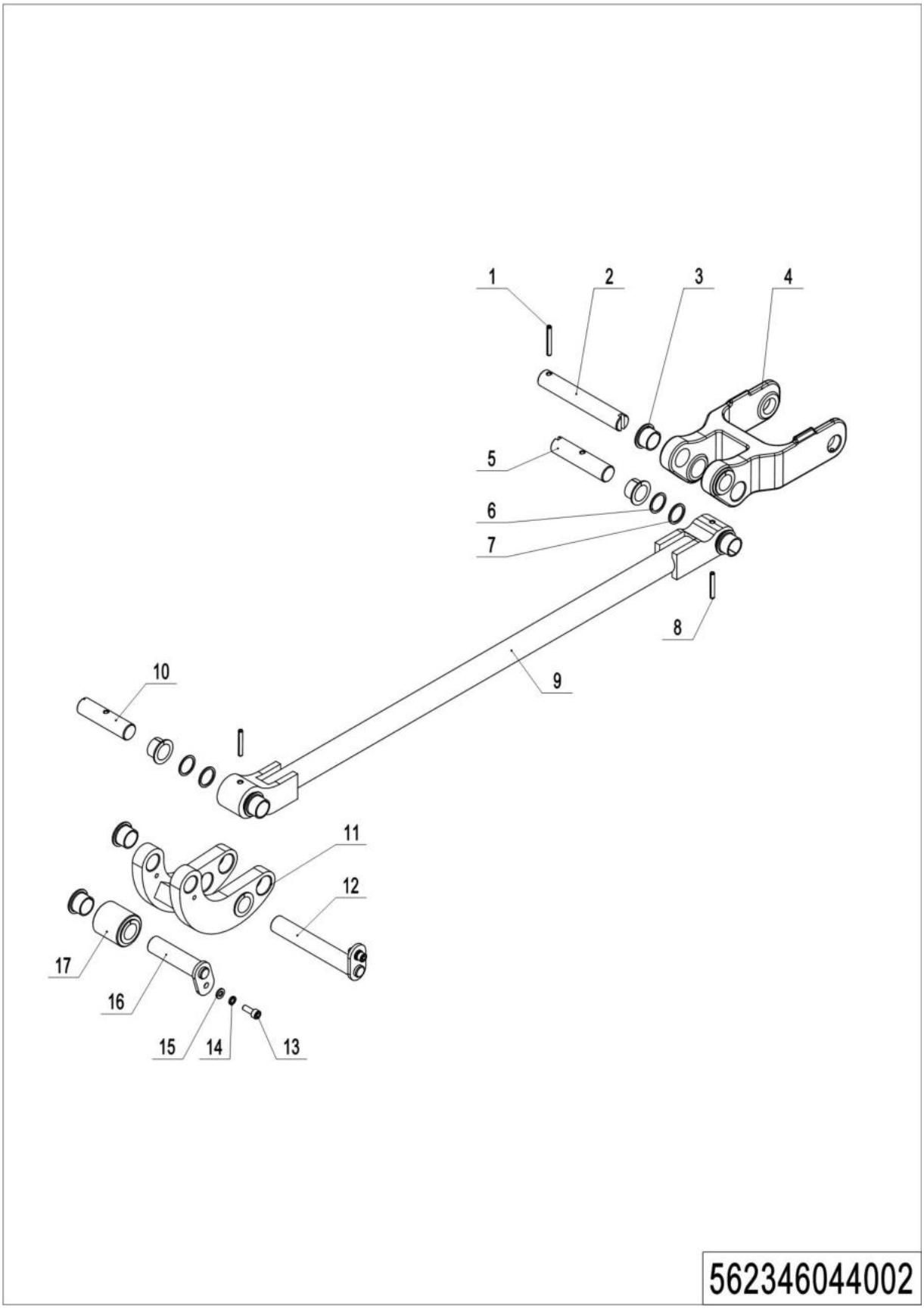

1=Supply as package; 2=Supply with limit; 3=Phasing out supply; 4=Supply as assembly; 5=Check other lists.

03 Pull rod assembly (562346044002)

No.	Item Code	Mark	Item Description	Qty.	Substitute	Note
1	910600400028		Spring Pin	2		
2	562038520025		Pin	2		
3	940500200041		Bushing	20		
4	562344020001		Frame of roller	2		
5	562038520024		Axle	2		
6	940600500013		Washer	8		
7	940600500014		Washer	8		
8	910600400027		Spring Pin	2		
9	562344010004		Pull rod welding	2		
10	562038520028		Axle	2		
11	562344010003		Linking plate welding	2		
12	562038510003		Pin	2		
13	910200200035		Screw	4		
14	910400500005		Spring Washer	4		
15	910400100005		Flat Washer	4		
16	562038510005		Pin	2		
17	562344020006		Roller	2		

Chapter 6: Electrical parts and wire harness

01 Wire harness (562346033001)

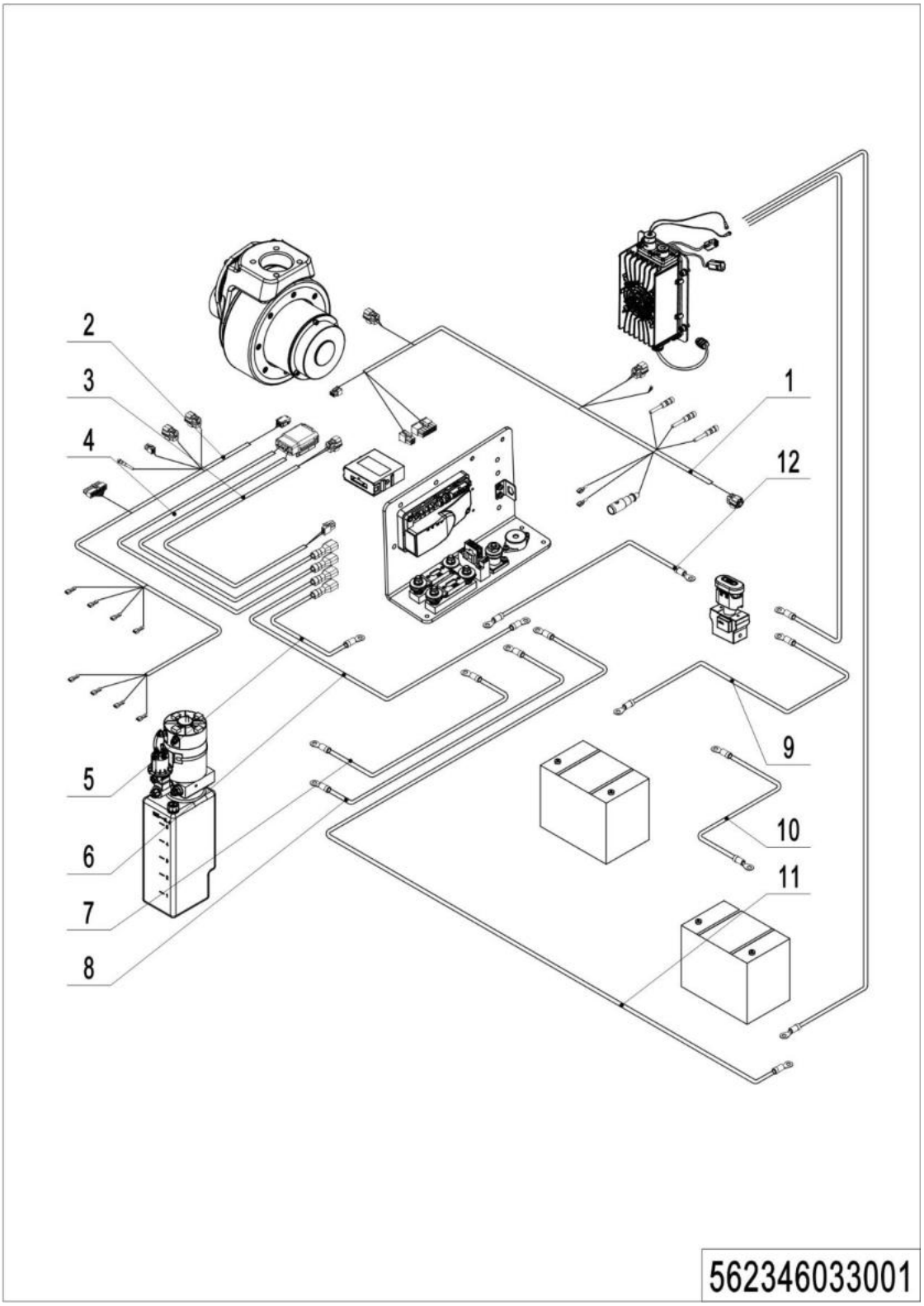

01 Wire harness (562346033001)

No.	Item Code	Mark	Item Description	Qty.	Substitute	Note
1	562333010000		Wire Harness	1		
2	562333010002		Wire Harness	1		
3	532233010003		Wire Harness	1		
4	532233010004		Wire Harness	1		
5	532233010005		Cables	1		
6	532233010006		Cables	1		
7	532233010007		Cable	1		
8	532233010009		Cable	1		
9	532233010010		Cable	1		85AH
	532233010013		Cable	1		106AH
10	532233010011		Cable	1		85AH
	532233010014		Cable	1		106AH
11	532233010012		Cable	1		85AH
	532233010015		Cable	1		106AH
12	532233010016		Cable	1		

02 Wire harness (lithium battery) (562346033002)

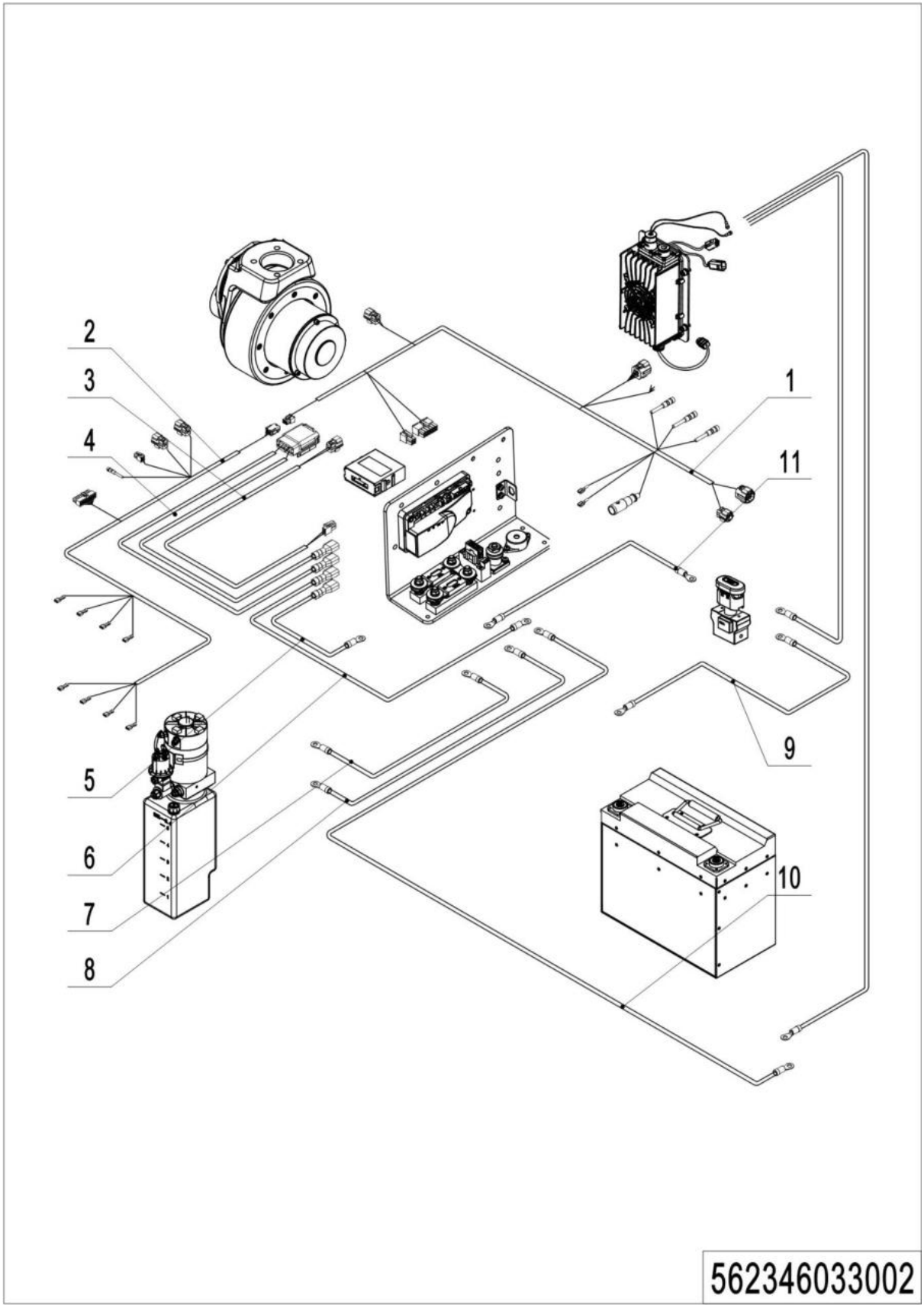

1=Supply as package; 2=Supply with limit; 3=Phasing out supply; 4=Supply as assembly; 5=Check other lists.

02 Wire harness (lithium battery) (562346033002)

No.	Item Code	Mark	Item Description	Qty.	Substitute	Note
1	562333010001		Wire Harness	1		
2	562333010002		Wire Harness	1		
3	532233010003		Wire Harness	1		
4	532233010004		Wire Harness	1		
5	532233010005		Cables	1		
6	532233010006		Cables	1		
7	532233010007		Cable	1		
8	532233010009		Cable	1		
9	532233010020		Cable	1		
10	532233010021		Cable	1		
11	532233010016		Cable	1		

03 Electrical control unit (562346033003)

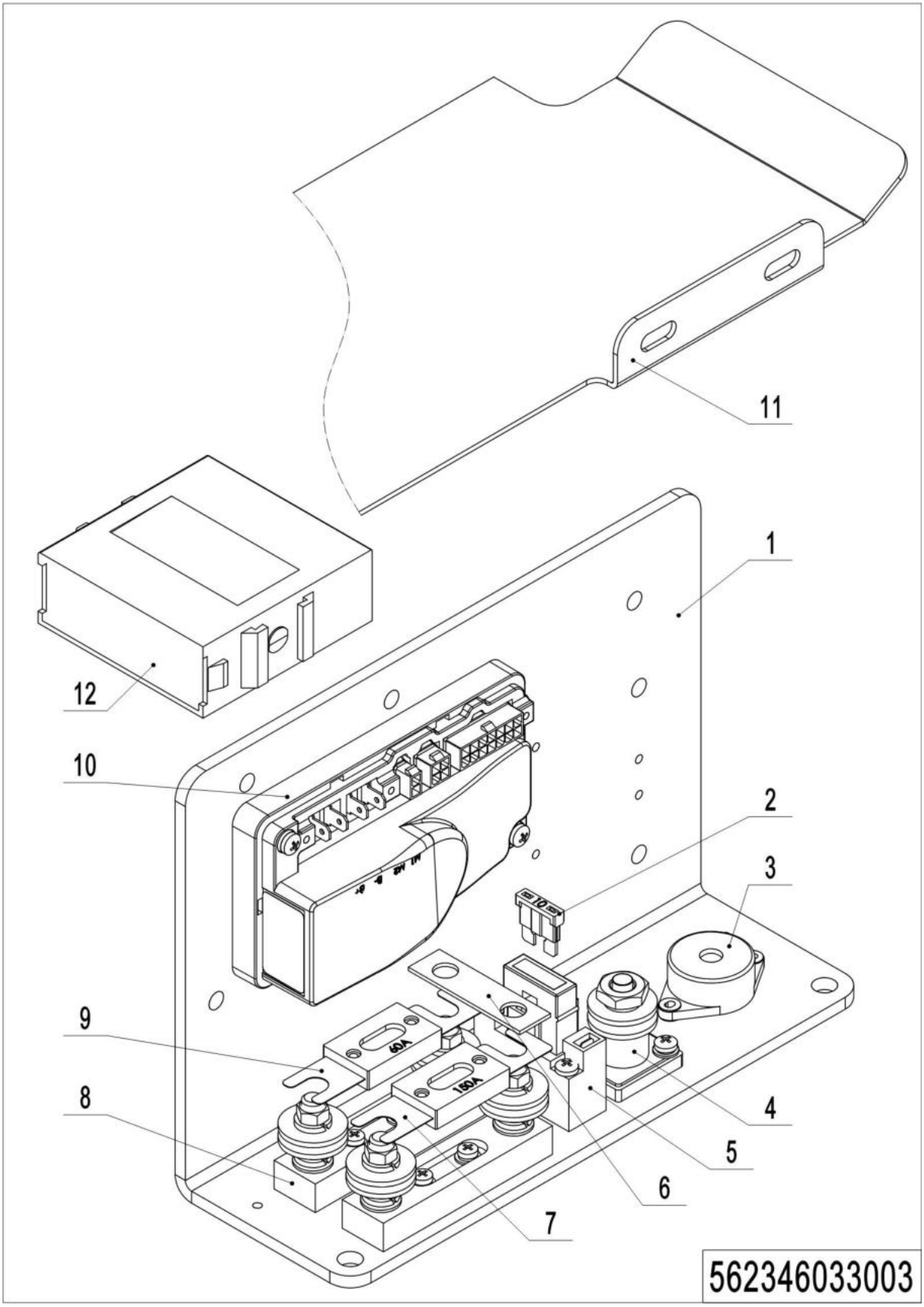

1=Supply as package; 2=Supply with limit; 3=Phasing out supply; 4=Supply as assembly; 5=Check other lists.

03 Electrical control unit (562346033003)

No.	Item Code	Mark	Item Description	Qty.	Substitute	Note
1	532233020001		Mounting Plate	1		
2	920100200002		Fuse	1		
3	920500100007		Horn	1		
4	920100400001		Fuse Holder	1		
5	920100400006		Fuse Holder	1		
6	505633020003		Copper Busbar	1		
7	920100100007		Fuse	1		
8	920100400002		Fuse Holder	2		
9	920100100003		Fuse	1		
10	921400100081		Controller	1		
11	532221520027		Baffle	1		
12	921200100016		Module CAN Communication	1		

04 Charger (532246036501)

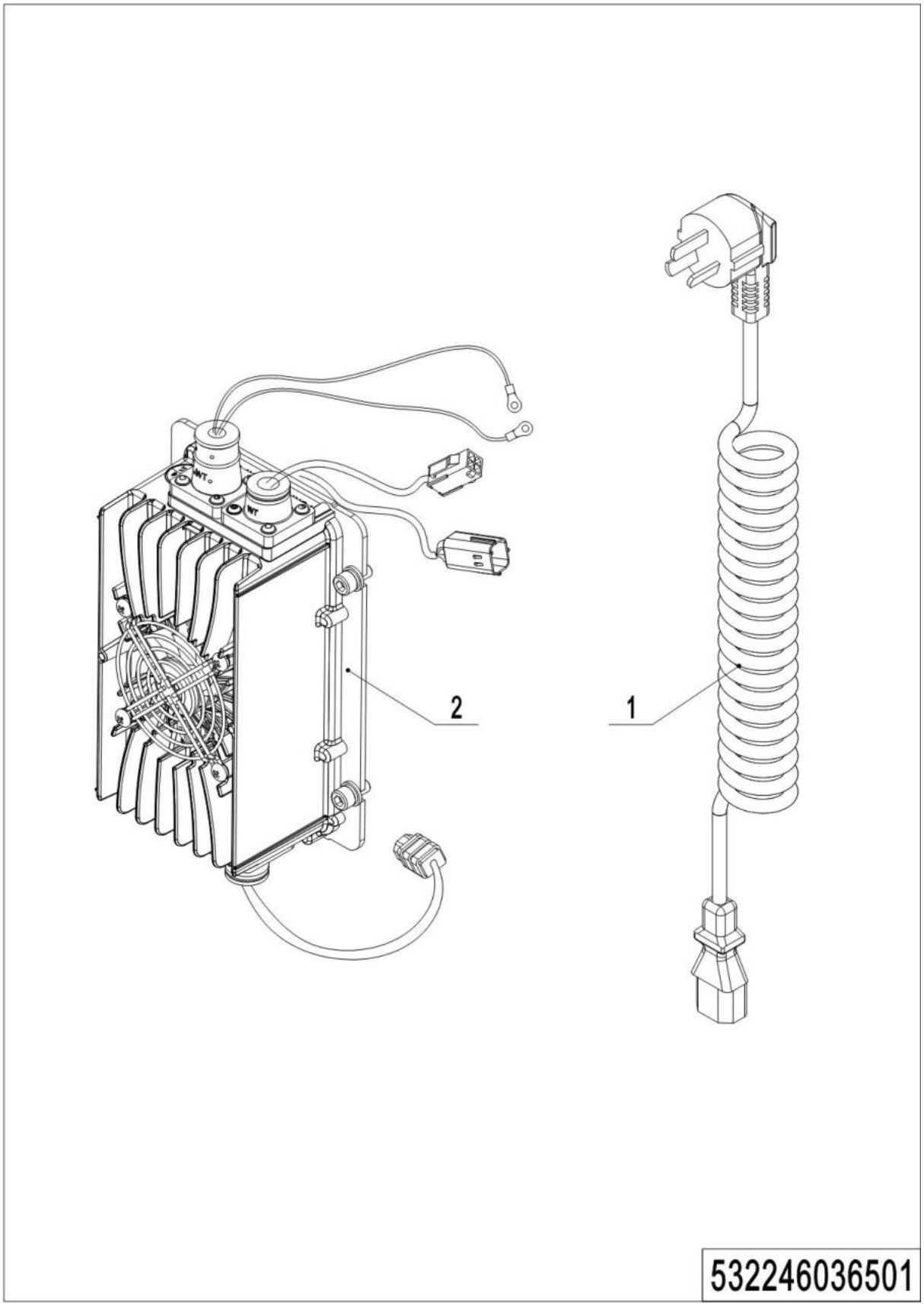

1=Supply as package; 2=Supply with limit; 3=Phasing out supply; 4=Supply as assembly; 5=Check other lists.

04 Charger (532246036501)

No.	Item Code	Mark	Item Description	Qty.	Substitute	Note
1	921500200008		Spring Cable（Asia）	1		
	921500200005		Spring Cable(EU)	1		
	921500200003		Spring Cable(AUS)	1		
	921500200004		Spring Cable(ENG)	1		
	921500200002		Spring Cable(USA)	1		
	921500200037		Spring Cable(ARG)	1		
	921500200006		Spring Cable(ITY)	1		
	921500200007		Spring Cable(SWD)	1		
	921500200029		Spring Cable(ISR)	1		
	921500200061		Spring Cable(BRA)	1		
2	921000100055		Charger24V12V	1		Lead-acid battery
	921000100052		Charger 24V25A	1		Lithium battery

Chapter 7: Special equipment

01 Load backrest (532246040501)

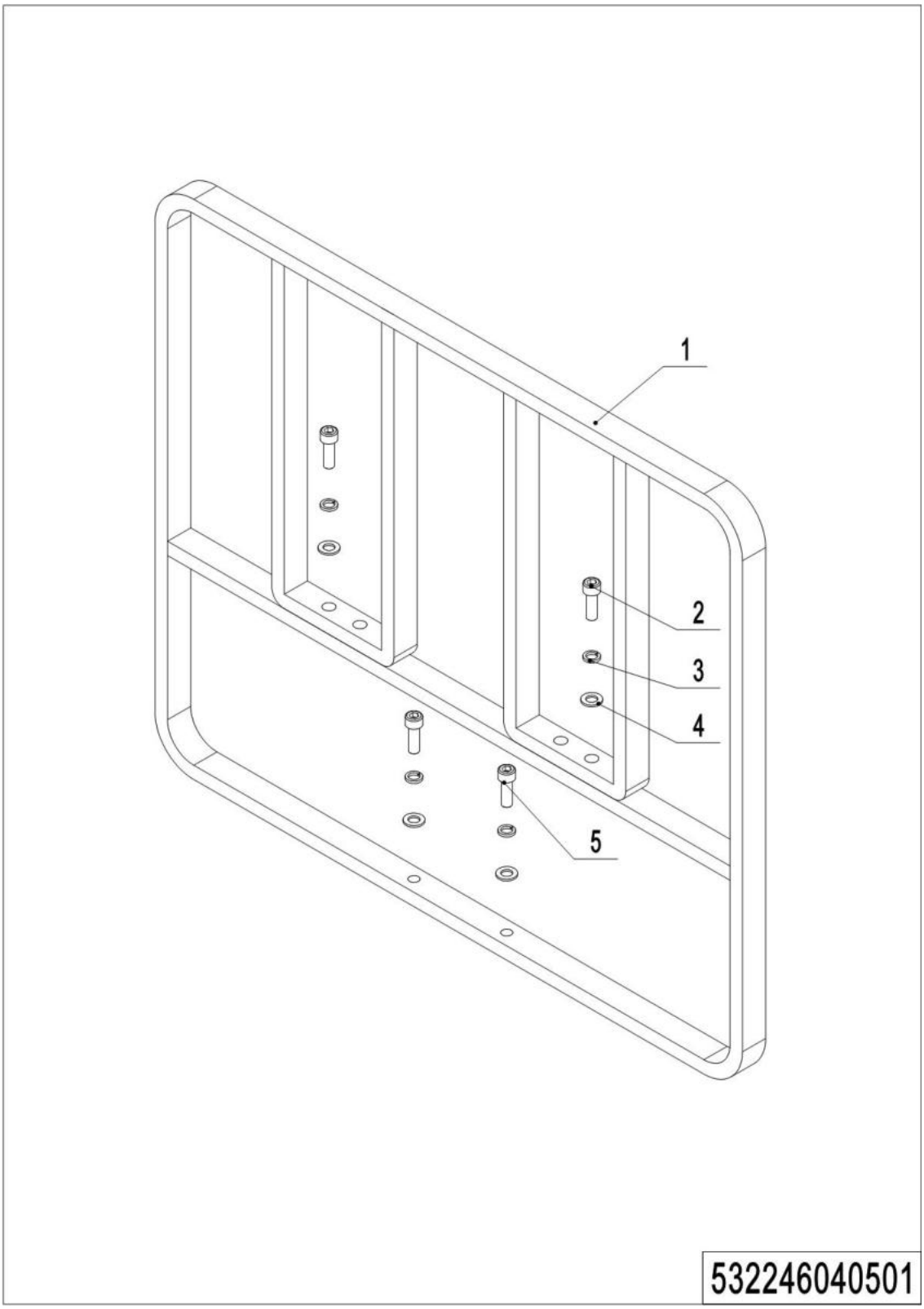

1=Supply as package; 2=Supply with limit; 3=Phasing out supply; 4=Supply as assembly; 5=Check other lists.

01 Load backrest （532246040501）

No.	Item Code	Mark	Item Description	Qty.	Substitute	Note
1	532640510001	2	Load Backrest	1		
2	910200200077	1	Screw	2		
3	910400500007	1	Spring Washer	4		
4	910400100007	1	Flat Washer	4		
5	910200200076	1	Screw	2		

02 Load backrest (Single mast) (532246040502)

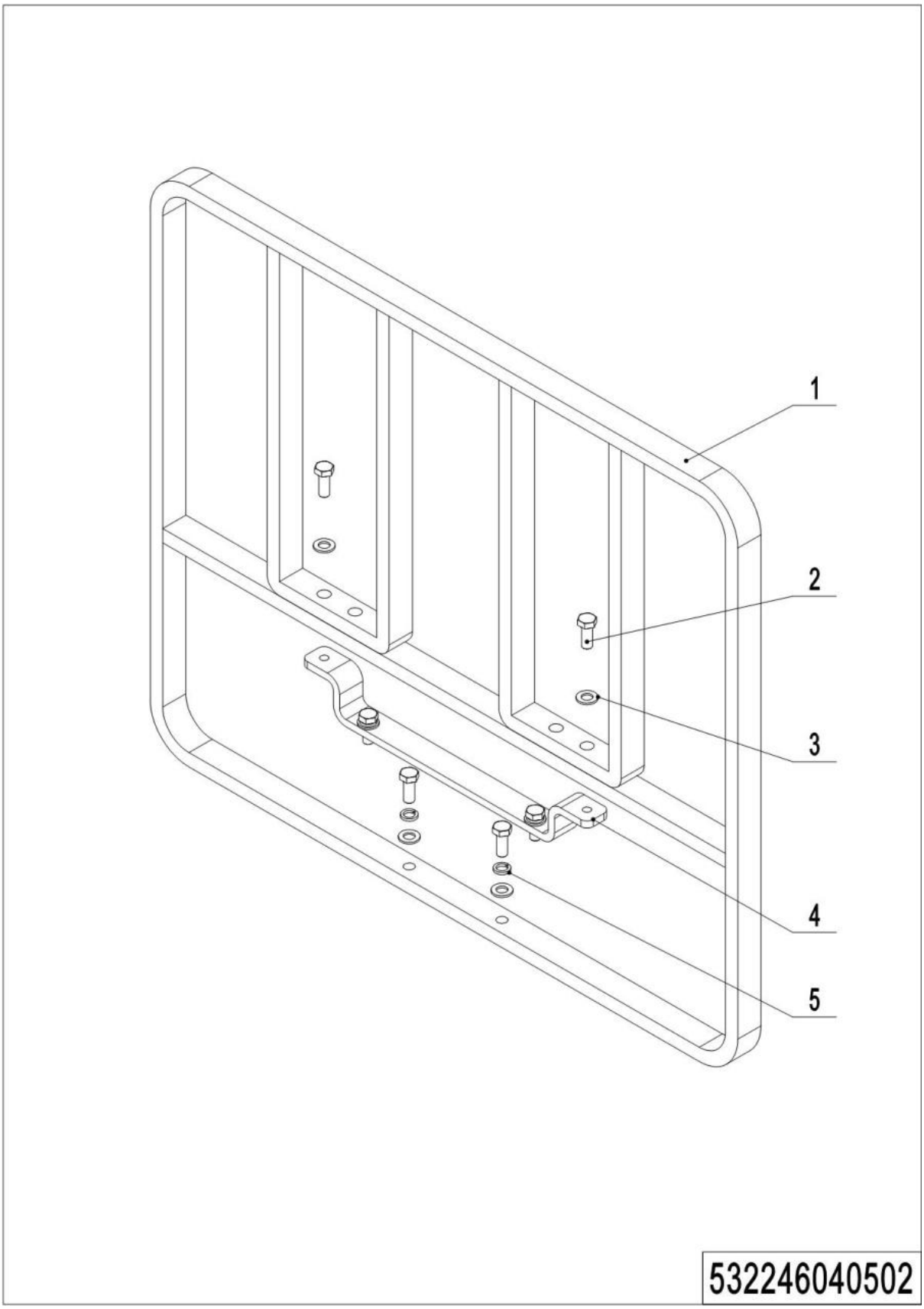

1=Supply as package; 2=Supply with limit; 3=Phasing out supply; 4=Supply as assembly; 5=Check other lists.

02 Load backrest (Single mast) (532246040502)

No.	Item Code	Mark	Item Description	Qty.	Substitute	Note
1	532640510001	2	Load Backrest	1		
2	910100300036	1	Bolt	6		
3	910400100007	1	Flat Washer	6		
4	532240520001		Division Plate	1		
5	910400500007	1	Spring Washer	4		

Chapter 8: Others

01 Labels and decals (EU) (562346047001)

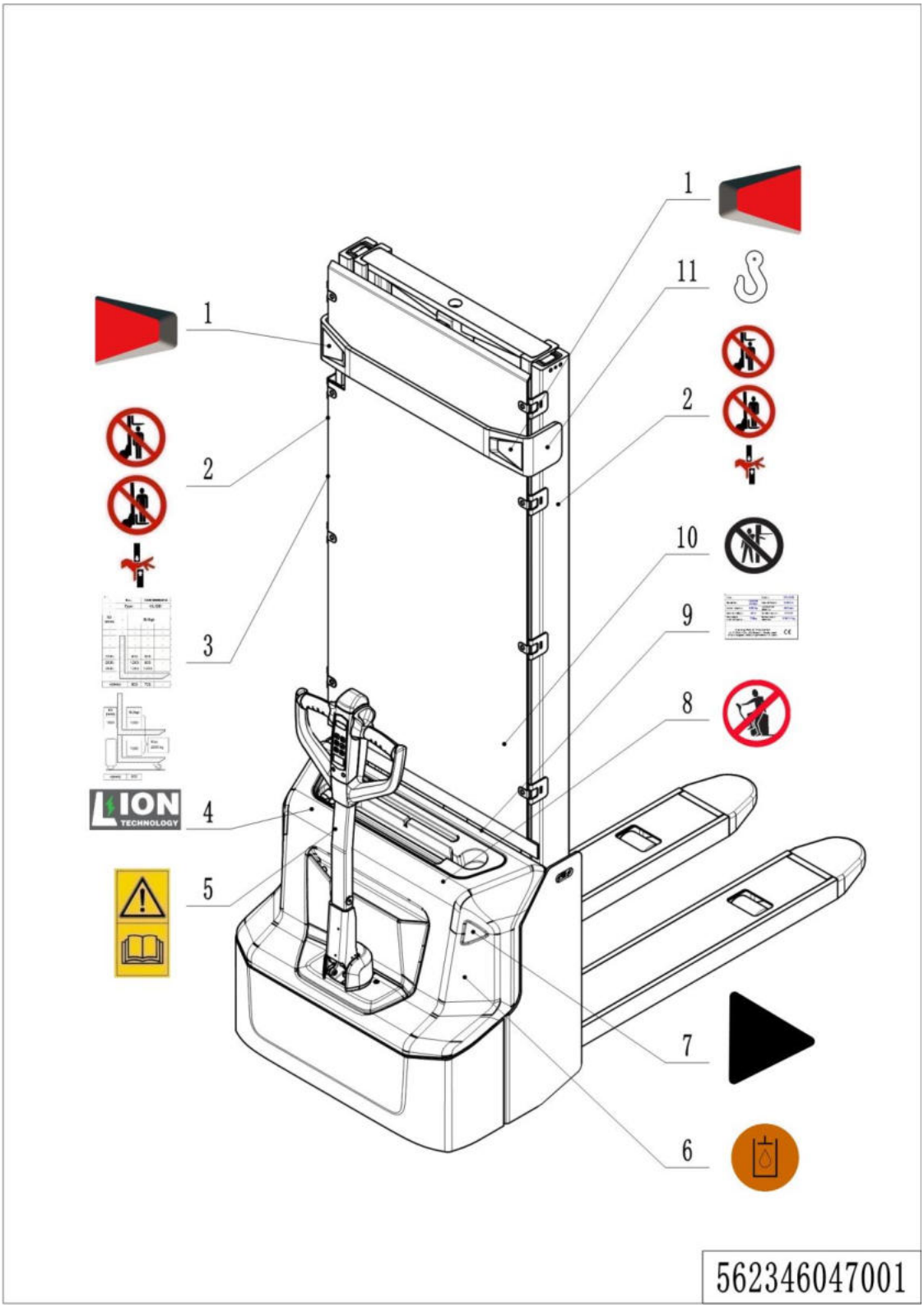

1=Supply as package; 2=Supply with limit; 3=Phasing out supply; 4=Supply as assembly; 5=Check other lists.

01 Labels and decals (EU) (562346047001)

No.	Item Code	Mark	Item Description	Qty.	Substitute	Note
1	532247020007		Label	1		
2	941200100004		Label	2		
3	562347520001		Load Capacity Diagram	1		
	562347520003		Load Capacity Diagram	1		
4	532247020002		Label	1		Lithium battery
5	941200300002		Label	1		
6	941200300003		Label	1		Inside
7	532247020000		Label	2		
8	941200100003		Label	1		
9	562347520002		Truck data plate	1		
10	941200100006		Label	1		
11	941200300001		Label	2		

02 Labels and decals (USA) (562346047002)

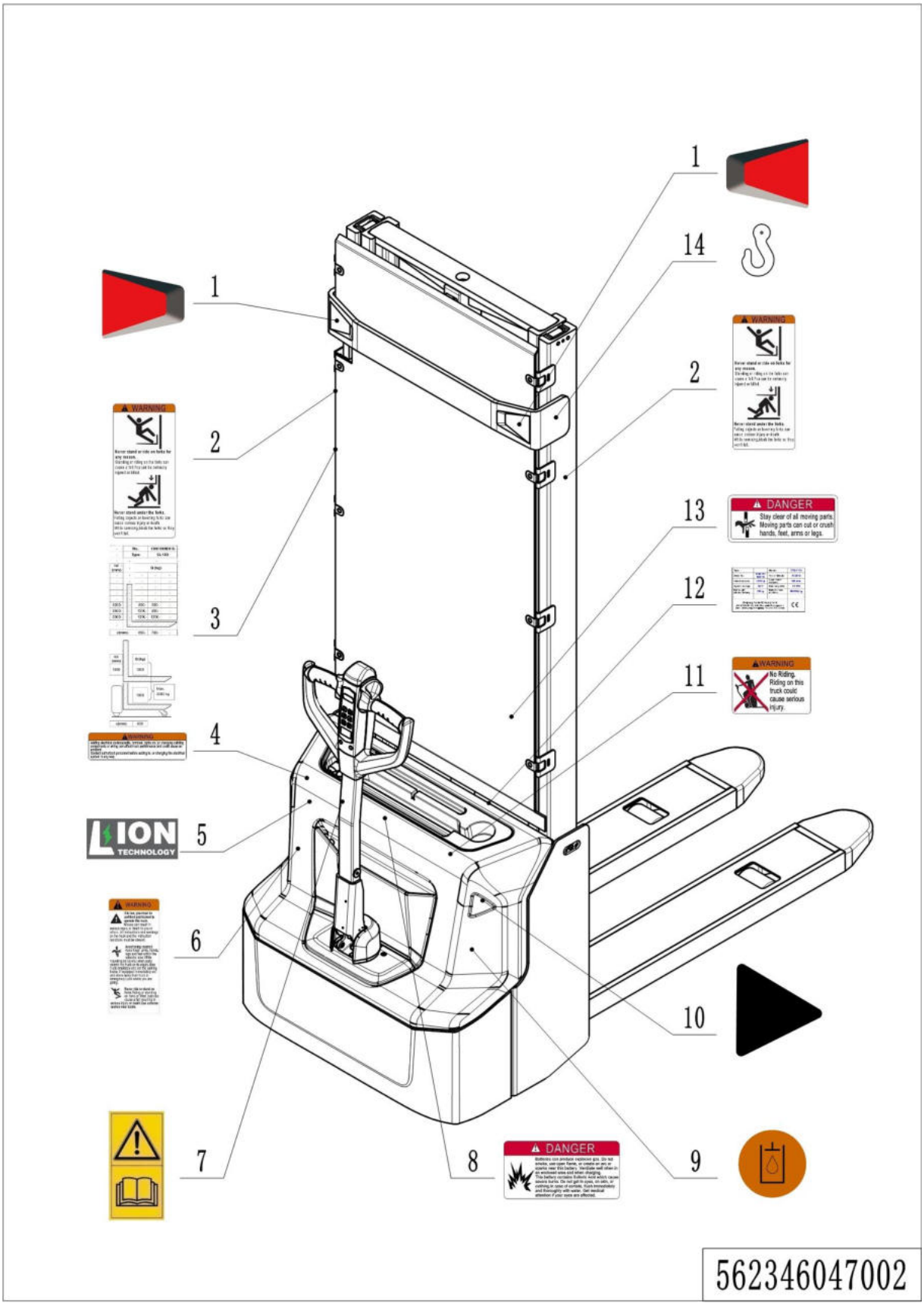

1=Supply as package; 2=Supply with limit; 3=Phasing out supply; 4=Supply as assembly; 5=Check other lists.

02 Labels and decals (USA) (562346047002)

No.	Item Code	Mark	Item Description	Qty.	Substitute	Note
1	532247020007		Label	1		
2	941200100016		Label	2		
3	562347520001		Load Capacity Diagram	1		
	562347520003		Load Capacity Diagram	1		
4	941200100010		Label	1		
5	532247020002		Label	1		Lithium battery
6	941200100009		Label	1		
7	941200300002		Label	1		
8	941200100013		Label	1		
9	941200300003		Label	1		Inside
10	532247020000		Label	2		
11	941200100011		Label	1		
12	562347520002		Truck data plate	1		
13	941200100014		Label	1		
14	941200300001		Label	2		

Appendix

01 Electrical circuit diagram (lead-acid battery) (562346045501)

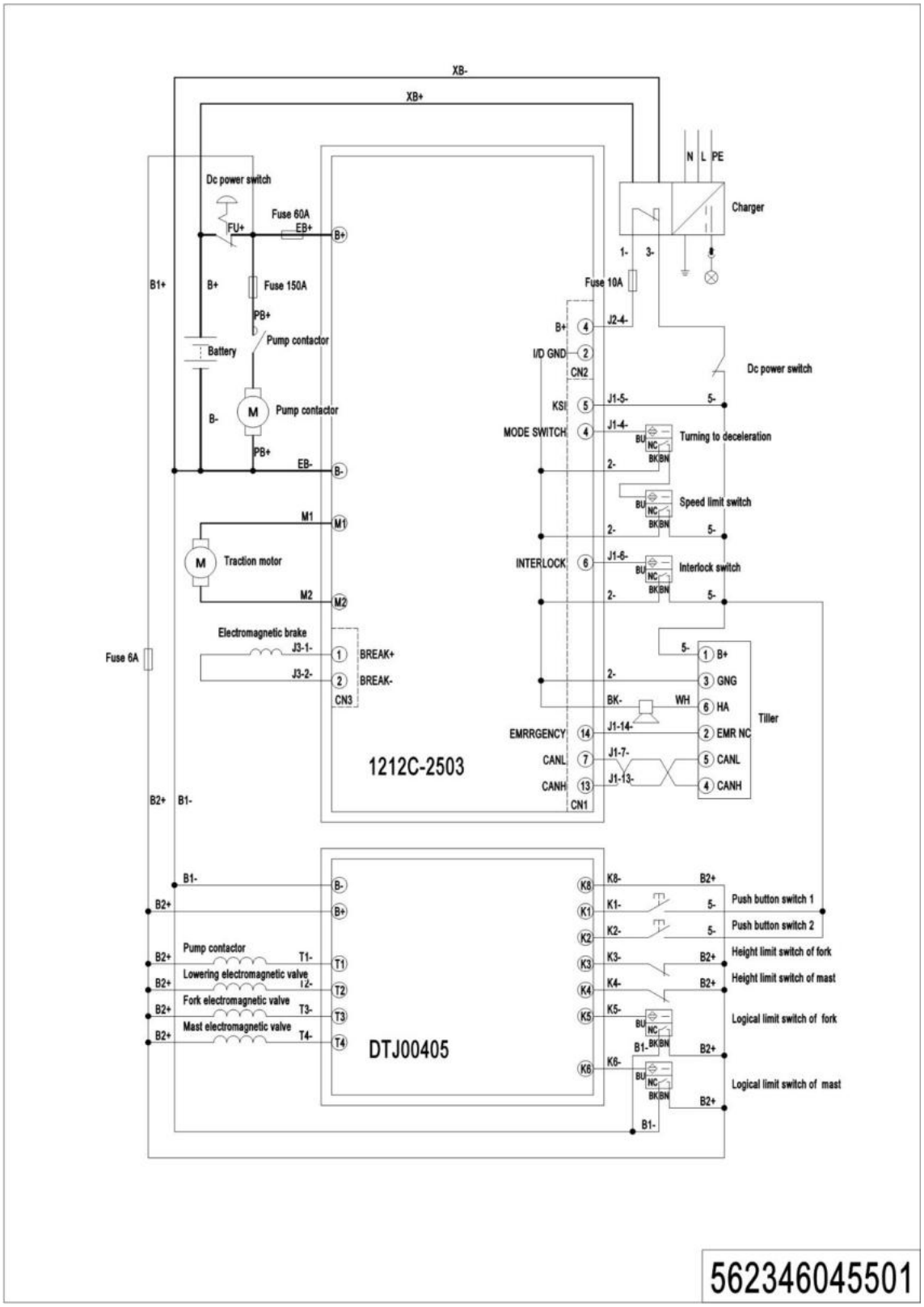

1=Supply as package; 2=Supply with limit; 3=Phasing out supply; 4=Supply as assembly; 5=Check other lists.

02 Electrical circuit diagram (Lithium battery) (562346045502)

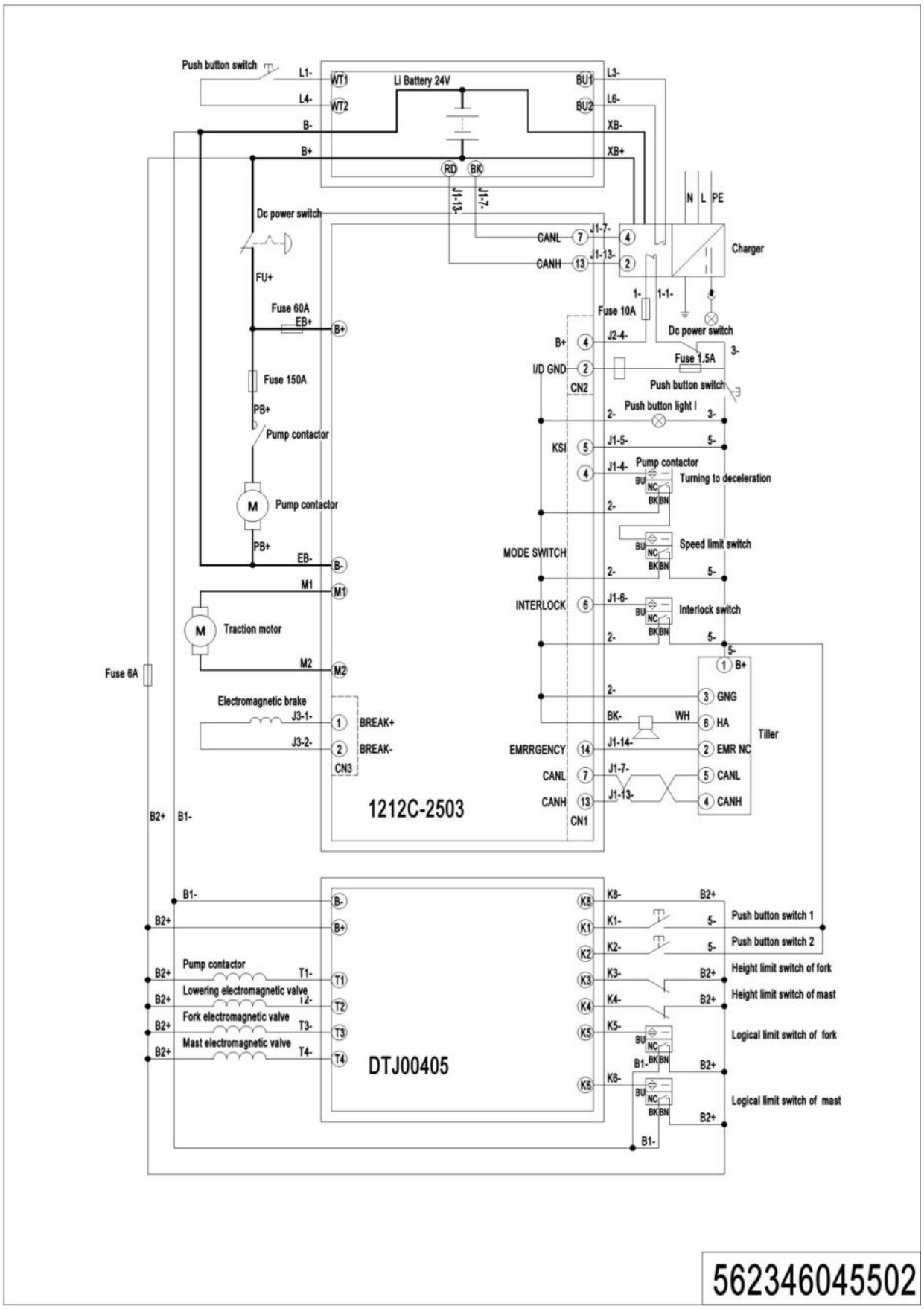

03 Hydraulic circuit diagram (562346045503)

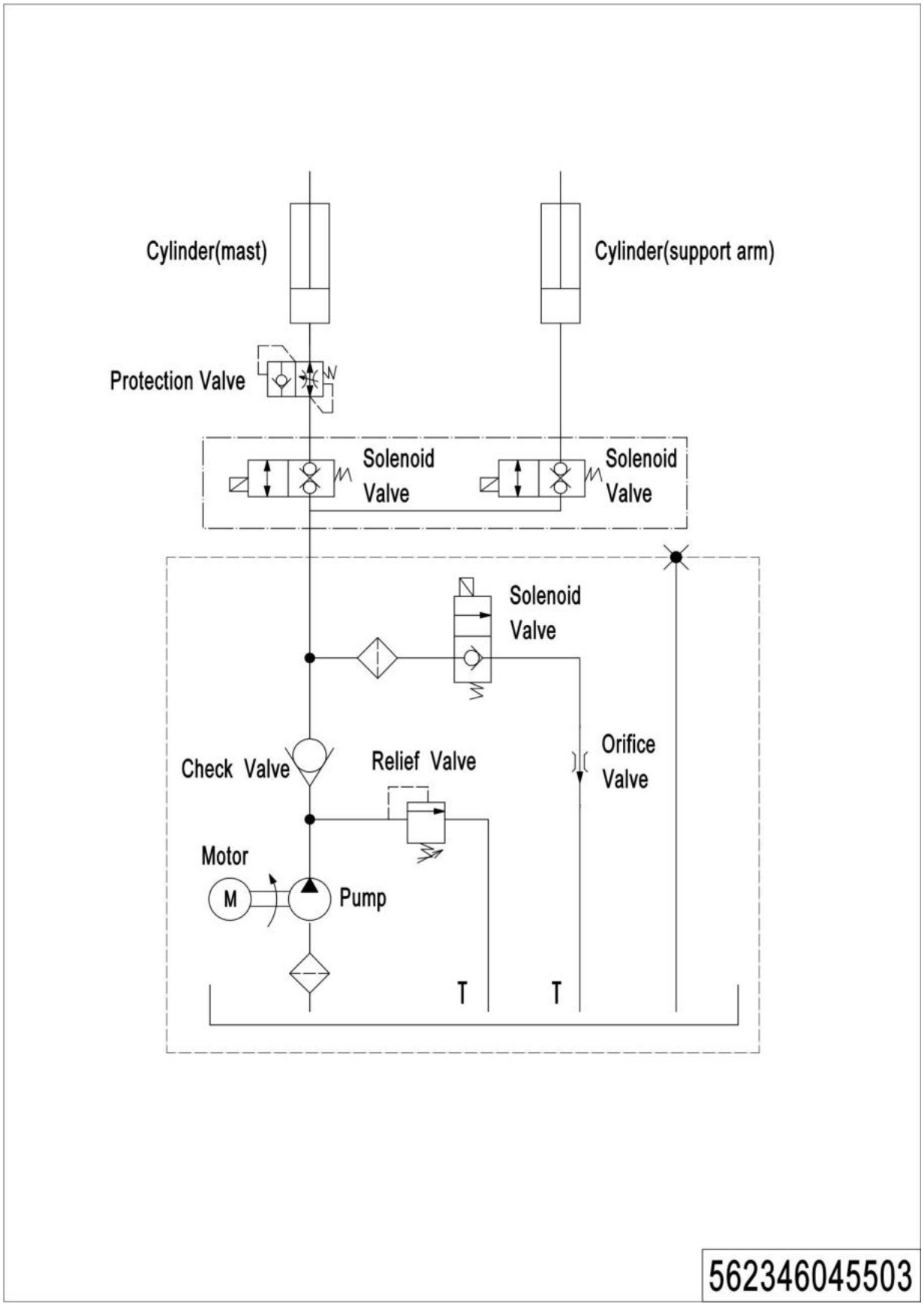

04 Easy worn parts list

No.	Item Code	Item Description	Qty.	Chapter/ Section/ Number
1	910700200019	Bearing	4	Chapter 4/03/1.01
	910700200019	Bearing	2	Chapter 4/04/10.02
2	940300300011	WheelΦ84x93	2	Chapter 4/03/1.02
3	532298510003	Wheel	2	Chapter 4/03/1
4	940300300030	WheelΦ100x50	1	Chapter 4/04/10.01
5	910700600001	Bearing	1	Chapter 4/04/15
6	910700700011	Bearing	1	Chapter 4/04/8
7	532298510004	Caster Assembly	1	Chapter 4/04/10
8	532211020003	Gas Spring	1	Chapter 4/01/10.3
9	940500200001	Bushing	2	Chapter 4/01/6
10	532298510002	Seal Kit	1	Chapter 5/01/46.01 Chapter 5/02/33.01
11	910700200020	Bearing	2	Chapter 5/01/37 Chapter 5/02/23
12	920100100003	Fuse	1	Chapter 6/03/9
13	920100100007	Fuse	1	Chapter 6/03/7
14	920100200002	Fuse	1	Chapter 6/03/2

1=Supply as package; 2=Supply with limit; 3=Phasing out supply; 4=Supply as assembly; 5=Check other lists.