Print Number: Print Date:

NOBLELIFT

Scan QR Code for More

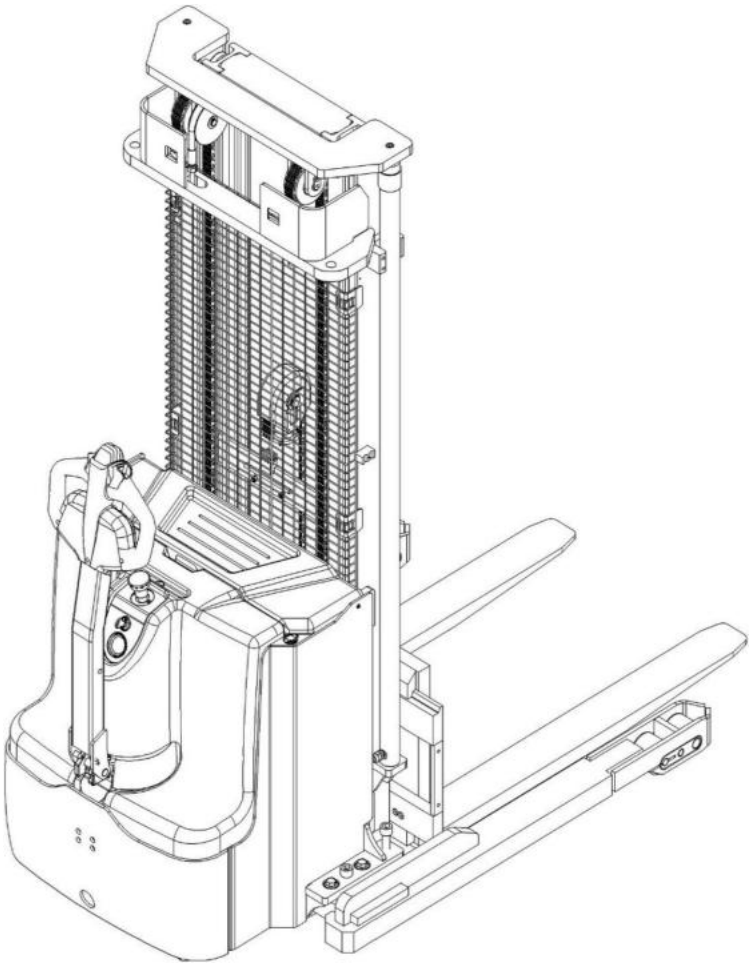

Electric Pallet Stacker PS12TSL

PARTS MANUAL

534546020101

Version : V03

Truck Identification Number From:

Parts Manual PS12TSL-PM03EN

Please order parts from authorized dealers of Noblelift Intelligent Equipment Co., LTD.

In order to avoid wrong delivery, all the orders for spare parts should specify the following items:

- Truck model, identification number and manufacture year.
- Orders for spare parts of mast, hydraulic transmission unit, steering axle, motor, etc. shall indicate the manufacture number of these parts.
- Codes for Noblelift spare parts are shown in the table of parts manual. Please also pay attention to the description of supply status, order quantity, etc. (check the number listed in "Mark" column of the parts manual).

"Mark" Column:

The unmarked indicates the parts are in short supply cycle.

Number 1: supply as package. Indicating these that parts are small parts and seal parts, which are supplied in package unit and in short supply cycle.

Number 2: supply with constraints. Indicating that these spare parts are not in stock and will be prepared for production after receiving the order from customers, which are in long supply cycle.

Number 3: phasing-out supply. Indicating that these parts will be replaced by new parts due to technical improvements and the current stock will not be available when these parts run out. Please check the description of technical improvements notice.

Number 4: supply as assembly. Indicating that these parts are assembly parts defined by manufacture process, which cannot be supplied as a single part.

Number 5: check other tables.

This parts manual is the property of Noblelift and can be shared under the confidential agreement only, Noblelift has the right to claim for compensation of any unauthorized use. Copy without permission is not allowed. Figures in the manual are not limited by the original design. Noblelift Intelligent Equipment Co., LTD reserves the right to improve the products for continuous technology progress.

Table of Contents

Chapter 1: Drive System 5
01 Drive Unit (534846013501) 5
02 Drive Assembly (535946013001) 7
Chapter 2: Hydraulic System 9
01 Hydraulic Components (534546024001) 9
02 Hydraulic Unit (534446023501) 11
Chapter 3: Truck Frame 13
01 Chassis(534546021501) 13
01 Chassis(534546021501) Continuation 15
02 Fork Carriage (534546038001) 17
Chapter 4: Mast System 19
01 Two-stage mast full free lift(534546043501) 19
01 Two-stage mast full free lift (534546043501) Continuation 1 21
01 Two-stage mast full free lift (534546043501) Continuation 2 23
02 Two-stage Mast Standard Lift (534546044001) 25
02 Two-stage Mast Standard Lift (534546044001) Continuation 27
Chapter 5: Steering System, Braking System, Wheels 29
01 Tiller Unit (504446011001) 29
02 Tiller (505646010002) 31
03 Load Wheel (534746017002) 33
04 Caster (505646016501) 35
Chapter 6: Electrical Parts 37
01Wire Harness (534546033001) 37
02 Charger (534546036501) 39
03 Charger(Li) (534546036502) 41
04 Traction Battery (534446037001) 43
05 Traction Battery (Li) (534546037001) 45
06 Display Assembly (534846010001) 47
Chapter 7: Special Parts 49
01 Load Backrest (Optional) (534846040501) 49
Chapter 8: Others 51
01 Label and Decal (EU) (534546047001) 51
02 Label and Decal (USA) (534546047002) 53
Appendix 55
01 Electrical Circuit Diagram (534846045501) 55
02 Electrical Circuit Diagram (Li) (534846045503) 56
03 Hydraulic Circuit Diagram (534546045502) 57
04 Consumable Parts List 58

Chapter 1: Drive System

01 Drive Unit (534846013501)

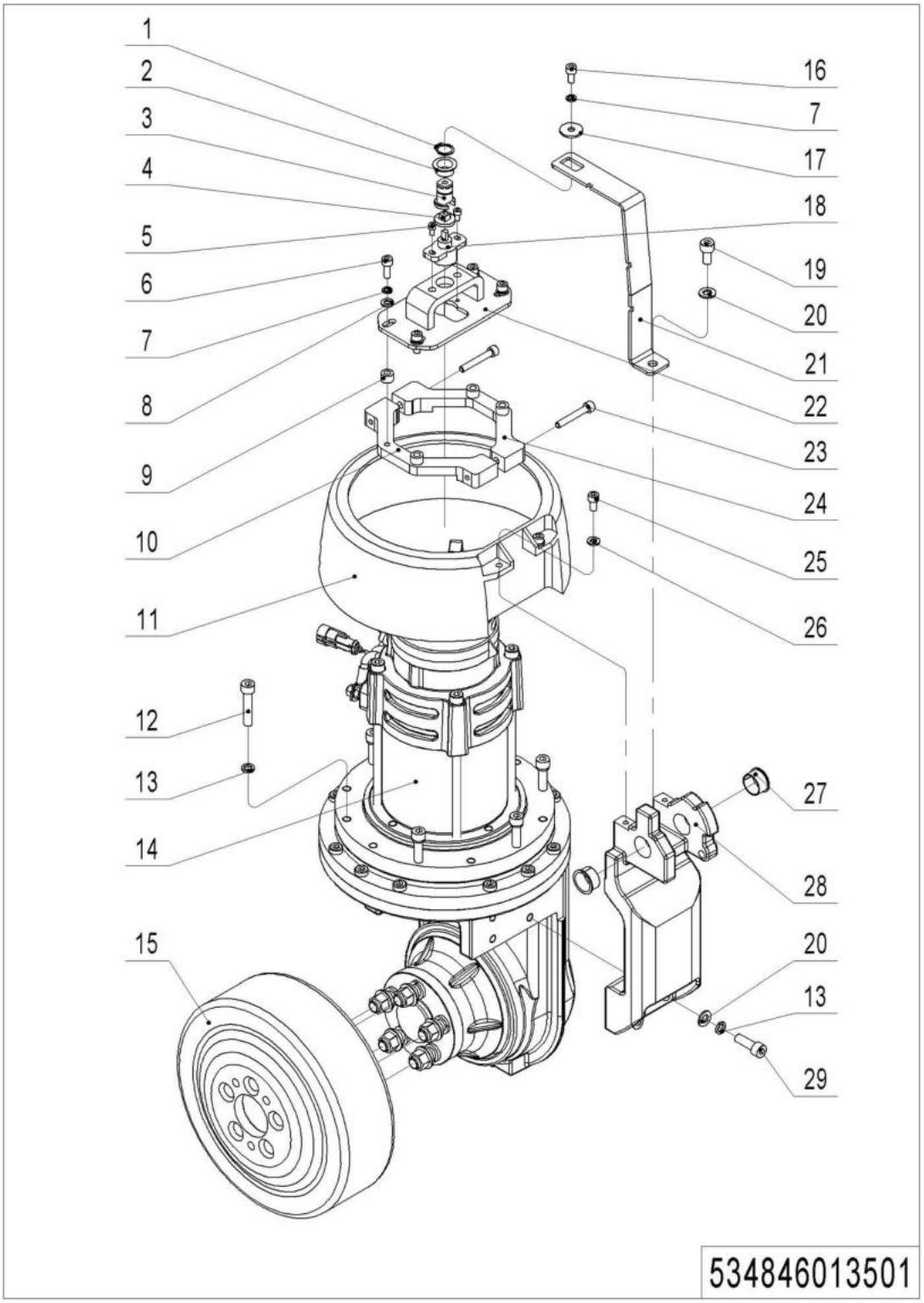

01 Drive Unit (534846013501)

No.	Item Code	Mark	Item Description	Qty.	Substitute	Note
1	910401300006	1	Circlip	1		
2	940500200001	1	Bushing	1		
3	534813520001		Pin	1		
4	505631520003		Link Block	1		
5	910200200012	1	Screw	2		
6	910200200038	1	Screw	4		
7	910400500005	1	Spring Washer	5		
8	910400100005	1	Flat Washer	4		
9	534813520010		Spacer Bush	4		
10	534813520002	2	Fixing Plate	1		
11	534713520003	2	Protective Cover	1		
12	910200200061	1	Screw	6		
13	910400500006	1	Spring Washer	10		
14	940900400004		Drive Unit	1		
15	940300400005		WheelΦ230x70	1		
16	910200200033	1	Screw	1		
17	534813520008	2	Washer	1		
18	921800200006		Potentiometer	1		
19	910200200055	1	Screw	1		
20	910400100006	1	Flat Washer	5		
21	534813520009	2	Rod	1		
22	534813510001	2	Mounting Base	1		
23	910200200041	1	Screw	2		
24	534813520003	2	Fixing Plate	1		
25	910200300017	1	Screw	2		
26	910400100005	1	Flat Washer	2		
27	940500200005	1	Bushing	2		
28	534813520000	2	Bracket	1		
29	910200200058	1	Screw	4		

02 Drive Assembly (535946013001)

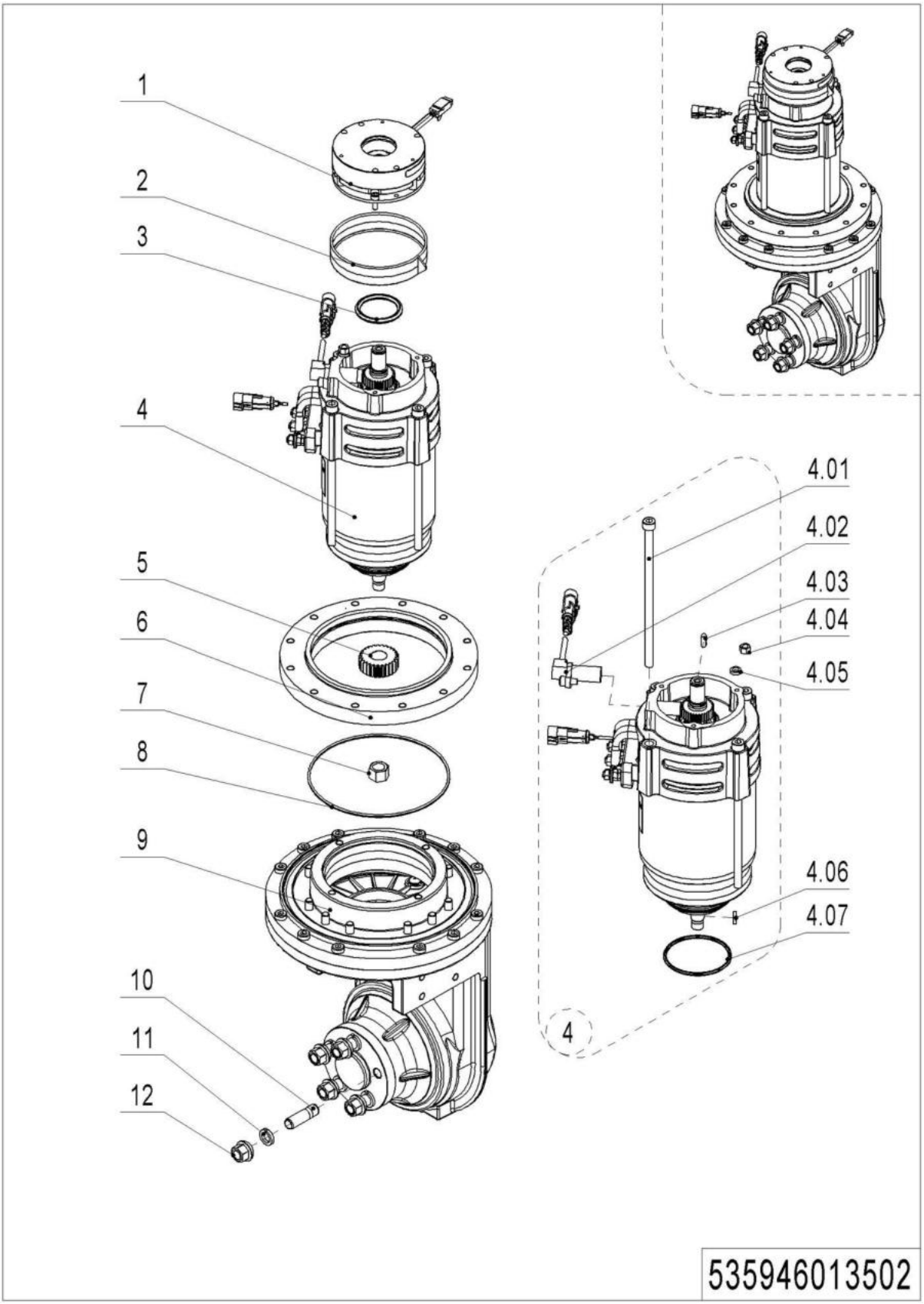

02 Drive Assembly (535946013001)

No.	Item Code	Mark	Item Description	Qty.	Substitute	Note
1	535998510001	2	Brake	1		
2	535998520001	2	Division Plate	1		
3	535998520000	2	Locating Ring	1		
4	535998510003	2	Motor	1		
4.01	535998520002	4	Screw	4		
4.02	535998510002	4	Sensor	1		
4.03	535998520005	4	Feather Key	1		
4.04	535998520003	4	Nut	1		
4.05	535998520004	4	Safety Element	1		
4.06	535998520006	4	Key	1		
4.07	535998520007	4	O-Ring	1		
5	535998520014	2	Gear	1		
6	535998520010	2	Plate	1		
7	535998520008	2	Nut	1		
8	535998520009	2	O-Ring	1		
9	535998510004	2	Gearbox Assembly	1		
10	535998520011	2	Bolt	5		
11	910400500008	1	Spring Washer	5		
12	535998520013	2	Nut	5		

Chapter 2: Hydraulic System

01 Hydraulic Components (534546024001)

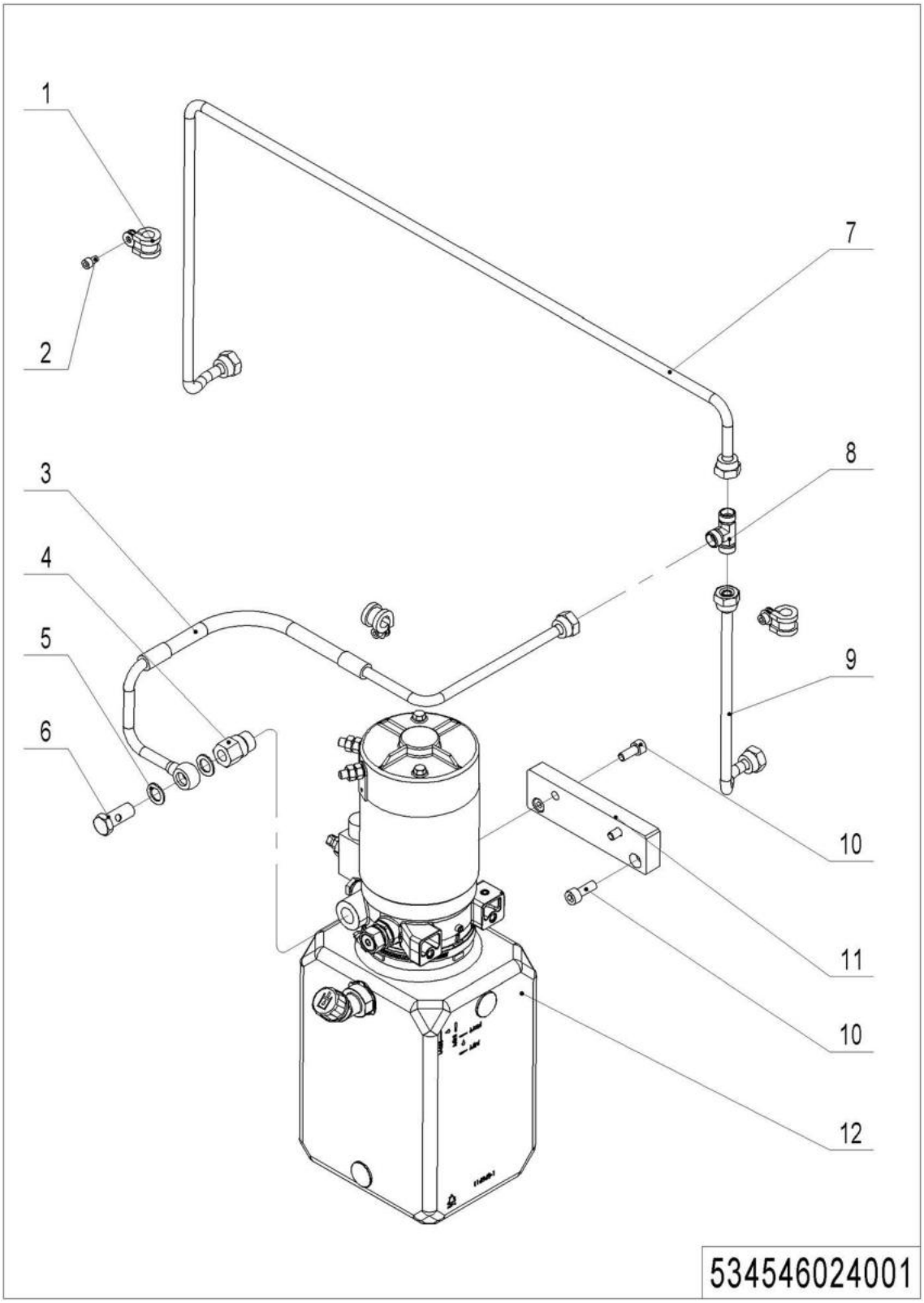

1= Supply as package. 2= Supply with constraints. 3= Phasing-out supply. 4= Supply as assembly. 5= Check other tables.

01 Hydraulic Components (534846024001)

No.	Item Code	Mark	Item Description	Qty.	Substitute	Note
1	951000100001	1	Hose Clamp	3		
2	910200200035	1	Screw	2		
3	534524010001	2	Hose	1		
4	950401200003		Joint	1		
5	910800900003	1	Bonded Washer	2		
6	911300300001	1	Hinge Bolt	1		
7	534824010008	2	Steel Tube	1		
8	950400700002		Joint	1		
9	534724010007	2	Steel Tube	1		
10	910200200057	1	Screw	4		
11	534524020000	2	Mounting Plate	1		
12	----------		Hydraulic Unit	1		Check534446023501

02 Hydraulic Unit (534446023501)

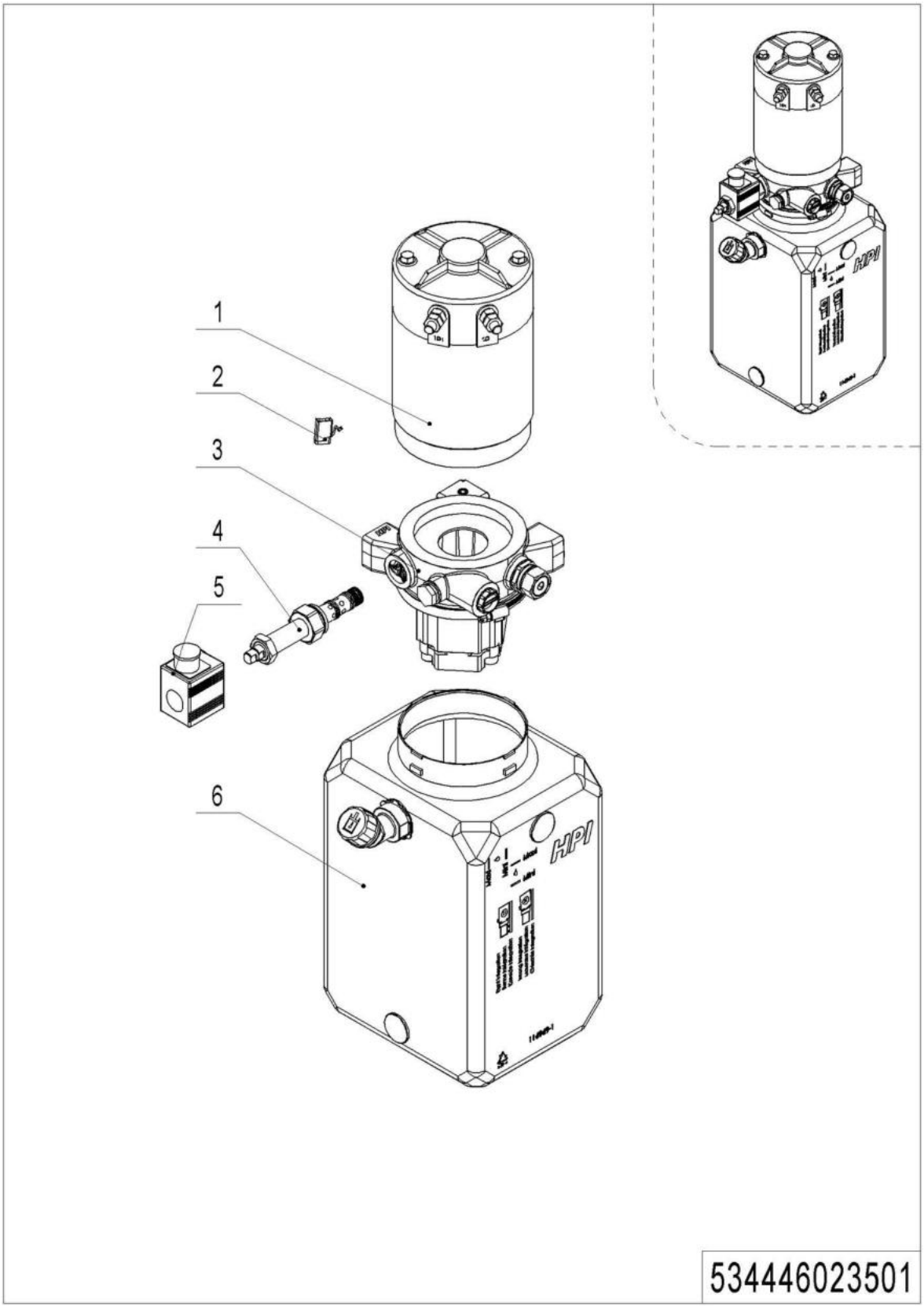

1= Supply as package. 2= Supply with constraints. 3= Phasing-out supply. 4= Supply as assembly. 5= Check other tables.

02 Hydraulic Unit (534446023501)

No.	Item Code	Mark	Item Description	Qty.	Substitute	Note
--	950900100014		Pump Unit	1		
1	534498510003	2	Motor	1		
2	534498510008	2	Carbon Brush	1		
3	534498510004	2	Valve Block	1		
4	534498510005	2	Magnetic Valve	1		
5	534498510006	2	Coil	1		
6	534498510007		Tank	1		

Chapter 3: Truck Frame

01 Chassis(534546021501)

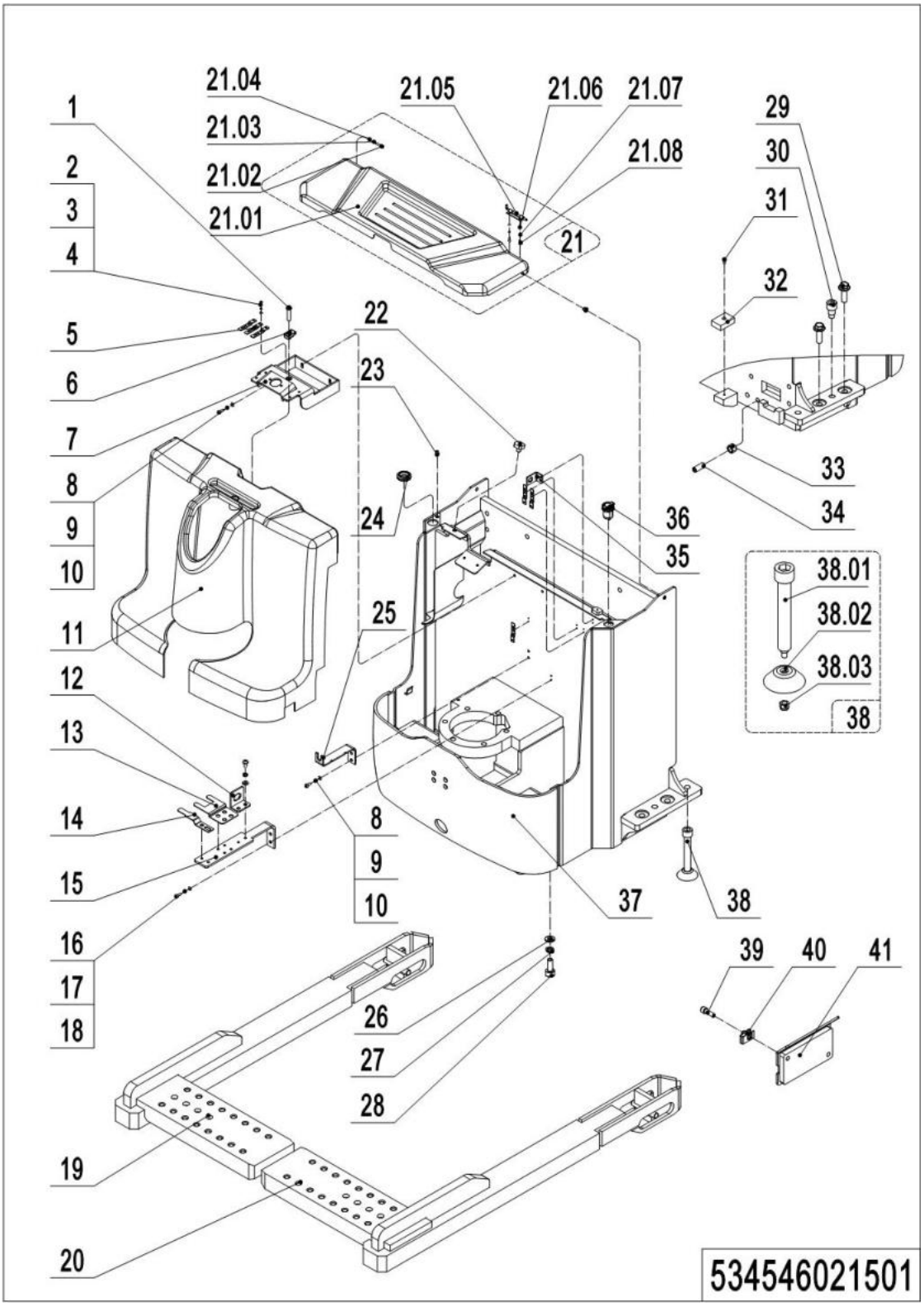

01 Chassis(534546021501)

No.	Item Code	Mark	Item Description	Qty.	Substitute	Note
1	941100100006	1	Screw	1		
2	910400100003	1	Flat Washer	22		
3	910400500003	1	Spring Washer	22		
4	910200500034	1	Screw	22		
5	921300300005	2	Holder	6		
6	940400400003	1	Cage Nut	3		
7	534521510001	2	Mounting Plate	1		
8	910200200055	1	Screw	4		
9	910400500006	1	Spring Washer	4		
10	910400100006	1	Flat Washer	4		
11	505021520003	2	Protective Cover	1		
12	921300300003	1	Holder	1		
13	921300300015	1	Holder	1		
14	921300300010	1	Connector Holder	1		
15	534521520010	2	Mounting Plate	1		
16	910400100004	1	Flat Washer	2		
17	910400500004	1	Spring Washer	2		
18	910200200022	1	Screw	2		
19	534521510003	2	Leg(left)	1		
20	534521510002	2	Leg(right)	1		
21	534821001000	2	Cell Cover	1		
21.01	534821010000	2	Cell Cover	1		
21.02	910200200024	1	Screw	1		
21.03	910400500004	1	Spring Washer	1		
21.04	910400100004	1	Flat Washer	1		
21.05	940800900001		Lock Pin	1		
21.06	910400100003	1	Flat Washer	2		
21.07	910400500003	1	Spring Washer	2		
21.08	910200200013	1	Screw	2		

01 Chassis(534546021501) Continuation

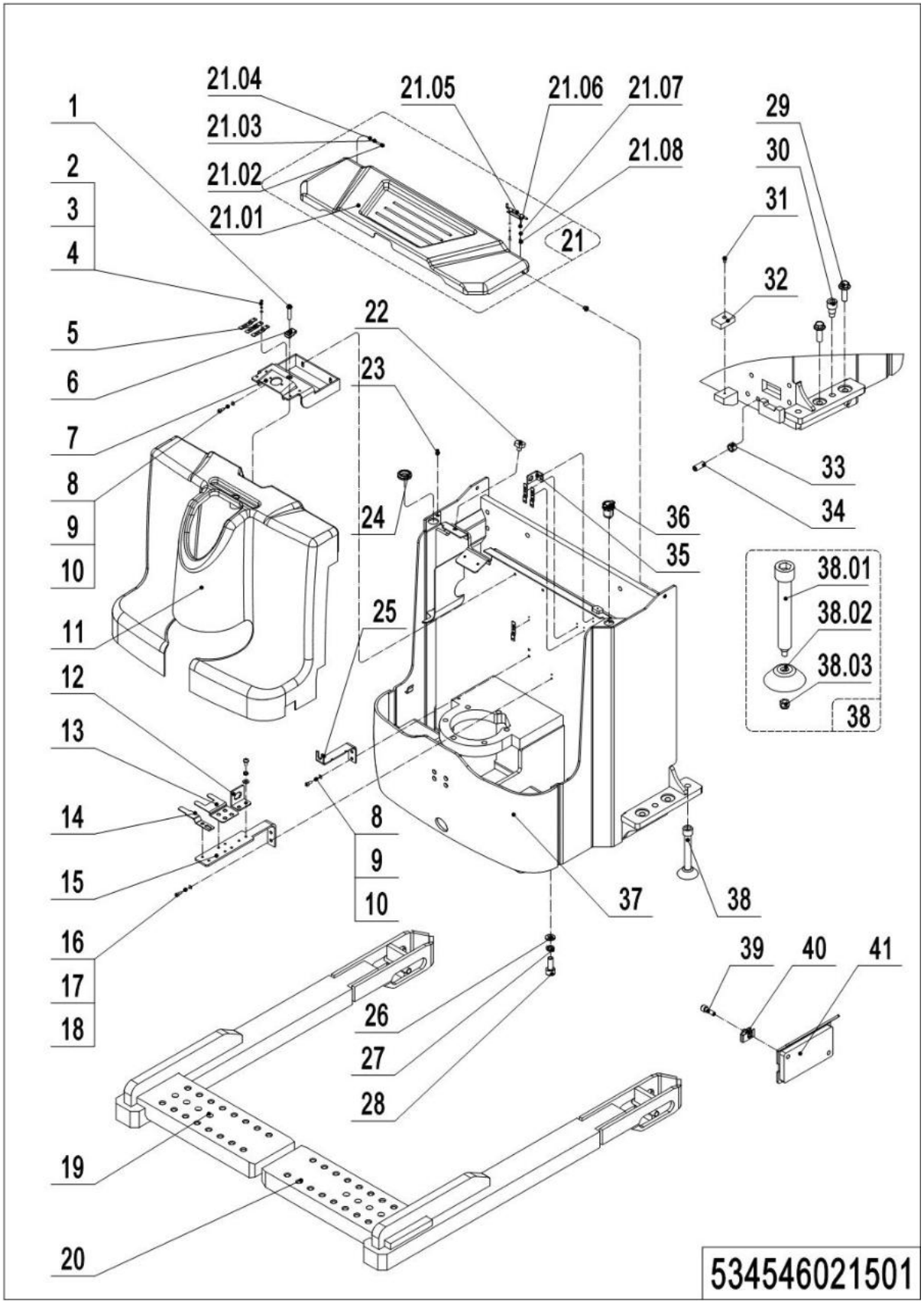

01 Chassis(534546021501) Continuation

No.	Item Code	Mark	Item Description	Qty.	Substitute	Note
22	505938520016		Crash Pad	2		
23	922000100024		Lamp Holder	1		
24	505621520036		Jacket	1		
25	534721520025	2	Fixing Mount	1		
26	910400100007	1	Flat Washer	16		
27	910400500007	1	Spring Washer	16		
28	910200200076	1	Screw	8		
29	910100800006	1	Bolt	12		
30	532621520047		Locating Pin	2		
31	910200300017	1	Screw	2		
32	534721520024		Crash Pad	2		
33	910300100010	1	Nut	6		
34	910200800042	1	Screw	6		
35	921300300002	2	Holder	1		
36	206033010036		USB interface	1		
37	534521510000	2	Chassis	1		
38	532621510013	2	Support Leg Kit	2		
38.01	532621520029	2	Screw	2		
38.02	532621520030	2	Support Leg	2		
38.03	910300500004	1	Nut	2		
39	910200200057	1	Screw	4		Lithium Battery
40	940400400002	1	Cage Nut	4		Lithium Battery
41	534521510010		Baffle	2		Lithium Battery

02 Fork Carriage (534546038001)

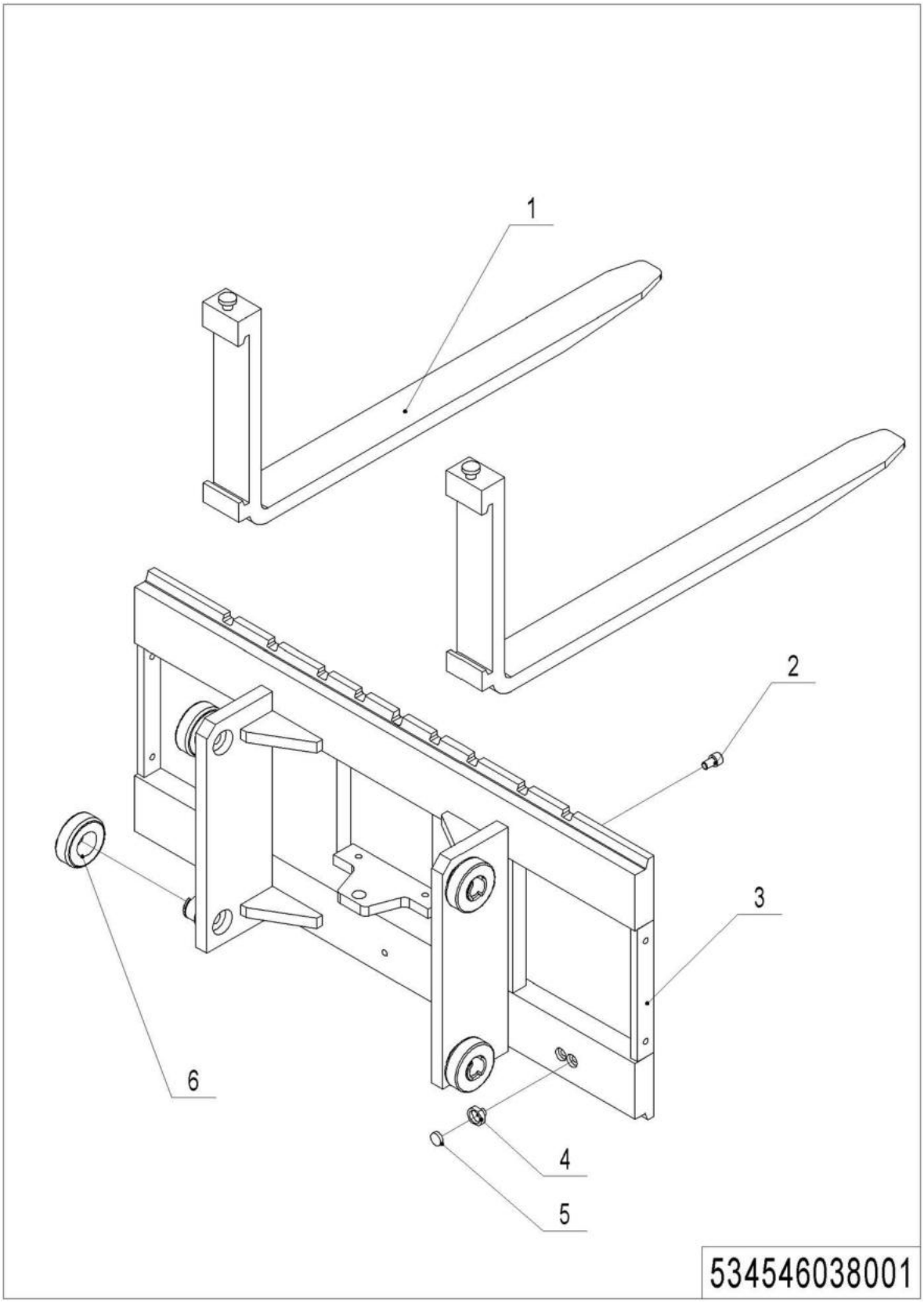

1= Supply as package. 2= Supply with constraints. 3= Phasing-out supply. 4= Supply as assembly. 5= Check other tables.

02 Fork Carriage (534546038001)

No.	Item Code	Mark	Item Description	Qty.	Substitute	Note
1	940100100004	2	Fork100x35x1150	2		
2	910200200074	1	Screw	3		
3	534538010000	2	Fork Bracket	1		Two-stage mast full free lift
3	534538010001	2	Fork Bracket	1		Two-stage mast standard lift
4	940600200001	2	Mounting Base	1		
5	940600100001		Magnetic Steel	1		
6	940200300001		Compound Roller	4		

Chapter 4: Mast System

01 Two-stage mast full free lift(534546043501)

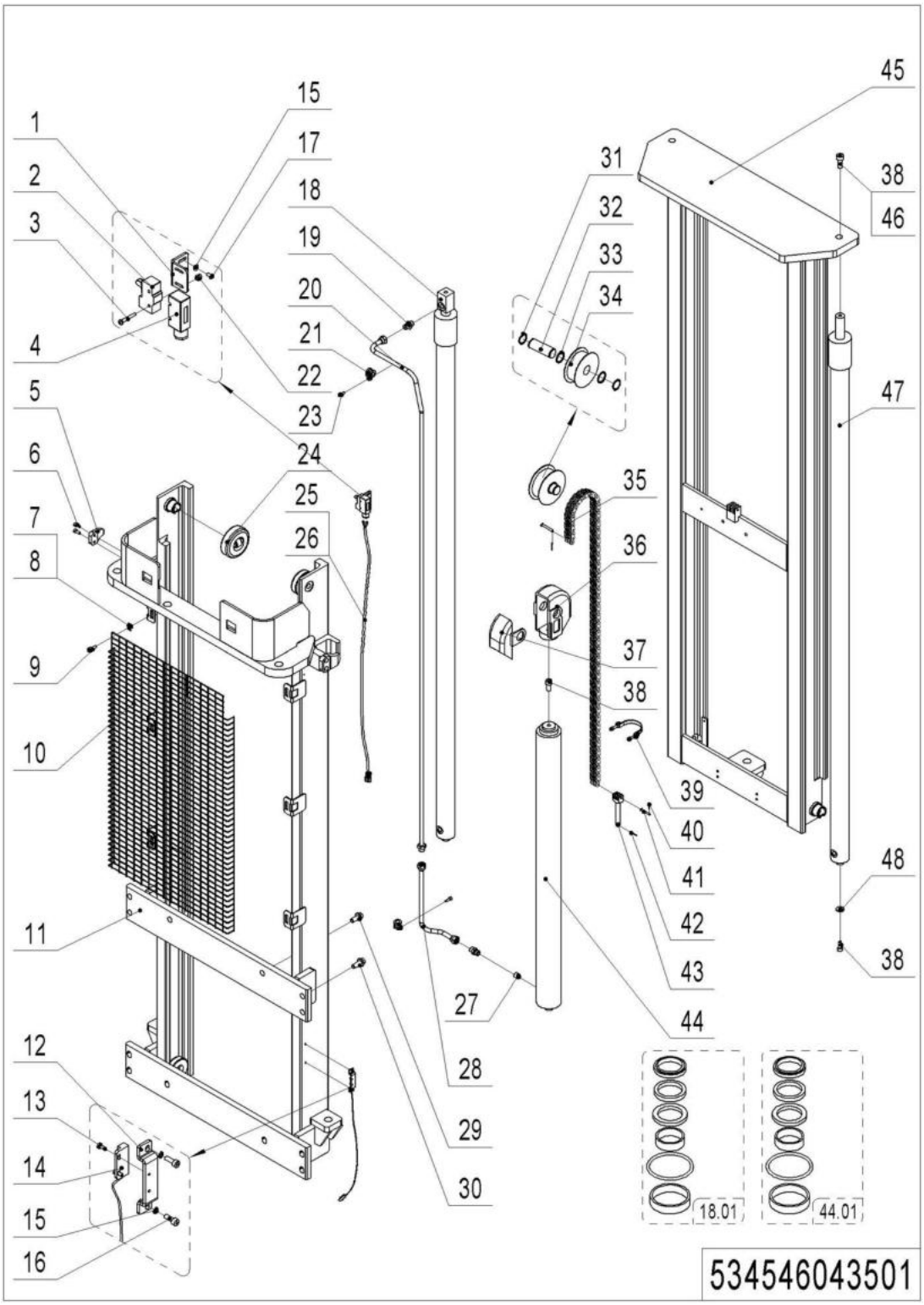

01 Two-stage mast full free lift (534546043501)

No.	Item Code	Mark	Item Description	Qty.	Substitute	Note
1	534744520036	2	Fixing Plate	1		
2	920200300001		Microswitch	1		
3	910200500028	1	Screw	2		
4	920200300008		Protective Cover	1		
5	275044020076	2	Fixing Plate	2		
6	910200200057	1	Screw	4		
7	940801500001	1	Cage Nut	6		
8	320443020321	1	Press Plate	6		
9	910200200038	1	Screw	6		
10	534444020022	2	Protective Frame	1		
10	534444020021	2	Protective Frame	1		
10	534444020020	2	Protective Frame	1		
11	534543510002	2	Outer Mast(2900)	1		
11	534543510001	2	Outer Mast(3200)	1		
11	534543510000	2	Outer Mast(3600)	1		
12	534744520059	2	Protective Cover	1		
13	910200500010	1	Screw	2		
14	534833510003		Switch	1		
15	910400100003	1	Flat Washer	4		
16	910200200015	1	Screw	2		
17	910200300005	1	Screw	2		
18	534444010017	2	Cylinder	1		2900
18	534444010016	2	Cylinder	1		3200
18	534444010015	2	Cylinder	1		3600
18.01	534498510000		Seal Kit	2		Also for cylinder 47
19	950400400003		Joint	3		
20	534743510017	2	Steel Tube	1		
20	534743510016	2	Steel Tube	1		
20	534443520001	2	Steel Tube	1		

01 Two-stage mast full free lift (534546043501) Continuation 1

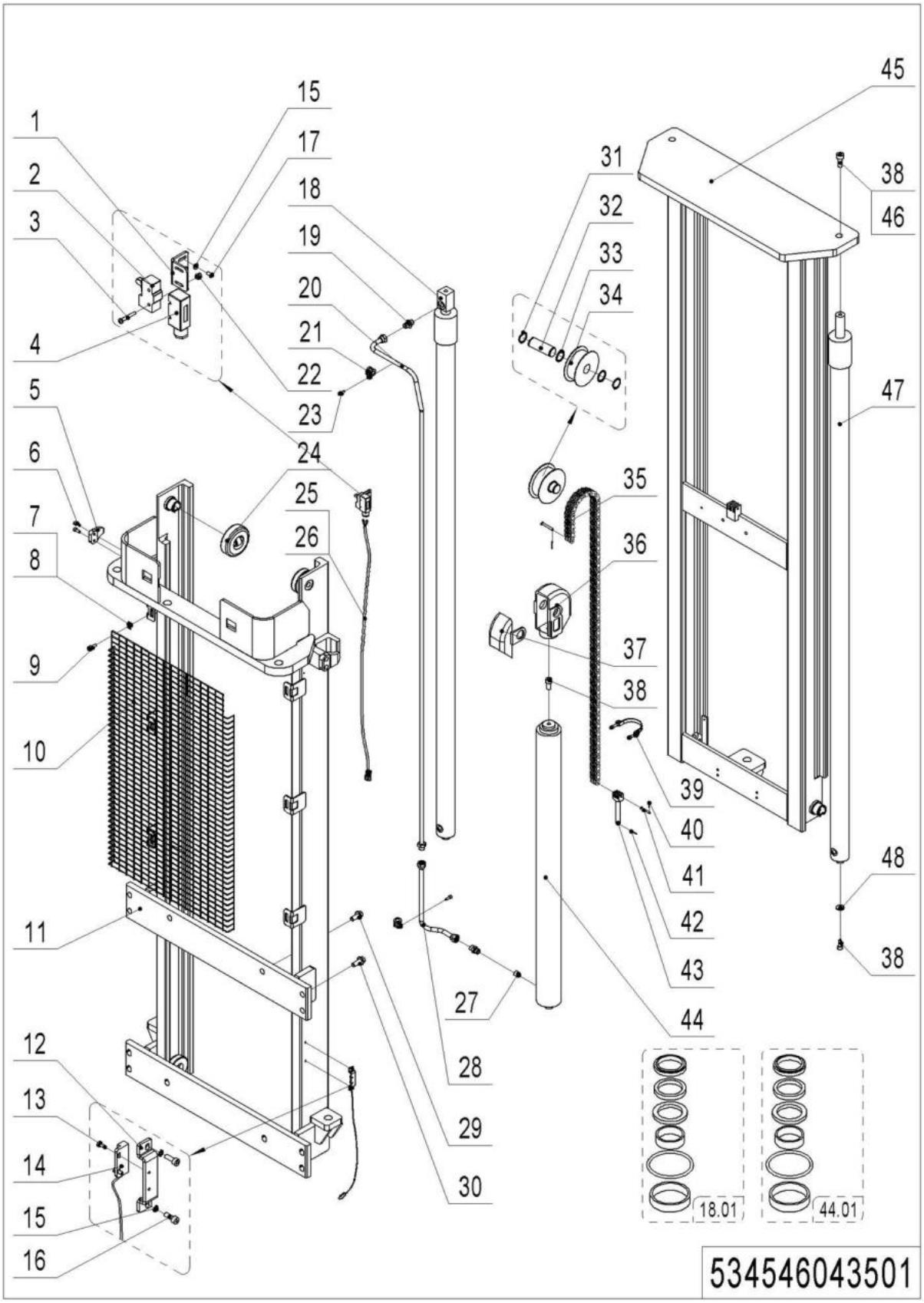

01 Two-stage mast full free lift (534546043501) Continuation 1

No.	Item Code	Mark	Item Description	Qty.	Substitute	Note
21	951000100001		Hose Clamp	2		
22	910300500001	1	Nut	2		
23	910200200035	1	Screw	2		
24	940200300001		Compound Roller	4		
25	534833510001	2	Wire Harness	1		2900
25	534733010015	2	Wire Harness	1		3200
25	534833510002	2	Wire Harness	1		3600
26	921600400003	1	Cable Tie	5		
27	950600300001		Safety Valve	2		
28	534743510018	2	Steel Tube	1		
29	910100800005	1	Bolt	4		
30	910100800006	1	Bolt	8		
31	910401300016	1	Circlip	2		
32	532644520037	2	Axle	1		
33	940600500008	1	Washer	6		
34	940200500010		Sprocket Bearing	1		
35	251044510096	2	Chain	1		2900
35	534744510024	2	Chain	1		3200
35	532644510079	2	Chain	1		3600
36	532644520036	2	Side Cover	1		
37	532644520035	2	Yoke	1		
38	910200200097	1	Screw	5		
39	940800600002		Hoop	1		
40	910600600015	1	Cotter Pin	2		
41	941100800006	1	Pin	2		
42	910600600032	1	Cotter Pin	1		
43	532644520038		Chain Anchor	1		
44	534444010020	2	Cylinder	1		2900
44	534444010019	2	Cylinder	1		3200

01 Two-stage mast full free lift (534546043501) Continuation 2

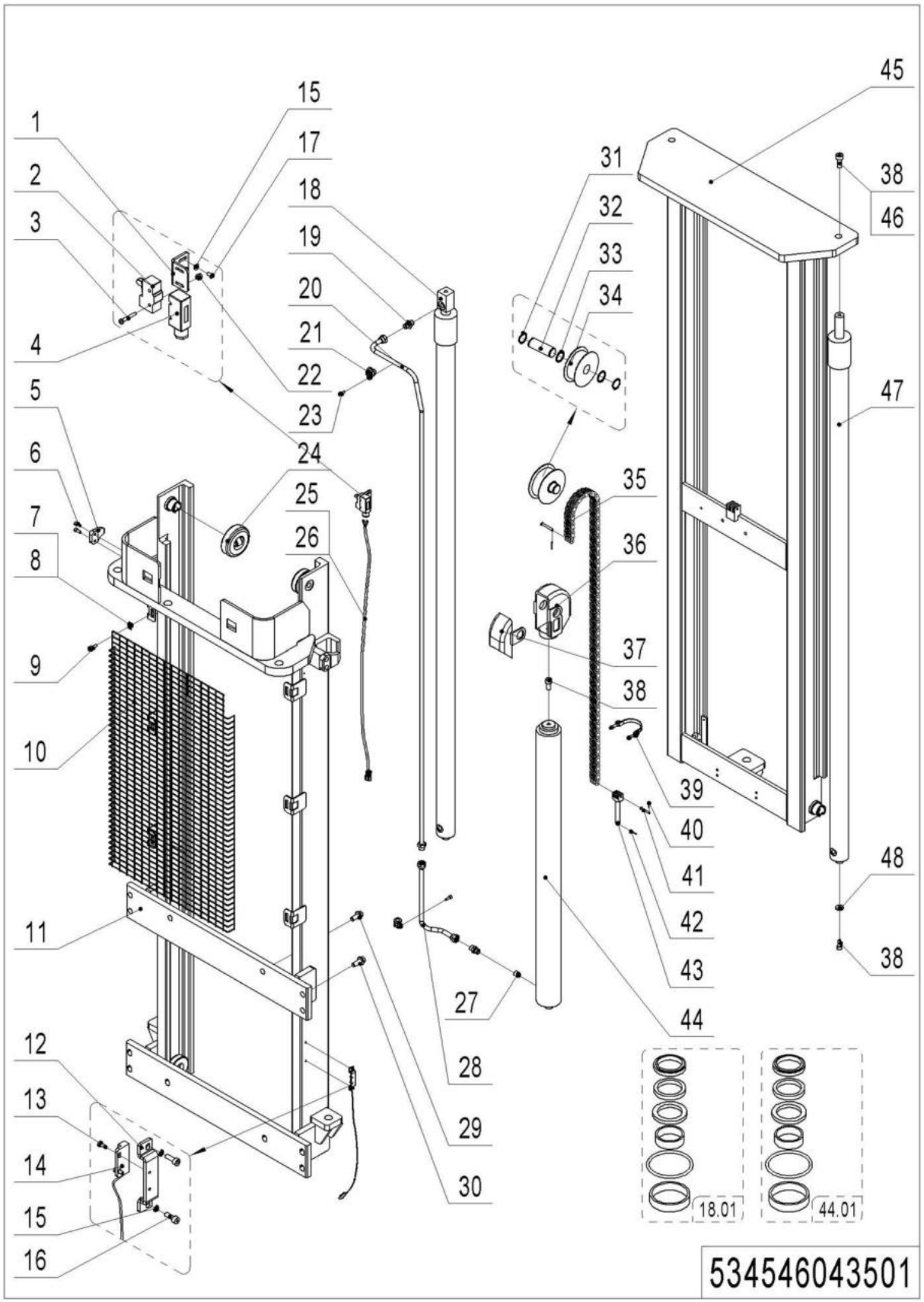

01 Two-stage mast full free lift (534546043501) Continuation 2

No.	Item Code	Mark	Item Description	Qty.	Substitute	Note
44	534444010018	2	Cylinder	1		3600
44.01	534498510001		Seal Kit	1		
45	534443510005	2	Inner Mast(2900)	1		
45	534443510003	2	Inner Mast(3200)	1		
45	534443510001	2	Inner Mast(3600)	1		
46	910400500008	1	Spring Washer	2		
47	534444010023	2	Cylinder	1		2900
47	534444010022	2	Cylinder	1		3200
47	534444010021	2	Cylinder	1		3600
48	534744520015		Subplate	2		

02 Two-stage Mast Standard Lift (534546044001)

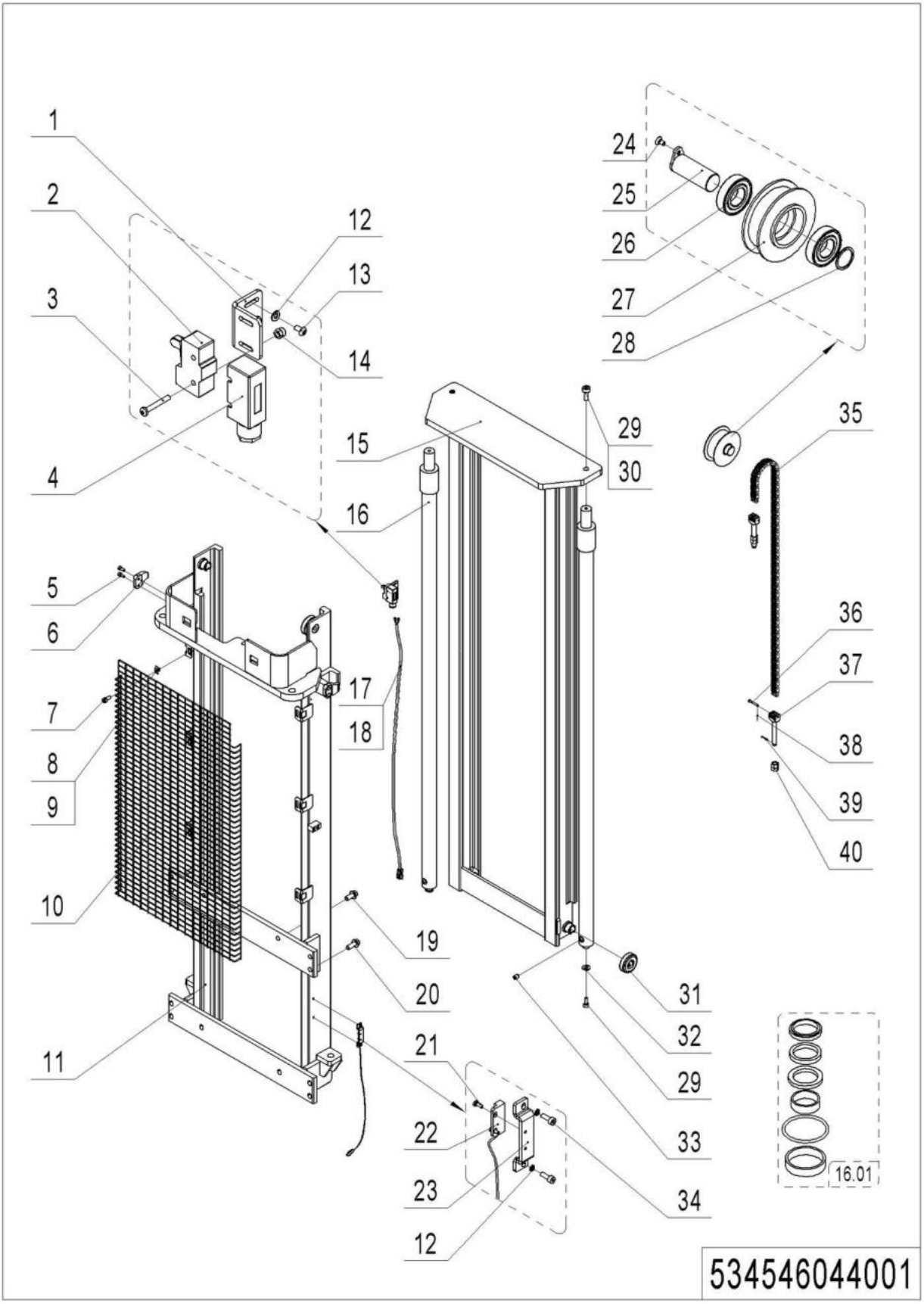

02 Two-stage Mast Standard Lift (534546044001)

No.	Item Code	Mark	Item Description	Qty.	Substitute	Note
1	534744520036	2	Fixing Plate	1		
2	920200300001		Microswitch	1		
3	910200500028	1	Screw	2		
4	920200300008		Protective Cover	1		
5	910200200057	1	Screw	4		
6	275044020076	2	Fixing Plate	2		
7	910200200038	1	Screw	4		
8	940801500001	1	Cage Nut	6		
9	320443020321	1	Press Plate	6		
10	534444020022	2	Protective Frame	1		2900
10	534444020021	2	Protective Frame	1		3200
11	534444020020	2	Protective Frame	1		3600
11	534544010002	2	Outer Mast(2900)	1		
11	534544010001	2	Outer Mast(3200)	1		
11	534544010000	2	Outer Mast(3600)	1		
12	910400100003	1	Flat Washer	4		
13	910200300005	1	Screw	2		
14	910300500001	1	Nut	2		
15	534444010014	2	Inner Mast(2900)	1		
15	534444010012	2	Inner Mast(3200)	1		
15	534444010010	2	Inner Mast(3600)	1		
16	534444010008	2	Cylinder	2		2900
16	534444010007	2	Cylinder	2		3200
16	534444010006	2	Cylinder	2		3600
16.01	534498510002		Seal Kit	2		
17	921600400003	1	Cable Tie	5		
18	534833510001	2	Wire Harness	1		2900
18	534733010015	2	Wire Harness	1		3200
18	534833510002	2	Wire Harness	1		3600

02 Two-stage Mast Standard Lift (534546044001) Continuation

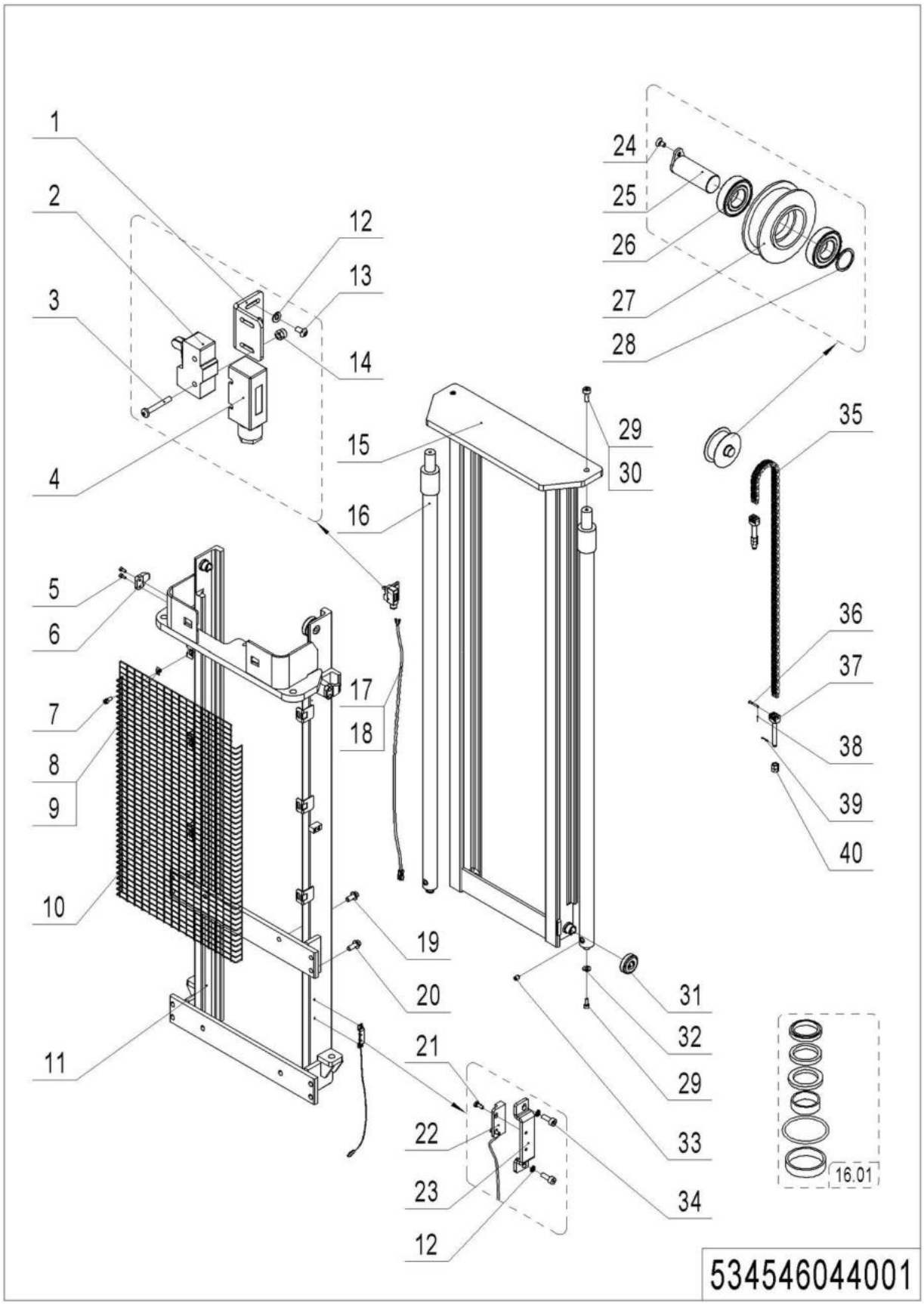

02 Two-stage Mast Standard Lift (534546044001) Continuation

No.	Item Code	Mark	Item Description	Qty.	Substitute	Note
19	910100800005	1	Bolt	4		
20	910100800006	1	Bolt	8		
21	910200500010	1	Screw	2		
22	534833510003		Switch	1		
23	534744520059	2	Protective Cover	1		
24	910200400016	1	Screw	1		
25	533544510006		Pin	1		
26	910700200021		Bearing	2		
27	940200400006		Sprocket	1		
28	940600500008		Washer	4		
29	910200200097	1	Screw	4		
30	910400500008	1	Spring Washer	2		
31	940200300001		Compound Roller	4		
32	534744520015		Subplate	2		
33	950600300001		Safety Valve	2		
34	910200200015	1	Screw	2		
35	534444010024	2	Chain	1		2900
35	534444010026	2	Chain	1		3200
35	534444010025	2	Chain	1		3600
36	941100800006	1	Pin	2		
37	941300100007		Chain Bolt	2		
38	910600600015	1	Cotter Pin	2		
39	910600600023	1	Cotter Pin	2		
40	910300200008	1	Nut	4		

Chapter 5: Steering System, Braking System, Wheels

01 Tiller Unit (504446011001)

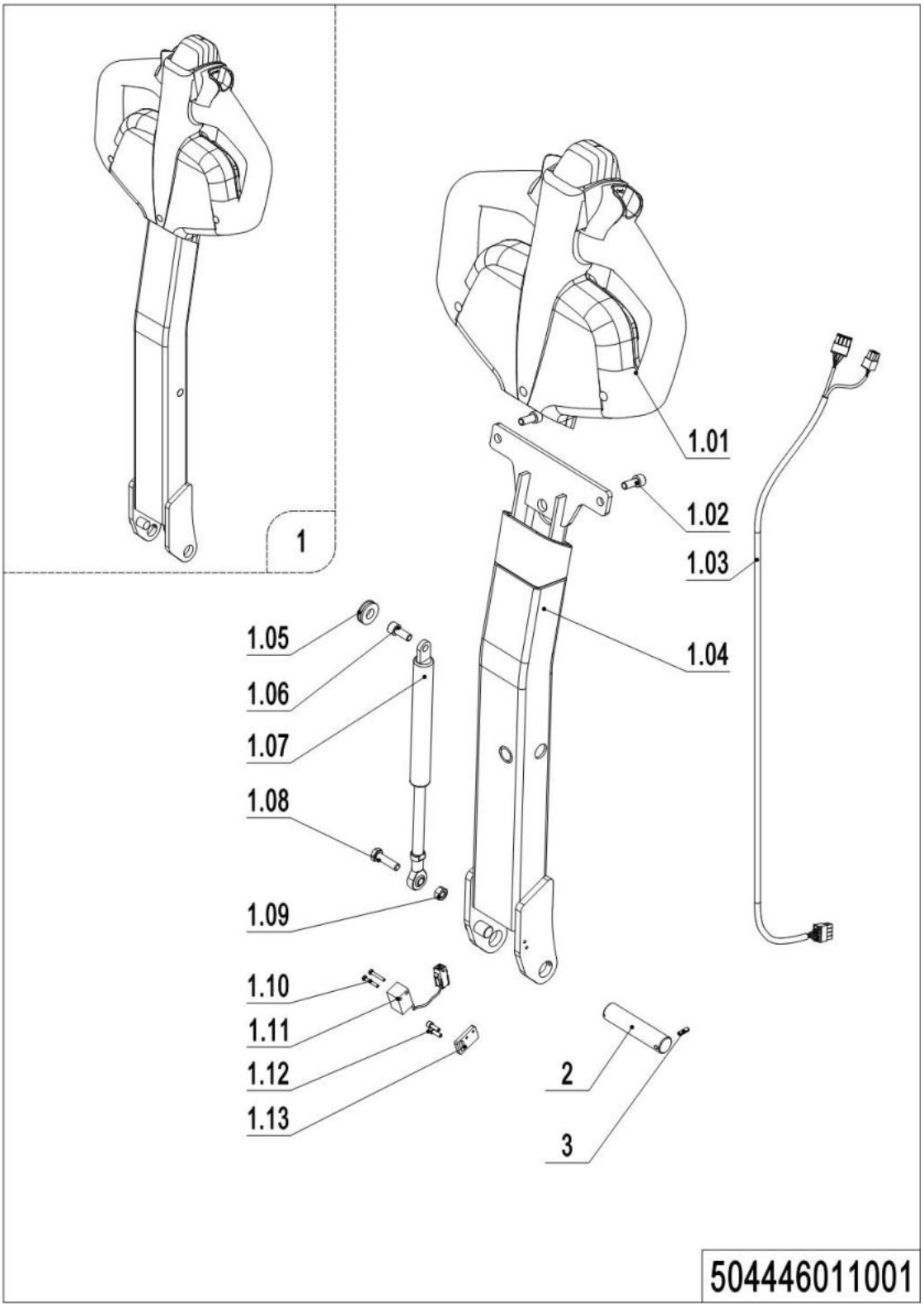

01 Tiller Unit (504446011001)

No.	Item Code	Mark	Item Description	Qty.	Substitute	Note
1	504498510027		Tiller Assembly	1		
1.01	----------		Tiller	1		Check505646010002
1.02	910200200057	1	Screw	2		
1.03	534733010001	2	Wire Harness	1		
1.04	504411010001	2	Tiller	1		
1.05	502311020009		Close Plate	1		
1.06	941100400001	1	Screw	1		
1.07	940400100011		Air Spring	1		
1.08	910100300024	1	Bolt	1		
1.09	910300100006	1	Nut	1		
1.10	910200500015	1	Screw	2		
1.11	505633510002		Proximity Switch	1		
1.12	910200200014	1	Screw	2		
1.13	504411020009		Baseboard	1		
2	504411020011		Axle	1		
3	910600400009	1	Spring Pin	1		

02 Tiller (505646010002)

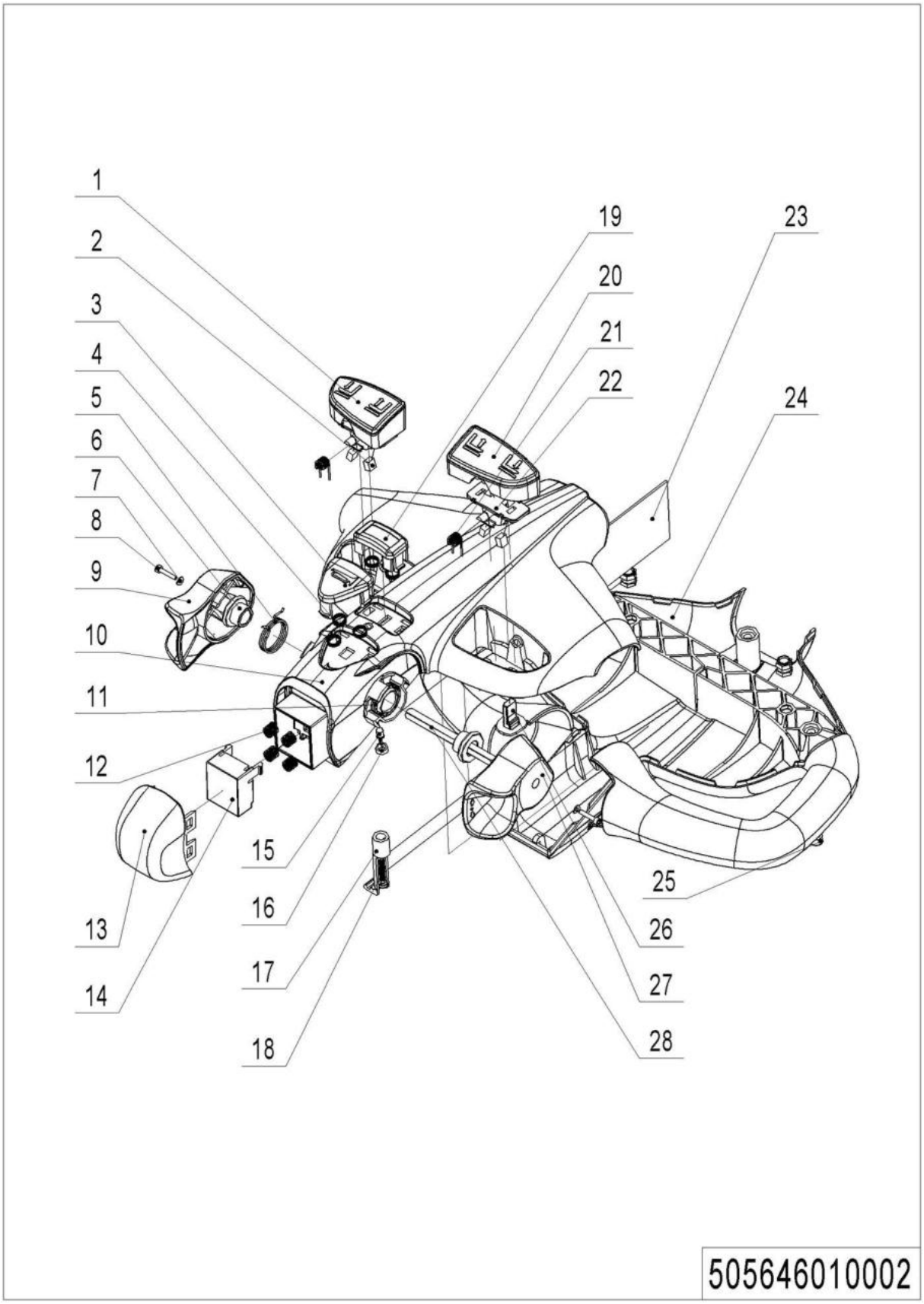

02 Tiller (505646010002)

No.	Item Code	Mark	Item Description	Qty.	Substitute	Note
--	922100100001		Tiller	1		
1	505698520016	2	Button cap	1		
2	505698520005	2	Magnet	4		
3	505698520002	2	Horn Button	1		
4	505698520003	2	Spring	5		
5	505698520027	2	Torsional Spring	1		
6	505698520004	2	Sleeve	2		
7	505698520009	2	Washer	2		
8	505698520008	2	Screw	2		
9	505698520001	2	Traction lever	1		
10	505698520014	2	Handle Cap	1		
11	505698520026	2	Torsional Spring	1		
12	505698520006	2	Spring	4		
13	505698520020	2	Button Cap-	1		
14	505698520019	2	Pedestal	1		
15	505698520024	2	Light	1		
16	505698520025	2	Lamp Holder	1		
17	505698520012	2	Clamp	1		
18	505698520023	2	Screw	1		
19	505698520021	2	Button Cap	1		
20	505698520022	2	Button Cap	1		
21	505698520018	2	Torsional Spring	2		
22	505698520017	2	Fixing Base	2		
23	505698520028	2	circuit Board	1		
24	505698520015	2	Handle Cap	1		
25	505698520007	2	Screw	3		
26	505698520013	2	Sensor	2		
27	505698520010	2	Traction lever	1		
28	505698520011	2	Axle-Traction lever	1		

03 Load Wheel (534746017002)

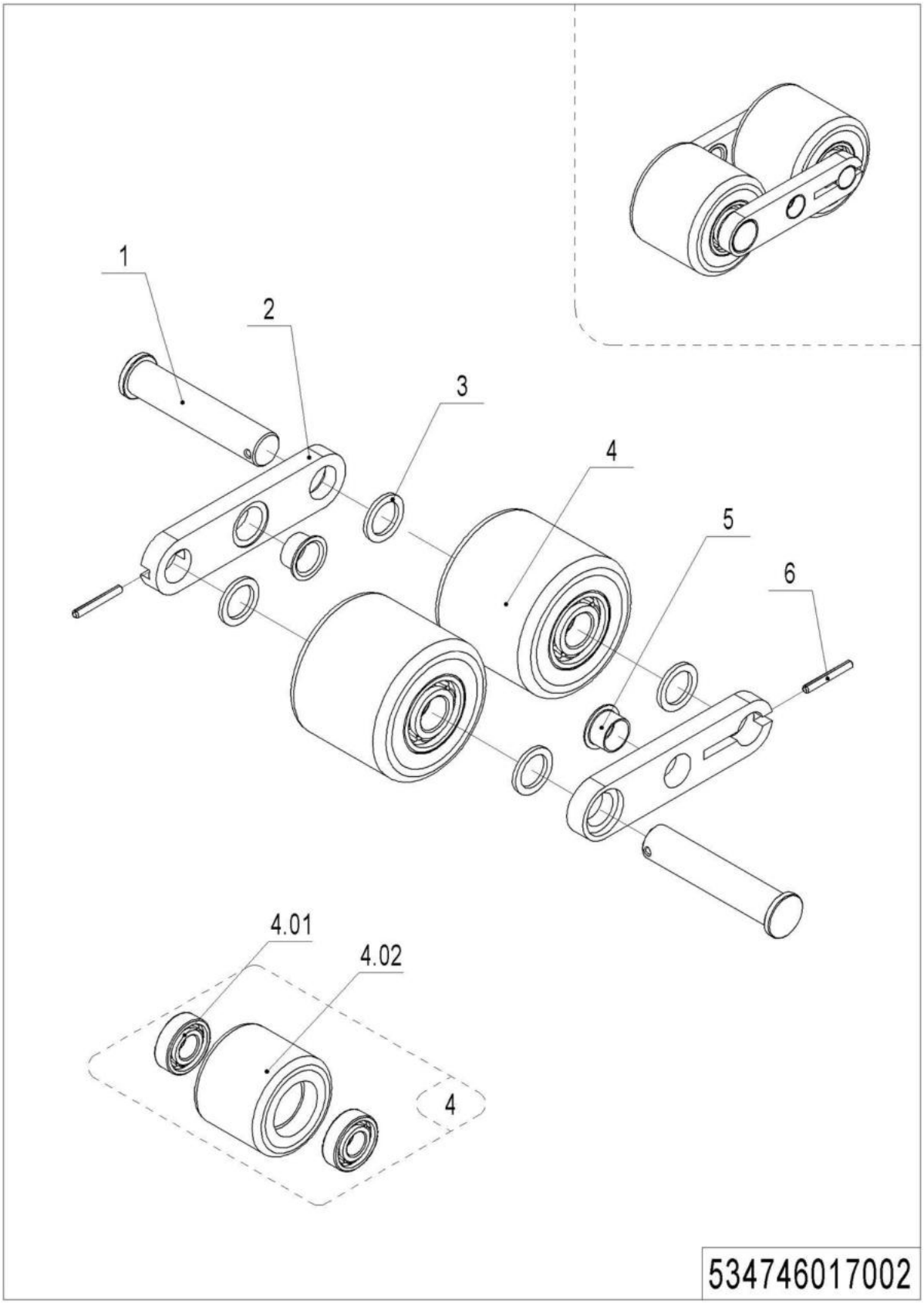

03 Load Wheel (534746017002)

No.	Item Code	Mark	Item Description	Qty.	Substitute	Note
1	534717020001		Pin	2		
2	534717020002	2	Plate	2		
3	940600500004		Washer	4		
4	532998510001		Wheel	2		
4.01	910700200019		Bearing	4		
4.02	940300300009		WheelΦ84x70	2		
5	940500200003	1	Bushing	2		
6	910600400017	1	Spring Pin	2		

04 Caster (505646016501)

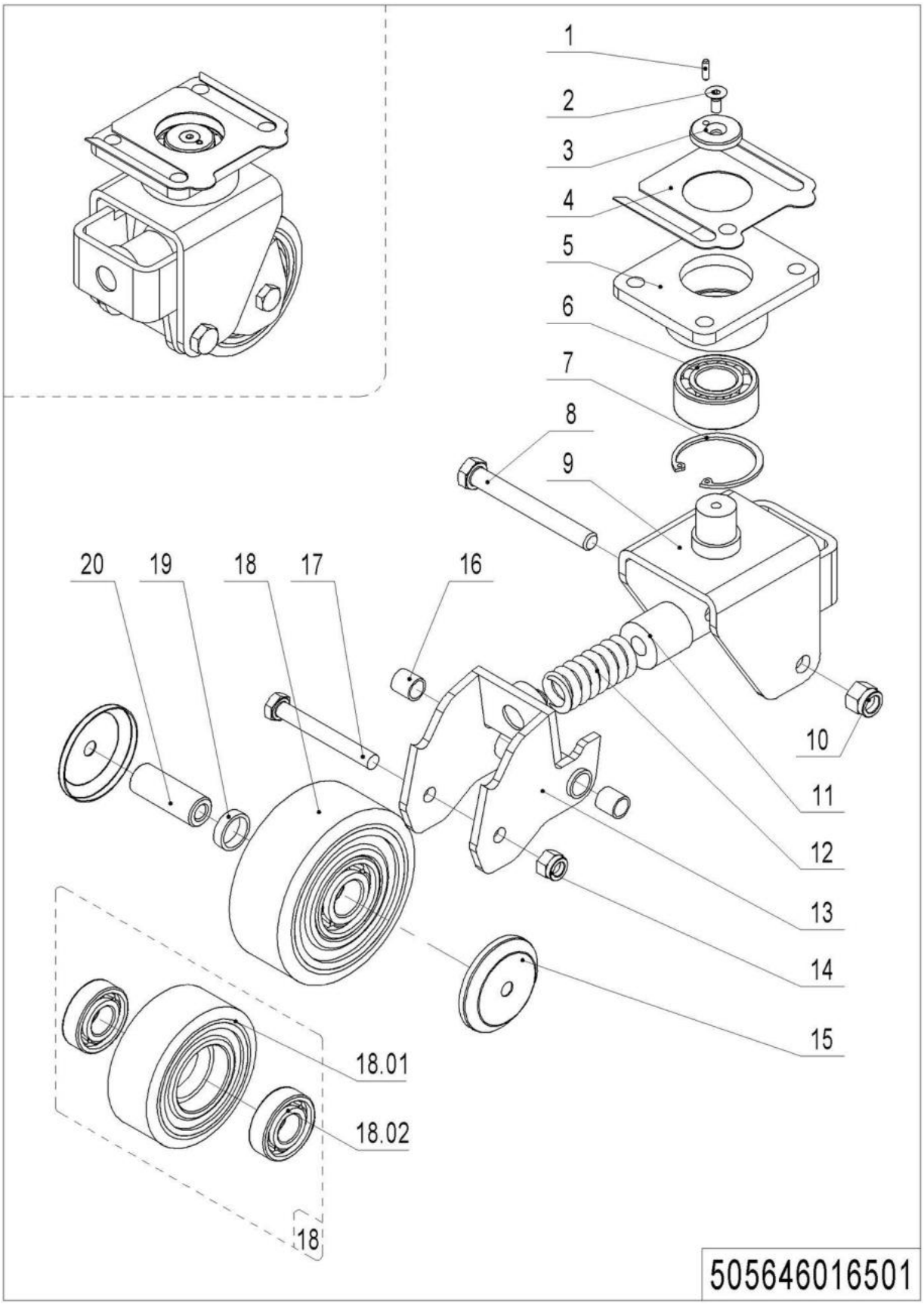

04 Caster (505646016501)

No.	Item Code	Mark	Item Description	Qty.	Substitute	Note
--	505616510000		Caster Assembly	2		
1	910600100004	1	Cylindrical Pin	1		
2	941100300001	1	Screw	1		
3	505616520007	1	Retaining Ring	1		
4	505616520014		Pad	1		
5	505616510002	2	Plate	1		
6	910700500002		Bearing	1		
7	910401400016	1	Circlip	1		
8	941100200002	1	Bolt	1		
9	505616510001	2	Wheel Carrier	1		
10	910300500006	1	Nut	1		
11	505616520000	2	Spring	1		
12	940400500007	2	Spring	1		
13	505616510003	2	Whirling Arm	1		
14	910300500005	1	Nut	1		
15	505616520011		Dust Cap	2		
16	940500100002	1	Bushing	2		
17	910100100038	1	Bolt	1		
18	505698510000		Wheel	1		
18.01	940300300018		WheelΦ100x40	1		
18.02	910700200019		Bearing	2		
19	505616520012		Check Ring	2		
20	505616520013		Bushing	1		

Chapter 6: Electrical Parts

01Wire Harness (534546033001)

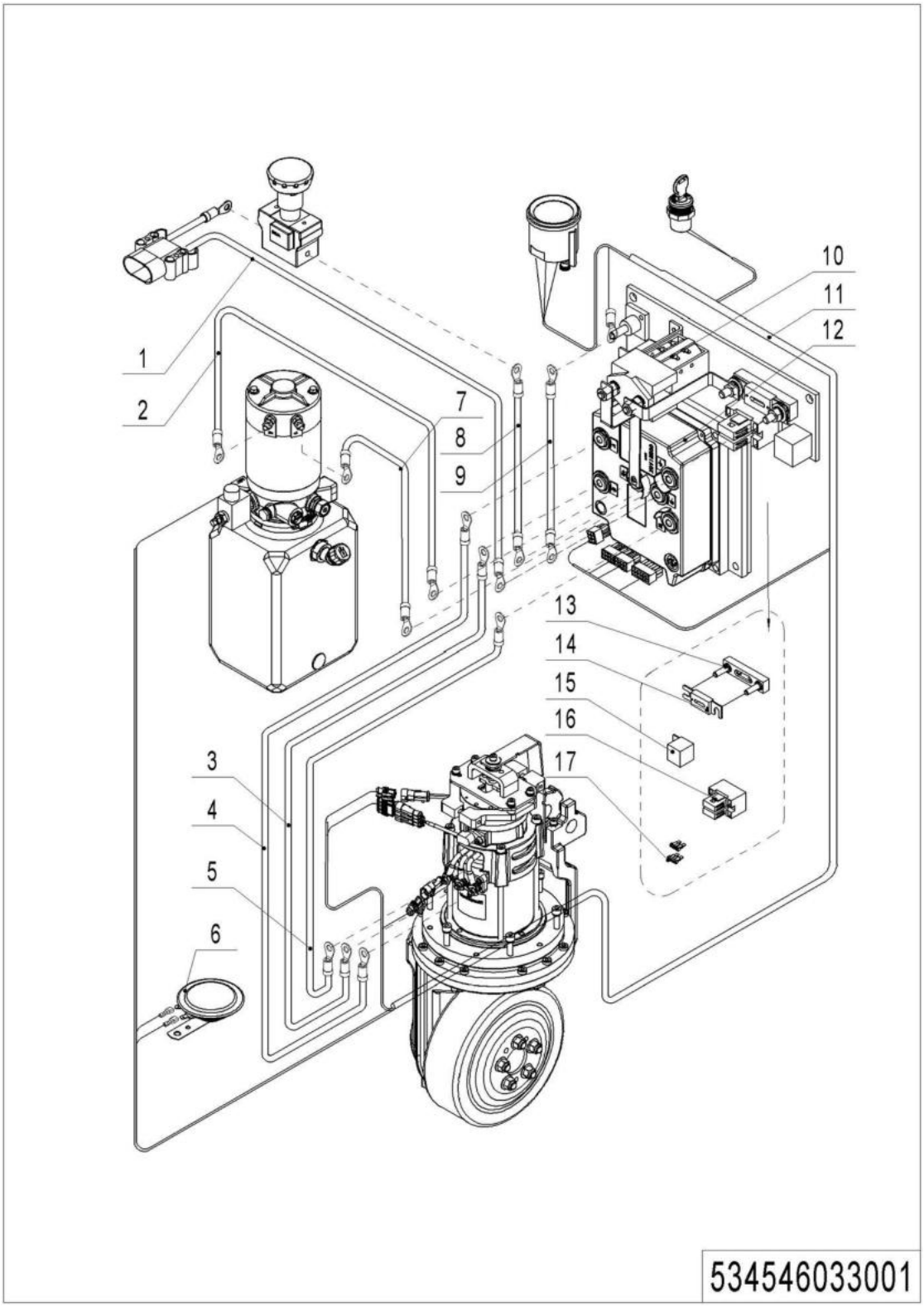

01 Wire Harness (534546033001)

No.	Item Code	Mark	Item Description	Qty.	Substitute	Note
1	534833010008	2	Wire Harness	1		
1	534533010002	2	Wire Harness	1		Li
2	534533010007	2	Cable	1		
3	534833010003	2	Cable	1		
4	534833010004	2	Cable	1		
5	534833010005	2	Cable	1		
6	920500100001		Horn	1		
7	534533010006	2	Cable	1		
8	534833010009	2	Cable	1		
9	534833010013	2	Cables	1		
10	920700100002		Contactor	1		
11	534533010000	2	Wire Harness	1		
11	534533010001	2	Wire Harness	1		Li
12	921400100048		Controller	1		
13	920100400002		Fuse Holder	1		
14	920100100013		Fuse	1		
15	920800100001		Relay	1		
16	920100400005		Fuse Holder	1		
17	920100200002		Fuse	2		

02 Charger (534546036501)

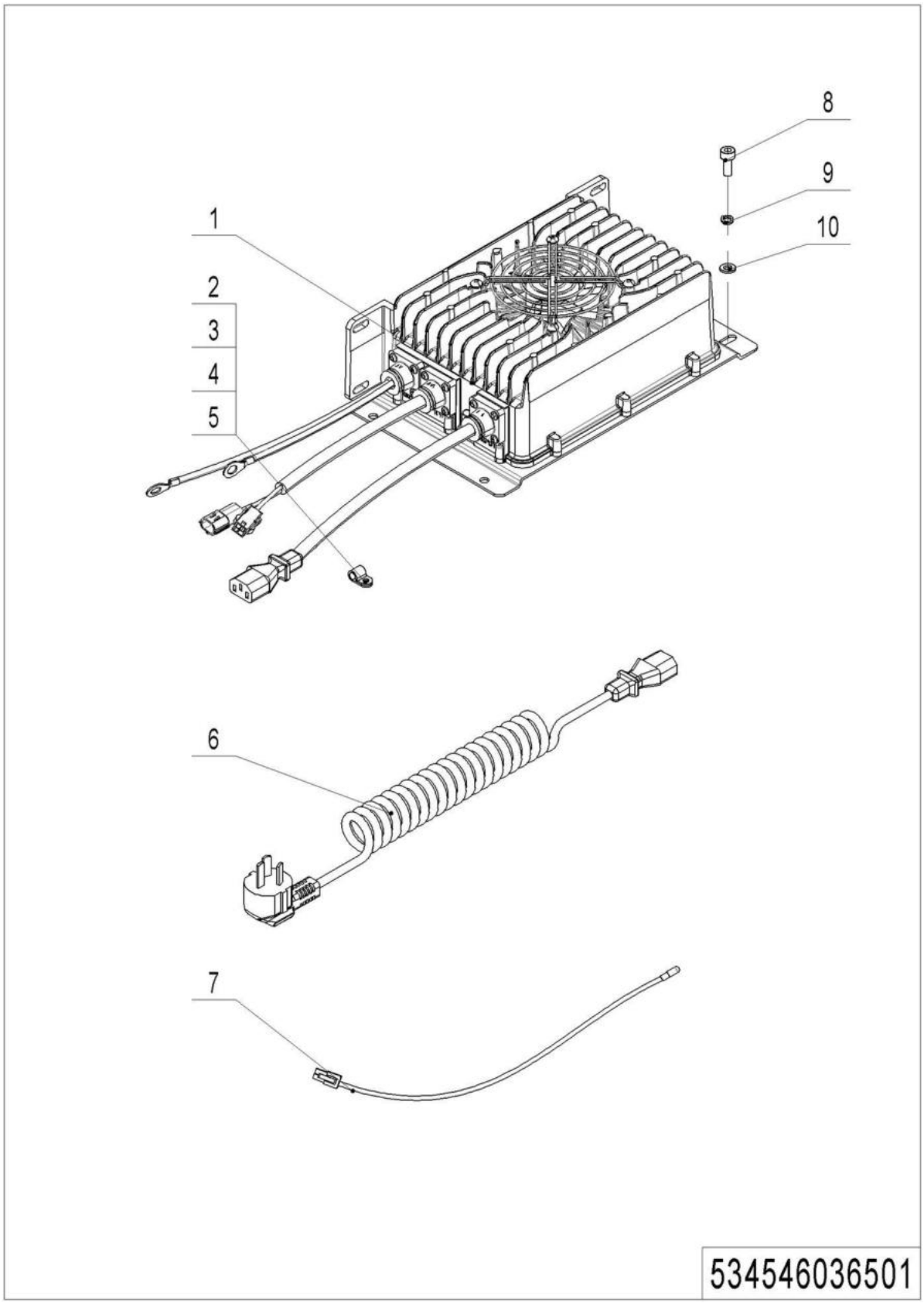

1= Supply as package. 2= Supply with constraints. 3= Phasing-out supply. 4= Supply as assembly. 5= Check other tables.

02 Charger (534546036501)

No.	Item Code	Mark	Item Description	Qty.	Substitute	Note
1	921000100045		Charger24V25A	1		
2	921300200001	1	Cable Clamp	4		
3	910200500034	1	Screw	4		
4	910400100003	1	Flat Washer	4		
5	910400500003	1	Spring Washer	4		
6	921500200031		Spring Cable(USA)	1		
6	921500200008		Spring Cable（Asia）	1		
6	921500200005		Spring Cable(EU)	1		
6	921500200003		Spring Cable(AUS)	1		
6	921500200004		Spring Cable(ENG)	1		
7	922000100020		Lamp	1		
8	910200200033	1	Screw	4		
9	910400500005	1	Spring Washer	4		
10	910400100005	1	Flat Washer	4		

03 Charger(Li) (534546036502)

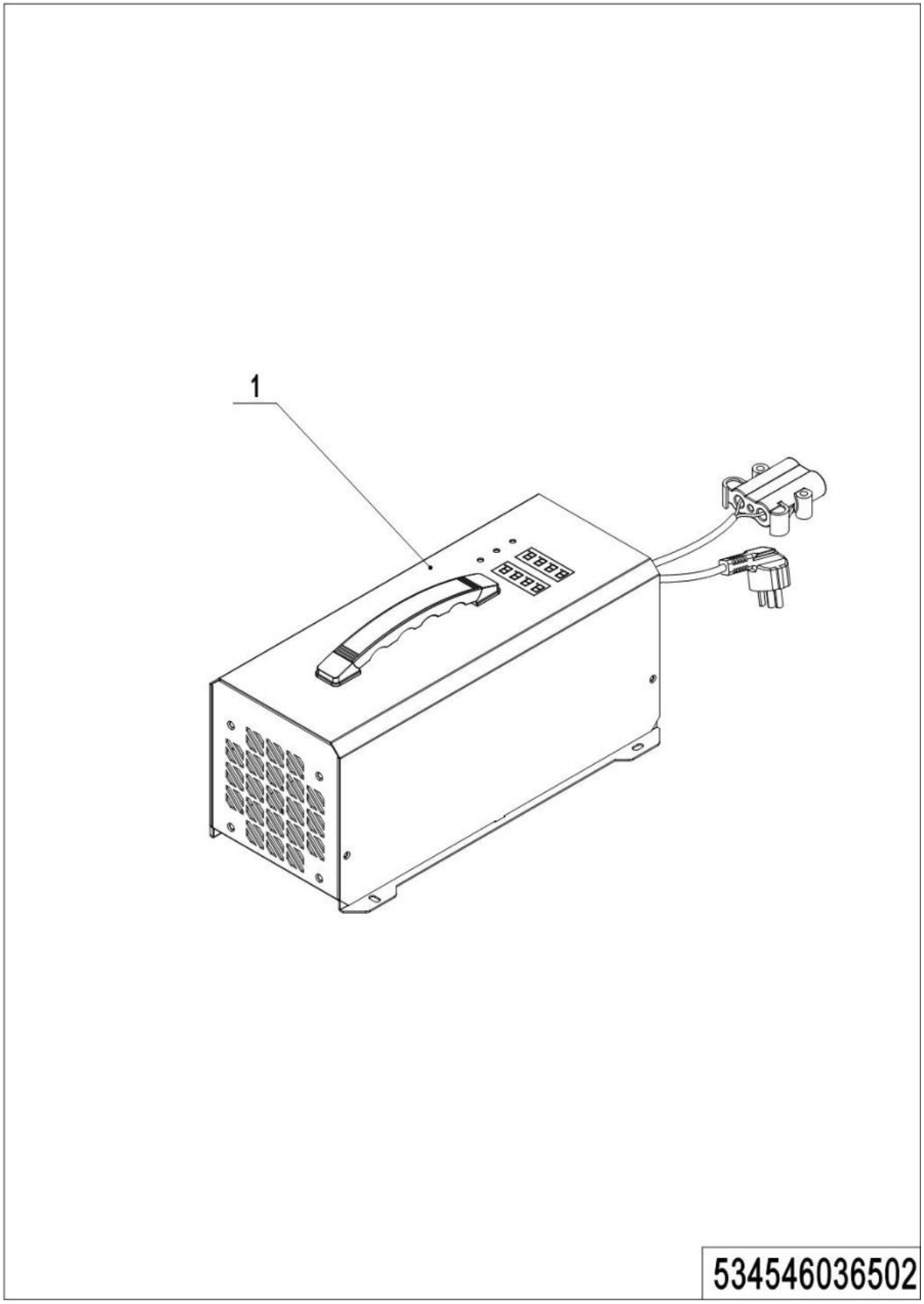

1= Supply as package. 2= Supply with constraints. 3= Phasing-out supply. 4= Supply as assembly. 5= Check other tables.

03 Charger(Li) (534546036502)

No.	Item Code	Mark	Item Description	Qty.	Substitute	Note
1	921000200649		Charger24V60A(Asia)	1		
1	921000200524		Charger24V60A(EU)	1		
1	921000200525		Charger24V60A(ENG)	1		
1	921000200526		Charger24V60A(AUS)	1		
1	921000200527		Charger24V60A((ISR)	1		
1	921000200528		Charger24V60A(ARG)	1		
1	921000200529		Charger24V60A(ZA)	1		

04 Traction Battery (534446037001)

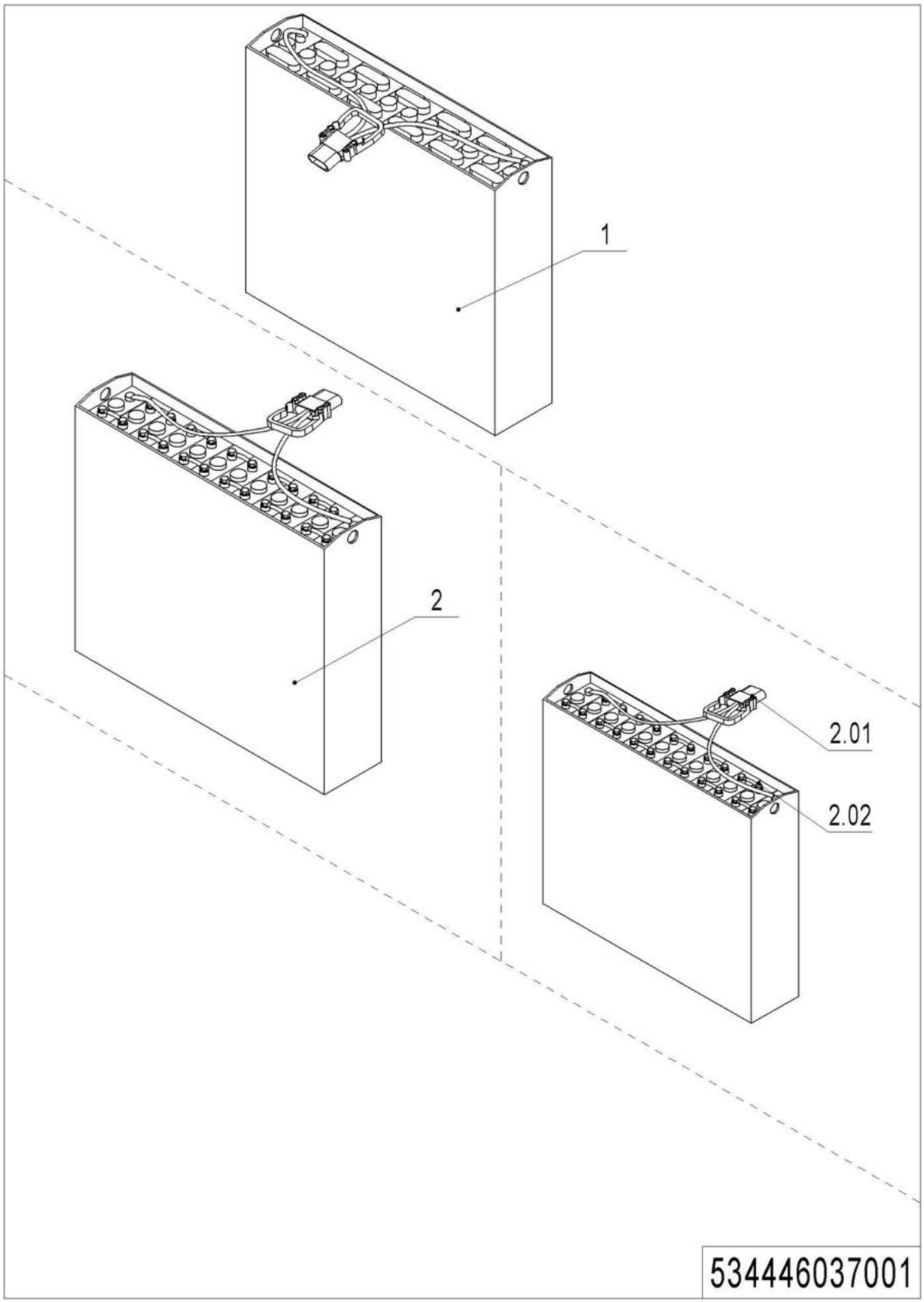

1= Supply as package. 2= Supply with constraints. 3= Phasing-out supply. 4= Supply as assembly. 5= Check other tables.

04 Traction Battery (534446037001)

No.	Item Code	Mark	Item Description	Qty.	Substitute	Note
1	534437010000		Battery24V180Ah(welded)	1		
1	534437010001		Battery24V180Ah	1		
2.01	920400100007		Connector	1		General Use
2.02	505698520000		Bolt	24		Bolted Only

05 Traction Battery (Li) (534546037001)

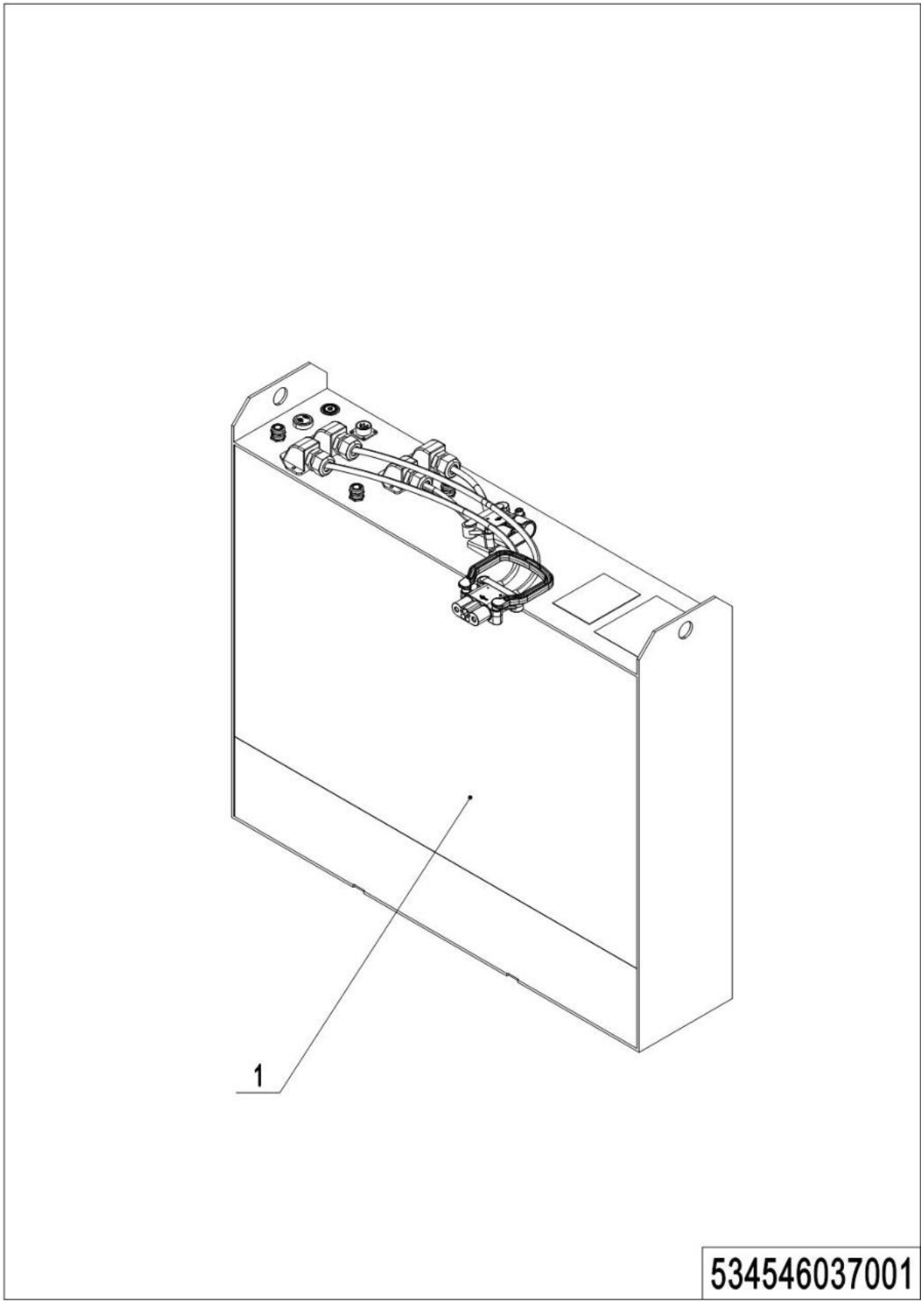

1= Supply as package. 2= Supply with constraints. 3= Phasing-out supply. 4= Supply as assembly. 5= Check other tables.

05 Traction Battery(Li) (534546037001)

No.	Item Code	Mark	Item Description	Qty.	Substitute	Note
1	920600100304	2	Li Battery24V100Ah	1		
2	920600100306	2	Li Battery24V150Ah	1		

06 Display Assembly (534846010001)

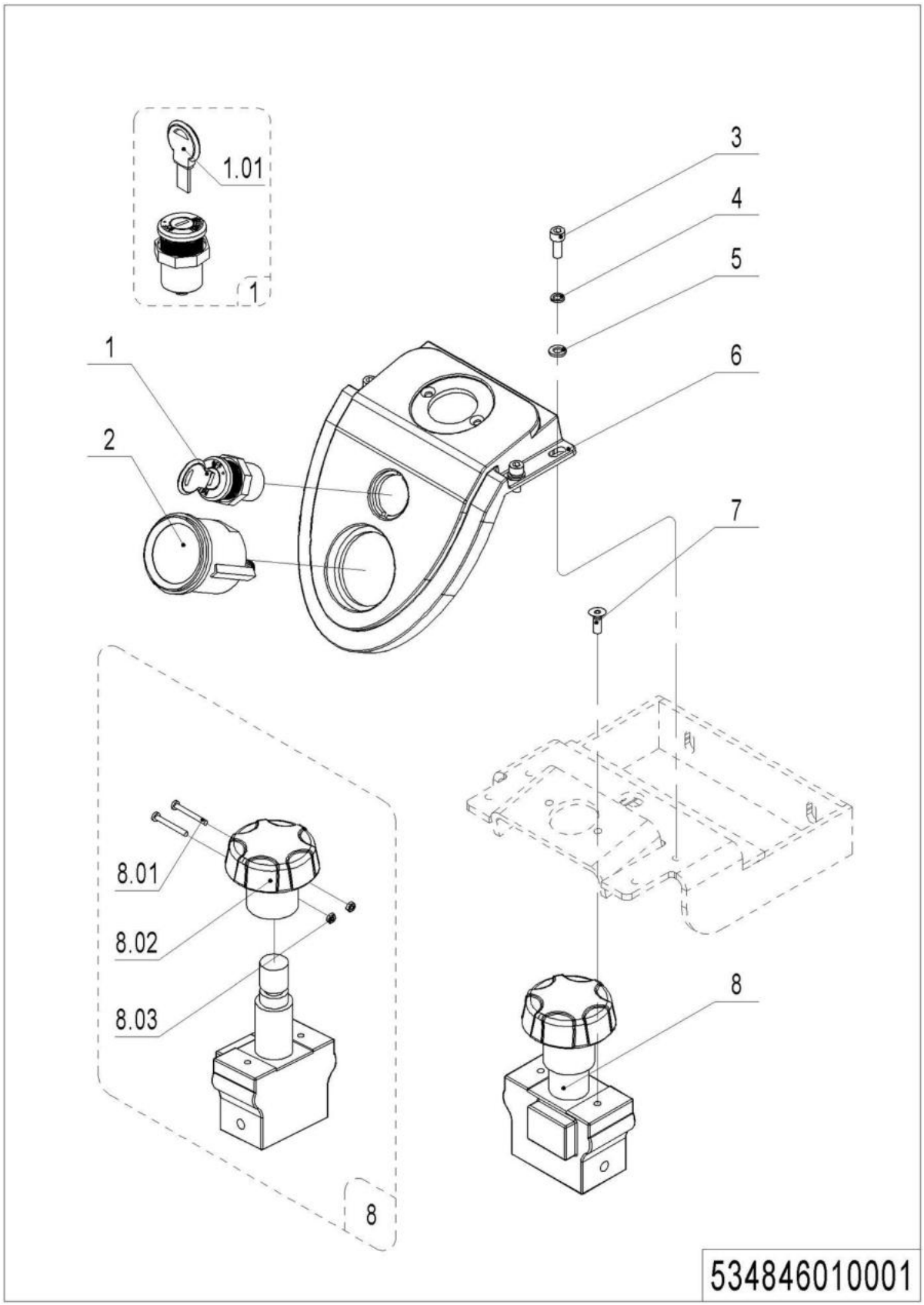

06 Display Assembly (534846010001)

No.	Item Code	Mark	Item Description	Qty.	Substitute	Note
1	920200200025		Key Switch	1		
1	920200200028		Key Switch	1		Li
1.01	403898520003		Key	1		
2	921100100012		Display	1		
3	910200200035	1	Screw	4		
4	910400500005	1	Spring Washer	4		
5	910400100005	1	Flat Washer	4		
6	504410020001	2	Protective Cover	1		
7	910200400011	1	Screw	2		
8	920200100001		Emergency Button	1		
8.01	910200500016	1	Screw	2		
8.02	505698520029		Button	1		
8.03	910300100002	1	Nut	2		

Chapter 7: Special Parts

01 Load Backrest (Optional) (534846040501)

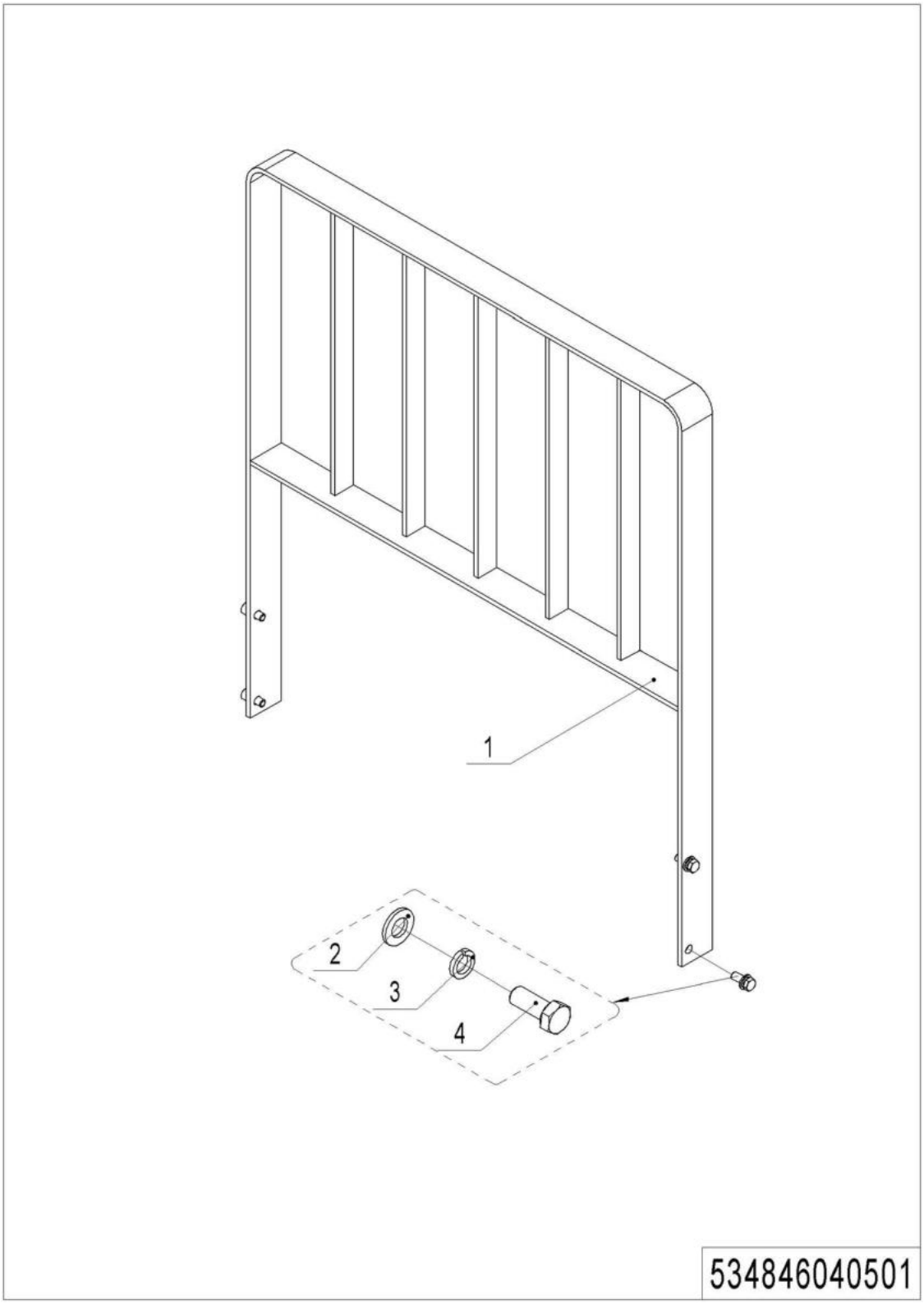

01 Load Backrest (Optional) (534846040501)

No.	Item Code	Mark	Item Description	Qty.	Substitute	Note
1	534840510000	2	Load Backrest	1		
2	910400100007	1	Flat Washer	4		
3	910400500007	1	Spring Washer	4		
4	910100300037	1	Bolt	4		

Chapter 8: Others

01 Label and Decal (EU) (534546047001)

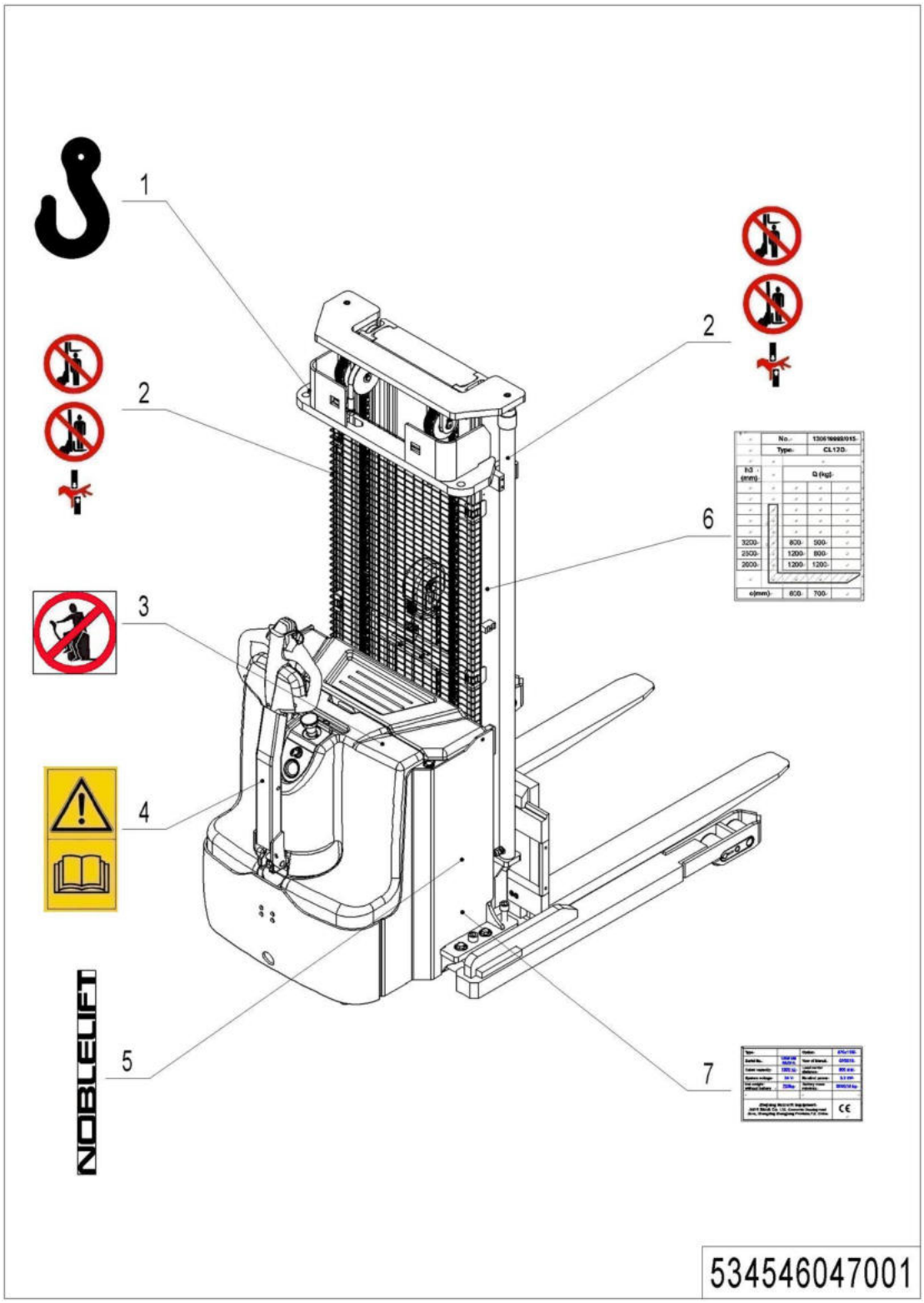

01 Label and Decal (EU) (534846047001)

No.	Item Code	Mark	Item Description	Qty.	Substitute	Note
1	941200300001		Label	2		
2	941200100004		Label	2		
3	941200100003		Label	1		
4	941200300002		Label	1		
5	941200500001		Label	2		Depends On Customer
6	534547502002		Load Capacity Diagram	2		
7	534547502001		Truck data plate	1		

02 Label and Decal (USA) (534546047002)

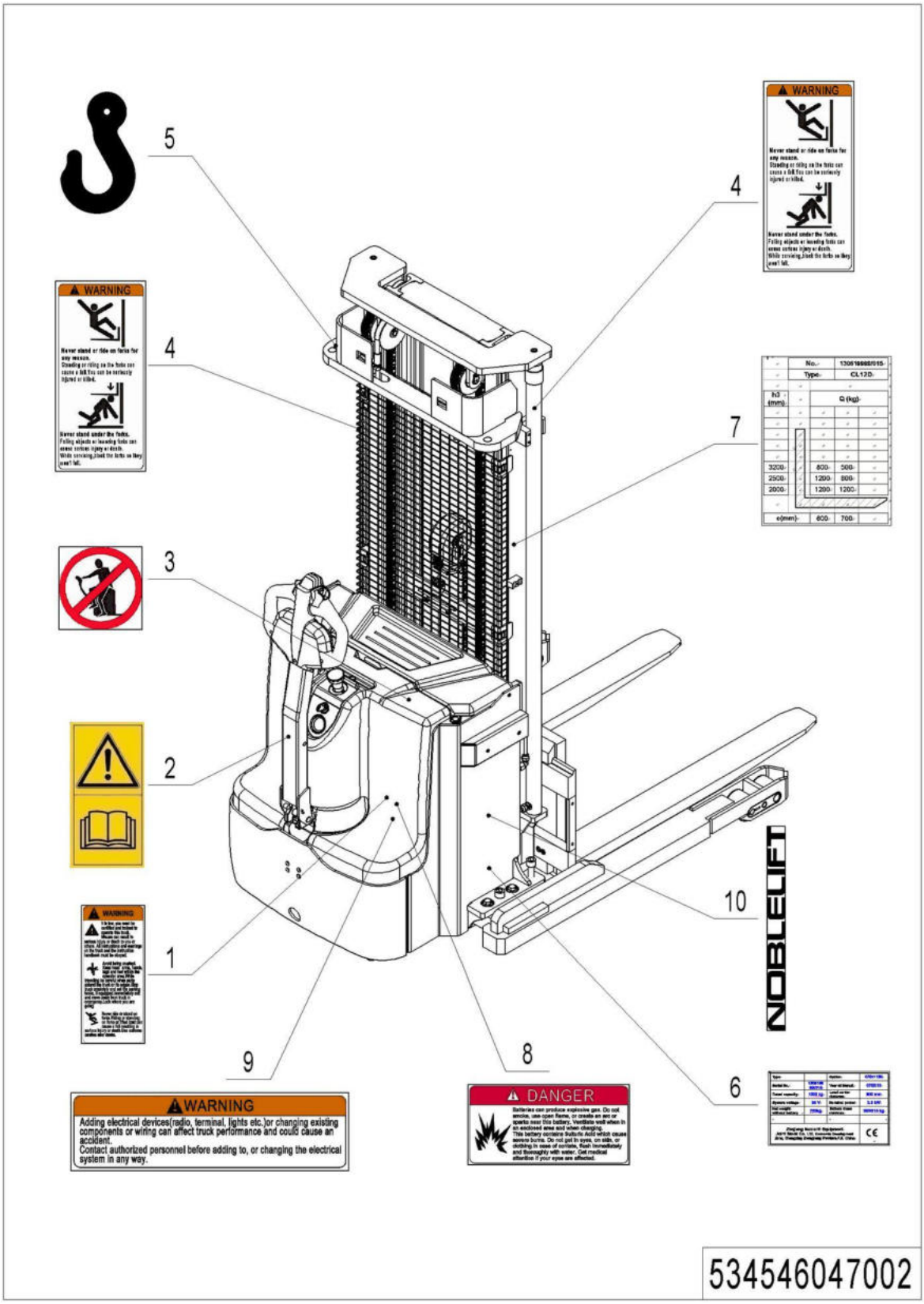

1= Supply as package. 2= Supply with constraints. 3= Phasing-out supply. 4= Supply as assembly. 5= Check other tables.

02 Label and Decal (USA) (534846047002)

No.	Item Code	Mar.	Item Description	Qty.	Substitute	Note
1	941200100009		Label	1		
2	941200300002		Label	1		
3	941200100003		Label	1		
4	941200100016		Label	1		
5	941200300001		Label	2		
6	534547502001		Truck data plate	1		
7	534547502002		Load Capacity Diagram	2		
8	941200100013		Label	1		
9	941200100010		Label	1		
10	941200500001		Label	2		Depends On Customer

Appendix

01 Electrical Circuit Diagram (534846045501)

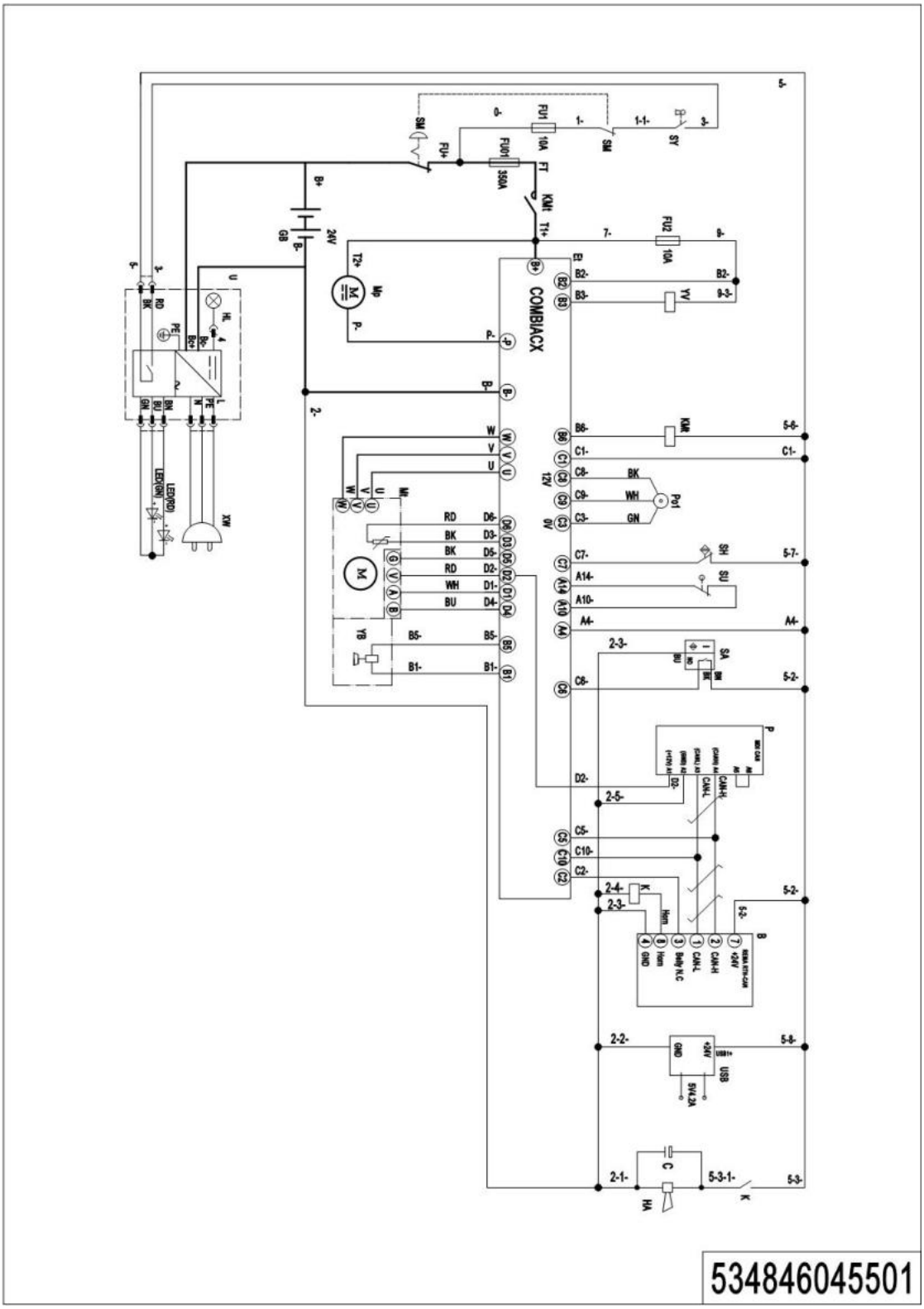

02 Electrical Circuit Diagram (Li) (534846045503)

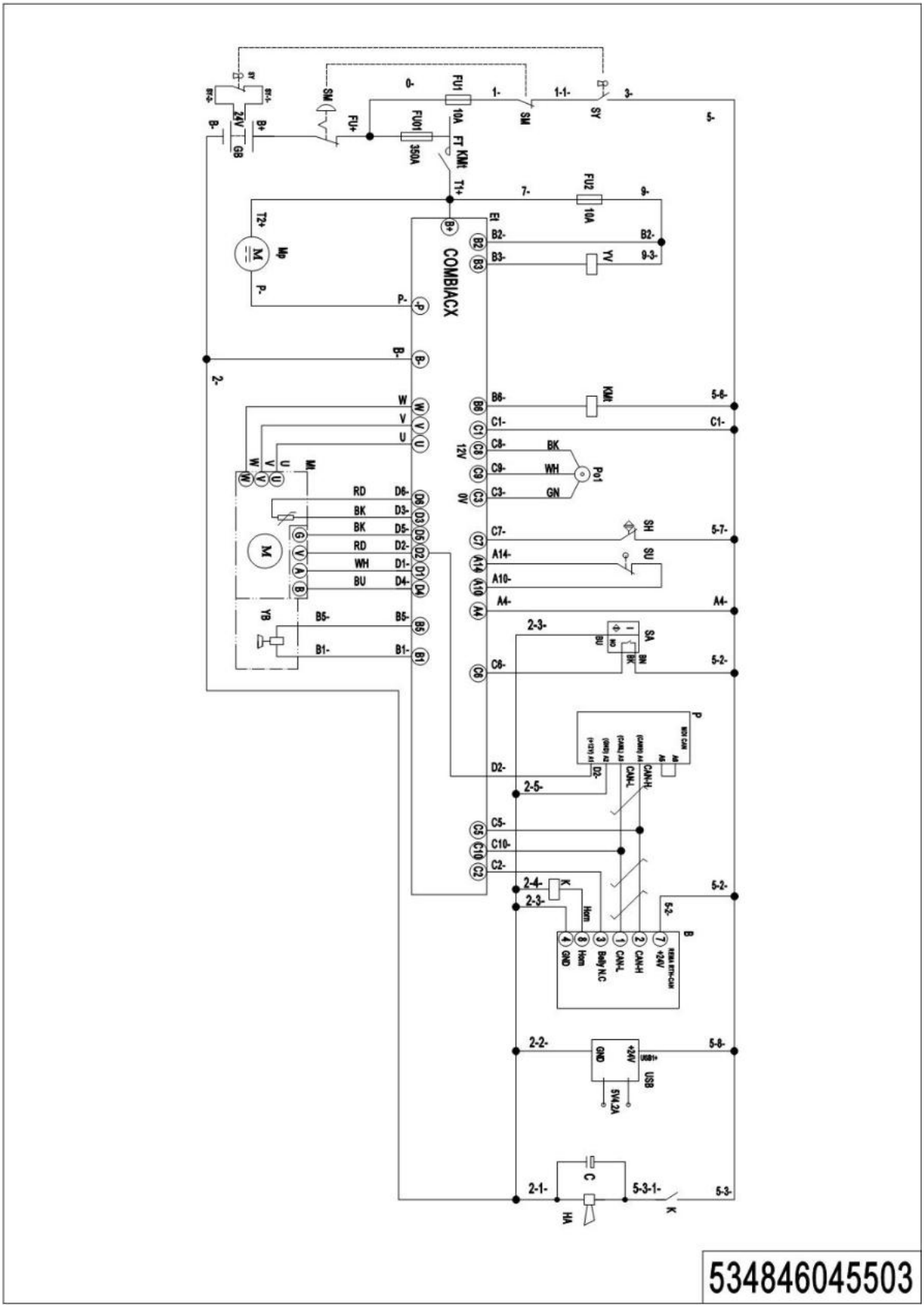

03 Hydraulic Circuit Diagram (534546045502)

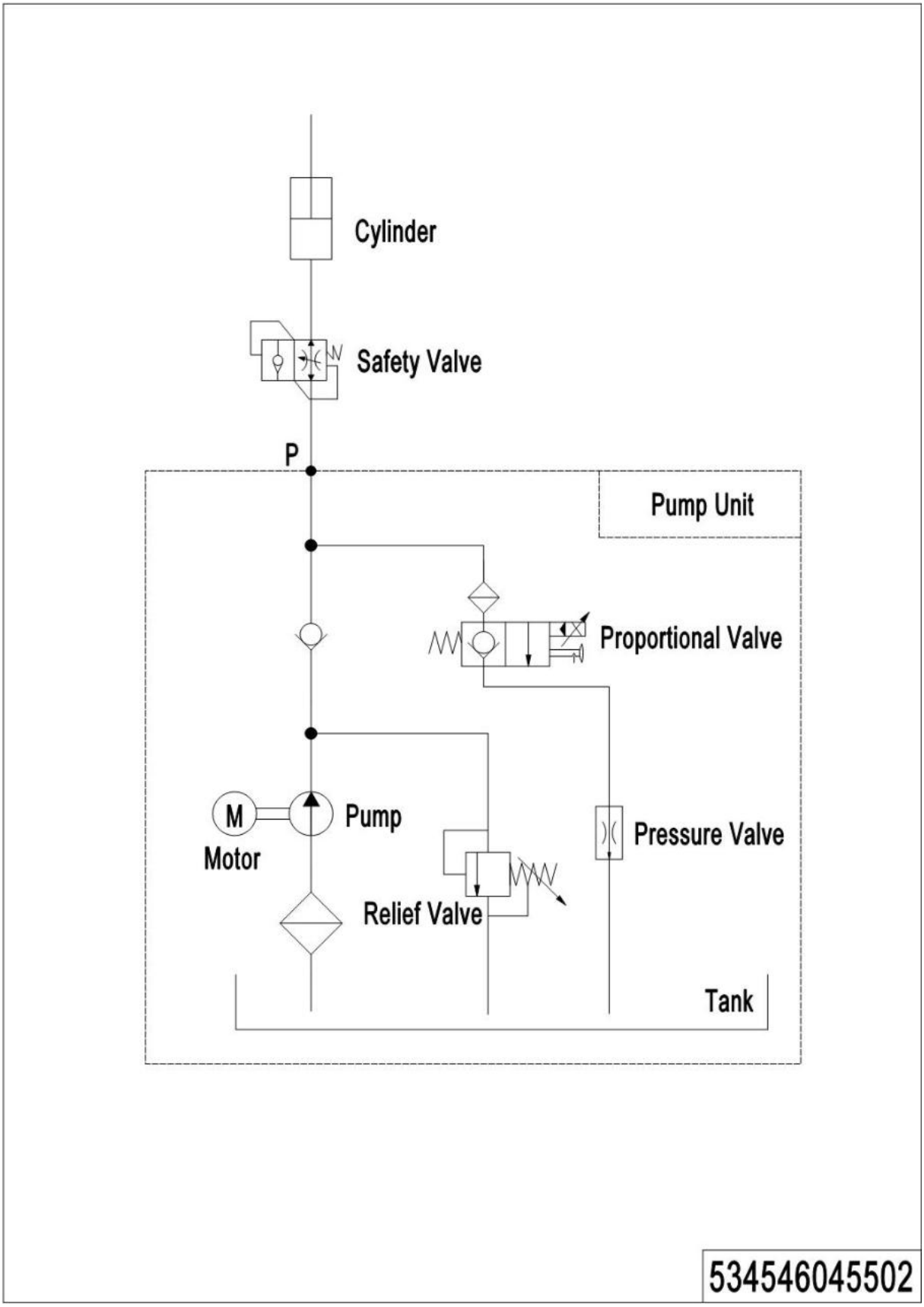

04 Consumable Parts List

No.	Item Code	Item Description	Qty.	Chapter/ Section/ Number
1	534498510008	Carbon Brush	2	Chapter 2/02/02
2	534498510000	Seal Kit	2	Chapter 4/01/18.01
3	534498510001	Seal Kit	1	Chapter 4/01/44.01
4	534498510002	Seal Kit	2	Chapter 4/02/16.01
5	940400100011	Air Spring	1	Chapter 5/01/9
6	910700200019	Bearing	12	Chapter 5/03/4.01 Chapter 5/04/18.02
7	940300300009	WheelΦ84x70	4	Chapter 5/03/4.02
8	910700500002	Bearing	2	Chapter 5/04/6
9	940300300018	WheelΦ100x40	2	Chapter 5/04/18.01
10	920100100013	Fuse	1	Chapter 6/01/14
11	920100200002	Fuse	2	Chapter 6/01/17