Print Number: Print Date:

NOBLELIFT

Scan QR Code for More

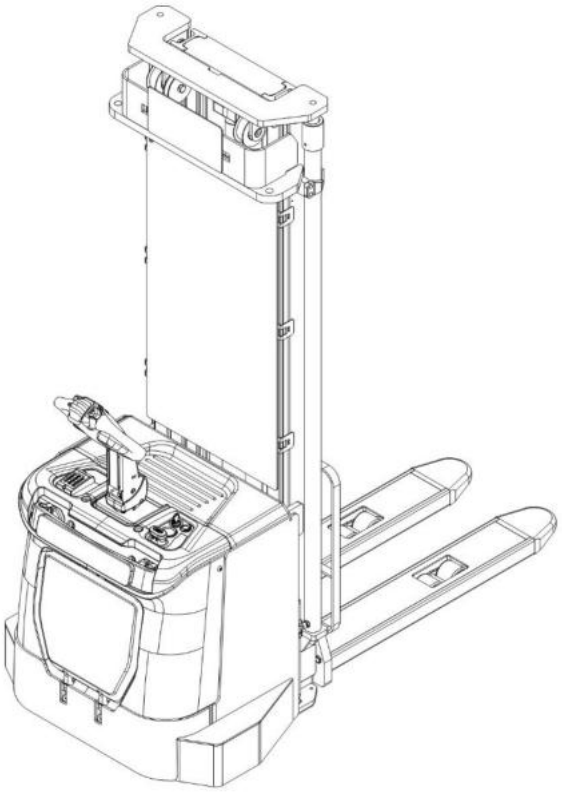

Electric Pallet Stacker PS16NW

PARTS MANUAL

537846020101

Version V05

Truck Identification Number From:

Parts Manual

PS16NW-PM05EN

Please order parts from authorized dealers of Noblelift Intelligent Equipment Co., LTD. In order to avoid wrong delivery, all the orders for spare parts should specify the following items:

- Truck model, identification number and manufacture year.
- Orders for spare parts of mast, hydraulic transmission unit, steering axle, motor, etc. shall indicate the manufacture number of these parts.
- Codes for Noblelift spare parts are shown in the table of parts manual. Please also pay attention to the description of supply status, order quantity, etc. (check the number listed in "Mark" column of the parts manual).

"Mark" Column:

The unmarked indicates the parts are in short supply cycle.

Number 1: supply as package. Indicating these that parts are small parts and seal parts, which are supplied in package unit and in short supply cycle.

Number 2: supply with constraints. Indicating that these spare parts are not in stock and will be prepared for production after receiving the order from customers, which are in long supply cycle.

Number 3: phasing-out supply. Indicating that these parts will be replaced by new parts due to technical improvements and the current stock will not be available when these parts run out. Please check the description of technical improvements notice.

Number 4: supply as assembly. Indicating that these parts are assembly parts defined by manufacture process, which cannot be supplied as a single part.

Number 5: check other tables.

This parts manual is the property of Noblelift and can be shared under the confidential agreement only, Noblelift has the right to claim for compensation of any unauthorized use. Copy without permission is not allowed. Figures in the manual are not limited by the original design. Noblelift Intelligent Equipment Co., LTD reserves the right to improve the products for continuous technology progress.

Table of Contents

Chapter 1: Drive system 5
01 Drive unit (manual steering) (537846013501) 5
01 Drive unit (manual steering) (537846013501) continuation 7
02 Drive assembly 1.4kW (535946013502) 9
03 Drive assembly (EPS) (537846013502) 11
03 Drive assembly (EPS) (537846013502) continuation 13
04 Drive steering assembly 1.4kW (535946013504) 15
Chapter 2: Hydraulic system 17
01 Hydraulic circuit (FFL, TX) (537846024001) 17
02 Hydraulic circuit (standard, TX) (537846024002) 19
03 Hydraulic circuit (DX) (537846024003) 21
04 Pump unit (HPI, 3.2KW) (534746023501) 23
05 Pump unit (VIBO,3.0KW) (537846023501) 25
06 Pump Unit (VIBO,3.2KW)(534746023502) 27
Chapter 3: Truck structure 29
01 Truck frame (537846021501) 29
01 Truck frame (537846021501) continuation 31
02 Truck frame(Sideways Exchange)(537846021502) 33
02 Truck frame(Sideways Exchange)(537846021502) continuation 35
03 Protective arm (535946017501) 37
04 Platform (535946018001) 39
05 Fork carriage (534746038001) 41
Chapter 4: Mast system 43
01 Two stage mast (standard) (537846044001) 43
01 Two stage mast (standard) (537846044001) continuation 45
02 Two stage mast (FFL) (537846043501) 47
02 Two stage mast (FFL) (537846043501) continuation 1 49
02 Two stage mast (FFL) (537846043501) continuation 2 51
03 Three stage mast (standard) (537846045001) 53
03 Three stage mast (standard) (537846045001) continuation 55
04 Three stage mast (FFL) (537846044501) 57
04 Three stage mast (FFL) (537846044501) continuation 1 59
04 Three stage mast (FFL) (537846044501) continuation 2 61
04 Three stage mast (FFL) (537846044501) continuation 3 63
Chapter 5: Steering system, braking system and wheels 65
01 Tiller (535946011001) 65
02 Tiller (535946011002) 67
03 Tiller (EN1175-2020)(535946011010) 69
04 Load wheel (532946017001) 71
05 Side wheel (532646016501) 73
06 Steering unit (EPS) (537846031201) 75
07 Steering unit (manual) (537846031202) 77

Chapter 6: Electrical components 79
01 Display (537846010001) 79
02 Wire harness (manual steering, ZAPI) (537846033001) 81
03 Wire harness (manual steering, QT) (537846033002) 83
04 Wire harness (EPS, ZAPI) (537846033003) 85
05 Wire harness (EPS, QT) (537846033004) 87
06 Wire harness (manual steering, EN1175-2020) (537846033009) 89
07 Wire harness (EPS, EN1175-2020) (537846033010) 91
08 Controller (manual steering, ZAPI) (537846033005) 93
09 Controller (manual steering, QT) (537846033006) 95
10 Controller (EPS, ZAPI) (537846033007) 97
11 Controller (EPS, QT) (537846033008) 99
12 Controller (manual steering, EN1175-2020) (537846033013) 101
13 Controller (EPS, EN1175-2020) (537846033014) 103
14 Charger (537846036501) 105
14 Charger (537846036501) continuation 107
15 Charger(Li) (537846036502) 109
16 Traction battery (534746037001) 111
17 Traction battery(Li) (537846037001) 113
Chapter 7: Special equipment 115
01 Load backrest (optional) (532646040501) 115
Chapter 8: Others 117
01 Labels and decals (EU) (537846047001) 117
Appendix 119
01 Electrical diagram (manual steering, ZAPI) (537846045501) 119
02 Electrical diagram (manual steering, QT) (537846045502) 120
03 Electrical diagram (EPS, ZAPI) (537846045503) 121
04 Electrical diagram (EPS, QT) (537846045504) 122
05 Electrical diagram (manual steering,ZAPI,Li) (537846045505) 123
06 Electrical diagram (manual steering,QT,Li) (537846045506) 124
07 Electrical diagram (EPS,ZAPI,Li) (537846045507) 125
08 Electrical diagram (EPS,QT,Li) (537846045508) 126
09 Electrical diagram (manual steering, EN1175-2020) (537846045509) 127
10 Electrical diagram (EPS, EN1175-2020) (537846045510) 128
11 Hydraulic diagram (535946045503) 129
12 Easy worn parts list 130
12 Easy worn parts list continuation 131

Chapter 1: Drive system

01 Drive unit (manual steering) (537846013501)

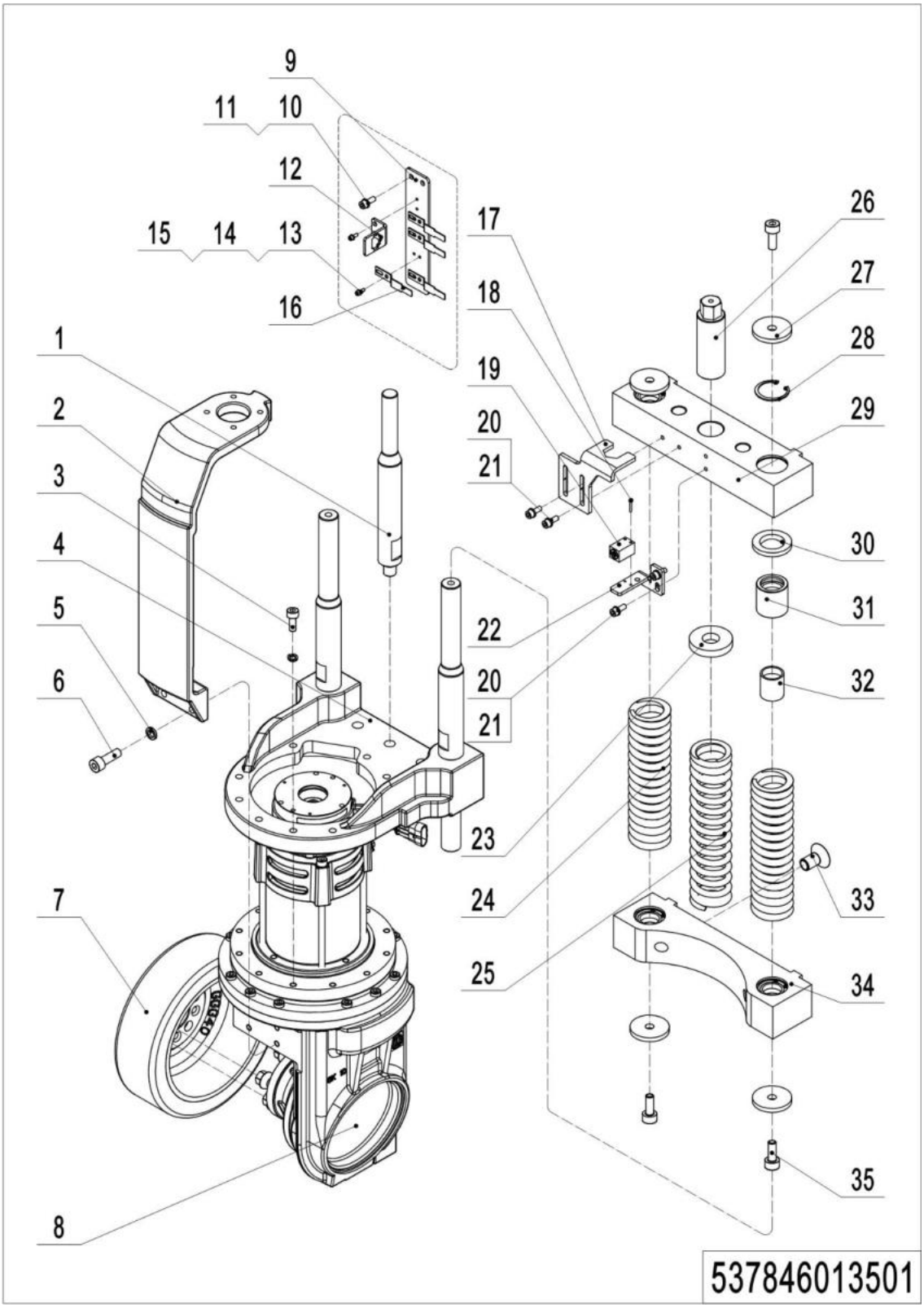

01 Drive unit (manual steering) (537846013501)

No.	Item Code	Mark	Item Description	Qty.	Substitute	Note
1	537813520015		Guide Rail	1		
2	537813520009		Bracket	1		
3	910200200059		Screw	9		
4	537898510010		Wheel Mount	1		
5	910400500006		Spring Washer	13		
6	910200200058		Screw	4		
7	940300400005		WheelΦ230x70	1		
8	----------		Drive Unit	1		**See 535946013502**
9	537813520018		Mounting Plate	1		
10	910200200035		Screw	2		
11	910400100005		Flat Washer	2		
12	921300300003		Holder	1		
13	910200500020		Screw	10		
14	910400100003		Flat Washer	10		
15	910400500003		Spring Washer	10		
16	921300300010		Connector Holder	4		
17	537813520012		Fixing Plate	1		
18	910200500015		Screw	2		
19	505633510000		Proximity Switch	1		
20	910400100005		Flat Washer	4		
21	910200200035		Screw	4		
22	537813520011		Mounting Plate	1		
23	537813520014		Washer	1		
24	537813520006		Spring	2		
25	537813520016		Spring	1		
26	537813520007		Sleeve-stop	2		
27	537813520013		Washer	4		
28	910401400014		Circlip	4		
29	537813520004		Fixing Plate	1		

1= Supply as package. 2= Supply with constraints. 3= Phasing-out supply. 4= Supply as assembly. 5= Check other tables.

01 Drive unit (manual steering) (537846013501) continuation

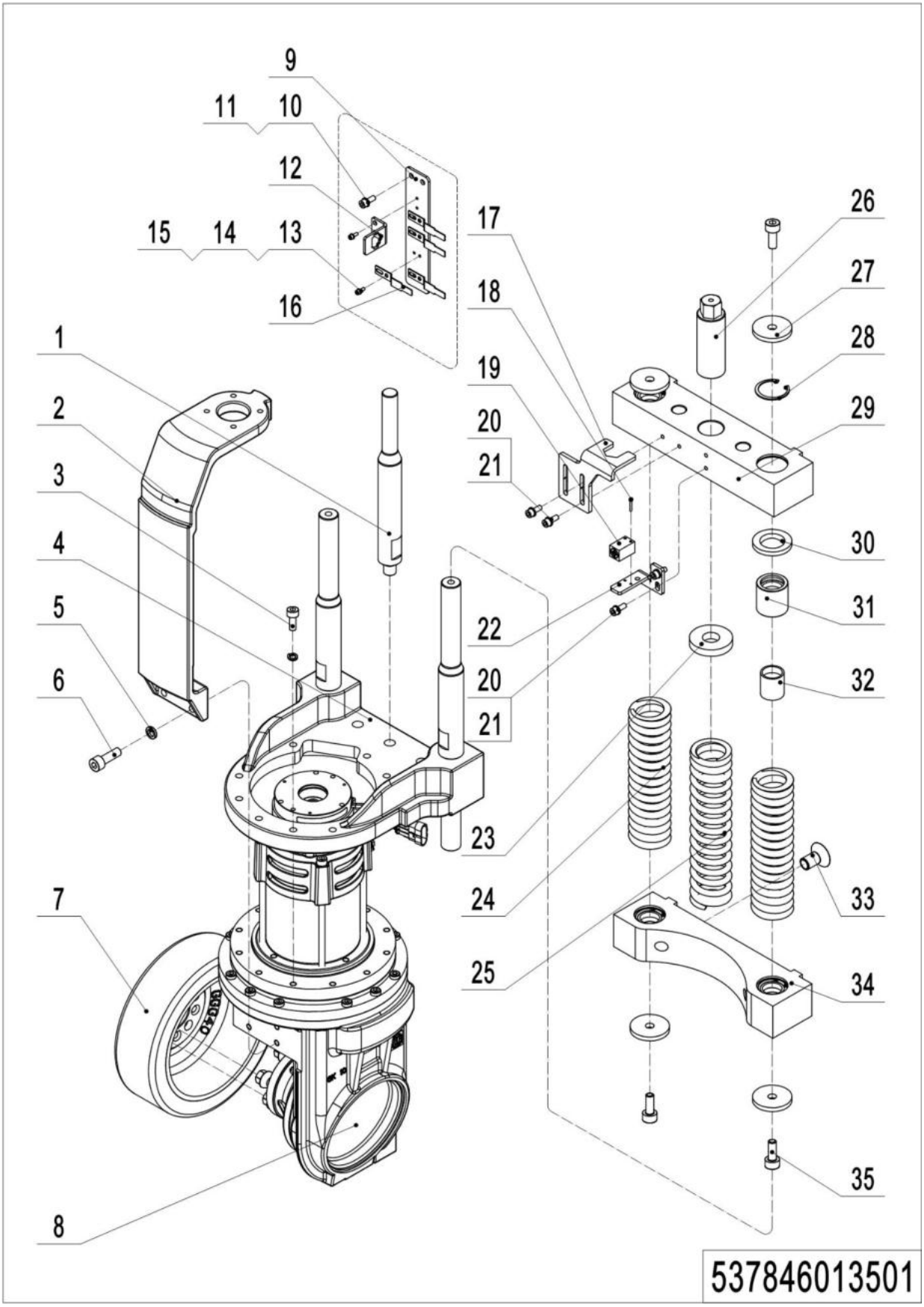

01 Drive unit (manual steering) (537846013501) continuation

No.	Item Code	Mark	Item Description	Qty.	Substitute	Note
30	537813520021		Check Ring	4		
31	537813520008		Mounting Base	4		
32	537813520020		Bushing	4		
33	910200400022		Screw	4		
34	537813520005		Fixing Plate	1		
35	910200200075		Screw	4		

02 Drive assembly 1.4kW (535946013502)

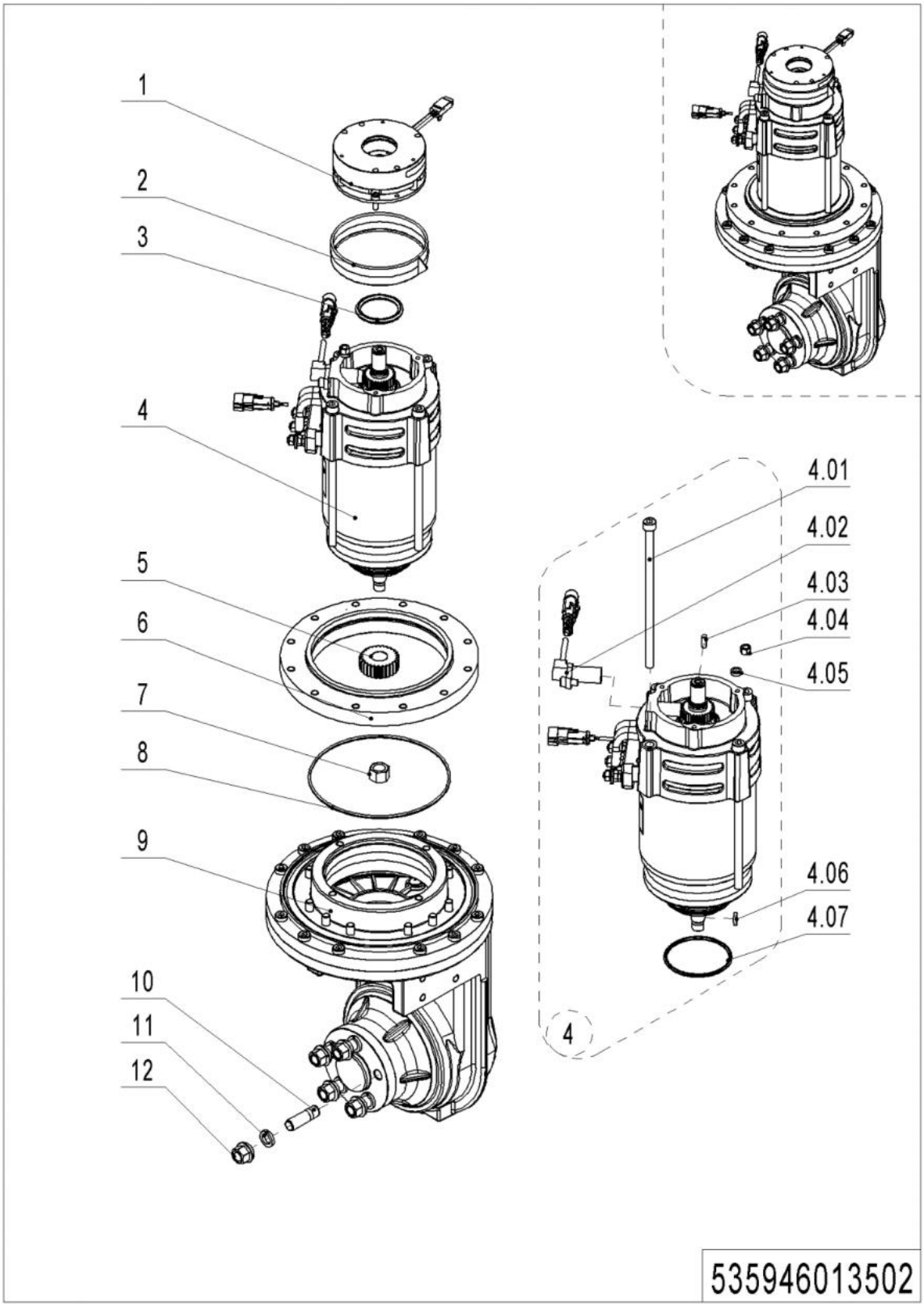

1= Supply as package. 2= Supply with constraints. 3= Phasing-out supply. 4= Supply as assembly. 5= Check other tables.

02 Drive assembly 1.4kW (535946013502)

No.	Item Code	Mark	Item Description	Qty.	Substitute	Note
--	940900400004		Drive Unit	1		
1	535998510001		Brake	1		
2	535998520001		Division Plate	1		
3	535998520000		Locating Ring	1		
4	535998510003		Motor	1		
4.01	535998520002		Screw	4		
4.02	535998510002		Sensor	1		
4.03	535998520005		Feather Key	1		
4.04	535998520003		Nut	1		
4.05	535998520004		Safety Element	1		
4.06	535998520006		Key	1		
4.07	535998520007		O-Ring	1		
5	910200200060		Screw	9		
6	535998520014		Gear	1		
7	535998520010		Plate	1		
8	535998520008		Nut	1		
9	535998520009		O-Ring	1		
10	535998510004		Gearbox Assembly	1		
11	535998520011		Bolt	5		
12	535998520012		Washer	5		
13	535998520013		Nut	5		

03 Drive assembly (EPS) (537846013502)

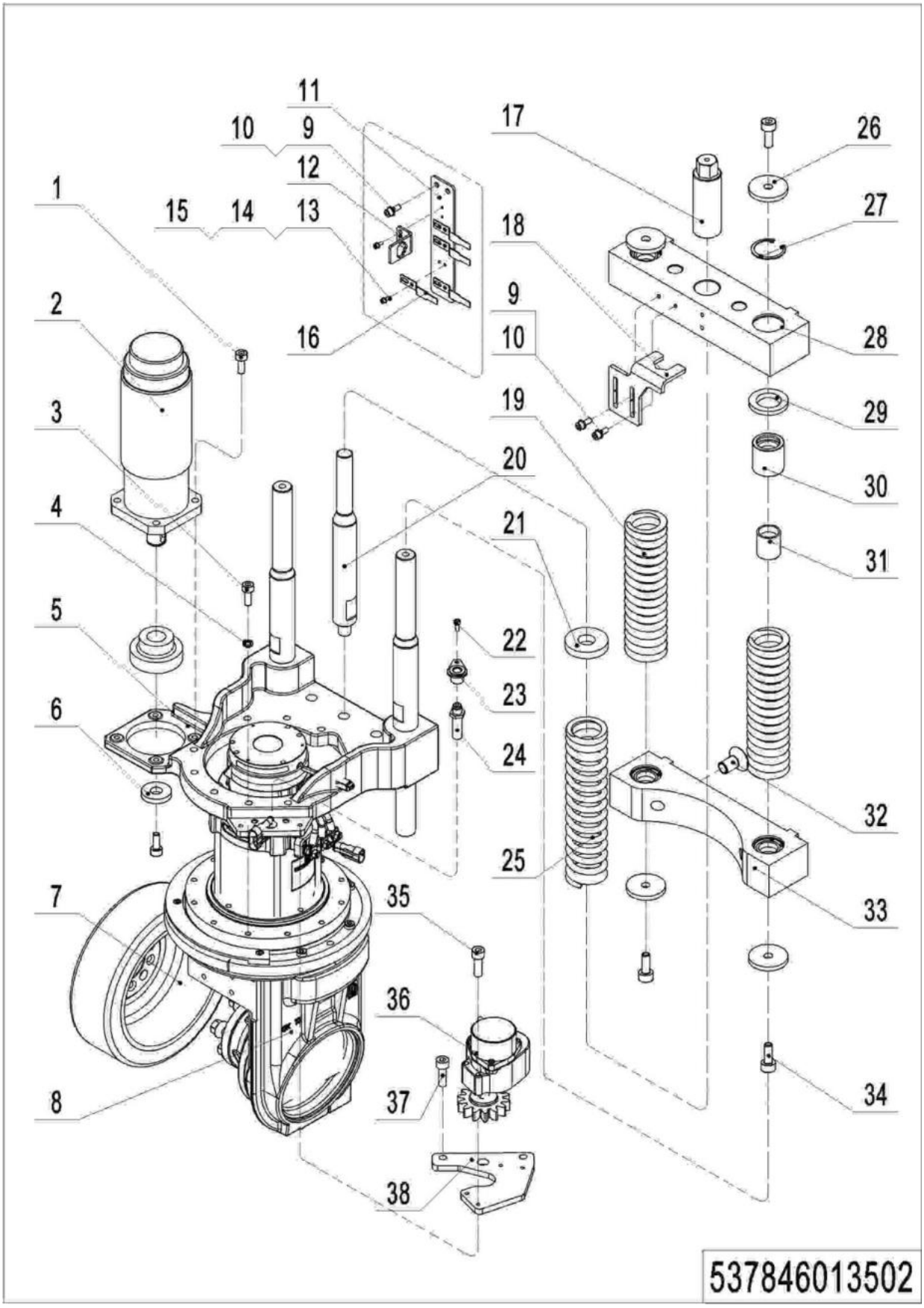

1= Supply as package. 2= Supply with constraints. 3= Phasing-out supply. 4= Supply as assembly. 5= Check other tables.

03 Drive assembly (EPS) (537846013502)

No.	Item Code	Mark	Item Description	Qty.	Substitute	Note
1	910200200057		Screw	5		
2	920900100069		Motor	1		
3	910200200059		Screw	9		
4	910400500006		Spring Washer	9		
5	537898510011		Wheel Mount	1		
6	506713520001		Retaining Ring	1		
7	940300400005		WheelΦ230x70	1		
8	----------		Drive Unit	1		**See 535946013504**
9	910200200035		Screw	4		
10	910400100005		Flat Washer	4		
11	537813520018		Mounting Plate	1		
12	921300300003		Holder	1		
13	910200500020		Screw	10		
14	910400100003		Flat Washer	10		
15	910400500003		Spring Washer	10		
16	921300300010		Connector Holder	4		
17	537813520007		Sleeve-stop	2		
18	537813520012		Fixing Plate	1		
19	537813520006		Spring	2		
20	537813520015		Guide Rail	1		
21	537813520014		Washer	1		
22	910200200013		Screw	1		
23	533213510005		Bushing	1		
24	505733510001		Proximity Switch	1		
25	537813520016		Spring	1		
26	537813520013		Washer	4		
27	910401400014		Circlip	4		
28	537813520004		Fixing Plate	1		
29	537813520021		Check Ring	4		

1= Supply as package. 2= Supply with constraints. 3= Phasing-out supply. 4= Supply as assembly. 5= Check other tables.

03 Drive assembly (EPS) (537846013502) continuation

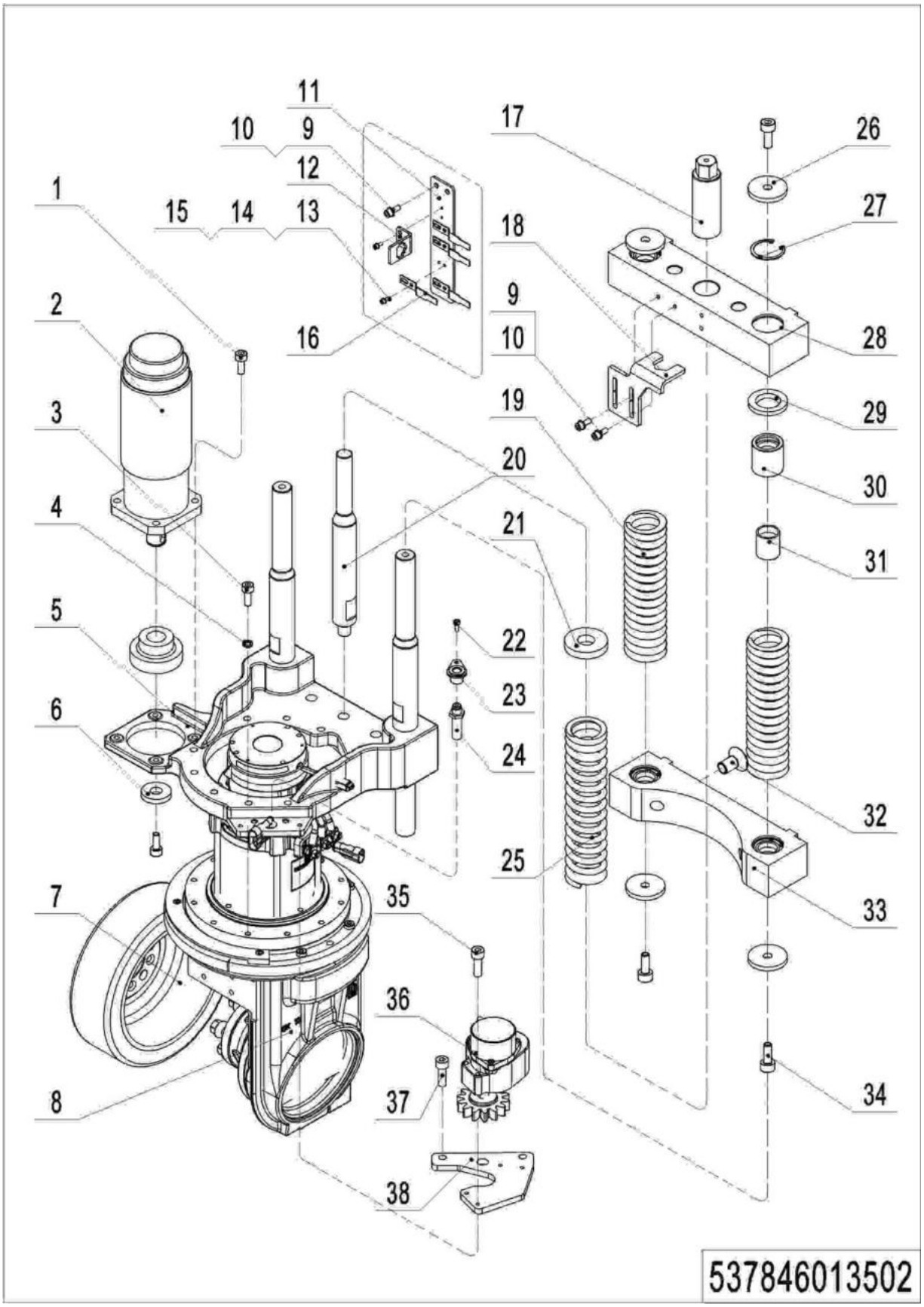

1= Supply as package. 2= Supply with constraints. 3= Phasing-out supply. 4= Supply as assembly. 5= Check other tables.

03 Drive assembly (EPS) (537846013502) continuation

No.	Item Code	Mark	Item Description	Qty.	Substitute	Note
30	537813520008		Mounting Base	4		
31	537813520020		Bushing	4		
32	910200400022		Screw	4		
33	537813520005		Fixing Plate	1		
34	910200200075		Screw	4		
35	910200200018		Screw	4		**EN1175-2020**
36	921800100059		Sensor	1		**EN1175-2020**
37	910200200035		Screw	2		**EN1175-2020**
38	537813520019		Mounting Plate	1		**EN1175-2020**

04 Drive steering assembly 1.4kW (535946013504)

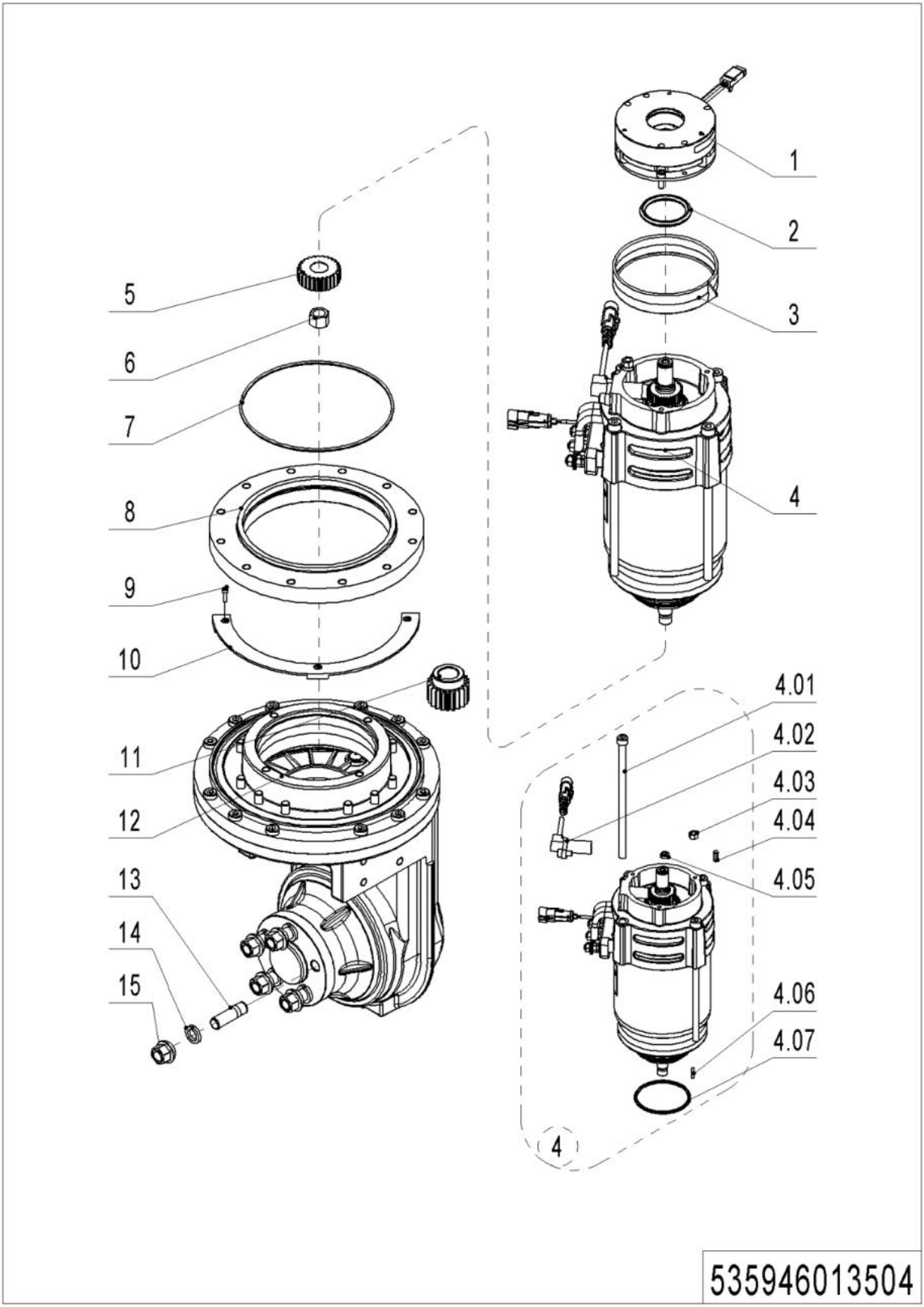

1= Supply as package. 2= Supply with constraints. 3= Phasing-out supply. 4= Supply as assembly. 5= Check other tables.

04 Drive steering assembly 1.4kW (535946013504)

No.	Item Code	Mark	Item Description	Qty.	Substitute	Note
--	940900500008		Steering Unit	1		
1	535998510001		Brake	1		
2	535998520000		Locating Ring	1		
3	535998520001		Division Plate	1		
4	535998510003		Motor	1		
4.01	535998520002		Screw	4		
4.02	535998510002		Sensor	1		
4.03	535998520003		Nut	1		
4.04	535998520005		Feather Key	1		
4.05	535998520004		Safety Element	1		
4.06	535998520006		Key	1		
4.07	535998520007		O-Ring	1		
5	535998520014		Gear	1		
6	535998520008		Nut	1		
7	535998520009		O-Ring	1		
8	535998520010		Plate	1		
9	535998520015		Screw	3		
10	535998520016		Limiter	1		
11	535998520017		Gear	1		
12	535998510005		Gearbox Assembly	1		
13	535998520011		Bolt	5		
14	535998520012		Washer	5		
15	535998520013		Nut	5		

Chapter 2: Hydraulic system

01 Hydraulic circuit (FFL, TX) (537846024001)

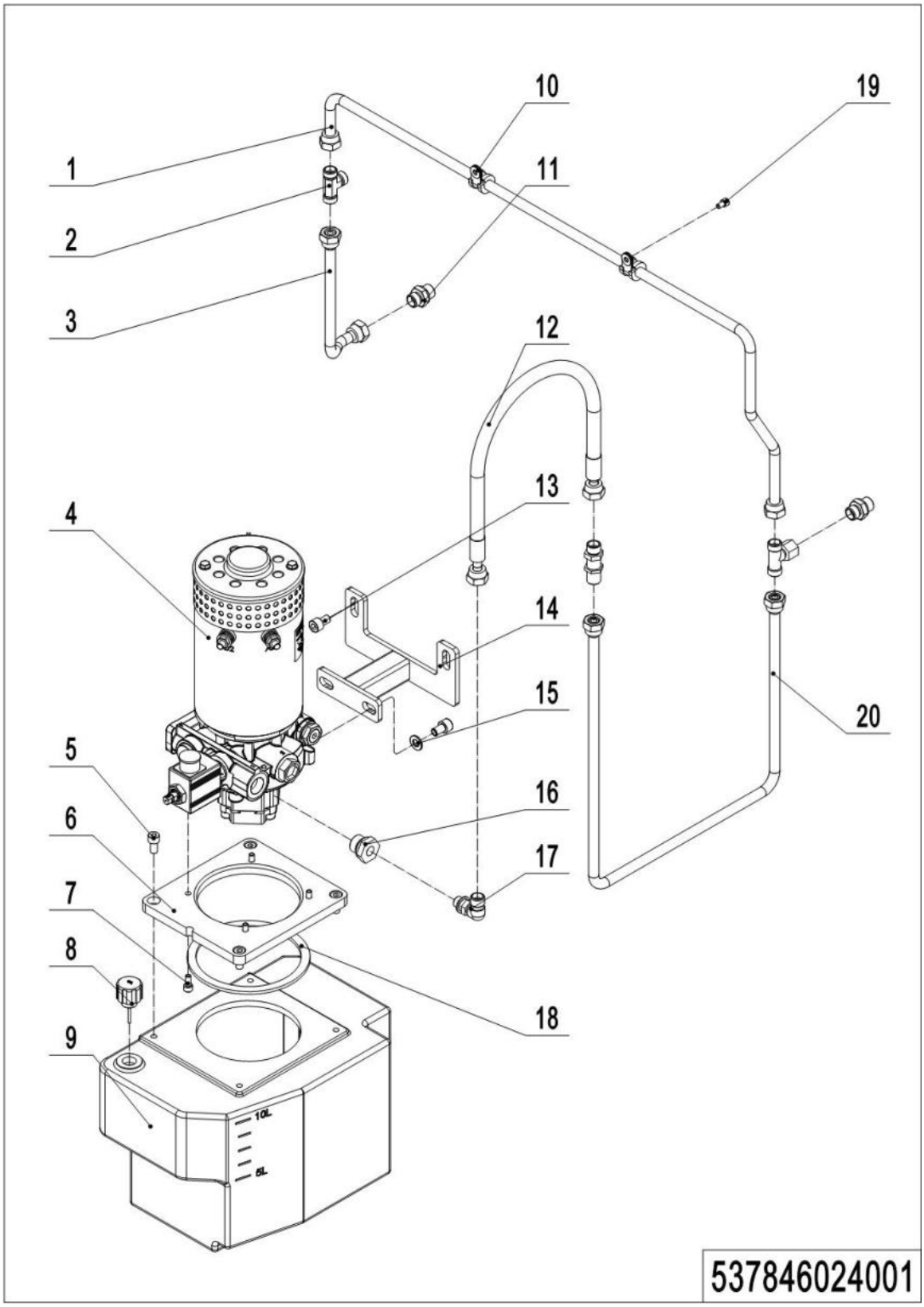

1= Supply as package. 2= Supply with constraints. 3= Phasing-out supply. 4= Supply as assembly. 5= Check other tables.

01 Hydraulic circuit (FFL, TX) (537846024001)

No.	Item Code	Mark	Item Description	Qty.	Substitute	Note
1	535924010002		Steel Tube	1		
2	950400900002		Joint	2		
3	533545020026		Steel Tube	1		
4	----------		Pump Unit	1		**See 534746023501**
4	----------		VIBO Pump Unit	1		**See 535946023501**
4	----------		VIBO Pump Unit	1		**See 534746023502**
5	910200200057		Screw	4		
6	537824020002		Fixing Plate	1		
7	910200200034		Screw	4		
8	951100200001		Screw Plug	1		
9	537819020001		Oil Tank	1		
10	951000100001		Hose Clamp	2		
11	950400400003		Joint	2		
12	537824010003		Hose	1		
13	910200200074		Screw	4		
14	537824010004		Mounting Rack	1		
15	910400100007		Flat Washer	4		
16	950401200004		Joint	1		
17	950401100003		Joint	1		
18	535919020003		Sealing Gasket	1		
19	910200200033		Screw	2		
20	537824010001		Steel Tube	1		

02 Hydraulic circuit (standard, TX) (537846024002)

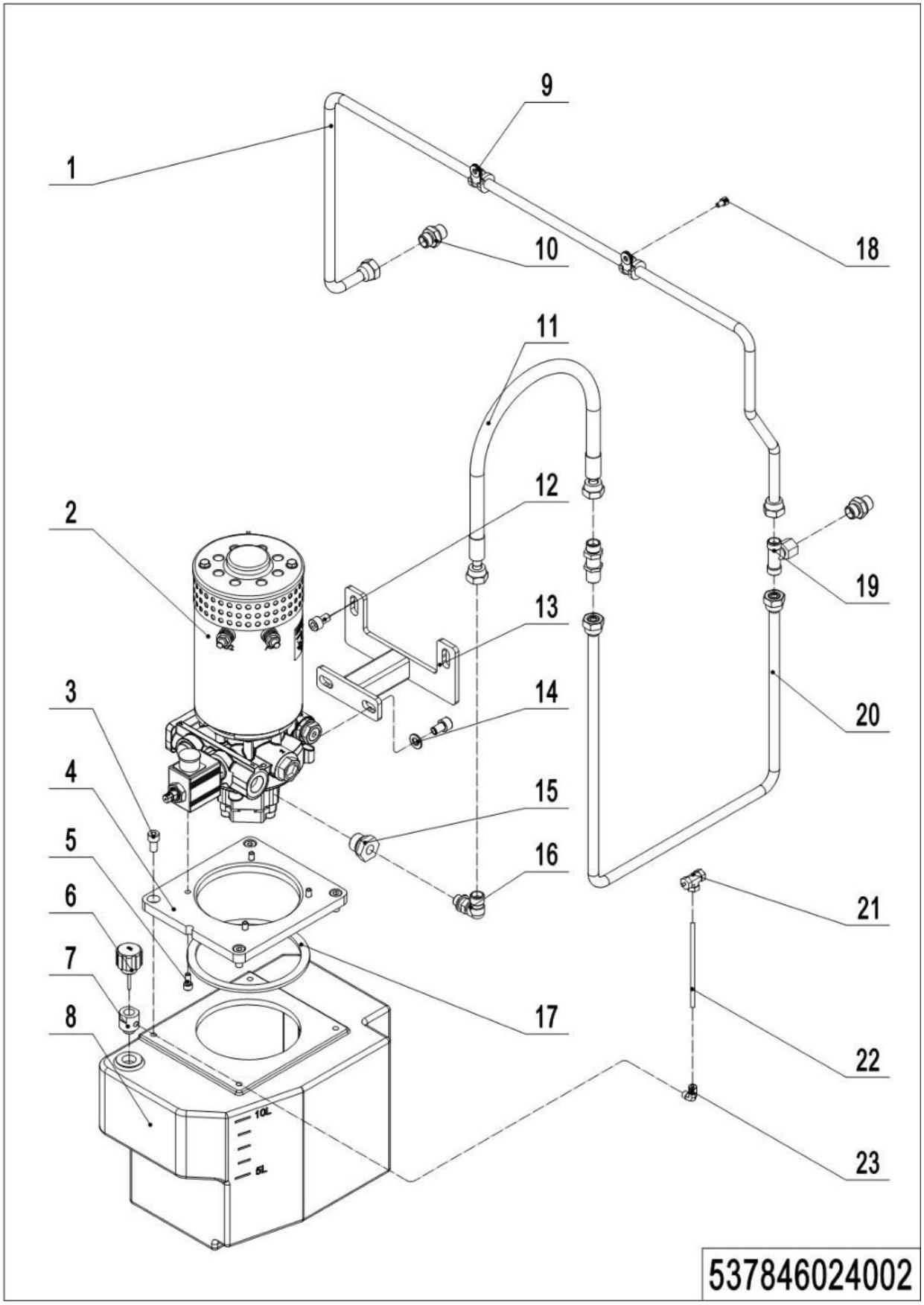

1= Supply as package. 2= Supply with constraints. 3= Phasing-out supply. 4= Supply as assembly. 5= Check other tables.

02 Hydraulic circuit (standard, TX) (537846024002)

No.	Item Code	Mark	Item Description	Qty.	Substitute	Note
1	535924010002		Steel Tube	1		
2	----------		Pump Unit	1		**See 534746023501**
2	----------		VIBO Pump Unit	1		**See 535946023501**
2	----------		VIBO Pump Unit	1		**See 534746023502**
3	910200200057		Screw	4		
4	537824020002		Fixing Plate	1		
5	910200200034		Screw	4		
6	951100200001		Screw Plug	1		
7	532624020015		Adapter	1		
8	537819020001		Oil Tank	1		
9	951000100001		Hose Clamp	2		
10	950400400003		Joint	2		
11	537824010003		Hose	1		
12	910200200074		Screw	4		
13	537824010004		Mounting Rack	1		
14	910400100007		Flat Washer	4		
15	950401200004		Joint	1		
16	950401100003		Joint	1		
17	535919020003		Sealing Gasket	1		
18	910200200033		Screw	2		
19	950400900002		Joint	1		
20	537824010001		Steel Tube	1		
21	950500200001		Joint	1		
22	535024010003		Pipe	1		
23	950500100001		Joint	3		

1= Supply as package. 2= Supply with constraints. 3= Phasing-out supply. 4= Supply as assembly. 5= Check other tables.

03 Hydraulic circuit (DX) (537846024003)

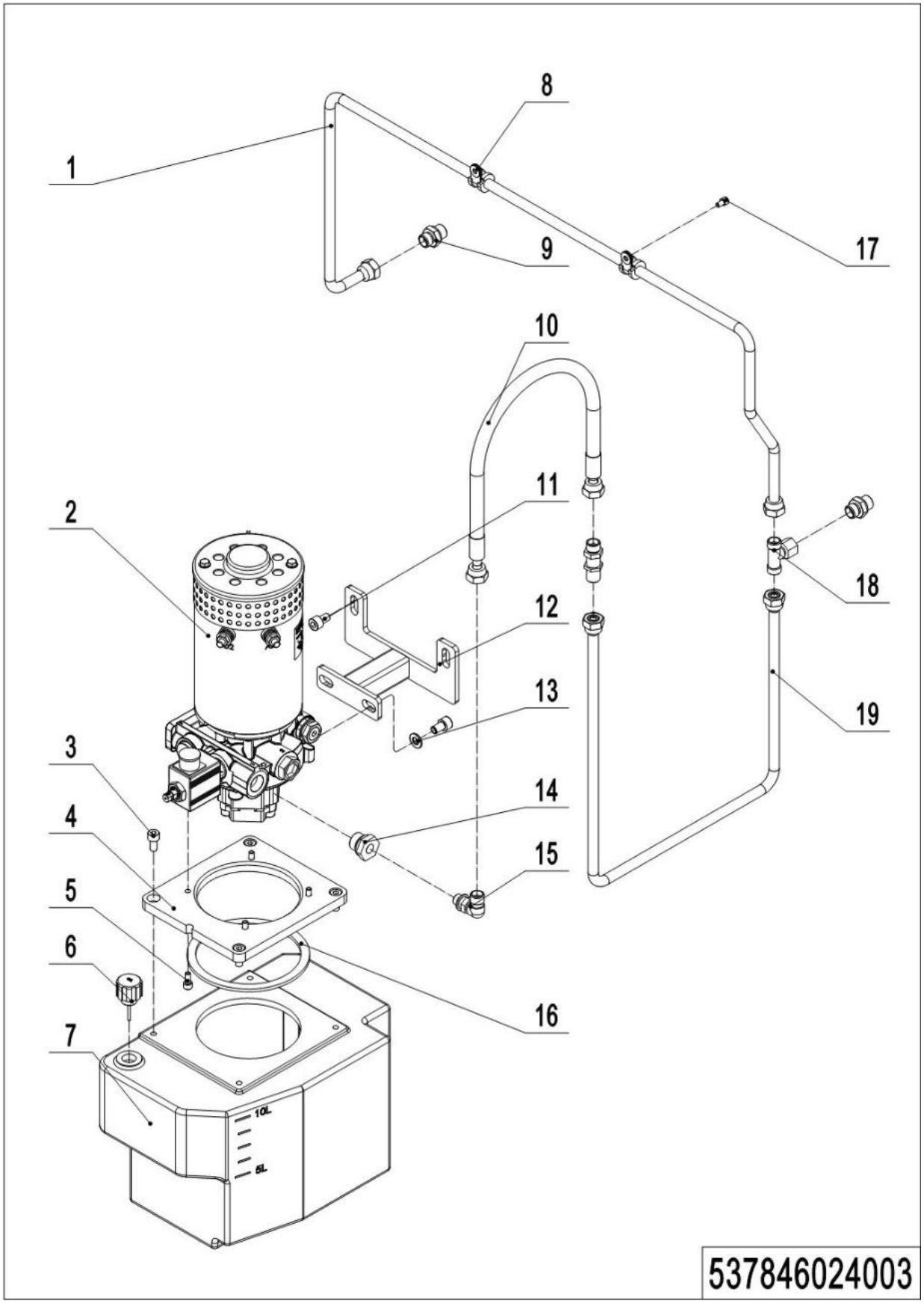

1= Supply as package. 2= Supply with constraints. 3= Phasing-out supply. 4= Supply as assembly. 5= Check other tables.

03 Hydraulic circuit (DX) (537846024003)

No.	Item Code	Mark	Item Description	Qty.	Substitute	Note
1	535624010002		Steel Tube	1		
2	----------		Pump Unit	1		**See 534746023501**
2	----------		VIBO Pump Unit	1		**See 535946023501**
4	----------		VIBO Pump Unit	1		**See 534746023502**
3	910200200057		Screw	4		
4	537824020002		Fixing Plate	1		
5	910200200034		Screw	4		
6	951100200001		Screw Plug	1		
7	537819020001		Oil Tank	1		
8	951000100001		Hose Clamp	2		
9	950400400003		Joint	2		
10	537824010003		Hose	1		
11	910200200074		Screw	4		
12	537824010004		Mounting Rack	1		
13	910400100007		Flat Washer	4		
14	950401200004		Joint	1		
15	950401100003		Joint	1		
16	535919020003		Sealing Gasket	1		
17	910200200033		Screw	2		
18	950400900002		Joint	1		
19	537824010002		Steel Tube	1		

04 Pump unit (HPI, 3.2KW) (534746023501)

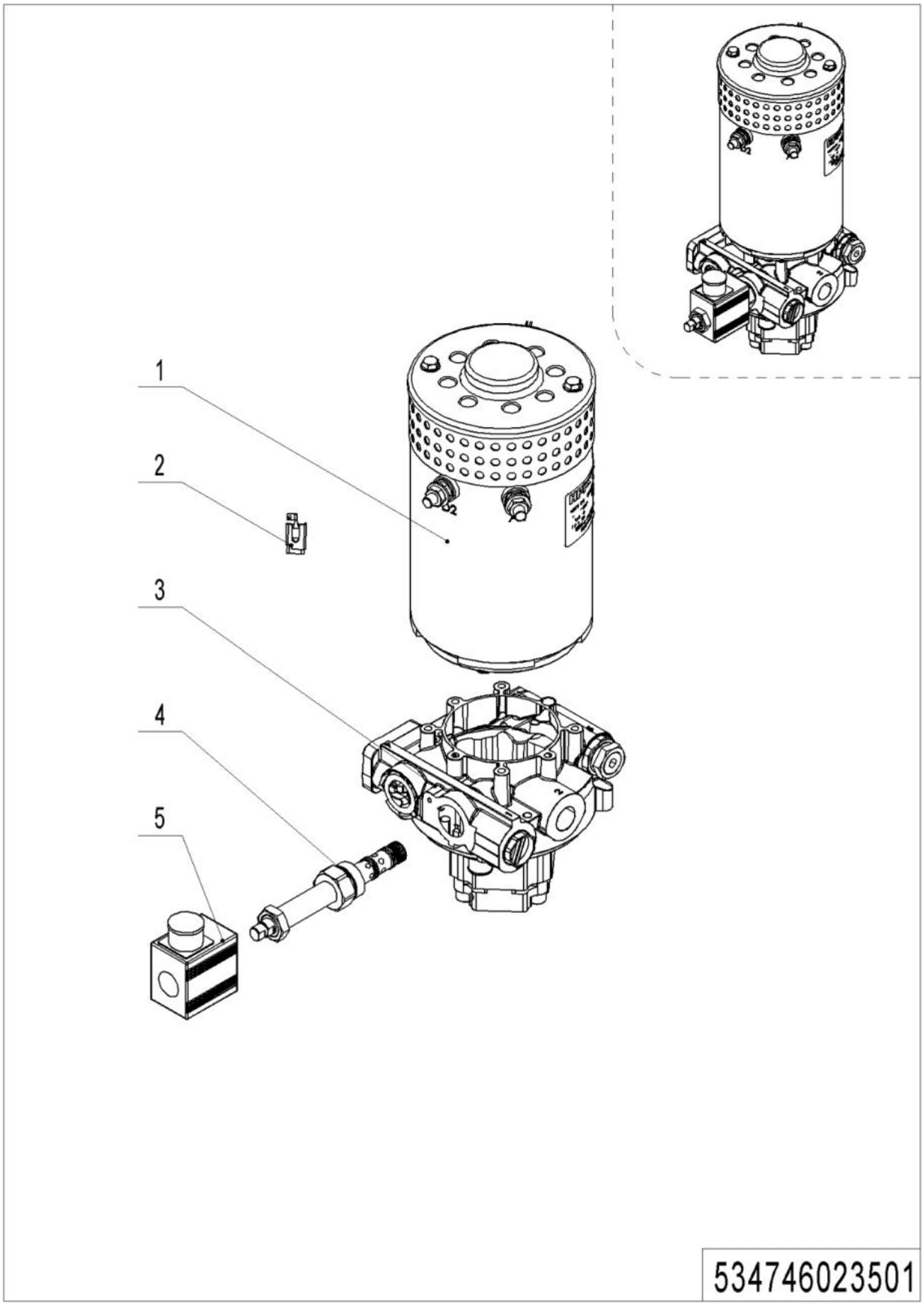

1= Supply as package. 2= Supply with constraints. 3= Phasing-out supply. 4= Supply as assembly. 5= Check other tables.

04 Pump unit (3.2KW)(534746023501)

No.	Item Code	Mark	Item Description	Qty.	Substitute	Note
--	950900100015		Pump Unit	1		
1	534798510006		Motor	1		
2	534798520026		Carbon Brush	1		
3	534798510007		Valve Block	1		
4	534798520024		Magnetic Valve	1		Provide with coil
5	534798520025		Coil	1		Provide with valve

05 Pump unit (VIBO,3.0KW) (537846023501)

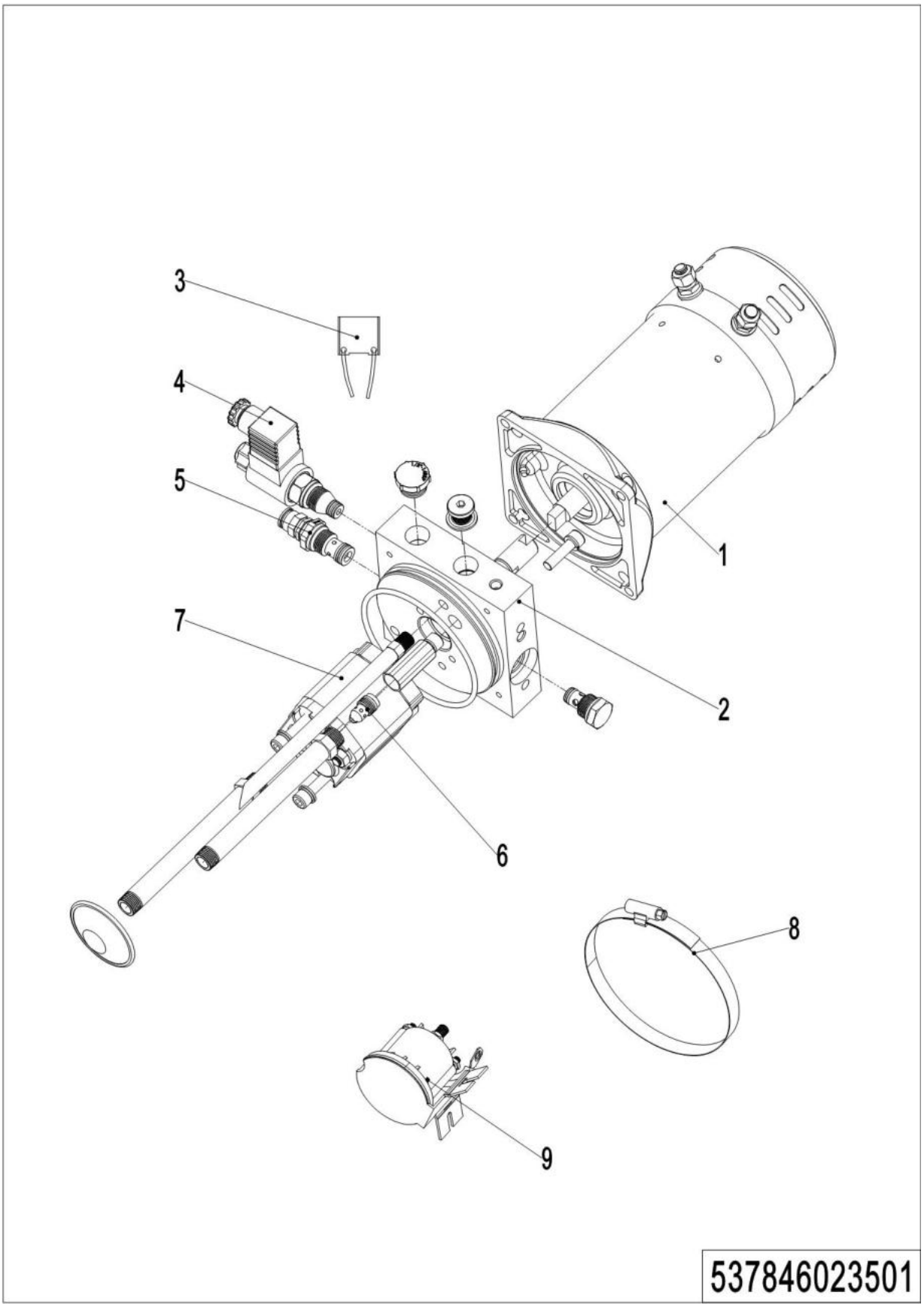

1= Supply as package. 2= Supply with constraints. 3= Phasing-out supply. 4= Supply as assembly. 5= Check other tables.

05 Pump unit (VIBO,3.0KW)(537846023501)

No.	Item Code	Mark	Item Description	Qty.	Substitute	Note
--	950900100109		Pump Unit	1		
1	535998510008		Motor	1		
2	535998520018		Valve Block	1		
3	535998510013		Carbon Brush	1		
4	535998510009		Magnetic Valve	1		
5	535998510011		Overflow Valve	1		
6	535998510012		Valve	1		
7	505998510013		Gear Pump	1		
8	537898510000		Hoop	1		QT
9	537898510001		Contactor	1		QT

06 Pump Unit (VIBO,3.2KW)(534746023502)

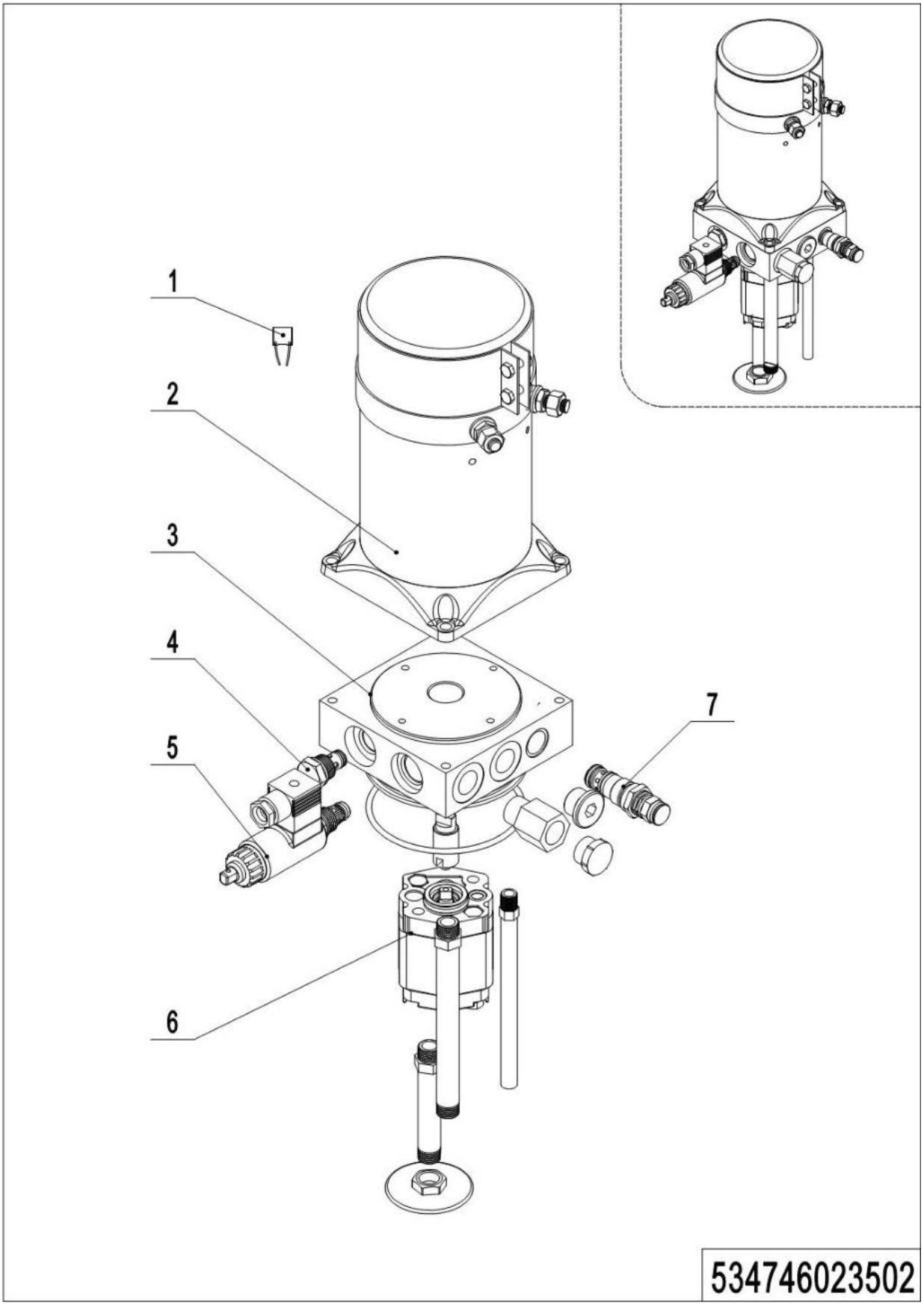

1= Supply as package. 2= Supply with constraints. 3= Phasing-out supply. 4= Supply as assembly. 5= Check other tables.

06 Pump Unit (534746023502)

No.	Item Code	Mark	Item Description	Qty.	Substitute	Note
--	950900100098		Pump Unite	1		**VIBO,3.2KW**
1	535998510013		Carbon Brush	1		
2	534798510012		Motor	1		
3	534798510013		Valve Block	1		
4	532098510003		Check Valve	1		
5	534798510014		Magnetic Valve	1		
6	534798510015		Gear Pump	1		
7	402698520018		Overflow Valve	1		

Chapter 3: Truck structure

01 Truck frame (537846021501)

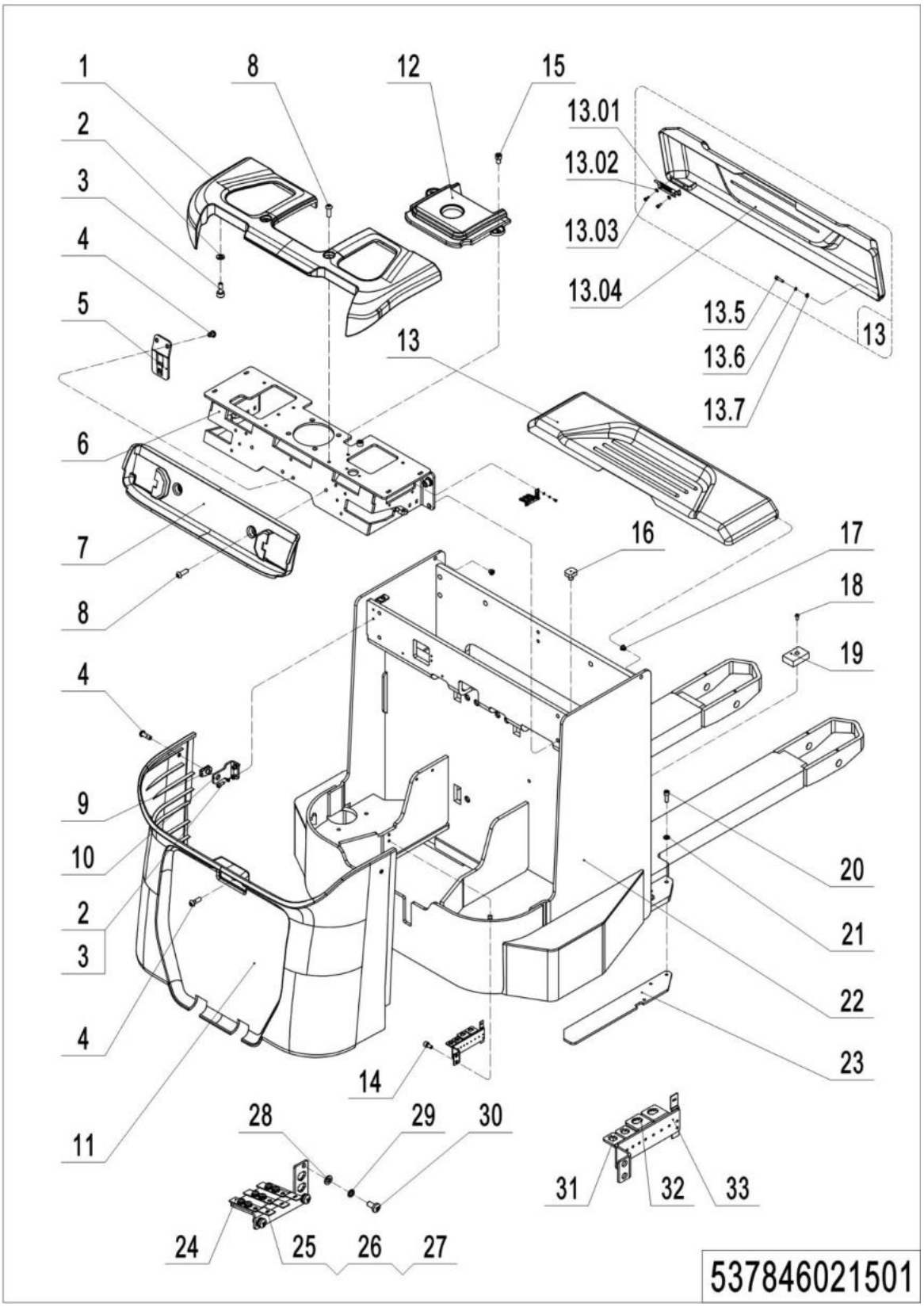

1= Supply as package. 2= Supply with constraints. 3= Phasing-out supply. 4= Supply as assembly. 5= Check other tables.

01 Truck frame (537846021501)

No.	Item Code	Mar	Item Description	Qty.	Substitute	Note
1	535921520040		Protective Cover	1		
2	910400100005		Flat Washer	8		
3	910200200035		Screw	8		
4	941100100004		Screw	5		
5	535921520032		Mounting Plate	1		
6	535917510000		Mounting Base	1		
7	535921520041		Protective Cover	1		
8	941100100005		Screw	4		
9	940400400003		Cage Nut	3		
10	535921520031		Mounting Plate	2		
11	535921520039		Protective Cover	1		
12	535921520042		Protective Cover	1		
13	537821010001		Cell Cover Assembly	1		
13.01	940800900001		Lock Pin	1		
13.02	910400100003		Flat Washer	2		
13.03	910200200013		Screw	2		
13.04	537821010002		Cell Cover	1		
13.05	910200200024		Screw	1		
13.06	910400500004		Spring Washer	1		
13.07	910400100004		Flat Washer	1		
14	910200500061		Screw	2		
15	910200200074		Screw	2		
16	505938520016		Crash Pad	2		
17	534721520023		Sleeve	2		
18	910200300017		Screw	2		
19	534721520024		Crash Pad	2		
20	910200200058		Screw	3		
21	910400100006		Flat Washer	3		
22	537821510001		Chassis(570x1150)	1		

1= Supply as package. 2= Supply with constraints. 3= Phasing-out supply. 4= Supply as assembly. 5= Check other tables.

01 Truck frame (537846021501) continuation

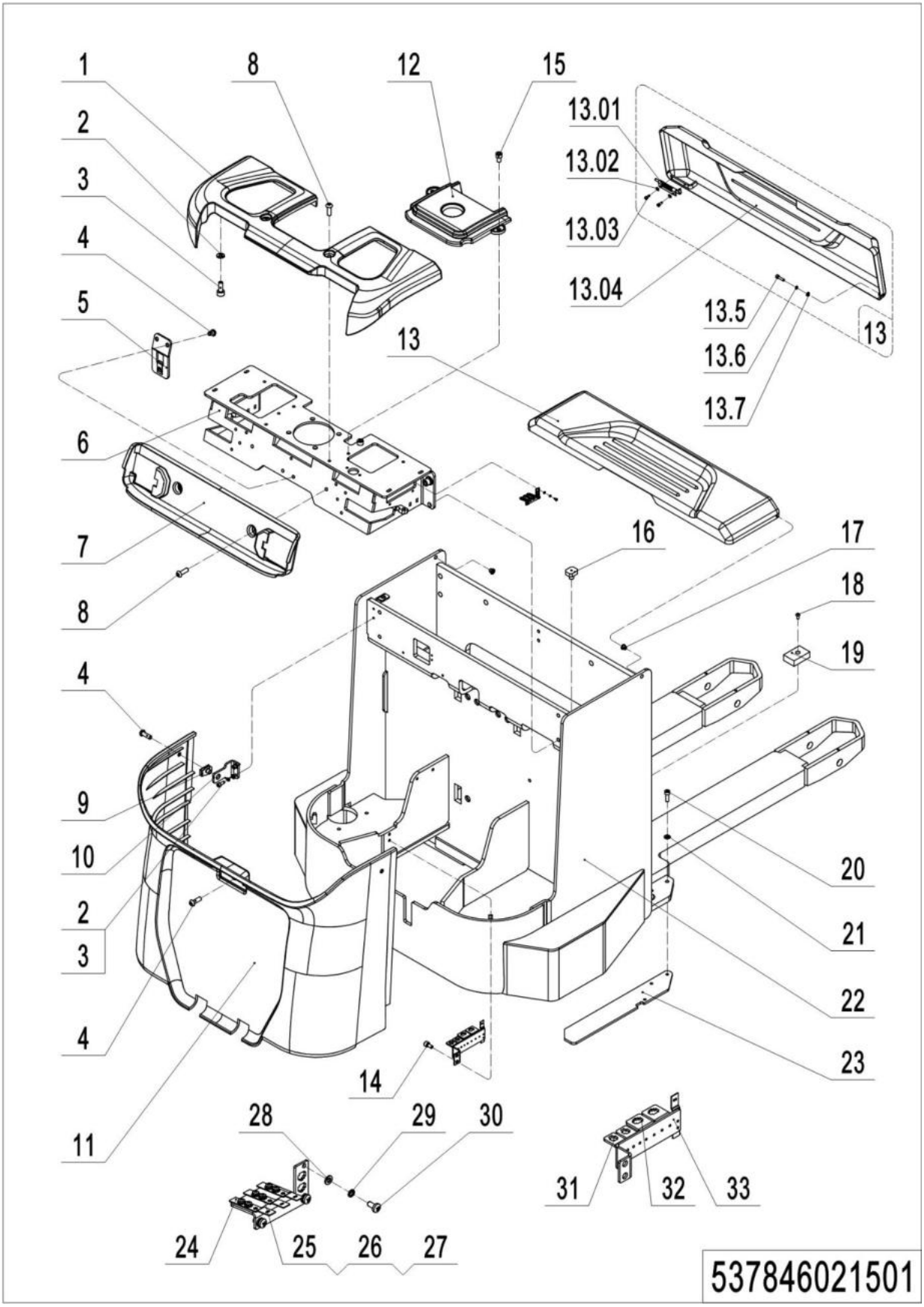

1= Supply as package. 2= Supply with constraints. 3= Phasing-out supply. 4= Supply as assembly. 5= Check other tables.

01 Truck frame (537846021501) continuation

No.	Item Code	Mar	Item Description	Qty.	Substitute	Note
22	537821510002	2	Chassis(685x1150)	1		
23	535921520030		Guard Plate	1		
24	921300300005		Holder	4		
25	910200500020		Screw	14		
26	910400100003		Flat Washer	14		
27	910400500003		Spring Washer	14		
28	910400100005		Flat Washer	2		
29	910400500005		Spring Washer	2		
30	910200500052		Screw	2		
31	921300300002		Holder	2		
32	921300300003		Holder	2		
33	537821520015		Mounting Plate	1		

02 Truck frame(Sideways Exchange)(537846021502)

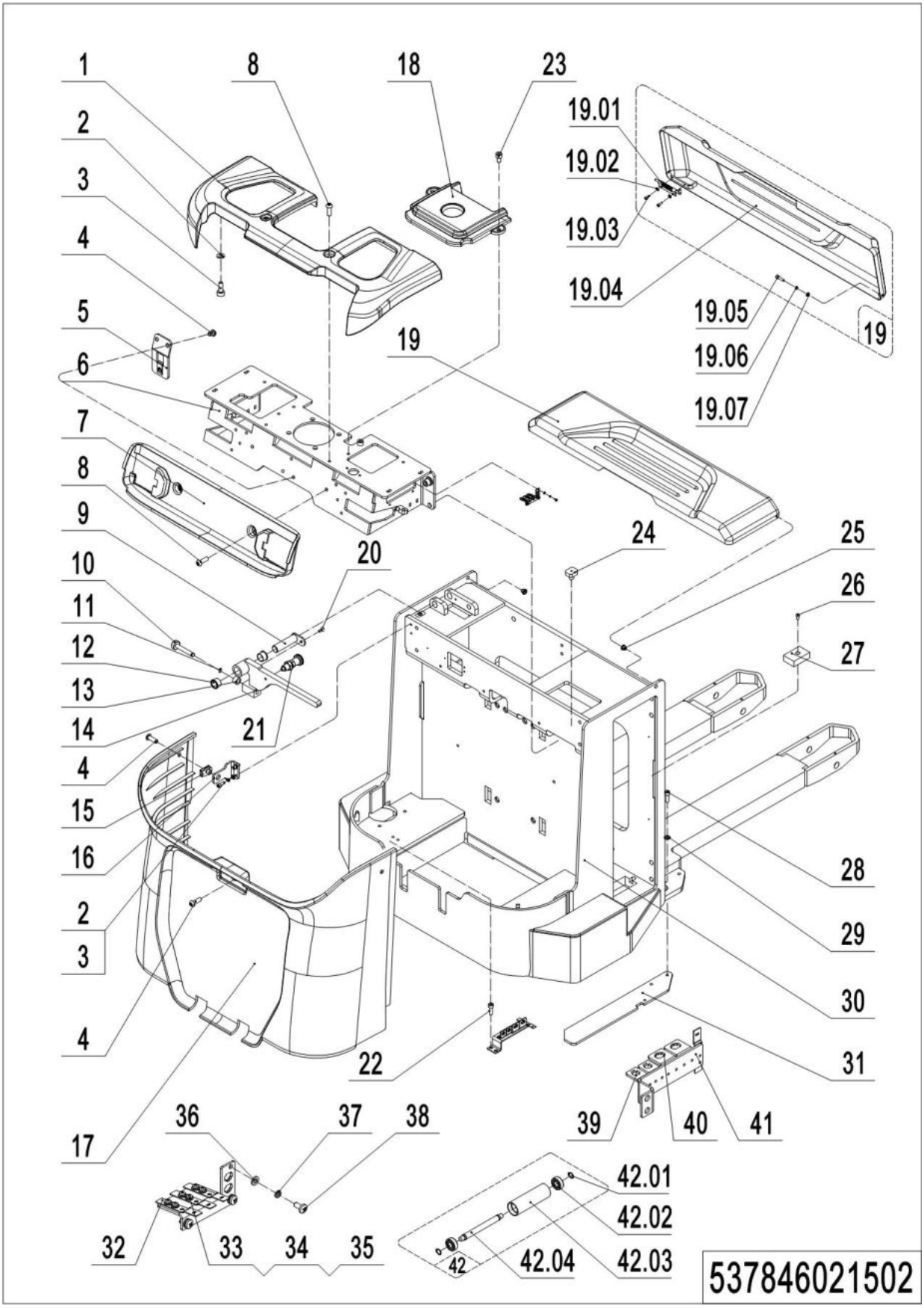

1= Supply as package. 2= Supply with constraints. 3= Phasing-out supply. 4= Supply as assembly. 5= Check other tables.

02 Truck frame(Sideways Exchange)(537846021502)

No.	Item Code	Mark	Item Description	Qty.	Substitute	Note
1	535921520040		Protective Cover	1		
2	910400100005		Flat Washer	8		
3	910200200035		Screw	8		
4	941100100004		Screw	5		
5	535921520032		Mounting Plate	1		
6	535917510000		Mounting Base	1		
7	535921520041		Protective Cover	1		
8	941100100005		Screw	4		
9	535921510004		Pin	1		
10	535921520037		Pin	1		
11	910401300002		Circlip	1		
12	940500200008		Bushing	2		
13	535921520038		Spacer Bush	1		
14	535921510003		Baffle	1		
15	940400400003		Cage Nut	3		
16	535921520031		Mounting Plate	2		
17	535921520039		Protective Cover	1		
18	535921520042		Protective Cover	1		
19	537821010001		Cell Cover Assembly	1		
19.01	940800900001		Lock Pin	2		
19.02	910400100003		Flat Washer	2		
19.03	910200200013		Screw	2		
19.04	537821010002		Cell Cover	1		
19.05	910200200024		Screw	1		
19.06	910400500004		Spring Washer	1		
19.07	910400100004		Flat Washer	1		
20	910200400017		Screw	1		
21	940800900002		Indexing Plunger	1		
22	910200500061		Screw	2		

1= Supply as package. 2= Supply with constraints. 3= Phasing-out supply. 4= Supply as assembly. 5= Check other tables.

02 Truck frame(Sideways Exchange)(537846021502) continuation

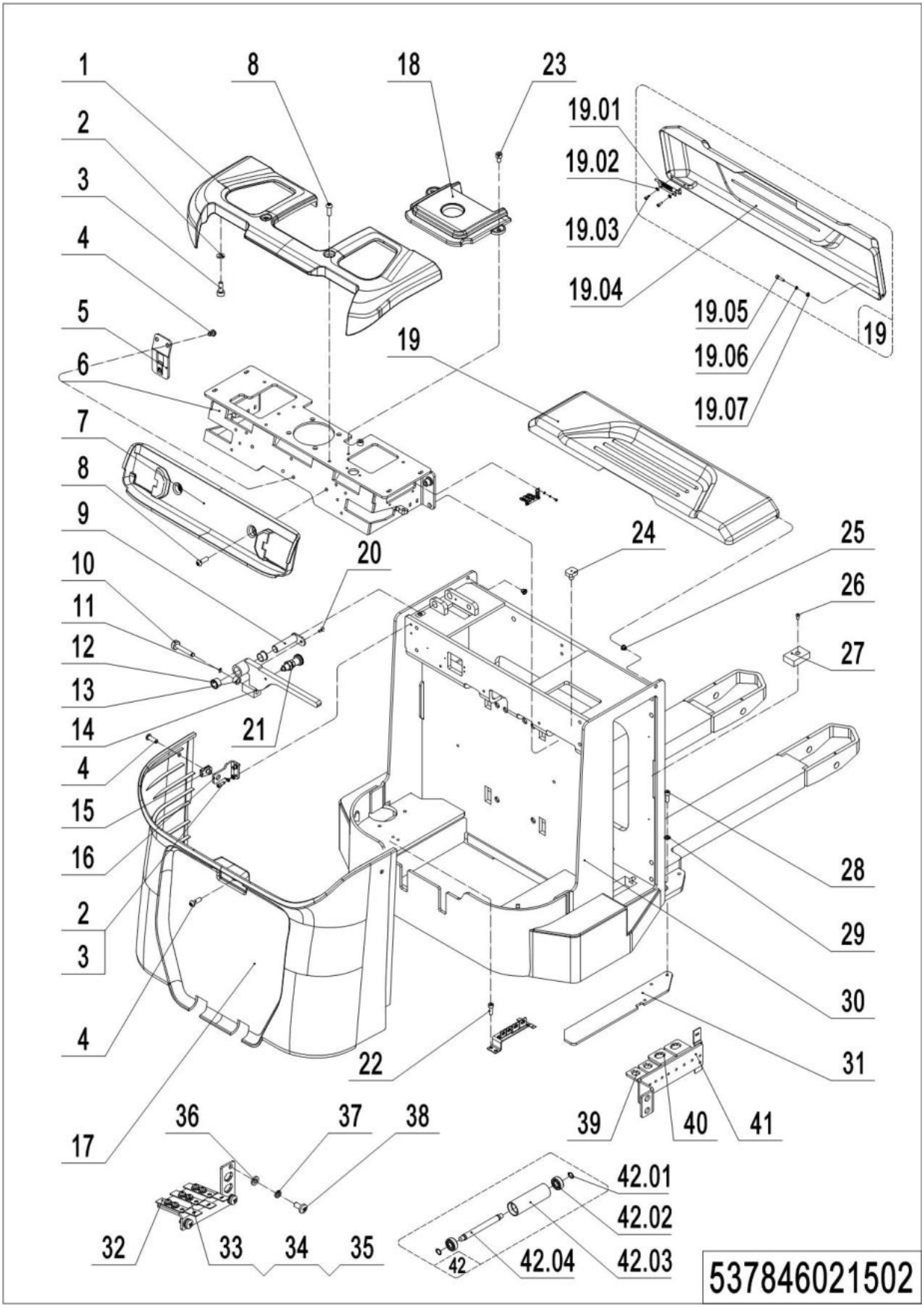

1= Supply as package. 2= Supply with constraints. 3= Phasing-out supply. 4= Supply as assembly. 5= Check other tables.

02 Truck frame(Sideways Exchange)(537846021502) continuation

No.	Item Code	Mark	Item Description	Qty.	Substitute	Note
23	910200200074		Screw	2		
24	505938520016		Crash Pad	2		
25	534721520023		Sleeve	2		
26	910200300017		Screw	2		
27	534721520024		Crash Pad	2		
28	910200200058		Screw	3		
29	910400100006		Flat Washer	3		
30	537821510003		Chassis(570x1150)	1		
30	537821510004		Chassis(685x1150)	1		
31	535921520030		Guard Plate	1		
32	921300300005		Holder	4		
33	910200500020		Screw	14		
34	910400100003		Flat Washer	14		
35	910400500003		Spring Washer	14		
36	910400100005		Flat Washer	2		
37	910400500005		Spring Washer	2		
38	910200500052		Screw	2		
39	921300300002		Holder	2		
40	921300300003		Holder	2		
41	537821520015		Mounting Plate	1		
42	534721510003		Roller	5		
42.01	910401300006		Circlip	2		
42.02	910700200017		Bearing	2		
42.03	534721520028		Roller	1		
42.04	534721520029		Axle	1		

03 Protective arm (535946017501)

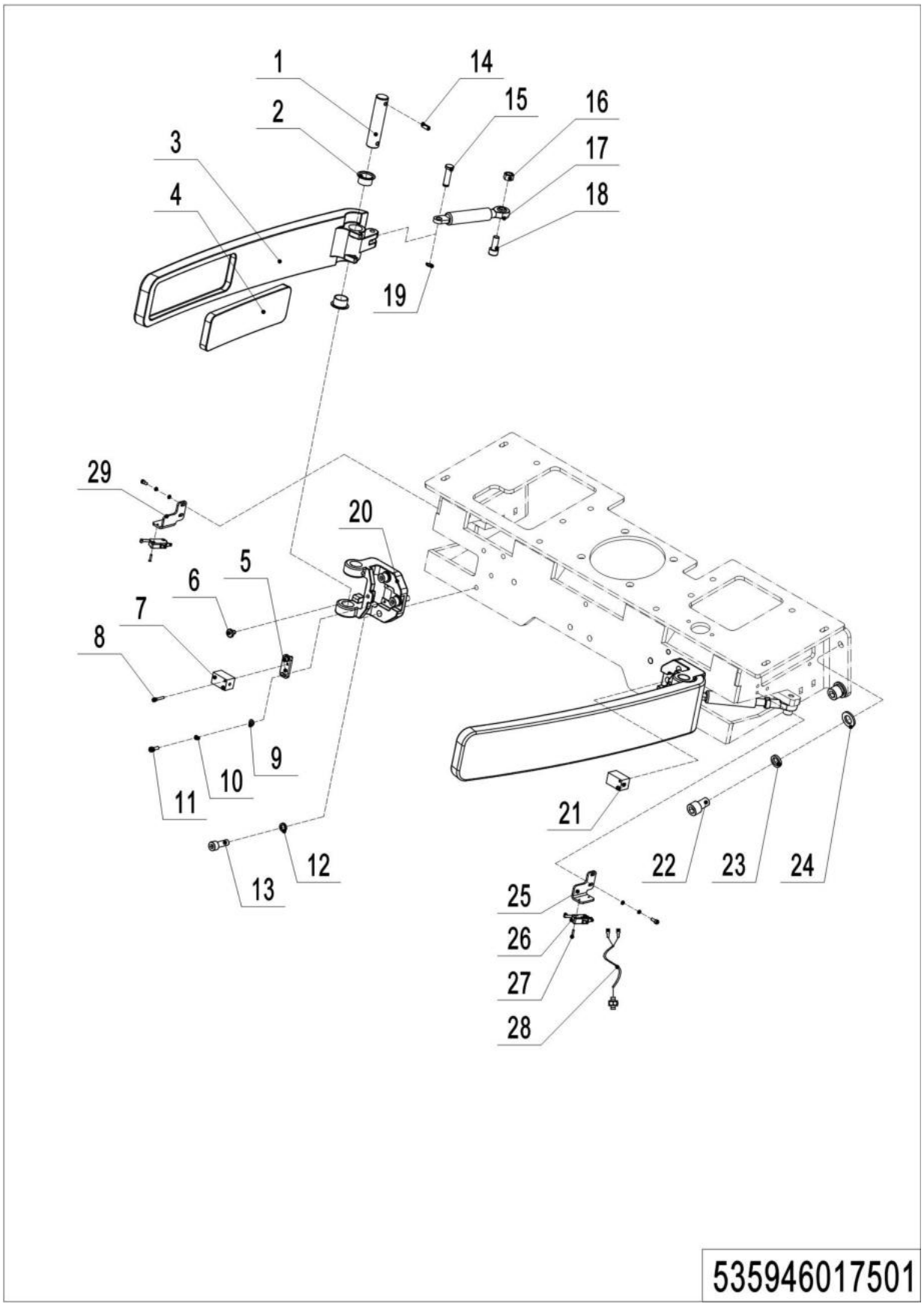

1= Supply as package. 2= Supply with constraints. 3= Phasing-out supply. 4= Supply as assembly. 5= Check other tables.

03 Protective arm (535946017501)

No.	Item Code	Mar	Item Description	Qty.	Substitute	Note
1	535917520007		Axle	2		
2	940500200003		Bushing	2		
3	535917520008		Protective Arm	2		
4	535917520009		Protective Mat	2		
5	535917520011		Mounting Plate	2		
6	535917520012		Protective Mat	2		
7	535933510001		Proximity Switch	2		
8	910200500015		Screw	4		
9	910400100003		Flat Washer	8		
10	910400500003		Spring Washer	8		
11	910200200014		Screw	8		
12	910400500006		Spring Washer	6		
13	910200200058		Screw	6		
14	910600400025		Spring Pin	2		
15	535917520010		Axle	2		
16	910300100006		Nut	2		
17	940400100037		Air Spring	2		
18	910200200060		Screw	2		
19	910401300001		Circlip	2		
20	535917520006		Mounting Base	2		
21	535933510000		Proximity Switch	1		
22	910200200096		Screw	4		
23	910400500008		Spring Washer	4		
24	910400100008		Flat Washer	4		
25	535917520013		Mounting Plate	1		With safety switch
26	920200300016		Microswitch	2		With safety switch
27	910200500014		Screw	4		With safety switch
28	506733010025		Wire Harness	2		With safety switch
29	535917520014		Mounting Plate	1		With safety switch

04 Platform (535946018001)

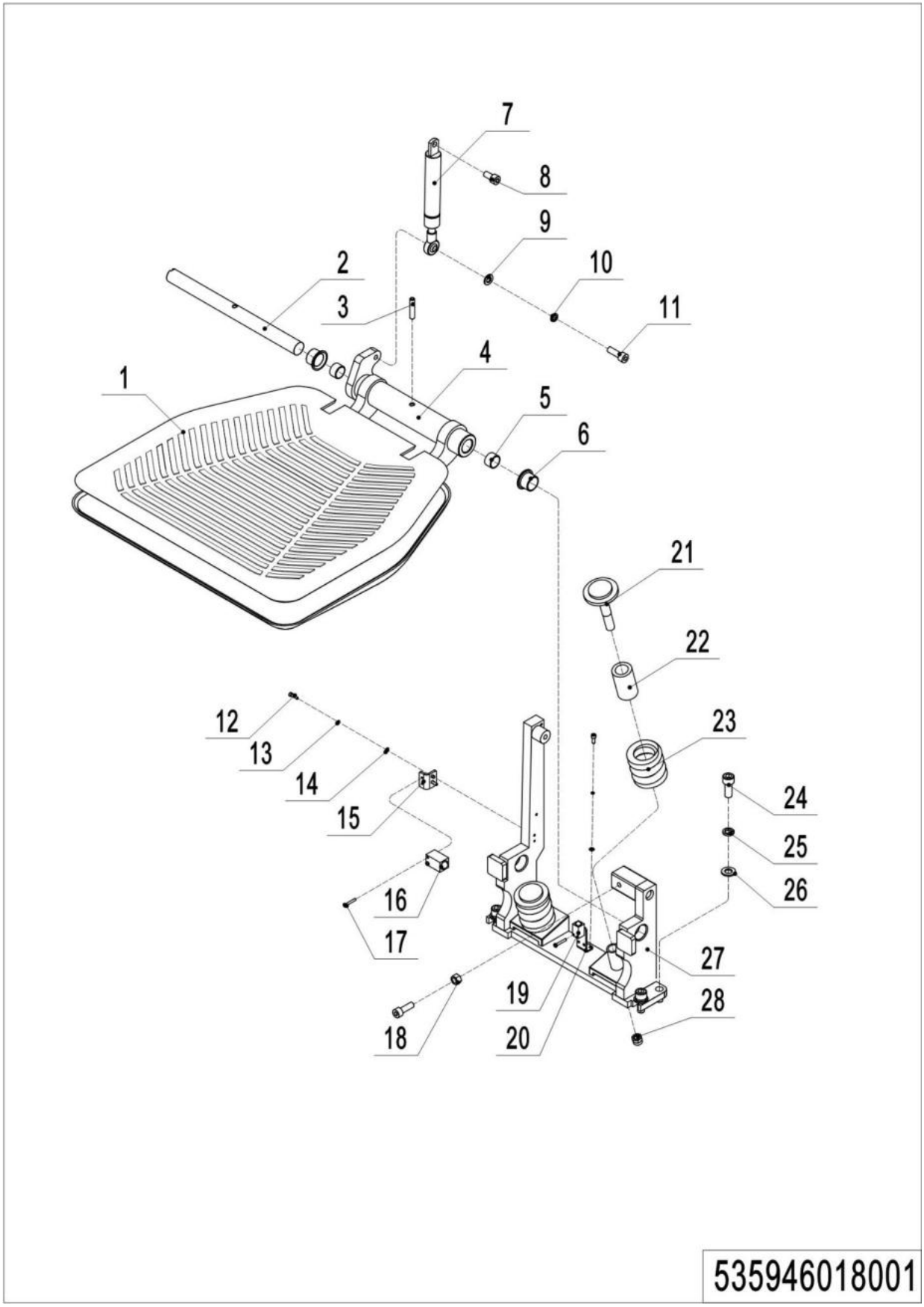

04 Platform (535946018001)

No.	Item Code	Mark	Item Description	Qty.	Substitute	Note
1	535918020019		Pedal Pad	1		
2	535918020014		Axle	1		
3	910600400040		Spring Pin	1		
4	535918010001		Platform	1		
5	940500100019		Bushing	2		
6	940500200008		Bushing	2		
7	940400100042		Air Spring	1		
7	940400100057		Air Spring	1		With safety switch
8	910200200057		Screw	1		
9	910400100006		Flat Washer	1		
10	910400500006		Spring Washer	1		
11	910200200058		Screw	2		
12	910200200014		Screw	4		
13	910400500003		Spring Washer	4		
14	910400100003		Flat Washer	4		
15	535918020015		Mounting Plate	1		
16	535933510002		Proximity Switch	1		
17	910200500015		Screw	2		
18	910300100007		Nut	1		
19	506733510005		Proximity Switch	1		With safety switch
20	535918020022		Mounting Plate	1		With safety switch
21	535918020017		Bolt	2		
22	535918020018		Cushion Collar	2		
23	535918020016		Spring	2		
24	910200200076		Screw	4		
25	910400500007		Spring Washer	4		
26	910400100007		Flat Washer	4		
27	535918010000		Mounting Base	1		
28	910300500006		Nut	2		

1= Supply as package. 2= Supply with constraints. 3= Phasing-out supply. 4= Supply as assembly. 5= Check other tables.

05 Fork carriage (534746038001)

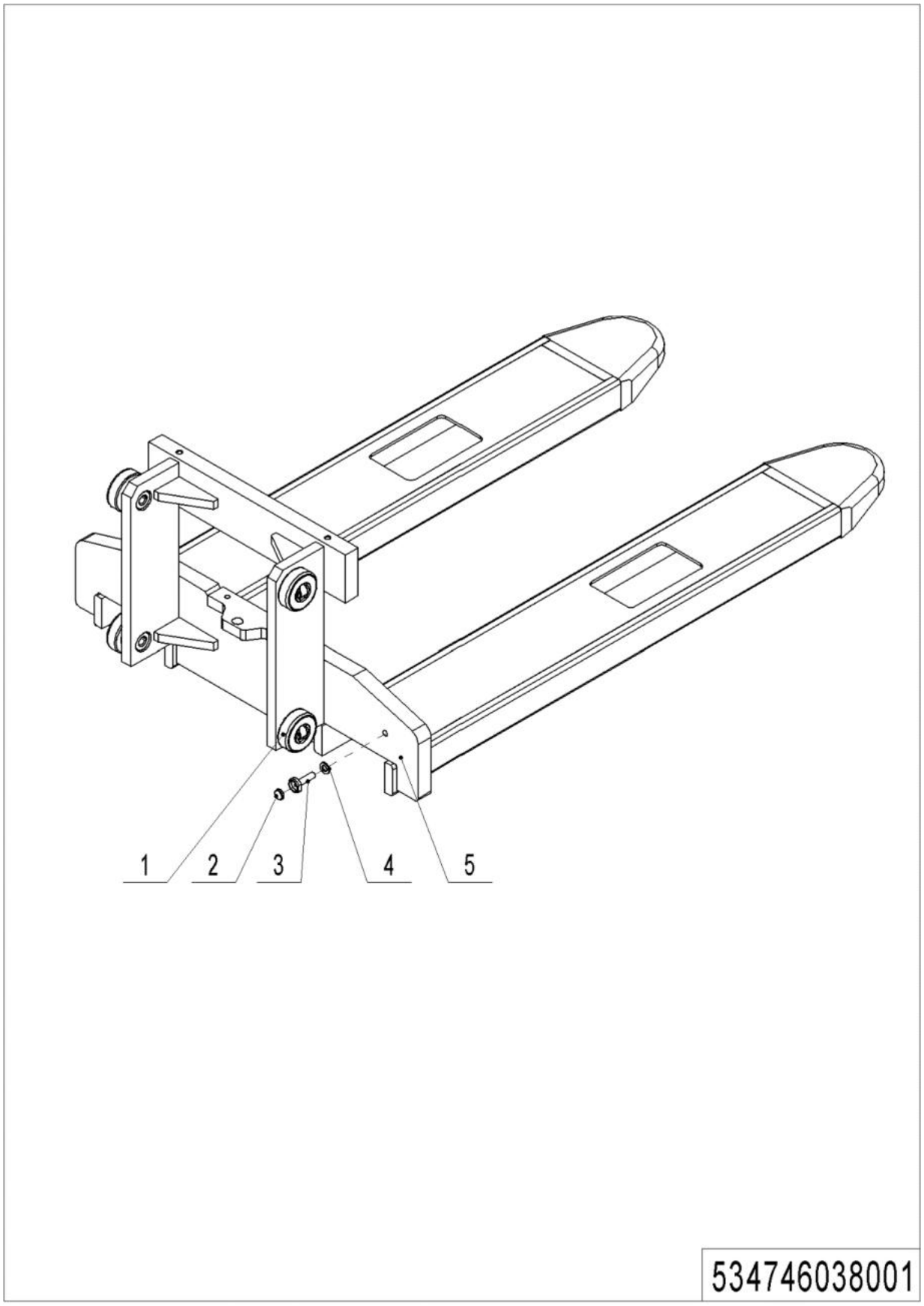

1= Supply as package. 2= Supply with constraints. 3= Phasing-out supply. 4= Supply as assembly. 5= Check other tables.

05 Fork carriage (534746038001)

No.	Item Code	Mark	Item Description	Qty.	Substitute	Note
1	940200300004		Compound Roller	4		
2	940600100001		Magnetic Steel	1		
3	940600200001		Mounting Base	1		
4	910400100007		Flat Washer	1		
5	534738010000		Fork(570x1150)	1		DX
5	534738010001		Fork(685x1150)	1		DX
5	534738010002		Fork(570x1150)	1		DX+FFL
5	534738010003		Fork(685x1150)	1		DX+FFL
5	534738010004		Fork(570x1150)	1		TX
5	534738010005		Fork(685x1150)	1		TX
5	534738010006		Fork(570x1150)	1		TX+FFL
5	534738010007		Fork(685x1150)	1		TX+FFL

Chapter 4: Mast system

01 Two stage mast (standard) (537846044001)

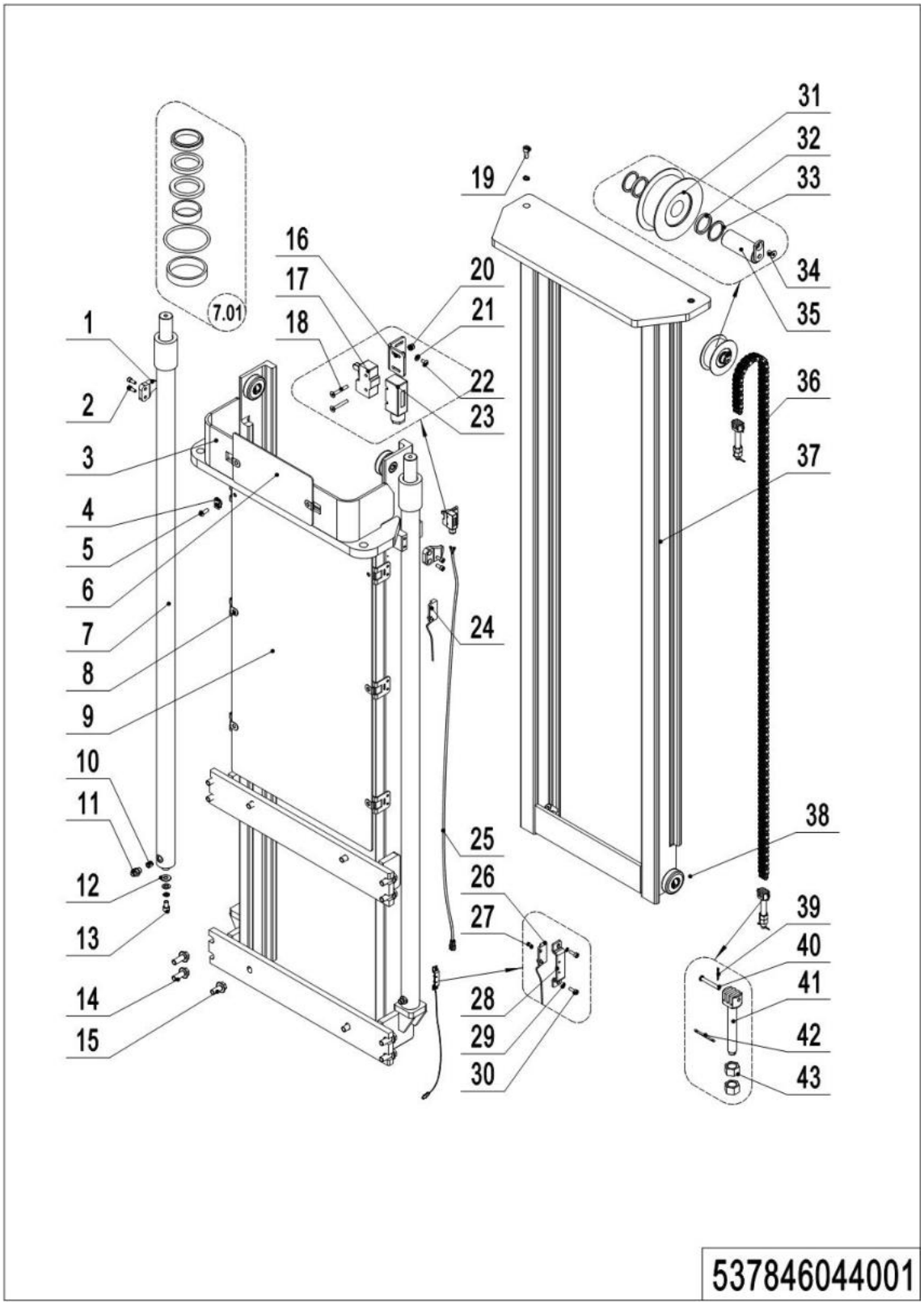

01 Two stage mast (standard) (537846044001)

No.	Item Code	Mark	Item Description	Qty.	Substitute	Note
1	275044020076		Fixing Plate	2		
2	910200200057		Screw	4		
3	534744010013		Outer Mast(2900)	1		
3	534744010012		Outer Mast(3200)	1		
3	534744010011		Outer Mast(3600)	1		
4	940400400003		Cage Nut	2		
5	941100100005		Screw	2		
6	534744520037		Guard Plate	1		
7	534744010008		Cylinder	2		**2900**
7	534744010007		Cylinder	2		**3200**
7	534744010006		Cylinder	2		**3600**
7.01	534798510005		Seal Kit	2		
8	940400300001		Spring Buckle	4		
8	940400300001		Spring Buckle	6		
9	534744020011		Guard Plate	1		**2900**
9	534744520038		Guard Plate	1		**3200**
9	534744020006		Guard Plate	1		**3600**
10	950600300001		Safety Valve	2		
11	950400400003		Joint	2		
12	534744520015		Subplate	2		
13	910200200096		Screw	2		
14	910100800006		Bolt	8		
15	910100800005		Bolt	4		
16	534744520036		Fixing Plate	1		
17	920200300001		Microswitch	1		
18	910200400007		Screw	2		
19	910200200097		Screw	2		
20	910300500001		Nut	2		
21	910400100003		Flat Washer	2		
22	910200300005		Screw	2		

1= Supply as package. 2= Supply with constraints. 3= Phasing-out supply. 4= Supply as assembly. 5= Check other tables.

01 Two stage mast (standard) (537846044001) continuation

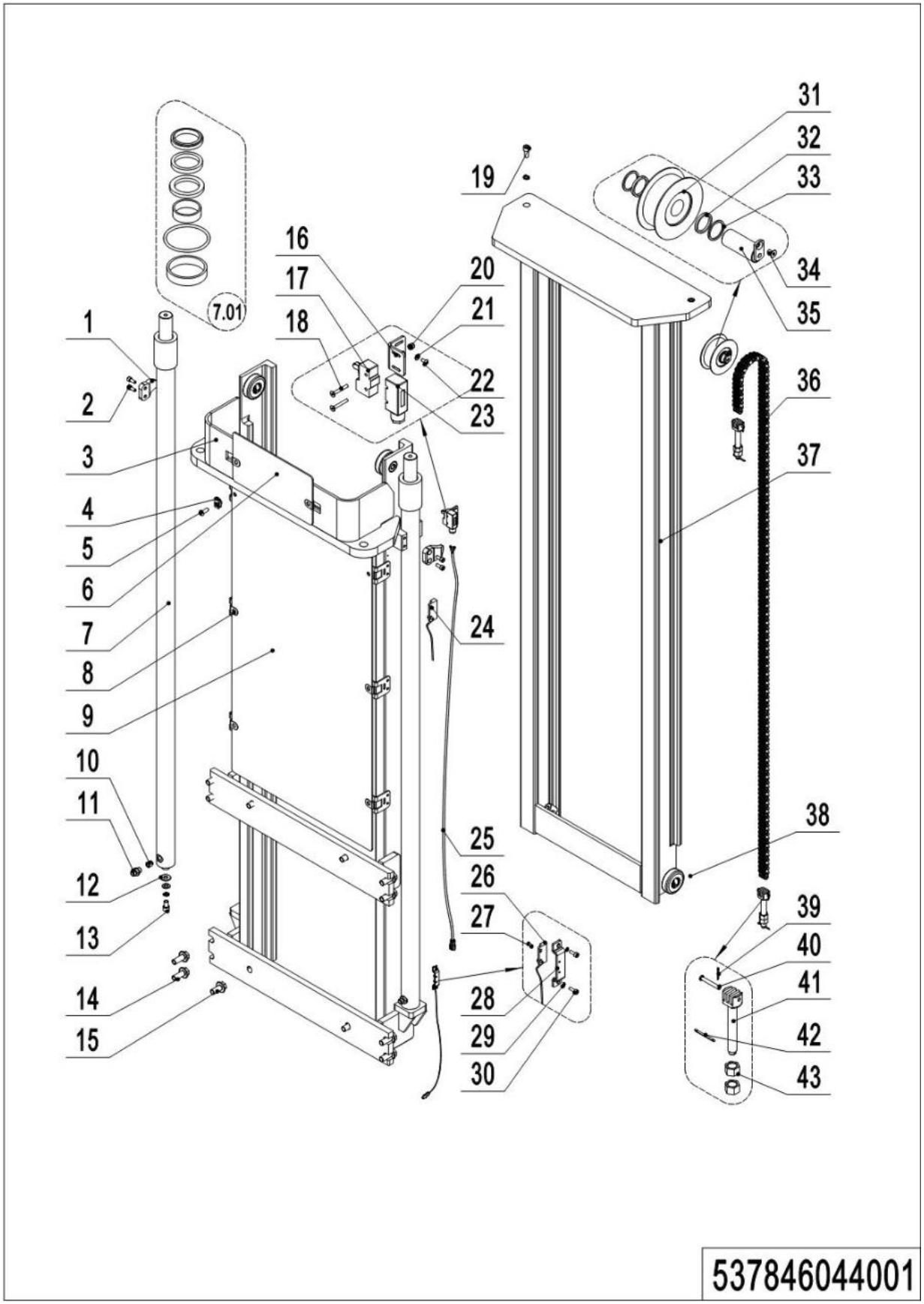

01 Two stage mast (standard) (537846044001) continuation

No.	Item Code	Mark	Item Description	Qty.	Substitute	Note
23	920200300008		Protective Cover	1		
24	537833010044		Switch	1		**2900**
24	537833010043		Switch	1		**3200**
24	537833010041		Switch	1		**3600**
24	535933510021		Switch	1		**EN1175-2020**
25	537833010053		Wire Harness	1		**2900**
25	537833010052		Wire Harness	1		**3200**
25	537833010050		Wire Harness	1		**3600**
25	535933510025		Wire Harness	1		**EN1175-2020**
26	537833010039		Switch	1		
26	535933510020		Switch	1		**EN1175-2020**
27	910200500010		Screw	4		
28	534744520059		Protective Cover	2		
29	910400500003		Spring Washer	4		
30	910200200014		Screw	4		
31	940200500010		Sprocket Bearing	1		
32	940600500009		Washer	2		
33	940600500008		Washer	2		
34	910200400016		Screw	1		
35	533544510006		Pin	1		
36	534744010010		Chain	1		**2900**
36	532944010015		Chain	1		**3200**
36	534744010009		Chain	1		**3600**
37	534744010016		Inner Mast(2900)	1		
37	534744010015		Inner Mast(3200)	1		
37	534744010014		Inner Mast(3600)	1		
38	940200300004		Compound Roller	4		
39	910600600006		Cotter Pin	2		
40	941100800012		Pin	2		
41	532644520038		Chain Anchor	2		
42	910600600023		Cotter Pin	2		
43	910300200008		Nut	4		

02 Two stage mast (FFL) (537846043501)

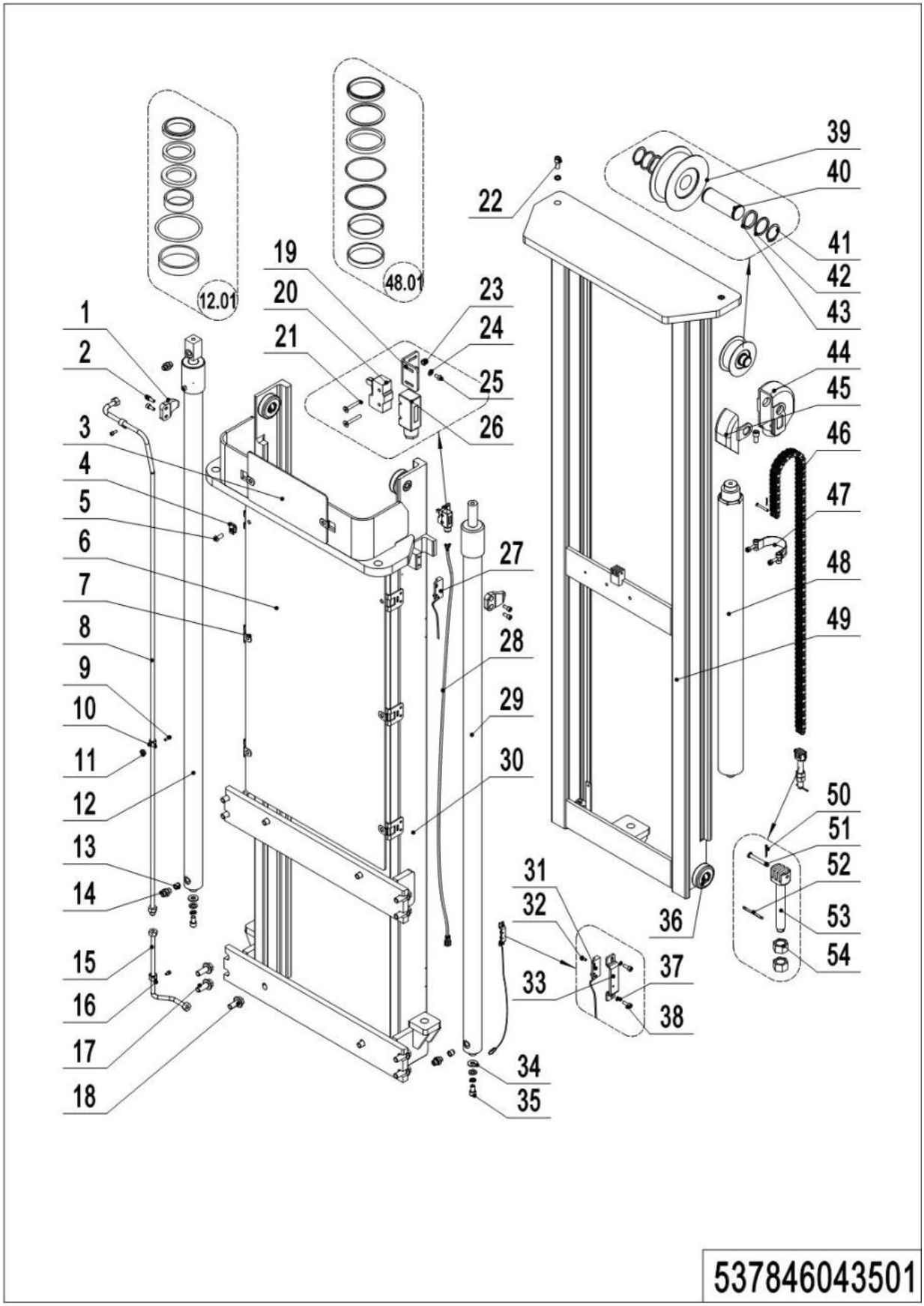

02 Two stage mast (FFL) (537846043501)

No.	Item Code	Mark	Item Description	Qty.	Substitute	Note
1	275044020076		Fixing Plate	2		
2	910200200057		Screw	4		
3	534744520037		Guard Plate	1		
4	940400400003		Cage Nut	2		
5	941100100005		Screw	2		
6	534744020011		Guard Plate	1		**2900**
6	534744520038		Guard Plate	1		**3200**
6	534744020006		Guard Plate	1		**3600**
7	940400300001		Spring Buckle	4		
7	940400300001		Spring Buckle	6		
8	534743510017		Steel Tube	1		**2900**
8	534743510016		Steel Tube	1		**3200**
8	534743510015		Steel Tube	1		**3600**
9	910200200035		Screw	2		
10	951000100001		Hose Clamp	2		
11	940600500001		Washer	2		
12	534743510008		Cylinder	1		**2900**
12	534743510007		Cylinder	1		**3200**
12	534743510006		Cylinder	1		**3600**
12.01	534798510002		Seal Kit	2		**Also for cylinder 29**
13	950600300001		Safety Valve	3		
14	950400400003		Joint	4		
15	534743510018		Steel Tube	1		
16	951000100003		Hose Clamp	1		
17	910100800006		Bolt	8		
18	910100800005		Bolt	4		
19	534744520036		Fixing Plate	1		
20	920200300001		Microswitch	1		
21	910200400007		Screw	2		
22	910200200097		Screw	3		

02 Two stage mast (FFL) (537846043501) continuation 1

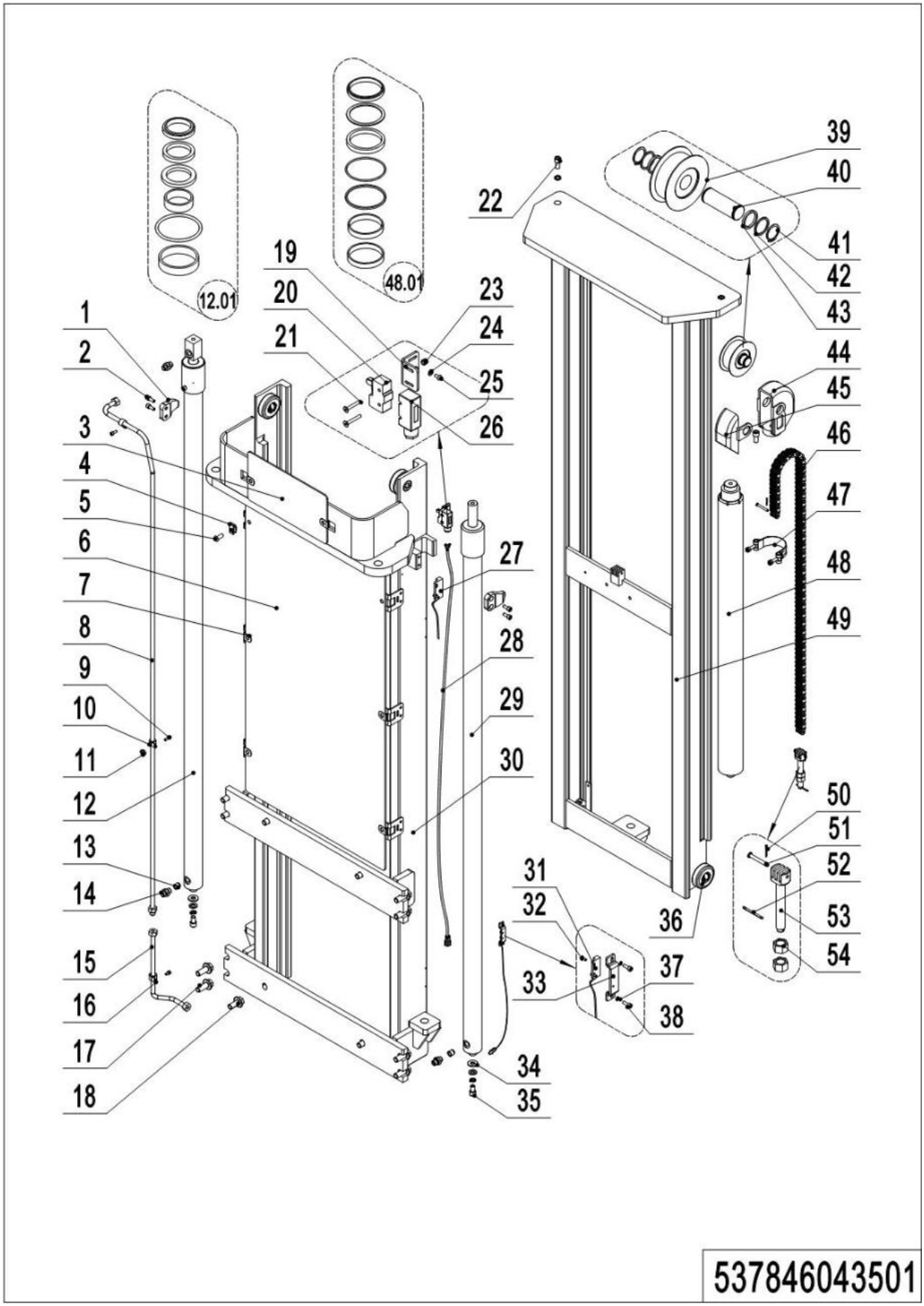

02 Two stage mast (FFL) (537846043501) continuation 1

No.	Item Code	Mark	Item Description	Qty.	Substitute	Note
23	910300500001		Nut	2		
24	910400100003		Flat Washer	2		
25	910200300005		Screw	2		
26	920200300008		Protective Cover	1		
27	537833010044		Switch	1		**2900**
27	537833010043		Switch	1		**3200**
27	537833010041		Switch	1		**3600**
27	535933510021		Switch	1		**EN1175-2020**
28	537833010053		Wire Harness	1		**2900**
28	537833010052		Wire Harness	1		**3200**
28	537833010050		Wire Harness	1		**3600**
28	535933510025		Wire Harness	1		**EN1175-2020**
29	534743510014		Cylinder	1		**2900**
29	534743510013		Cylinder	1		**3200**
29	534743510012		Cylinder	1		**3600**
30	534743510022		Outer Mast(2900)	1		
30	534743510021		Outer Mast(3200)	1		
30	534743510020		Outer Mast(3600)	1		
31	537833010039		Switch	1		
31	535933510020		Switch	1		**EN1175-2020**
32	910200500010		Screw	4		
33	534744520059		Protective Cover	2		
34	534744520015		Subplate	2		
35	910200200096		Screw	2		
36	940200300004		Compound Roller	4		
37	910400500003		Spring Washer	4		
38	910200200014		Screw	4		
39	940200500010		Sprocket Bearing	1		
40	532644520037		Axle	1		
41	910401300016		Circlip	2		

02 Two stage mast (FFL) (537846043501) continuation 2

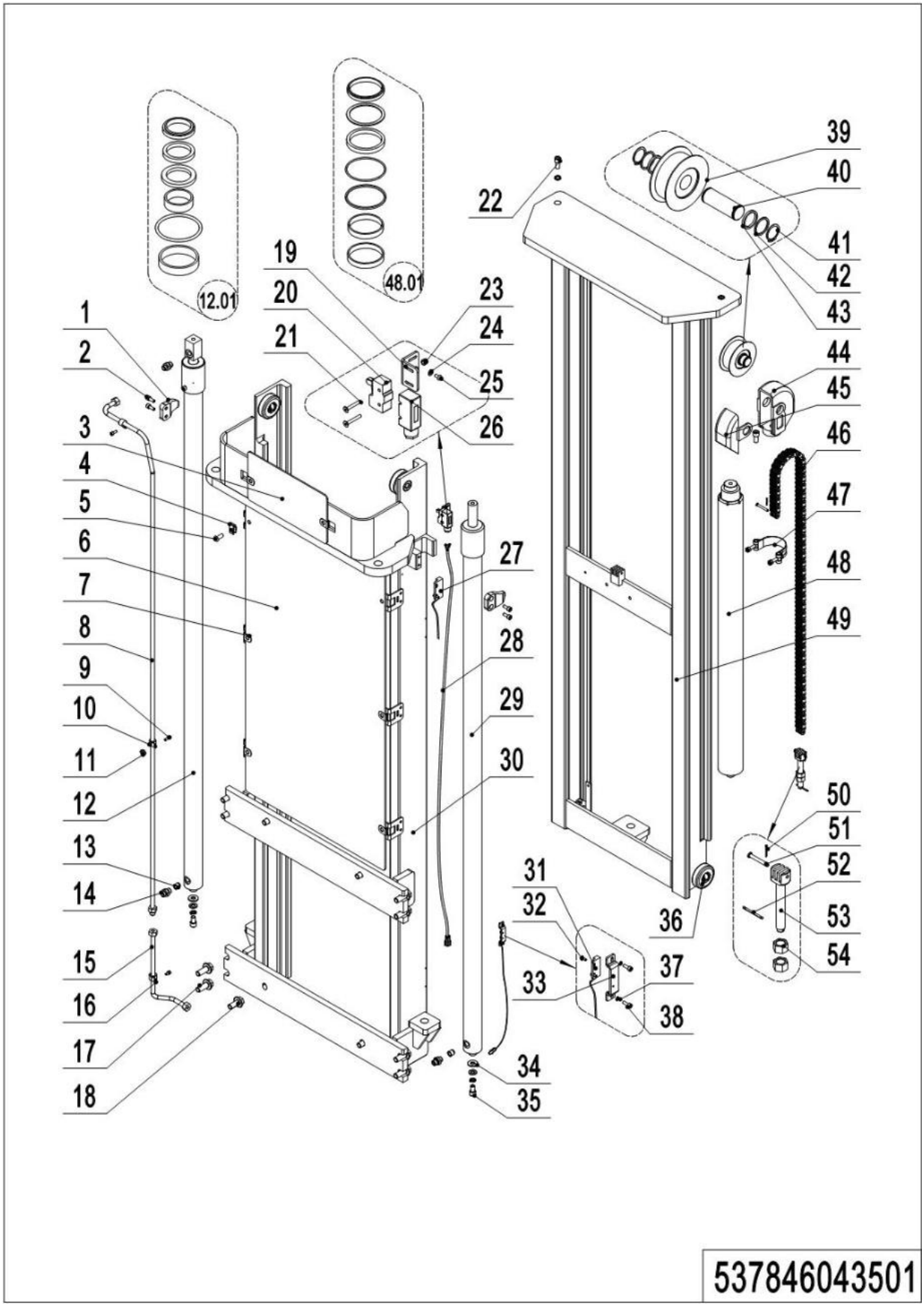

02 Two stage mast (FFL) (537846043501) continuation 2

No.	Item Code	Mark	Item Description	Qty.	Substitute	Note
42	940600500008		Washer	2		
43	940600500009		Washer	2		
44	532644520035		Yoke	1		
45	532644520036		Side Cover	1		
46	532644510077		Chain	1		**2900**
46	532644510083		Chain	1		**3200**
46	532644510073		Chain	1		**3600**
47	940800600002		Hoop	1		
48	534743510011		Cylinder	1		**2900**
48	534743510010		Cylinder	1		**3200**
48	534743510009		Cylinder	1		**3600**
48.01	534798510003		Seal Kit	1		
49	534743510025		Inner Mast(2900)	1		
49	534743510024		Inner Mast(3200)	1		
49	534743510023		Inner Mast(3600)	1		
50	910600600006		Cotter Pin	2		
51	941100800012		Pin	2		
52	910600600023		Cotter Pin	1		
53	532644520038		Chain Anchor	1		
54	910300200008		Nut	2		

03 Three stage mast (standard) (537846045001)

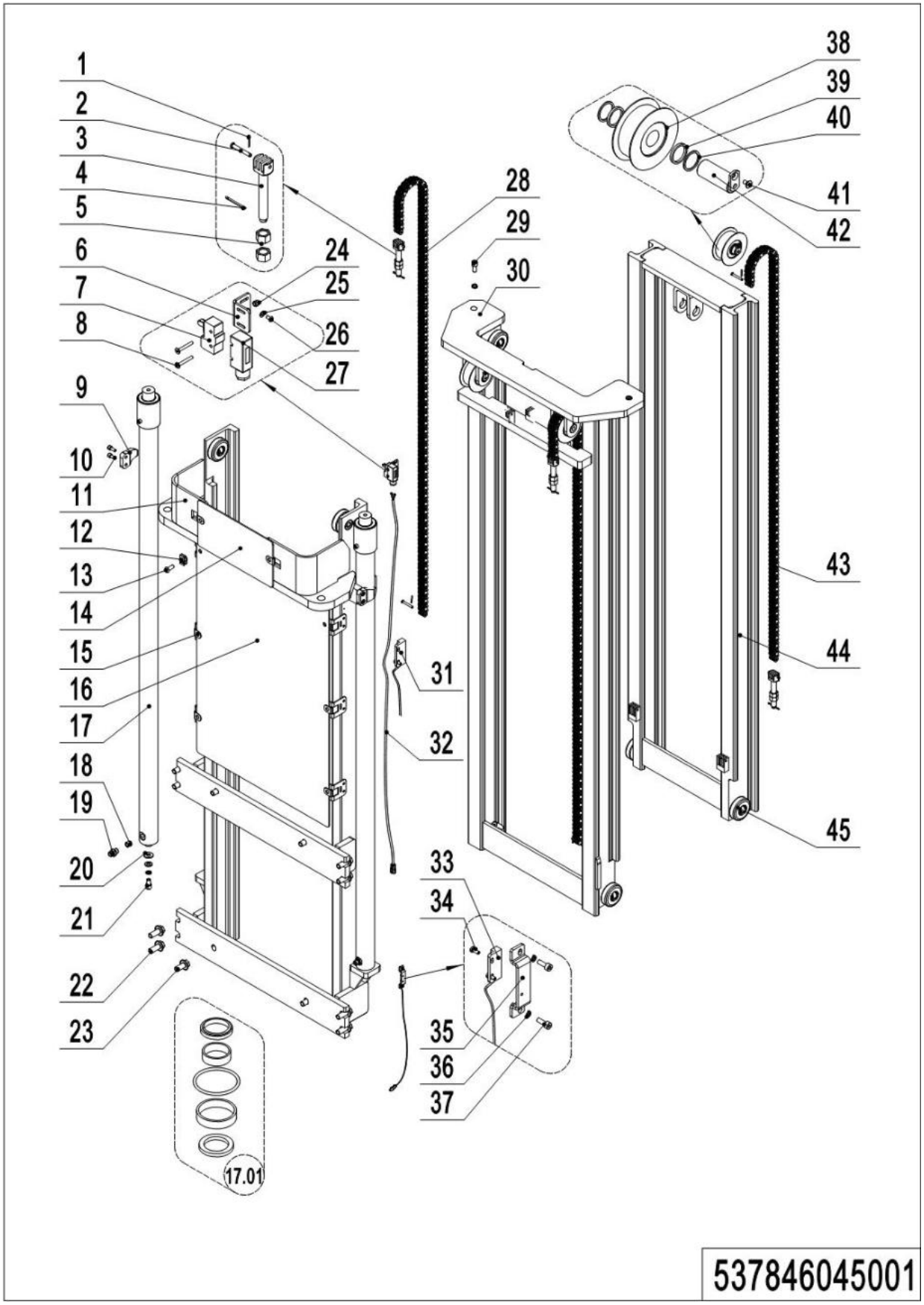

03 Three stage mast (standard) (537846045001)

No.	Item Code	Mark	Item Description	Qty.	Substitute	Note
1	910600600006		Cotter Pin	6		
2	941100800006		Pin	6		
2	941100800012		Pin	6		
3	532644520038		Chain Anchor	3		
4	910600600023		Cotter Pin	3		
5	910300200008		Nut	6		
6	534744520036		Fixing Plate	1		
7	920200300001		Microswitch	1		
8	910200400007		Screw	2		
9	275044020076		Fixing Plate	2		
10	910200200057		Screw	4		
11	534745010012		Outer Mast(4300)	1		
11	534745010010		Outer Mast(4600)	1		
12	940400400003		Cage Nut	2		
13	941100100005		Screw	2		
14	534744520037		Guard Plate	1		
15	940400300001		Spring Buckle	6		
16	534744520039		Guard Plate	1		**4300**
16	534744520038		Guard Plate	1		**4600**
17	534745010007		Cylinder	2		**4300**
17	534745010006		Cylinder	2		**4600**
17.01	534798510004		Seal Kit	2		
18	950600300001		Safety Valve	2		
19	950400400003		Joint	2		
20	534744520015		Subplate	2		
21	910200200096		Screw	2		
22	910100800006		Bolt	8		
23	910100800005		Bolt	4		
24	910200300005		Screw	2		
25	910400100003		Flat Washer	2		

1= Supply as package. 2= Supply with constraints. 3= Phasing-out supply. 4= Supply as assembly. 5= Check other tables.

03 Three stage mast (standard) (537846045001) continuation

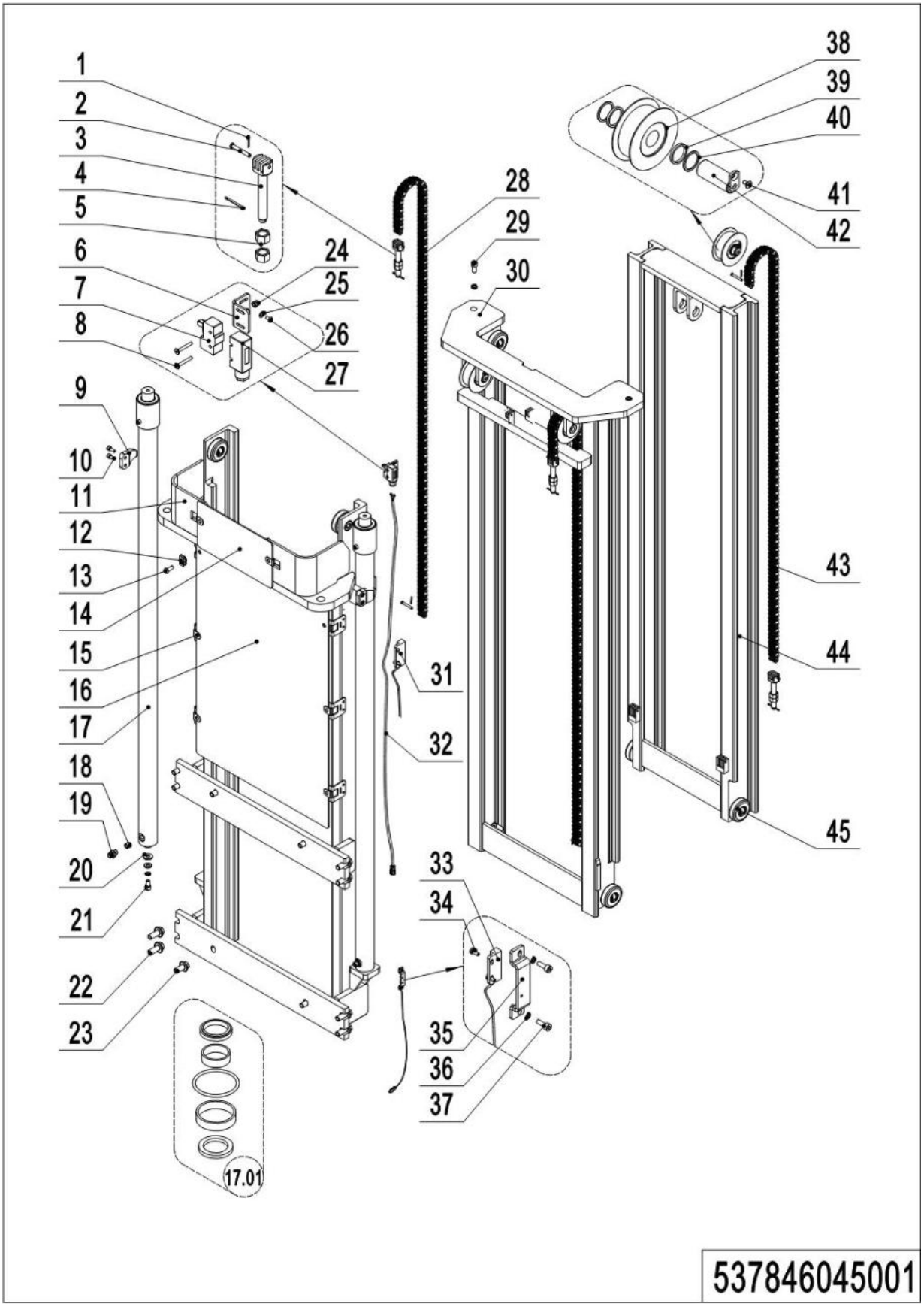

03 Three stage mast (standard) (537846045001) continuation

No.	Item Code	Mark	Item Description	Qty.	Substitute	Note
27	920200300008		Protective Cover	1		
28	534745010009		Chain	2		**4300**
28	534145010005		Chain	2		**4600**
29	910200200097		Screw	2		
30	534745010013		Middle Mast(4300)	1		
30	534745010011		Middle Mast(4600)	1		
31	537833010044		Switch	1		**4300**
31	537833010043		Switch	1		**4600**
31	535933510021		Switch	1		**EN1175-2020**
32	537833010053		Wire Harness	1		**4300**
32	537833010052		Wire Harness	1		**4600**
32	535933510025		Wire Harness	1		**EN1175-2020**
33	537833010039		Switch	1		
33	535933510020		Switch	1		**EN1175-2020**
34	910200500010		Screw	4		
35	534744520059		Protective Cover	2		
36	910400500003		Spring Washer	4		
37	910200200014		Screw	4		
38	940200500010		Sprocket Bearing	3		
39	940600500009		Washer	6		
40	940600500008		Washer	6		
41	910200400016		Screw	3		
42	535045010008		Pin	3		
43	535044510020		Chain	1		**4300**
43	534745010008		Chain	1		**4600**
44	534745010005		Inner Mast(4300)	1		
44	534745010004		Inner Mast(4600)	1		
45	940200300004		Compound Roller	8		

04 Three stage mast (FFL) (537846044501)

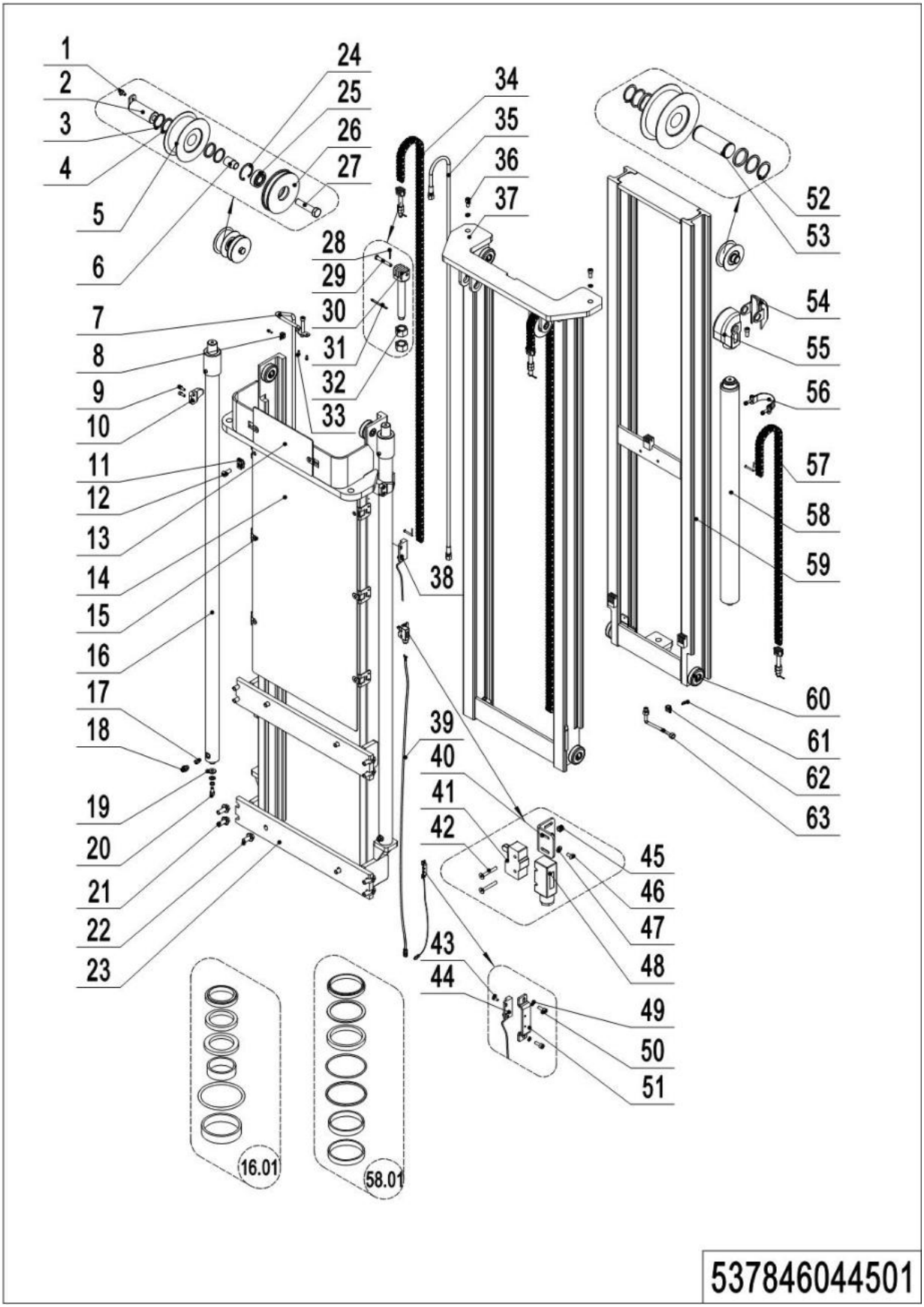

1= Supply as package. 2= Supply with constraints. 3= Phasing-out supply. 4= Supply as assembly. 5= Check other tables.

04 Three stage mast (FFL) (537846044501)

No.	Item Code	Mark	Item Description	Qty.	Substitute	Note
1	910200400016		Screw	2		
2	533544510006		Pin	2		
3	940200500010		Sprocket Bearing	3		
4	940600500009		Washer	6		
5	940600500008		Washer	6		
6	535944520001		Sleeve	1		
7	534744510023		Steel Tube	1		**4000**
7	534744510021		Steel Tube	1		**4300**
7	534744510020		Steel Tube	1		**4600**
7	534744510022		Steel Tube	1		**5300**
7	534744520045		Steel Tube	1		**5500**
8	951000100001		Hose Clamp	2		
9	910200200057		Screw	4		
10	275044020076		Fixing Plate	2		
11	940400400003		Cage Nut	2		
12	941100100005		Screw	2		
13	534744520037		Guard Plate	1		
14	534744520041		Guard Plate	1		**4000**
14	534744520039		Guard Plate	1		**4300**
14	534744520038		Guard Plate	1		**4600**
14	534744520040		Guard Plate	1		**5300**
14	534744520052		Guard Plate	1		**5500**
15	940400300001		Spring Buckle	4		
15	940400300001		Spring Buckle	6		
16	534744510019		Cylinder	2		**4000**
16	534744510017		Cylinder	2		**4300**
16	534744510016		Cylinder	2		**4600**
16	534744510018		Cylinder	2		**5300**
16	534744510028		Cylinder	2		**5500**

04 Three stage mast (FFL) (537846044501) continuation 1

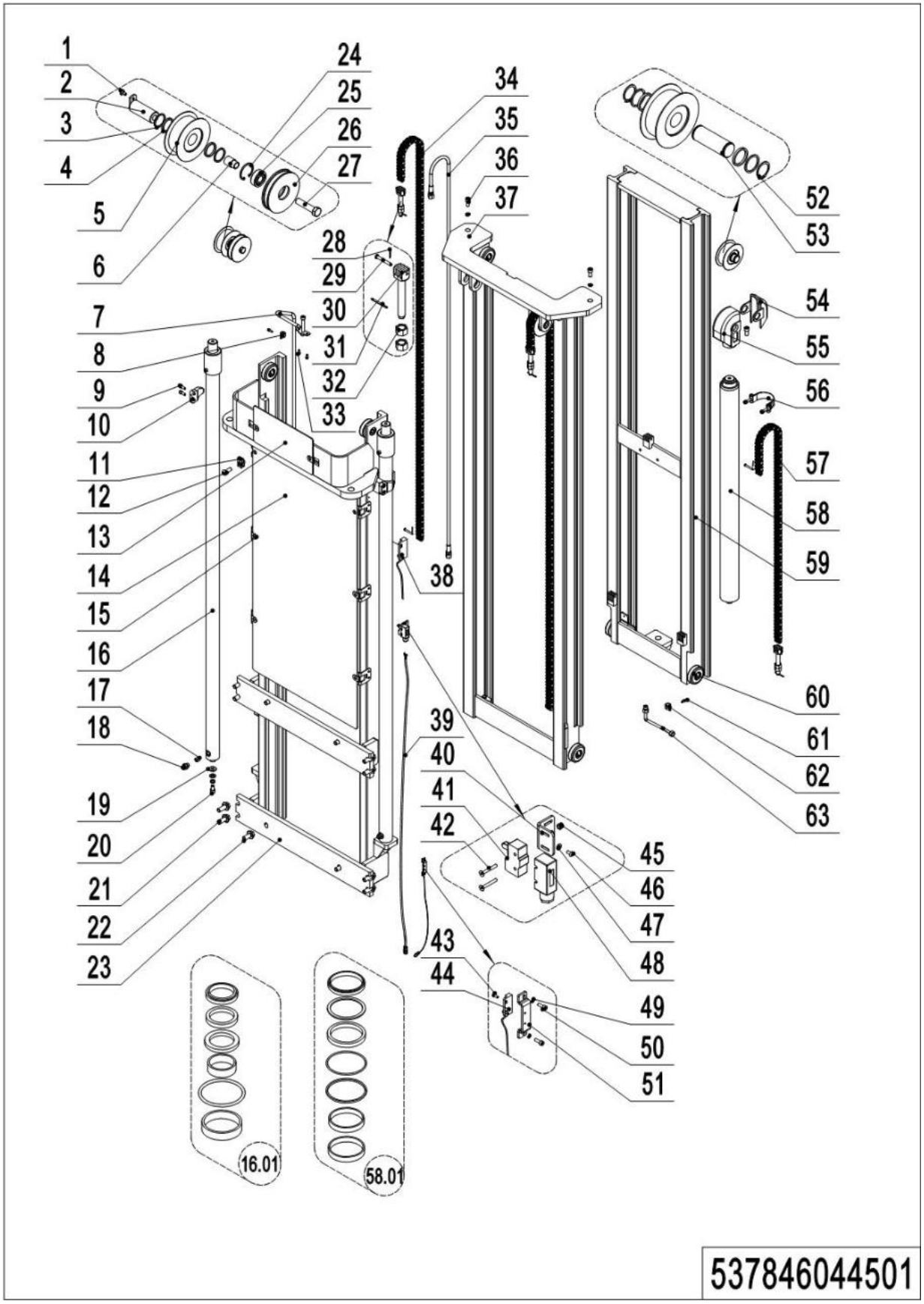

04 Three stage mast (FFL) (537846044501) continuation 1

No.	Item Code	Mark	Item Description	Qty.	Substitute	Note
16.01	534798510000		Seal Kit	2		
17	950600300001		Safety Valve	3		
18	950400400003		Joint	3		
19	534744520015		Subplate	2		
20	910200200096		Screw	2		
21	910100800006		Bolt	8		
22	910100800005		Bolt	4		
23	534744510039		Outer Mast(4000)	1		
23	534744510037		Outer Mast(4300)	1		
23	534744510030		Outer Mast(4600)	1		
23	534744510035		Outer Mast(5300)	1		
23	534744510032		Outer Mast(5500)	1		
24	910401400013		Circlip	1		
25	910700200019		Bearing	1		
26	535944520000		Pulley	1		
27	910100100073		Bolt	1		
28	910600600006		Cotter Pin	6		
29	941100800012		Pin	6		
30	941300100008		Chain Bolt	3		
31	910600600023		Cotter Pin	3		
32	910300200008		Nut	6		
33	910200400006		Screw	2		
34	534744510047		Chain	2		**4000**
34	534745010009		Chain	2		**4300**
34	534145010005		Chain	2		**4600**
34	534744010009		Chain	2		**5300**
34	535044510031		Chain	2		**5500**
35	534744520043		Hose	1		**4000**
35	532644520143		Hose	1		**4300**

1= Supply as package. 2= Supply with constraints. 3= Phasing-out supply. 4= Supply as assembly. 5= Check other tables.

04 Three stage mast (FFL) (537846044501) continuation 2

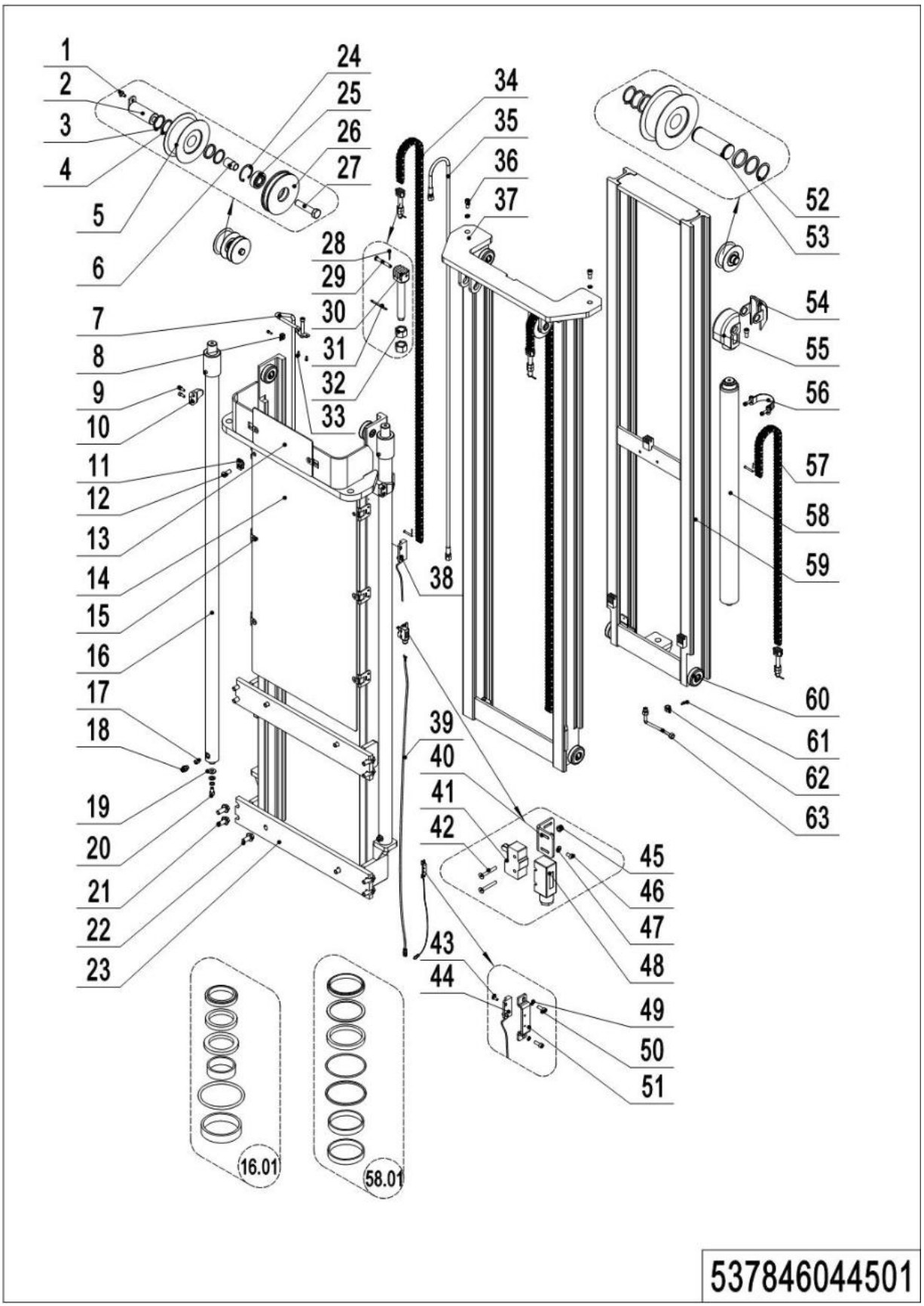

04 Three stage mast (FFL) (537846044501) continuation 2

No.	Item Code	Mark	Item Description	Qty.	Substitute	Note
35	532644520144		Hose	1		**4600**
35	534744520050		Hose	1		**5300**
35	534744520044		Hose	1		**5500**
36	910200200097		Screw	3		
37	534744510040		Middle Mast(4000)	1		
37	534744510038		Middle Mast(4300)	1		
37	534744510031		Middle Mast(4600)	1		
37	534744510036		Middle Mast(5300)	1		
37	534744510033		Middle Mast(5500)	1		
38	537833010045		Switch	1		**4000**
38	537833010044		Switch	1		**4300**
38	537833010043		Switch	1		**4600**
38	537833010041		Switch	1		**5300**
38	537833010040		Switch	1		**5500**
38	535933510021		Switch	1		**EN1175-2020**
39	537833010054		Wire Harness	1		**4000**
39	537833010053		Wire Harness	1		**4300**
39	537833010052		Wire Harness	1		**4600**
39	537833010050		Wire Harness	1		**5300**
39	537833010049		Wire Harness	1		**5500**
39	535933510025		Wire Harness	1		**EN1175-2020**
40	534744520036		Fixing Plate	1		
41	920200300001		Microswitch	1		
42	910200400007		Screw	4		
43	910200500010		Screw	4		
44	537833010039		Switch	1		
44	535933510020		Switch	1		**EN1175-2020**
45	910300500001		Nut	4		
46	910200300005		Screw	4		

04 Three stage mast (FFL) (537846044501) continuation 3

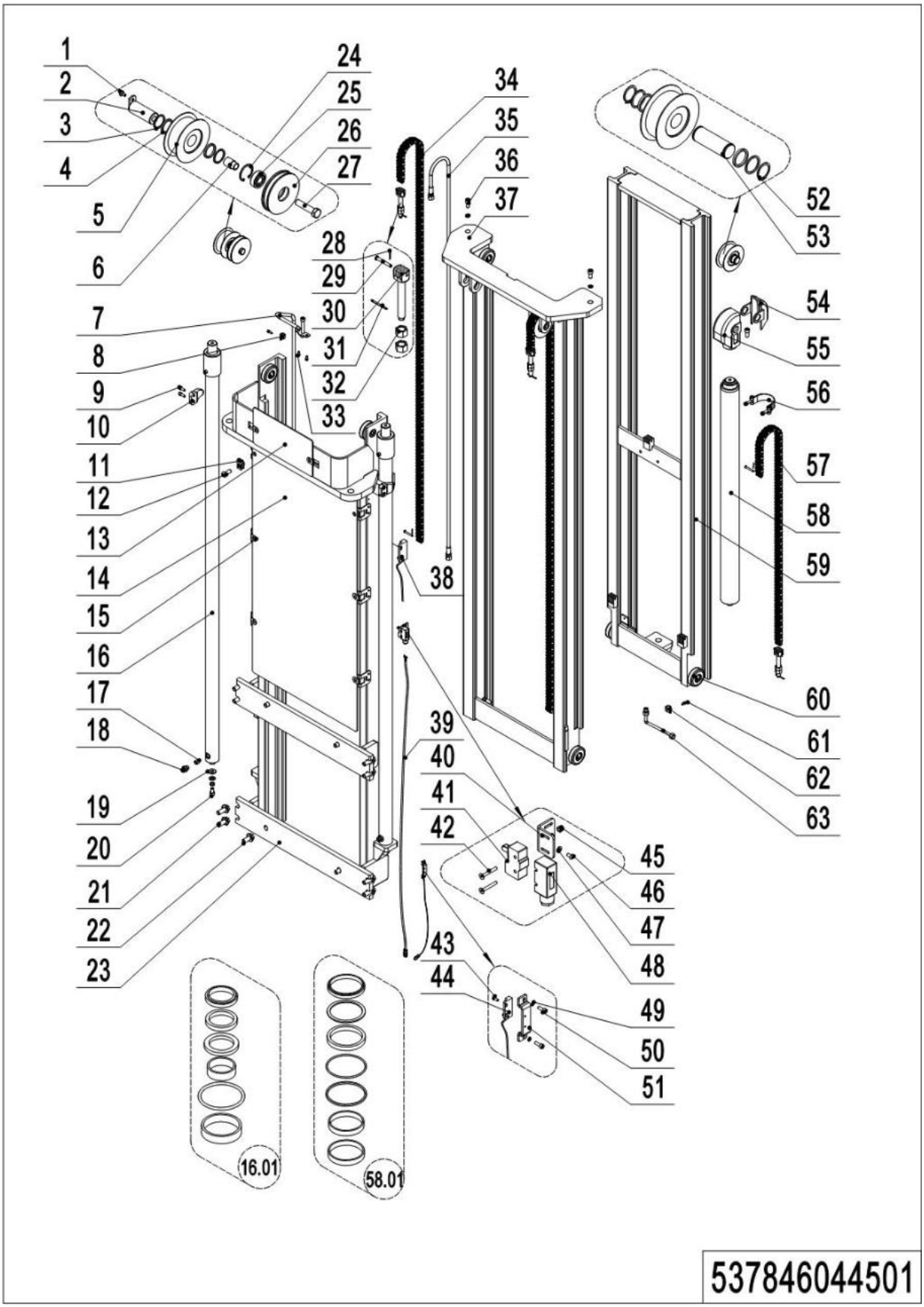

04 Three stage mast (FFL) (537846044501) continuation 3

No.	Item Code	Mark	Item Description	Qty.	Substitute	Note
47	910400100003		Flat Washer	4		
48	920200300008		Protective Cover	1		
49	910400500003		Spring Washer	4		
50	910200200014		Screw	4		
51	534744520059		Protective Cover	2		
52	910401300016		Circlip	2		
53	532644520037		Axle	1		
54	532644520036		Side Cover	1		
55	532644520035		Yoke	1		
56	940800600002		Hoop	1		
57	534743510019		Chain	1		**4000**
57	532644510077		Chain	1		**4300**
57	251044510096		Chain	1		**4600**
57	532644510073		Chain	1		**5300**
57	535944510000		Chain	1		**5500**
58	534744510015		Cylinder	1		**4000**
58	534744510013		Cylinder	1		**4300**
58	534744510012		Cylinder	1		**4600**
58	534744510014		Cylinder	1		**5300**
58	534744510029		Cylinder	1		**5500**
58.01	534798510001		Seal Kit	1		
59	534744510011		Inner Mast(4000)	1		
59	534744510009		Inner Mast(4300)	1		
59	534744510008		Inner Mast(4600)	1		
59	534744510010		Inner Mast(5300)	1		
59	534744510034		Inner Mast(5500)	1		
60	940200300004		Compound Roller	8		
61	910200200032		Screw	1		
62	951000100003		Hose Clamp	1		
63	533544520006		Steel Tube	1		

Chapter 5: Steering system, braking system and wheels

01 Tiller (535946011001)

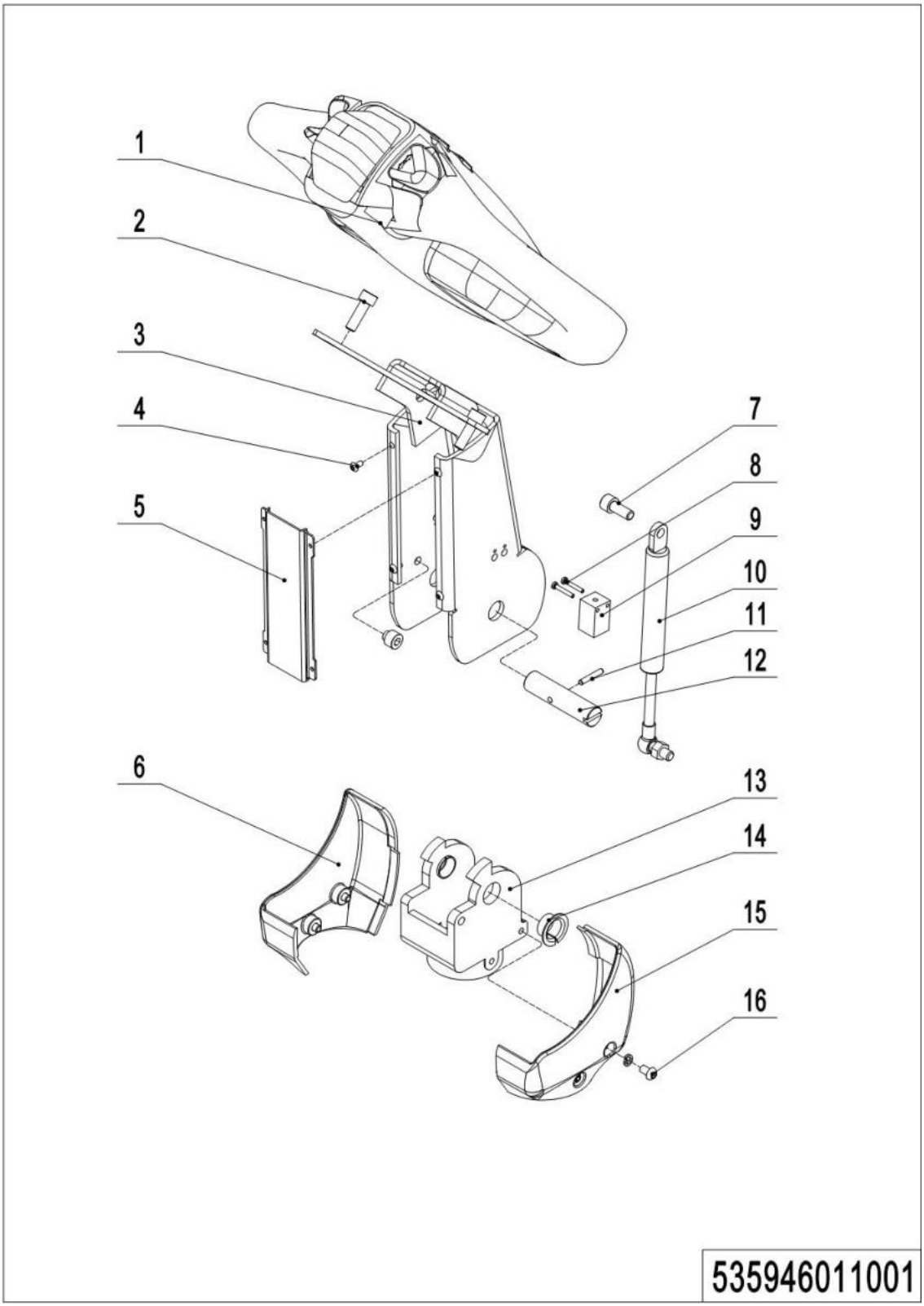

01 Tiller (535946011001)

No.	Item Code	Mark	Item Description	Qty.	Substitute	Note
1	----------		Tiller	1		See 535946011002
1	----------		Tiller (EN1175-2020)	1		See 535946011003
2	910200200058		Screw	2		
3	535911010000		Tiller	1		
3	535911010001		Tiller	1		Short tiller
4	910200300005		Screw	4		
5	535911020003		Close Plate	1		
5	535911020008		Close Plate	1		Short tiller
6	535911020005		Protective Cover	1		
7	910200200057		Screw	1		
8	910200500015		Screw	2		
9	506733510002		Proximity Switch	1		
10	940400100001		Air Spring	1		
10	940400100045		Air Spring	1		Short tiller
11	910600400013		Spring Pin	1		
12	505611020008		Axle	1		
13	535911020004		Bracket	1		
13	535911020009		Bracket	1		Short tiller
14	940500200002		Bushing	2		
15	535911020006		Protective Cover	1		
16	910200300016		Screw	4		

02 Tiller (535946011002)

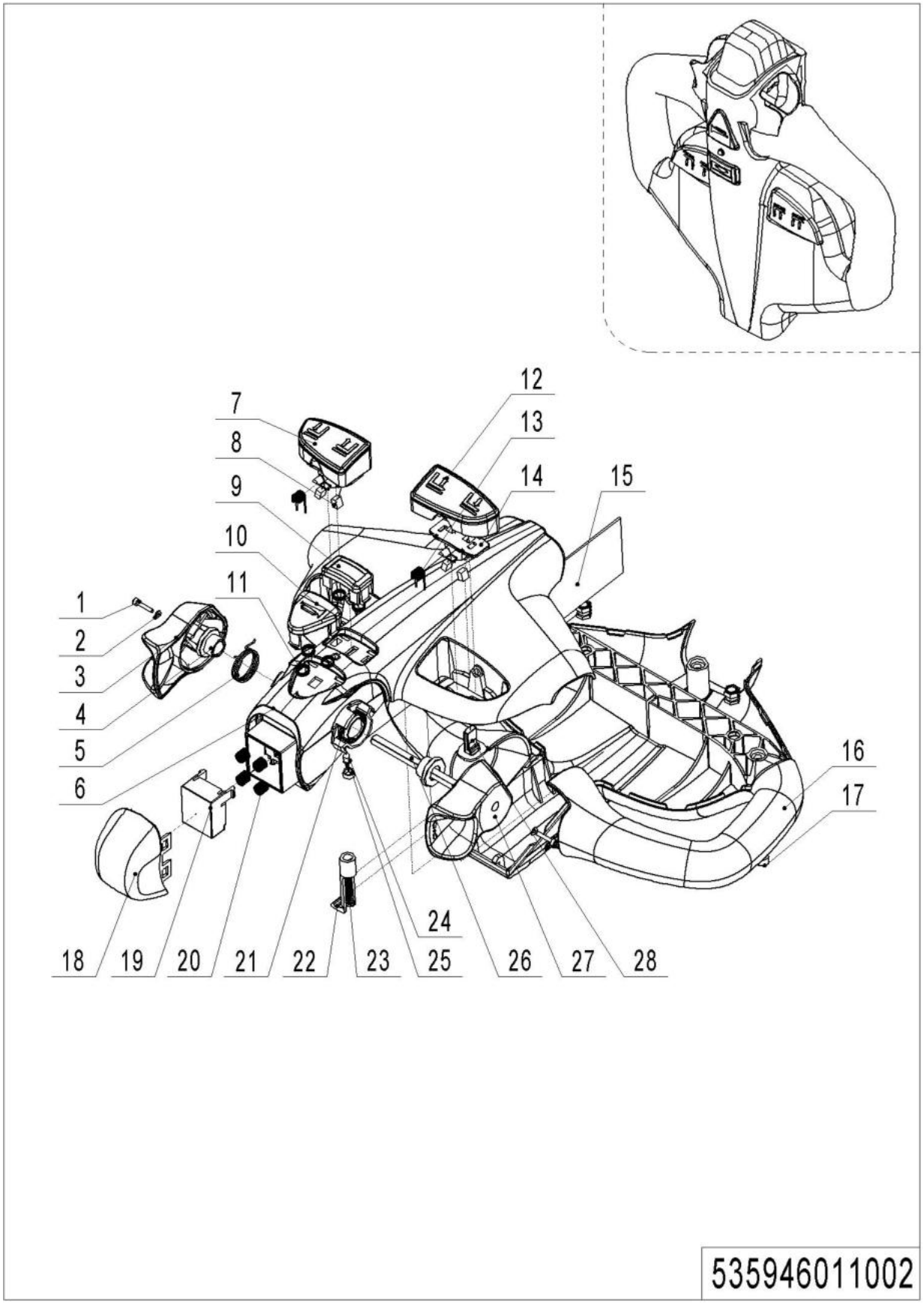

1= Supply as package. 2= Supply with constraints. 3= Phasing-out supply. 4= Supply as assembly. 5= Check other tables.

02 Tiller (535946011002)

No.	Item Code	Mark	Item Description	Qty.	Substitute	Note
--	922100100007		Control Handle	1		
1	505698520008		Screw	2		
2	505698520009		Washer	2		
3	505698520001		Traction lever	1		
4	505698520004		Sleeve	2		
5	505698520027		Torsional Spring	1		
6	505698520014		Handle Cap	1		
7	505698520016		Button cap	1		
8	505698520005		Magnet	4		
9	505698520021		Button Cap	1		
10	505698520002		Horn Button	1		
11	505698520003		Spring	5		
12	505698520022		Button Cap	1		
13	505698520018		Torsional Spring	2		
14	505698520017		Fixing Base	2		
15	505698520028		circuit Board	1		
16	505698520015		Handle Cap	1		
17	505698520007		Screw	3		
18	505698520020		Button Cap-	1		
19	505698520019		Pedestal	1		
20	505698520006		Spring	4		
21	505698520026		Torsional Spring	1		
22	505698520012		Clamp	1		
23	505698520023		Screw	1		
24	505698520024		Light	1		
25	505698520025		Lamp Holder	1		
26	505698520011		Axle-Traction lever	1		
27	505698520010		Traction lever	1		
28	505698520013		Sensor	2		

1= Supply as package. 2= Supply with constraints. 3= Phasing-out supply. 4= Supply as assembly. 5= Check other tables.

03 Tiller (EN1175-2020)(535946011010)

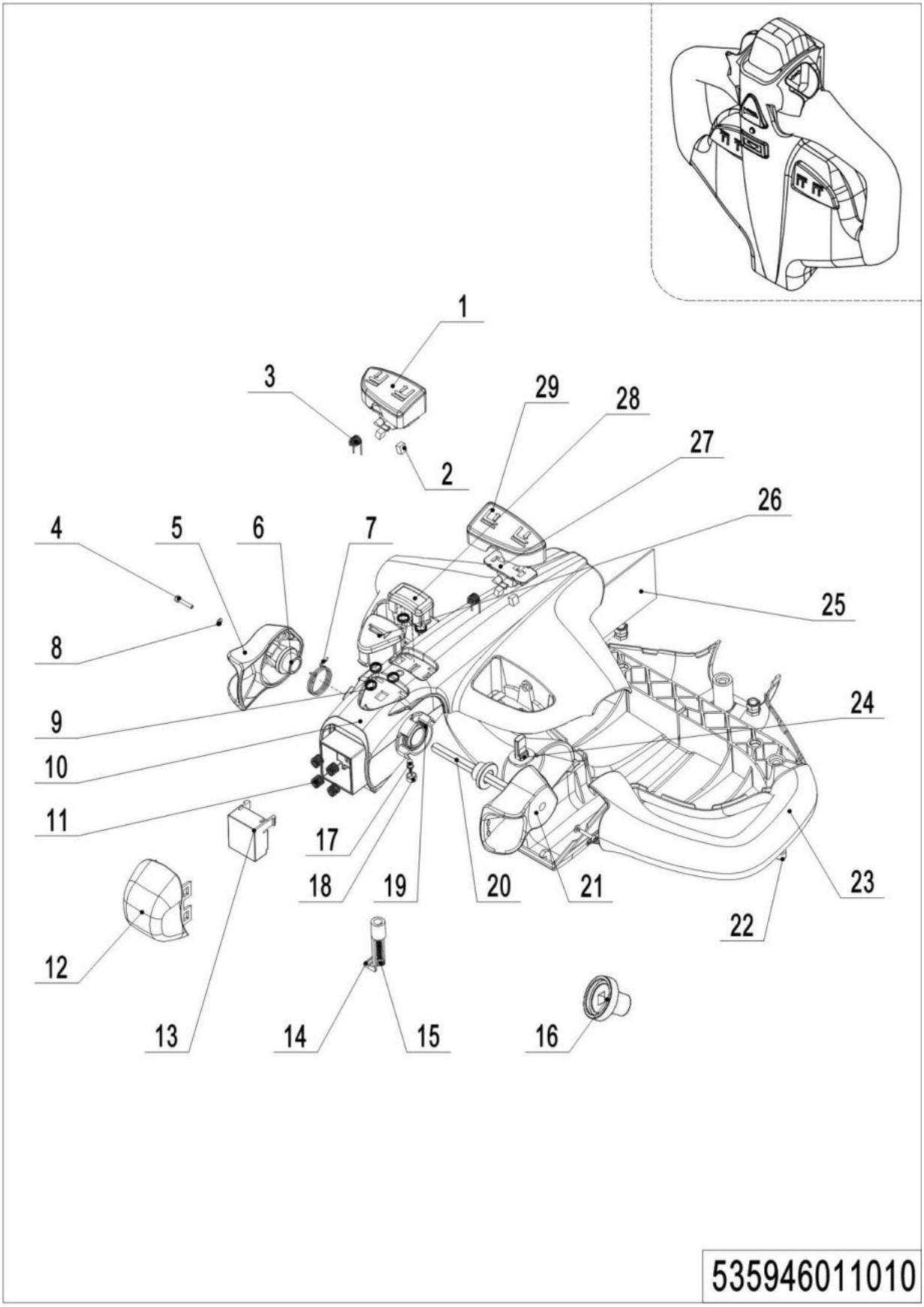

1= Supply as package. 2= Supply with constraints. 3= Phasing-out supply. 4= Supply as assembly. 5= Check other tables.

03 Tiller (EN1175-2020) (535946011010)

No.	Item Code	Mark	Item Description	Qty.	Substitute	Note
--	922100100099-T02		Control Handle	1		
1	505698520016		Button cap	1		
2	505698520005		Magnet	4		
3	505698520018		Torsional Spring	2		
4	505698520008		Screw	2		
5	505698520001		Traction lever	1		
6	505698520004		Sleeve	2		
7	505698520027		Torsional Spring	1		
8	505698520009		Washer	2		
9	505698520003		Spring	5		
10	505698520099		O-Ring	1		
11	505698520006		Spring	4		
12	505698520020		Button Cap-	1		
13	505698520100		Paper Washer	1		
14	505698520012		Clamp	1		
15	505698520023		Screw	1		
16	505698520102		Gear	2		
17	505698520024		Light	1		
18	505698520025		Lamp Holder	1		
19	505698520026		Torsional Spring	1		
20	505698520011		Axle-Traction lever	1		
21	505698520010		Traction lever	1		
22	505698520007		Screw	3		
23	505698520015		Handle Cap	1		
24	505698520013		Sensor	2		
25	505698520101		Flange	1		
26	505698520002		Horn Button	1		
27	505698520017		Fixing Base	2		
28	505698520021		Button Cap	1		
29	505698520022		Button Cap	1		

1= Supply as package. 2= Supply with constraints. 3= Phasing-out supply. 4= Supply as assembly. 5= Check other tables.

04 Load wheel (532946017001)

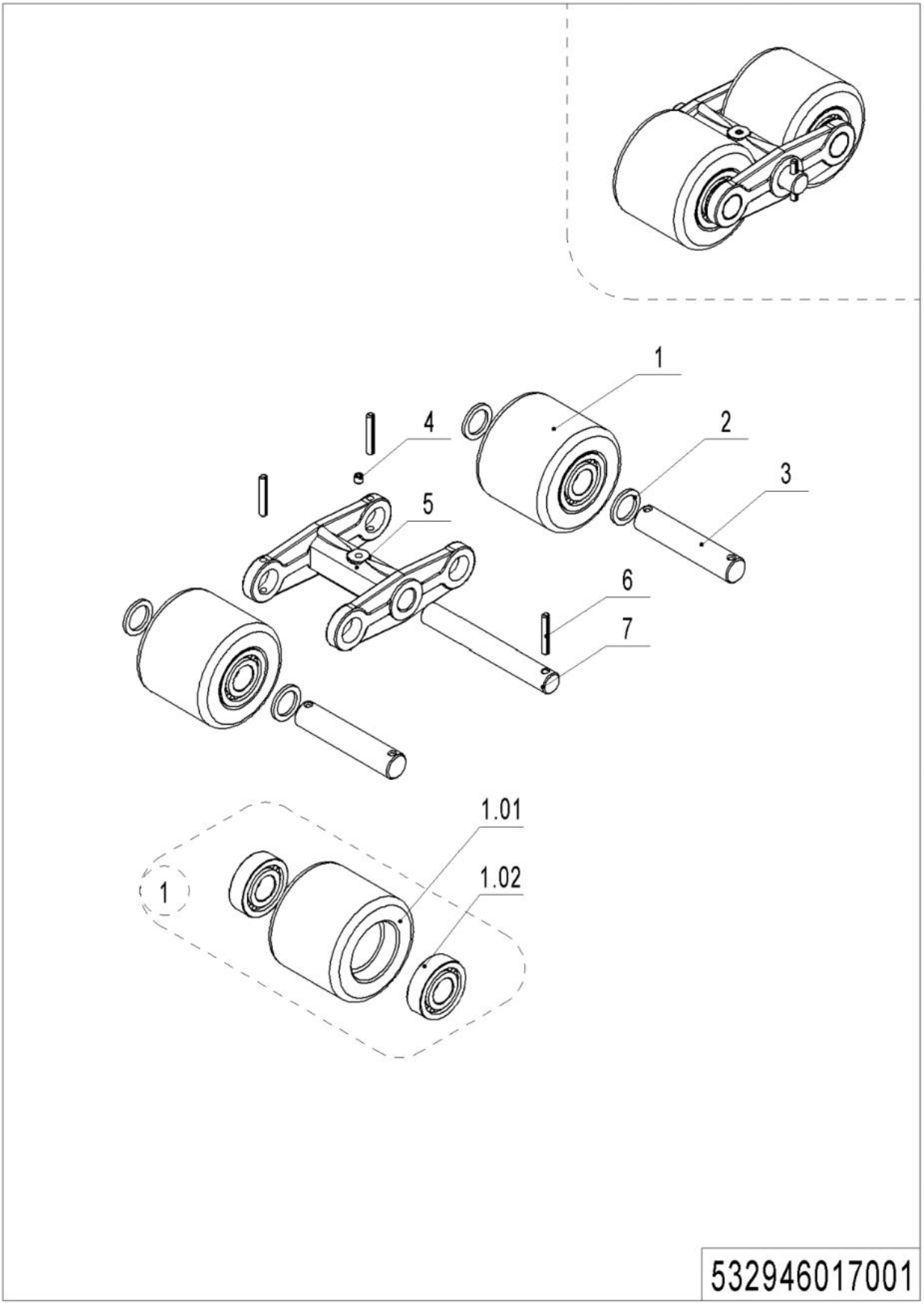

1= Supply as package. 2= Supply with constraints. 3= Phasing-out supply. 4= Supply as assembly. 5= Check other tables.

04 Load wheel (532946017001)

No.	Item Code	Mark	Item Description	Qty.	Substitute	Note
--	532998510000		Wheel	2		
1	532998510001		Wheel	4		
1.01	940300300009		WheelΦ84x70	4		
1.02	910700200019		Bearing	8		
2	940600500004		Washer	8		
3	504117020005		Axle	4		
4	911200100001		Oil Cup	2		
5	504117020004		Wheel Carrier	2		
6	910600400027		Spring Pin	6		
7	504117020003		Axle	2		

05 Side wheel (532646016501)

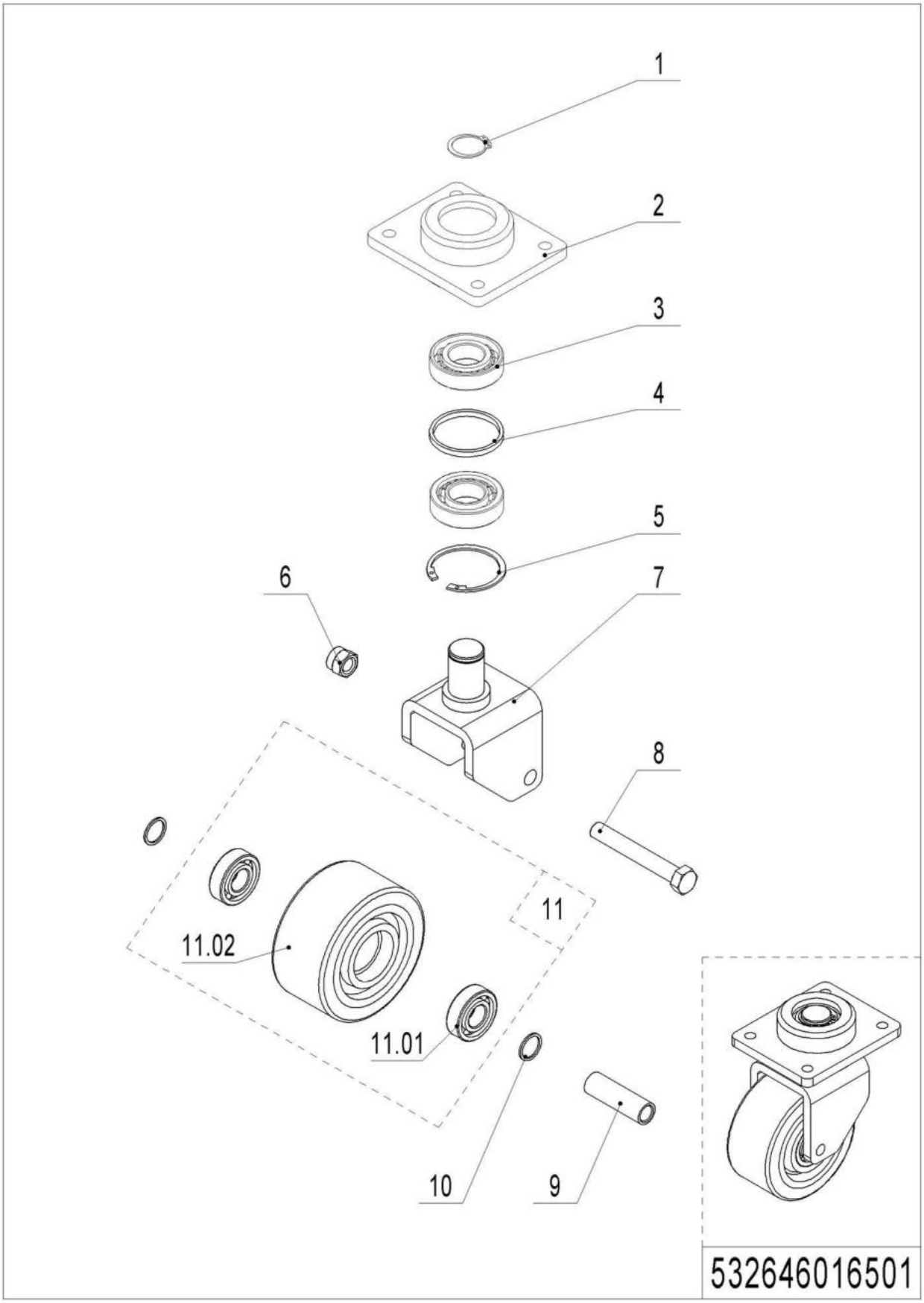

1= Supply as package. 2= Supply with constraints. 3= Phasing-out supply. 4= Supply as assembly. 5= Check other tables.

05 Side wheel (532646016501)

No.	Item Code	Mark	Item Description	Qty.	Substitute	Note
--	532616510000		Caster Assembly	2		
1	910401300016		Circlip	1		
2	532616520002		Bracket	1		
3	910700400004		Bearing	2		
4	532616520001		Check Ring	1		
5	910401400018		Circlip	1		
6	910300500007		Nut	1		
7	532616510001		Wheel Carrier	1		
8	910100100069		Bolt	1		
9	532616520003		Bushing	1		
10	940600500014		Washer	2		
11	532698510004		Wheel	1		
11.01	910700200019		Bearing	2		
11.02	940300300019		WheelΦ124x60	1		

06 Steering unit (EPS) (537846031201)

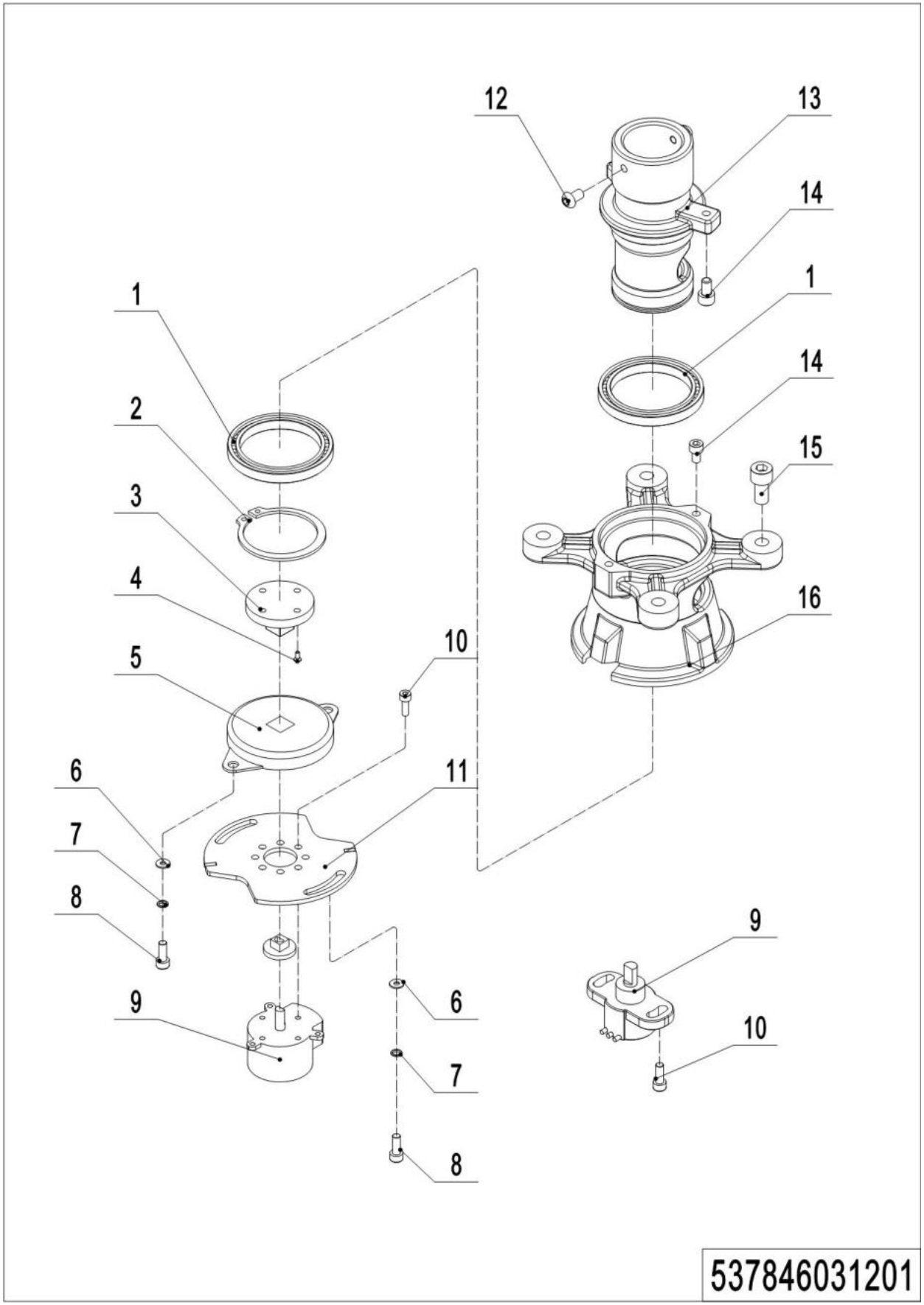

1= Supply as package. 2= Supply with constraints. 3= Phasing-out supply. 4= Supply as assembly. 5= Check other tables.

06 Steering unit (EPS) (537846031201)

No.	Item Code	Mark	Item Description	Qty.	Substitute	Note
1	910700200041		Bearing	2		
2	910401300024		Circlip	1		
3	505631520005		Link Block	1		
4	910200200013		Screw	1		
5	940801200001		Rotary Damper	1		
6	910400100004		Flat Washer	4		
7	910400500004		Spring Washer	4		
8	910200200021		Screw	4		
9	506733510000		Potentiometer	1		
9	921800100037		Potentiometer	1		**EN1175-2020**
9	505633010028		Potentiometer	1		**QT**
10	910200200014		Screw	4		
10	910200200014		Screw	2		**QT**
11	535931520002		Mounting Plate	1		
12	910200300016		Screw	2		
13	535931520001		Bracket	1		
14	910200200032		Screw	3		
15	910200200075		Screw	4		
16	505631520002		Fixing Base	1		

07 Steering unit (manual) (537846031202)

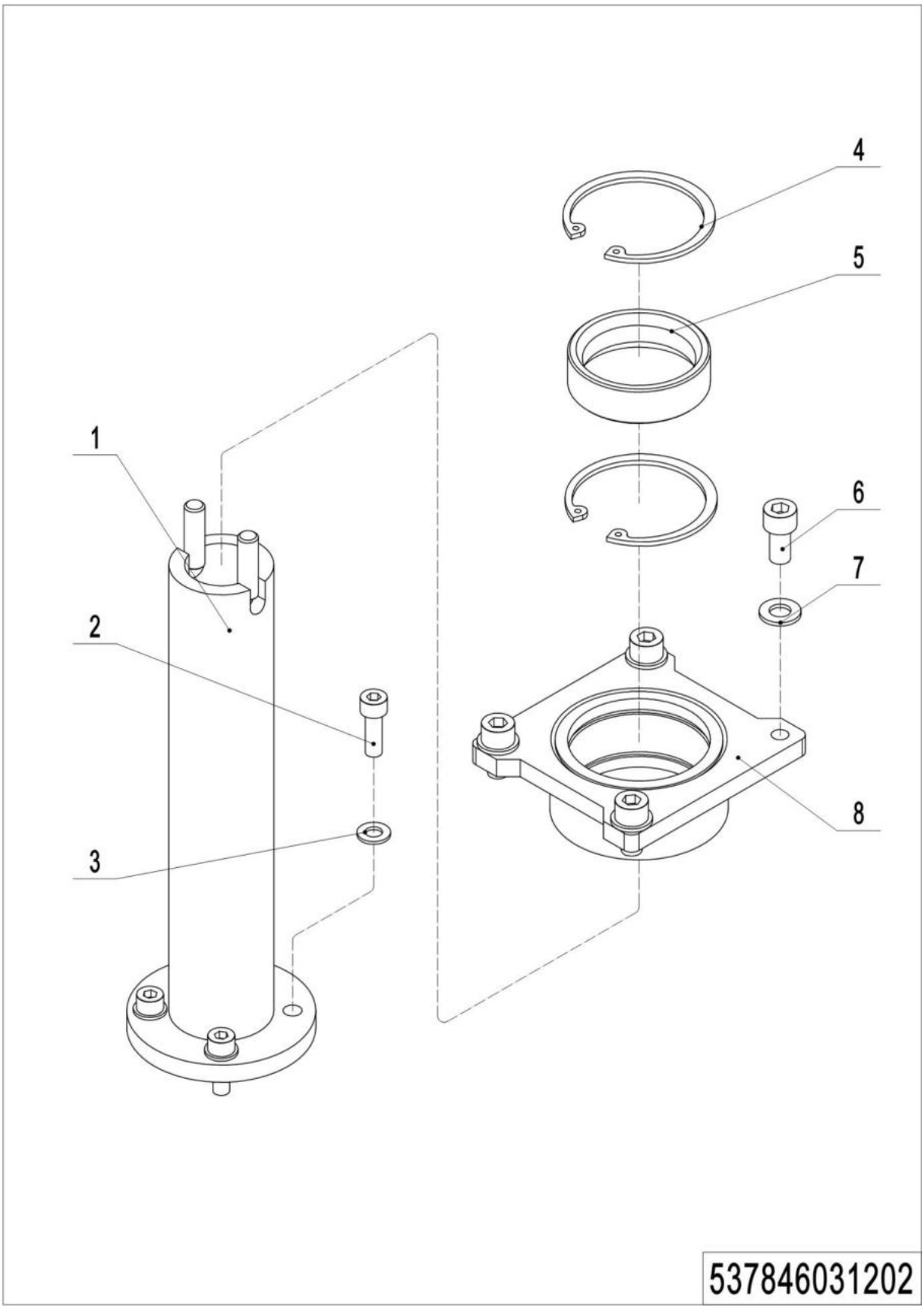

1= Supply as package. 2= Supply with constraints. 3= Phasing-out supply. 4= Supply as assembly. 5= Check other tables.

07 Steering unit (manual) (537846031202)

No.	Item Code	Mark	Item Description	Qty.	Substitute	Note
1	537831210001		handle Spindle	1		
2	910200200058		Screw	4		
3	910400100006		Flat Washer	4		
4	910401400019		Circlip	2		
5	537831220005		Bushing	2		
6	910200200075		Screw	4		
7	910400100007		Flat Washer	4		
8	537831210002		Pedestal	1		

Chapter 6: Electrical components

01 Display (537846010001)

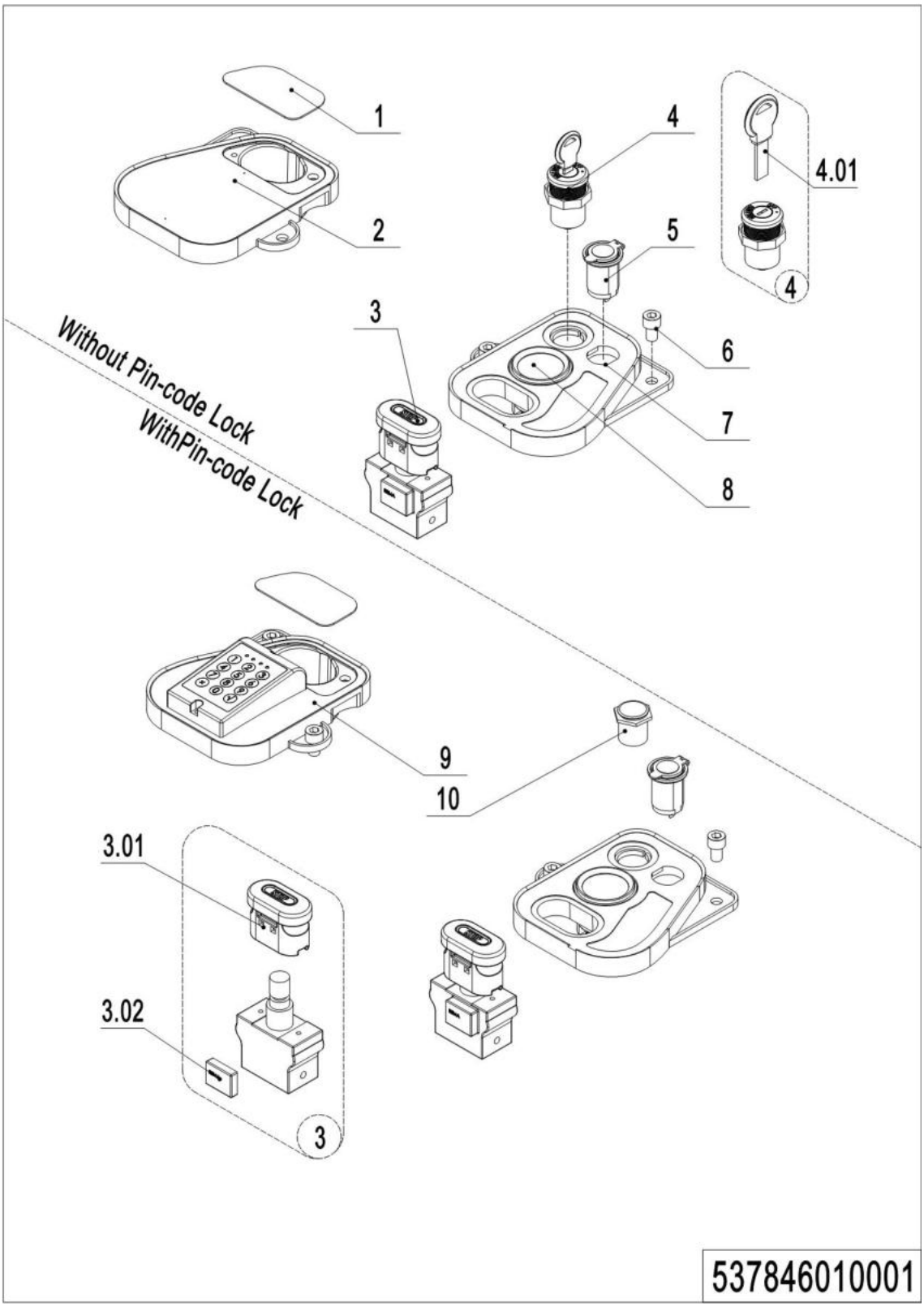

01 Display (537846010001)

No.	Item Code	Mark	Item Description	Qty.	Substitute	Note
1	535910020003		Close Plate	1		
2	535910020002		Bezel	1		
3	920200100009		Emergency Button	1		
3.01	920200100010		Emergency Button	1		
3.02	920200100012		Micro Shitch	1		
4	537833010019		Key Switch	1		
4	505634010001		Key Switch	1		**Li**
4.01	920200200025		Key Switch	1		
4.01	403898520003		Key	1		**Li**
5	206033010036		USB interface	1		
6	910200200074		Screw	4		
7	535910020001		Bezel	1		
8	921100100094		Display	1		**QT**
8	921100100049		Display	1		**ZAPI**
8	921100100135		Display	1		**EN1175-2020**
9	920200200014		Pin-code Lock	1		
10	537834010000		Button	1		

02 Wire harness (manual steering, ZAPI) (537846033001)

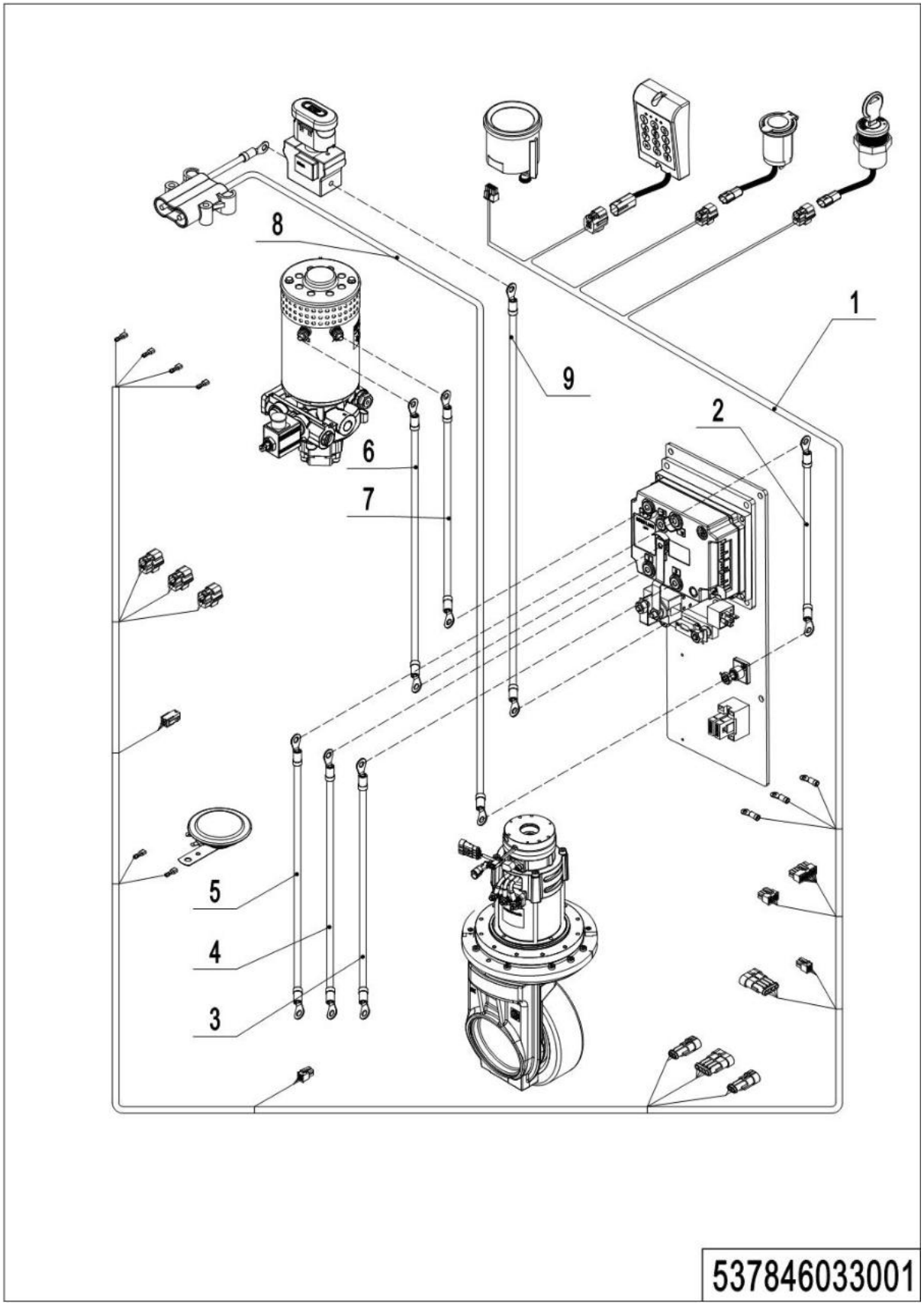

1= Supply as package. 2= Supply with constraints. 3= Phasing-out supply. 4= Supply as assembly. 5= Check other tables.

02 Wire harness (manual steering, ZAPI) (537846033001)

No.	Item Code	Mar	Item Description	Qty.	Substitute	Note
1	537833010000		Wire Harness	1		
2	537833010009		Cable	1		
3	537833010015		Cable	1		
4	537833010014		Cable	1		
5	537833010013		Cable	1		
6	537833010006		Cable	1		
7	537833010007		Cable	1		
8	537833010008		Wire Harness	1		
8	537833010058		Wire Harness(Li)	1		Li
9	537833010005		Cable	1		

03 Wire harness (manual steering, QT) (537846033002)

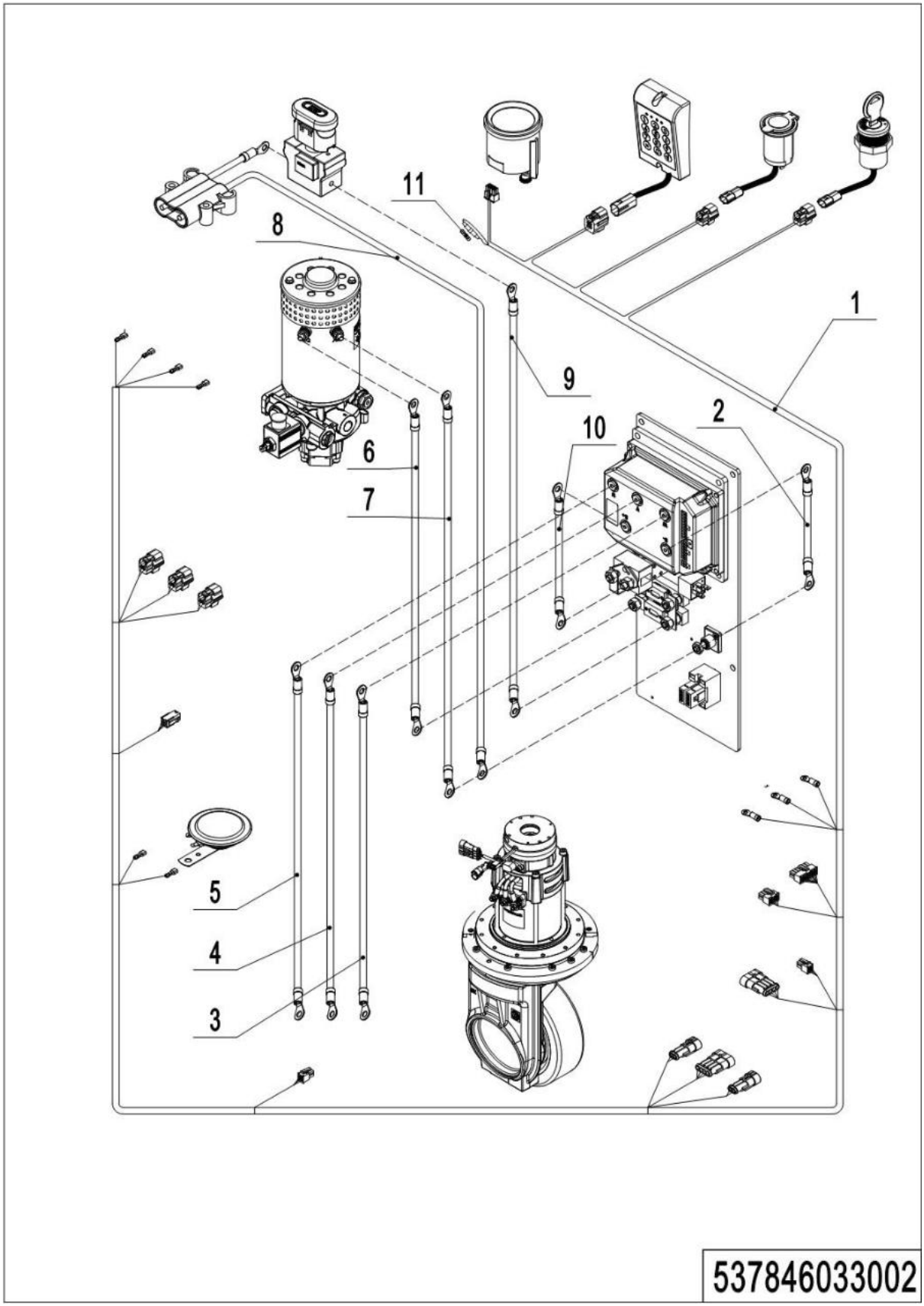

1= Supply as package. 2= Supply with constraints. 3= Phasing-out supply. 4= Supply as assembly. 5= Check other tables.

03 Wire harness (manual steering, QT) (537846033002)

No.	Item Code	Mark	Item Description	Qty.	Substitute	Note
1	537833010026		Wire Harness	1		
2	537833010038		Cable	1		
3	537833010032		Cable	1		
4	537833010031		Cable	1		
5	537833010030		Cable	1		
6	537833010033		Cable	1		
7	537833010034		Cable	1		
8	537833010008		Wire Harness	1		
8	537833010058		Wire Harness(Li)	1		Li
9	537833010005		Cable	1		
10	537833010002		Cable	1		
11	920100300001		Fuse	1		

04 Wire harness (EPS, ZAPI) (537846033003)

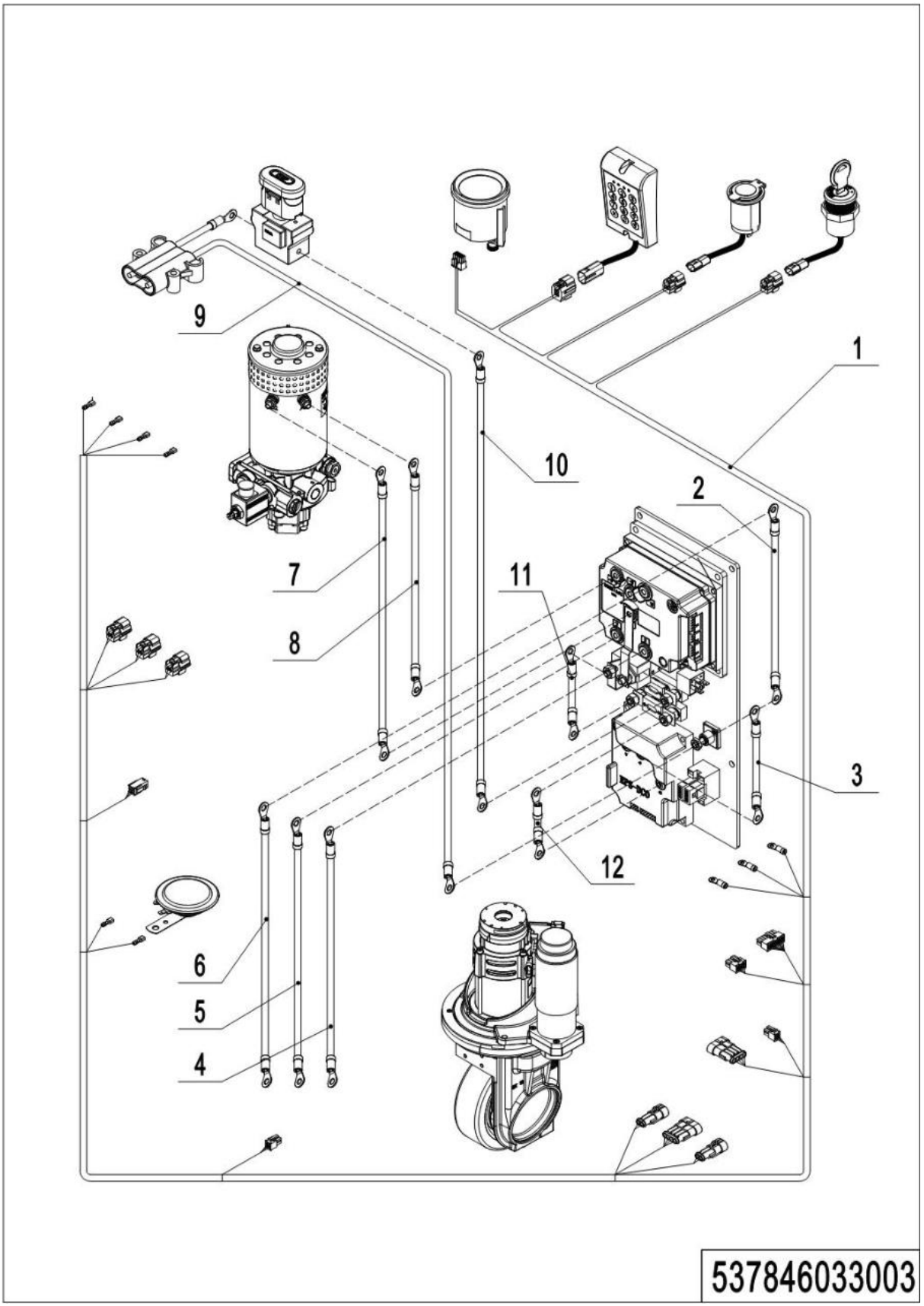

1= Supply as package. 2= Supply with constraints. 3= Phasing-out supply. 4= Supply as assembly. 5= Check other tables.

04 Wire harness (EPS, ZAPI) (537846033003)

No.	Item Code	Mark	Item Description	Qty.	Substitute	Note
1	537833010001		Wire Harness	1		
2	537833010009		Cable	1		
3	537833010018		Cables	1		
4	537833010015		Cable	1		
5	537833010014		Cable	1		
6	537833010013		Cable	1		
7	537833010006		Cable	1		
8	537833010007		Cable	1		
9	537833010008		Wire Harness	1		
9	537833010058		Wire Harness(Li)	1		Li
10	537833010005		Cable	1		
11	535933010014		Cables	1		
12	535933010015		Cables	1		

05 Wire harness (EPS, QT) (537846033004)

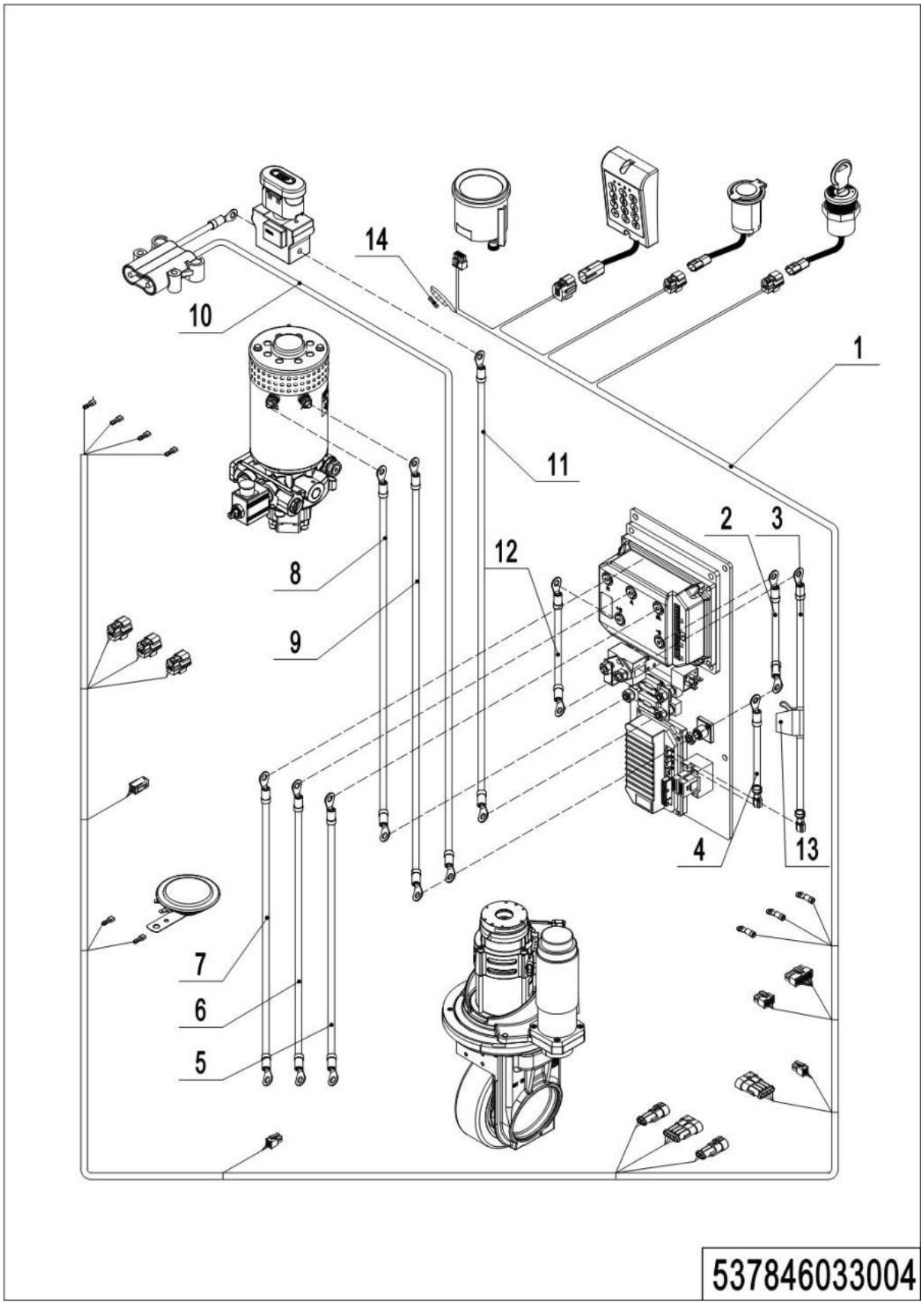

1= Supply as package. 2= Supply with constraints. 3= Phasing-out supply. 4= Supply as assembly. 5= Check other tables.

05 Wire harness (EPS, QT) (537846033004)

No.	Item Code	Mark	Item Description	Qty.	Substitute	Note
1	537833010028		Wire Harness	1		
2	537833010038		Cable	1		
3	537833010035		Wire Harness	1		
4	537833010036		Cables	1		
5	537833010032		Cable	1		
6	537833010031		Cable	1		
7	537833010030		Cable	1		
8	537833010033		Cable	1		
9	537833010034		Cable	1		
10	537833010008		Wire Harness	1		
10	537833010058		Wire Harness(Li)	1		Li
11	537833010005		Cable	1		
12	537833010037		Cable	1		
13	920100200011		Fuse	1		
14	920100300001		Fuse	1		

06 Wire harness (manual steering, EN1175-2020) (537846033009)

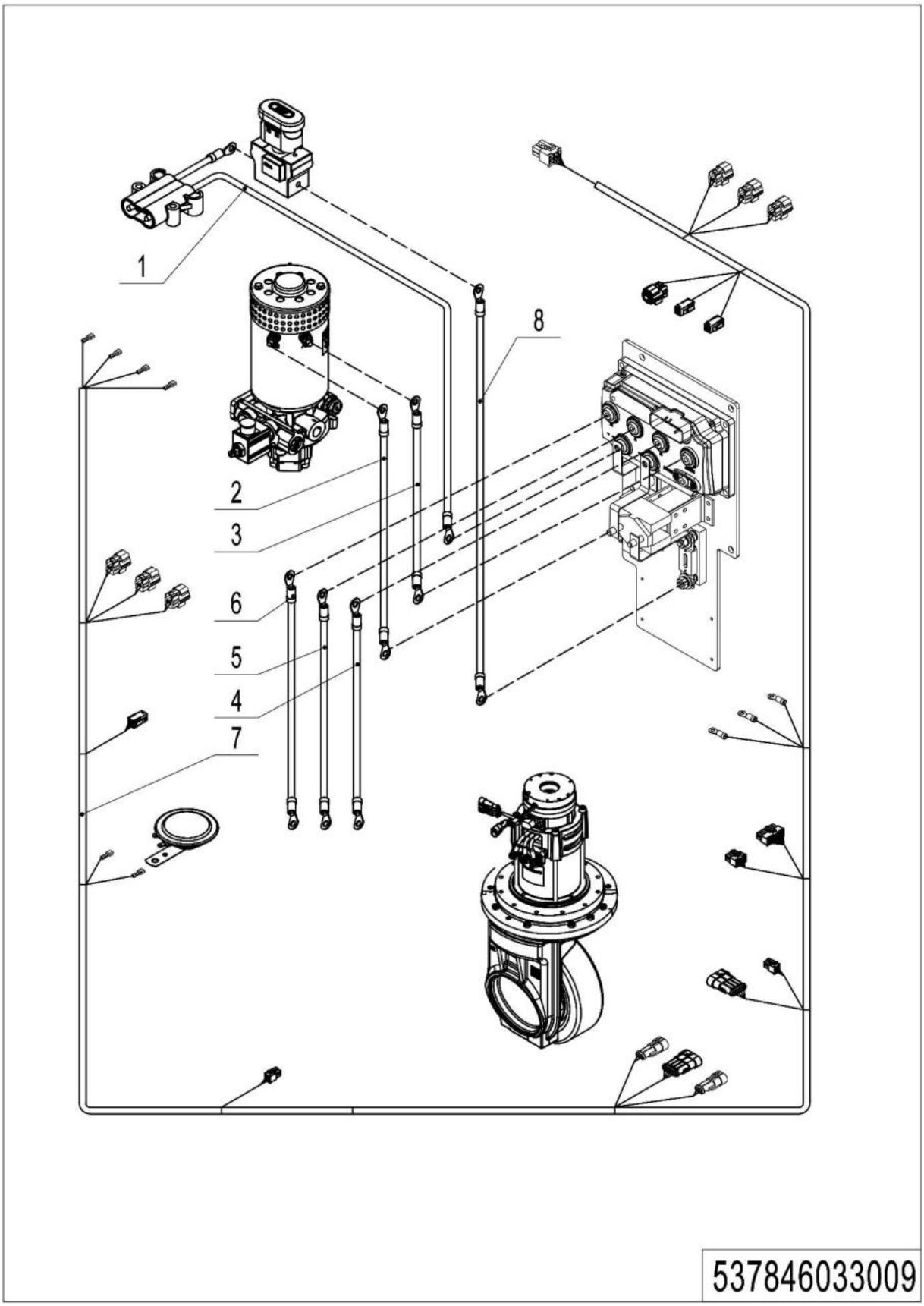

1= Supply as package. 2= Supply with constraints. 3= Phasing-out supply. 4= Supply as assembly. 5= Check other tables.

06 Wire harness (manual steering, EN1175-2020) (537846033009)

No.	Item Code	Mark	Item Description	Qty.	Substitute	Note
1	537833010076		Wire Harness	1		
1	537833010077		Wire Harness(Li)	1		Li
2	537833010071		Cable	1		
3	537833010070		Cable	1		
4	537833010067		Cable	1		
5	537833010068		Cable	1		
6	537833010069		Cable	1		
7	537833010063		Wire Harness	1		
8	537833010072		Cable	1		

07 Wire harness (EPS, EN1175-2020) (537846033010)

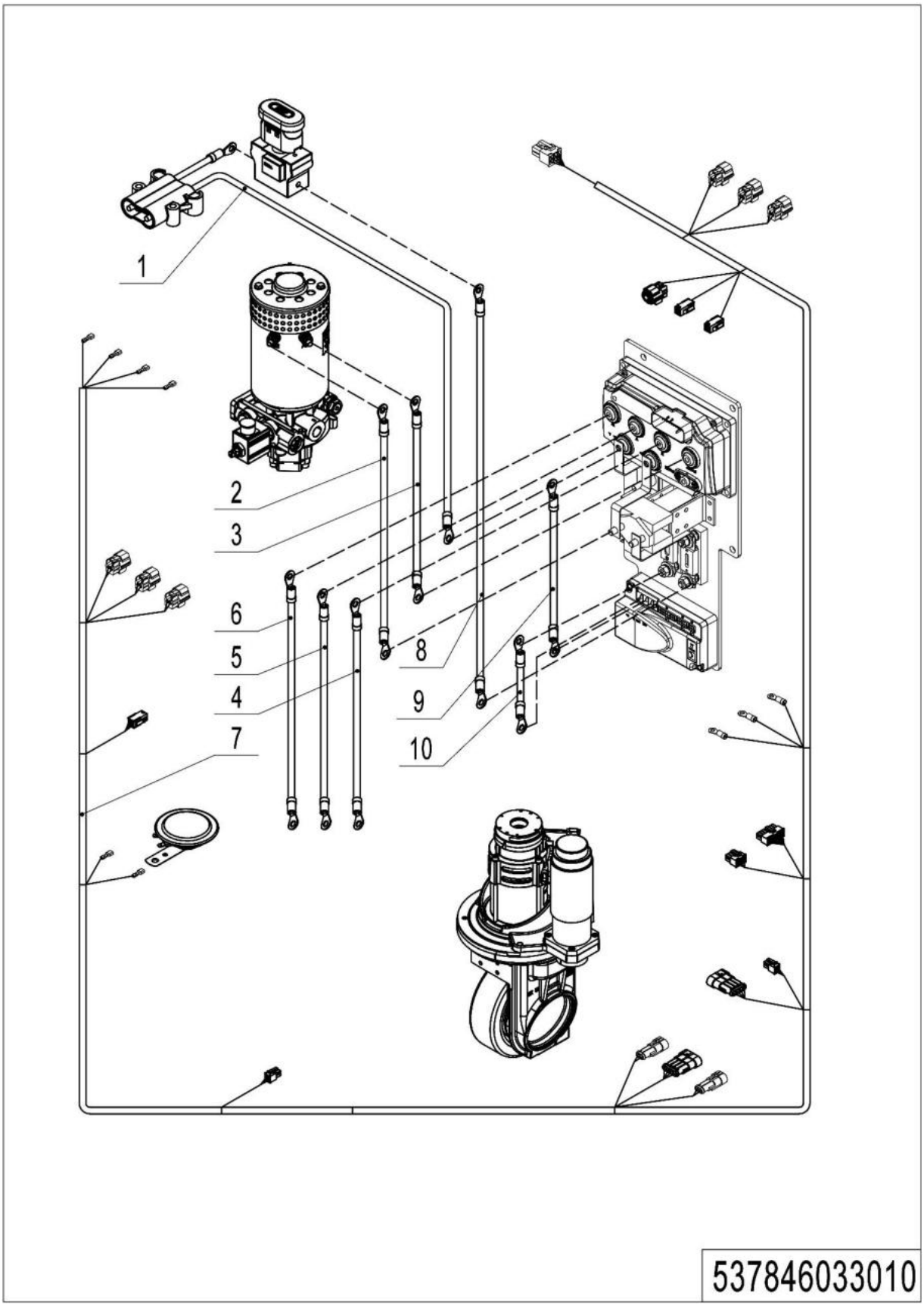

1= Supply as package. 2= Supply with constraints. 3= Phasing-out supply. 4= Supply as assembly. 5= Check other tables.

07 Wire harness (EPS, EN1175-2020) (537846033010)

No.	Item Code	Mark	Item Description	Qty.	Substitute	Note
1	537833010076		Wire Harness	1		
1	537833010077		Wire Harness(Li)	1		Li
2	537833010071		Cable	1		
3	537833010070		Cable	1		
4	537833010067		Cable	1		
5	537833010068		Cable	1		
6	537833010069		Cable	1		
7	537833010063		Wire Harness	1		
8	537833010072		Cable	1		
9	537833010073		Cables	1		
10	537833010074		Cables	1		

08 Controller (manual steering, ZAPI) (537846033005)

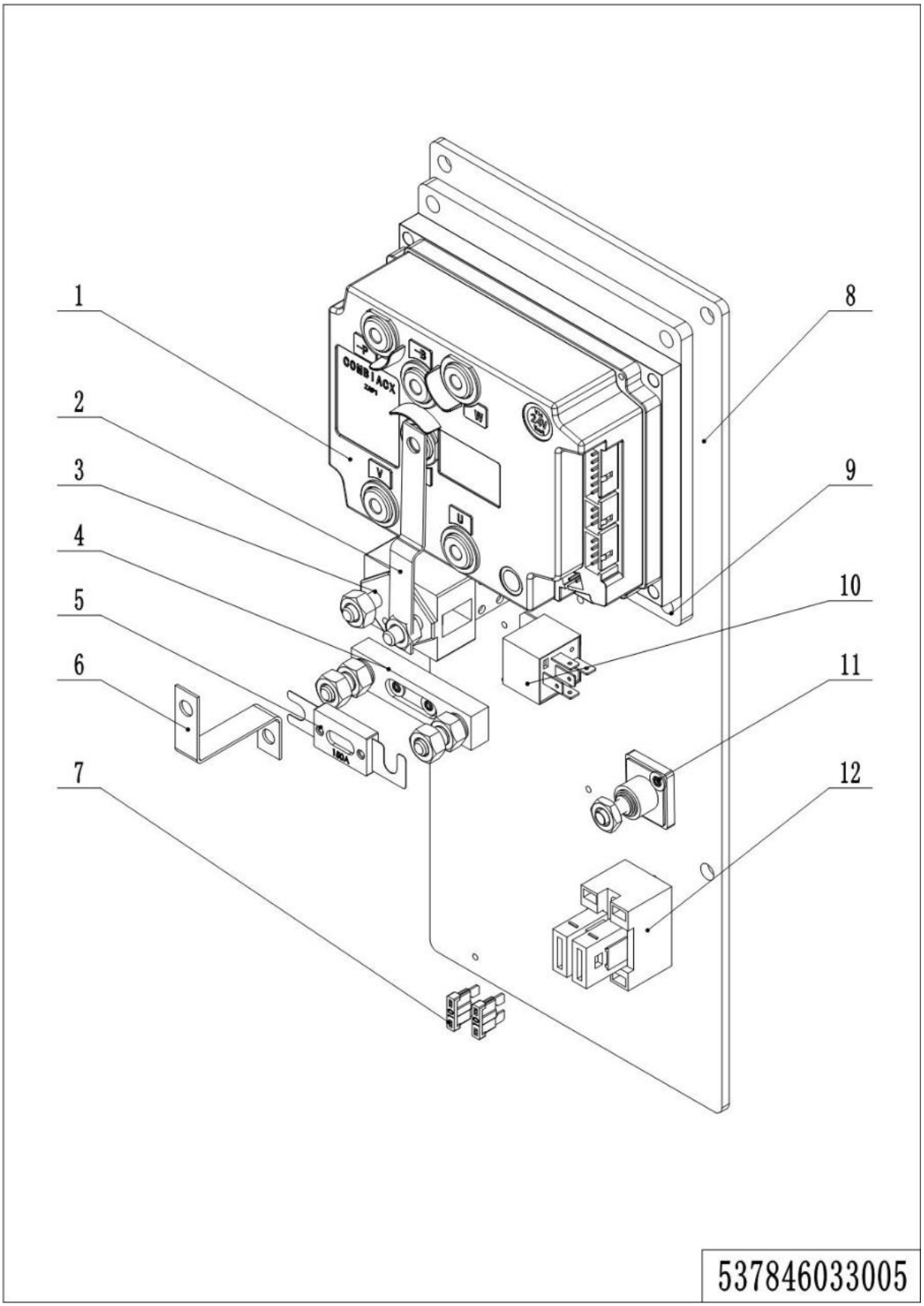

1= Supply as package. 2= Supply with constraints. 3= Phasing-out supply. 4= Supply as assembly. 5= Check other tables.

08 Controller (manual steering, ZAPI) (537846033005)

No.	Item Code	Mark	Item Description	Qty.	Substitute	Note
1	921400100048		Controller	1		
2	535933020004		Copper Busbar	1		
3	920700100002		Contactor	1		
4	920100400002		Fuse Holder	1		
5	920100100013		Fuse	1		
6	535933020003		Copper Busbar	1		
7	920100200002		Fuse	1		
8	537833020003		Mounting Plate	1		
9	534733020000		Plate	1		
10	920800100011		Relay	1		
11	920100400001		Fuse Holder	1		
12	920100400005		Fuse Holder	1		

09 Controller (manual steering, QT) (537846033006)

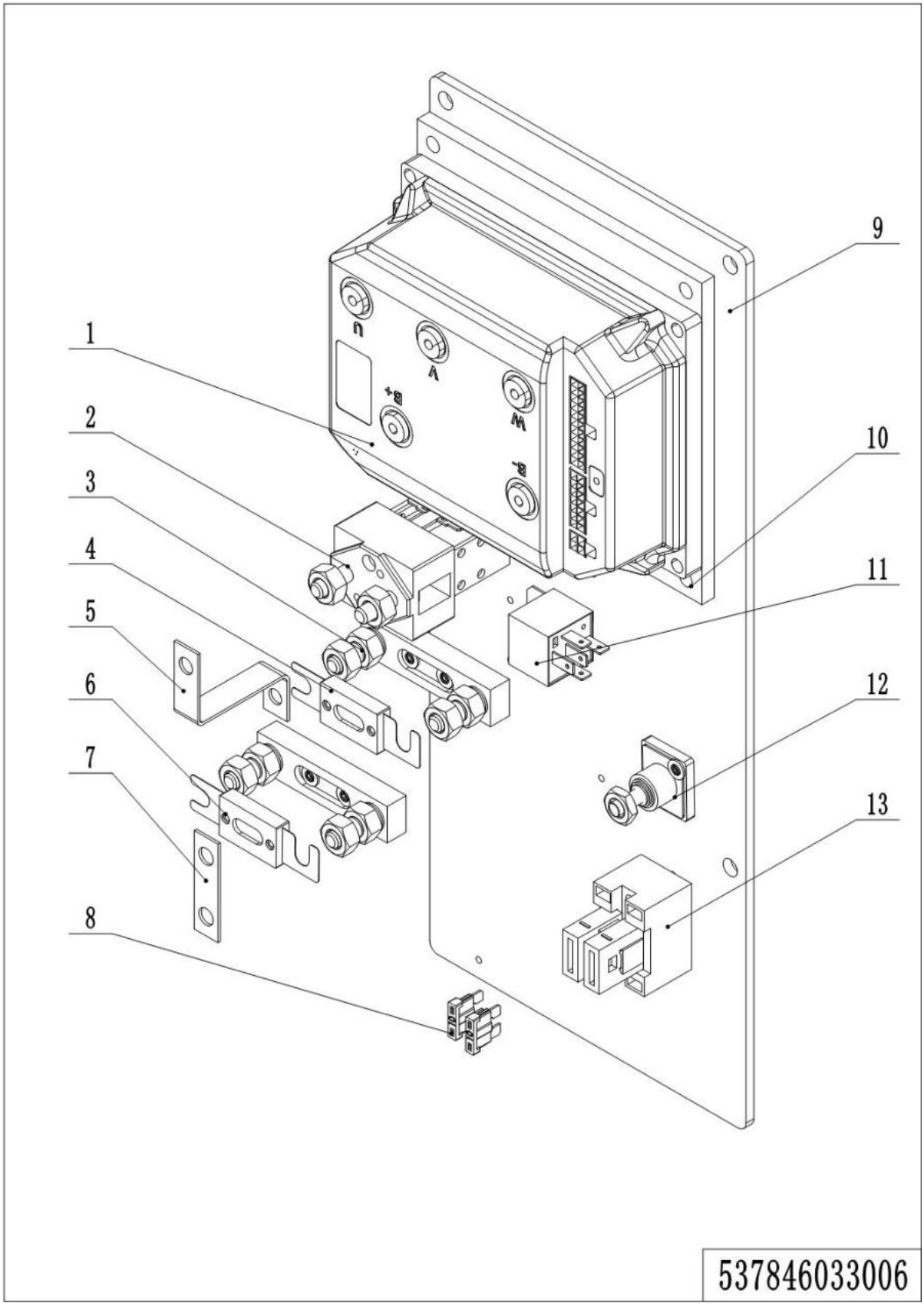

1= Supply as package. 2= Supply with constraints. 3= Phasing-out supply. 4= Supply as assembly. 5= Check other tables.

09 Controller (manual steering, QT) (537846033006)

No.	Item Code	Mark	Item Description	Qty.	Substitute	Note
1	921400100131		Controller	1		
2	920700100017		Relay	1		
3	920100400002		Fuse Holder	2		
4	920100100007		Fuse	1		
5	505633020002		Copper Busbar	1		
6	920100100008		Fuse	1		
7	505633020003		Copper Busbar	1		
8	920100200002		Fuse	1		
9	537833020003		Mounting Plate	1		
10	534733020000		Plate	1		
11	920800100011		Relay	1		
12	920100400001		Fuse Holder	1		
13	920100400005		Fuse Holder	1		

10 Controller (EPS, ZAPI) (537846033007)

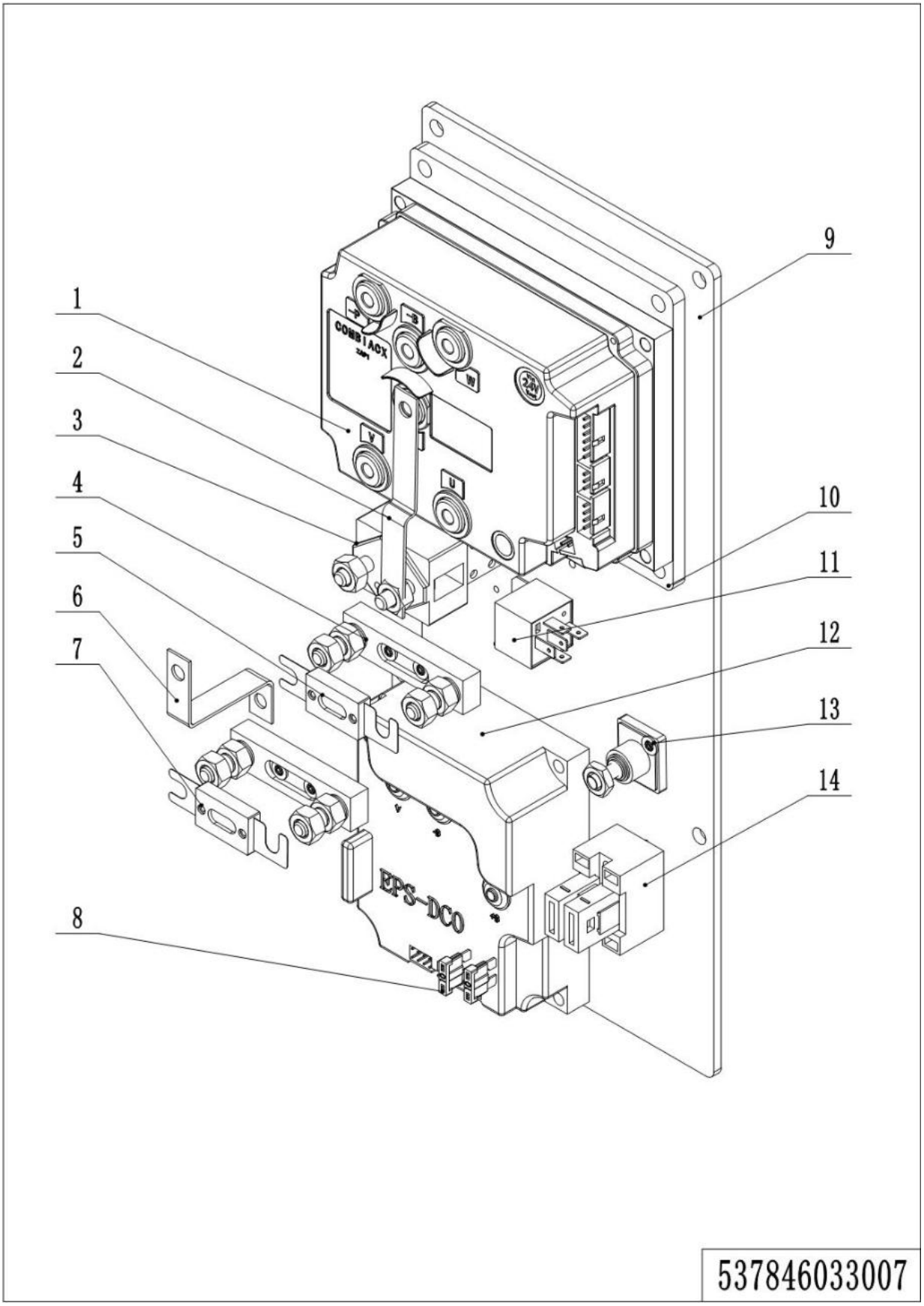

1= Supply as package. 2= Supply with constraints. 3= Phasing-out supply. 4= Supply as assembly. 5= Check other tables.

10 Controller (EPS, ZAPI) (537846033007)

No.	Item Code	Mark	Item Description	Qty.	Substitute	Note
1	921400100048		Controller	1		
2	535933020004		Copper Busbar	1		
3	920700100002		Contactor	1		
4	920100400002		Fuse Holder	2		
5	920100100013		Fuse	1		
6	535933020003		Copper Busbar	1		
7	920100100001		Fuse	1		
8	920100200002		Fuse	1		
9	537833020003		Mounting Plate	1		
10	534733020000		Plate	1		
11	920800100011		Relay	1		
12	921400100030		Controller	1		
13	920100400001		Fuse Holder	1		
14	920100400005		Fuse Holder	1		

11 Controller (EPS, QT) (537846033008)

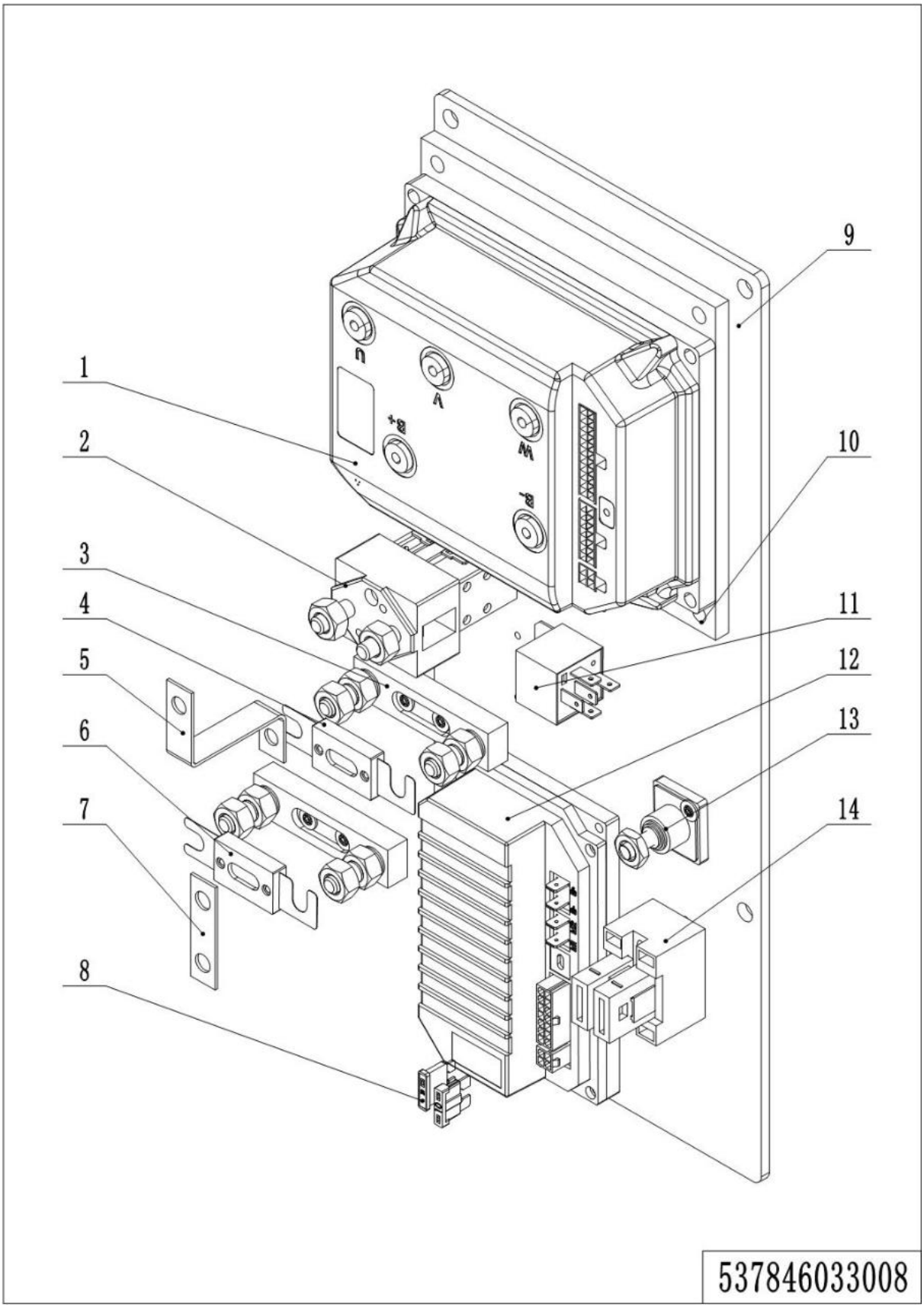

1= Supply as package. 2= Supply with constraints. 3= Phasing-out supply. 4= Supply as assembly. 5= Check other tables.

11 Controller (EPS, QT) (537846033008)

No.	Item Code	Mark	Item Description	Qty.	Substitute	Note
1	921400100131		Controller	1		
2	920700100017		Relay	1		
3	920100400002		Fuse Holder	2		
4	920100100007		Fuse	1		
5	505633020002		Copper Busbar	1		
6	920100100008		Fuse	1		
7	505633020003		Copper Busbar	1		
8	920100200002		Fuse	1		
9	537833020003		Mounting Plate	1		
10	534733020000		Plate	1		
11	920800100011		Relay	1		
12	921400100134		Controller	1		
13	920100400001		Fuse Holder	1		
14	920100400005		Fuse Holder	1		

12 Controller (manual steering, EN1175-2020) (537846033013)

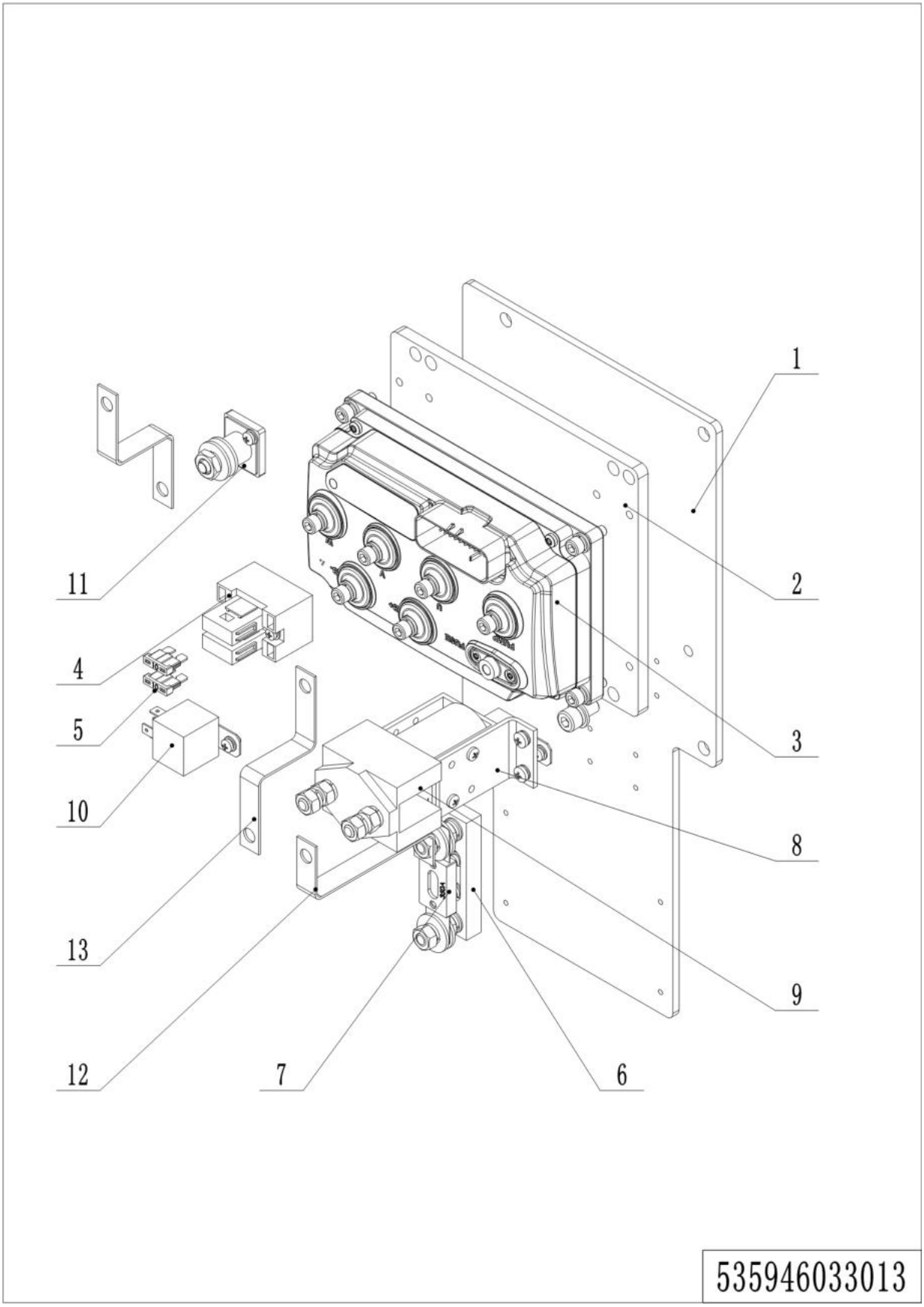

1= Supply as package. 2= Supply with constraints. 3= Phasing-out supply. 4= Supply as assembly. 5= Check other tables.

12 Controller (manual steering, EN1175-2020) (537846033013)

No.	Item Code	Mark	Item Description	Qty.	Substitute	Note
1	562633020002		Mounting Plate	1		
2	534733020003		Plate	1		
3	921400100124		Controller	1		
4	920100400005		Fuse Holder	1		
5	920100400001		Fuse Holder	2		
6	920100400002		Fuse Holder	1		
7	920100100013		Fuse	1		
8	921300400004		Holder	1		
9	920700100002		Contactor	1		
10	920800100011		Relay	1		
11	920100400001		Fuse Holder	1		
12	535933020004		Copper Busbar	1		
13	535933020006		Copper Busbar	2		

13 Controller (EPS, EN1175-2020) (537846033014)

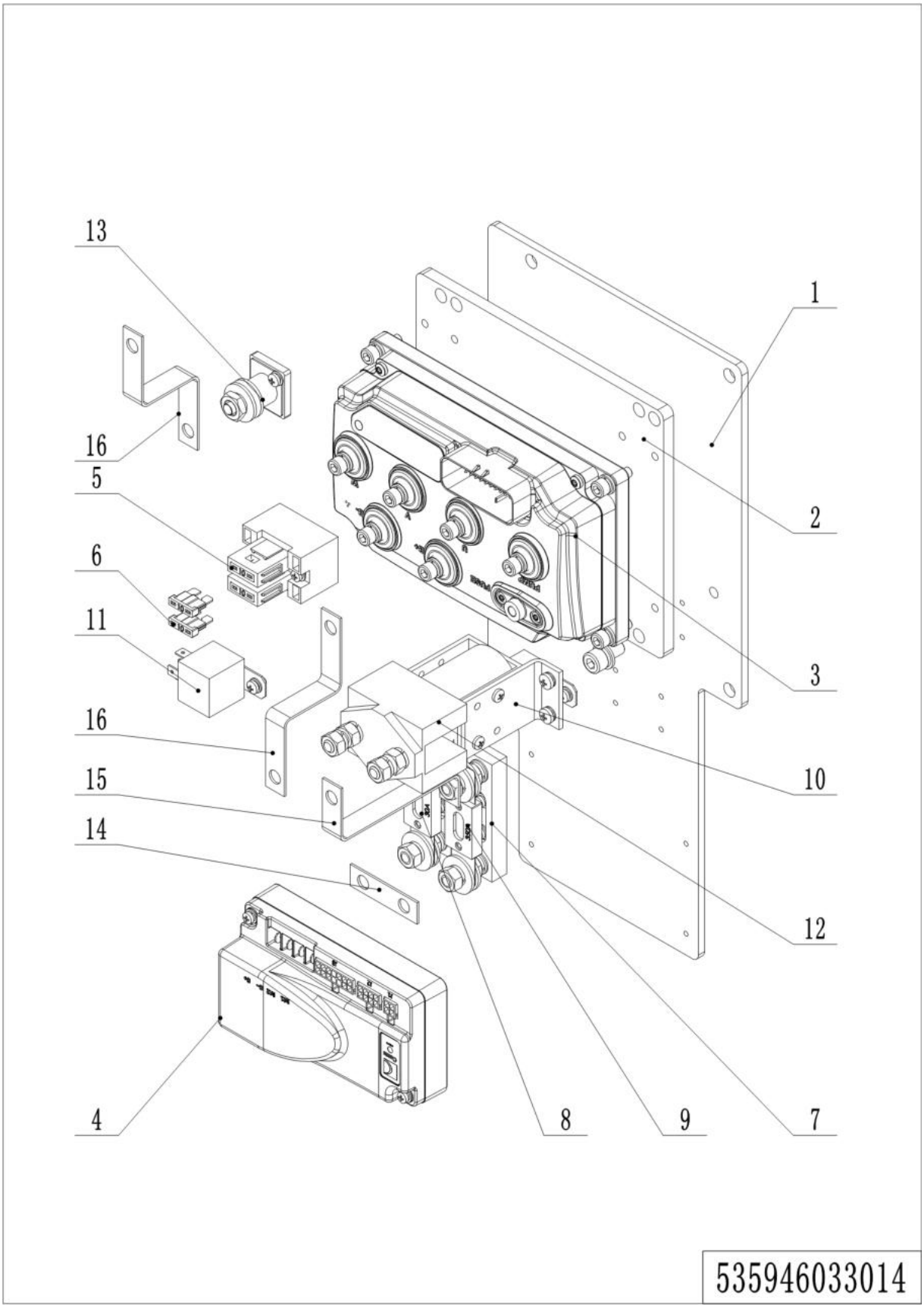

1= Supply as package. 2= Supply with constraints. 3= Phasing-out supply. 4= Supply as assembly. 5= Check other tables.

13 Controller (EPS, EN1175-2020) (537846033014)

No.	Item Code	Mark	Item Description	Qty.	Substitute	Note
1	562633020001		Mounting Plate	1		
2	534733020003		Plate	1		
3	921400100124		Controller	1		
4	921400100077		Controller	1		
5	920100400005		Fuse Holder	1		
6	920100200002		Fuse	2		
7	920100400002		Fuse Holder	2		
8	920100100001		Fuse	1		
9	920100100013		Fuse	1		
10	921300400004		Holder	1		
11	920700100002		Contactor	1		
12	920800100011		Relay	1		
13	920100400001		Fuse Holder	1		
14	505633020003		Copper Busbar	1		
15	535933020004		Copper Busbar	1		
16	535933020006		Copper Busbar	2		

14 Charger (537846036501)

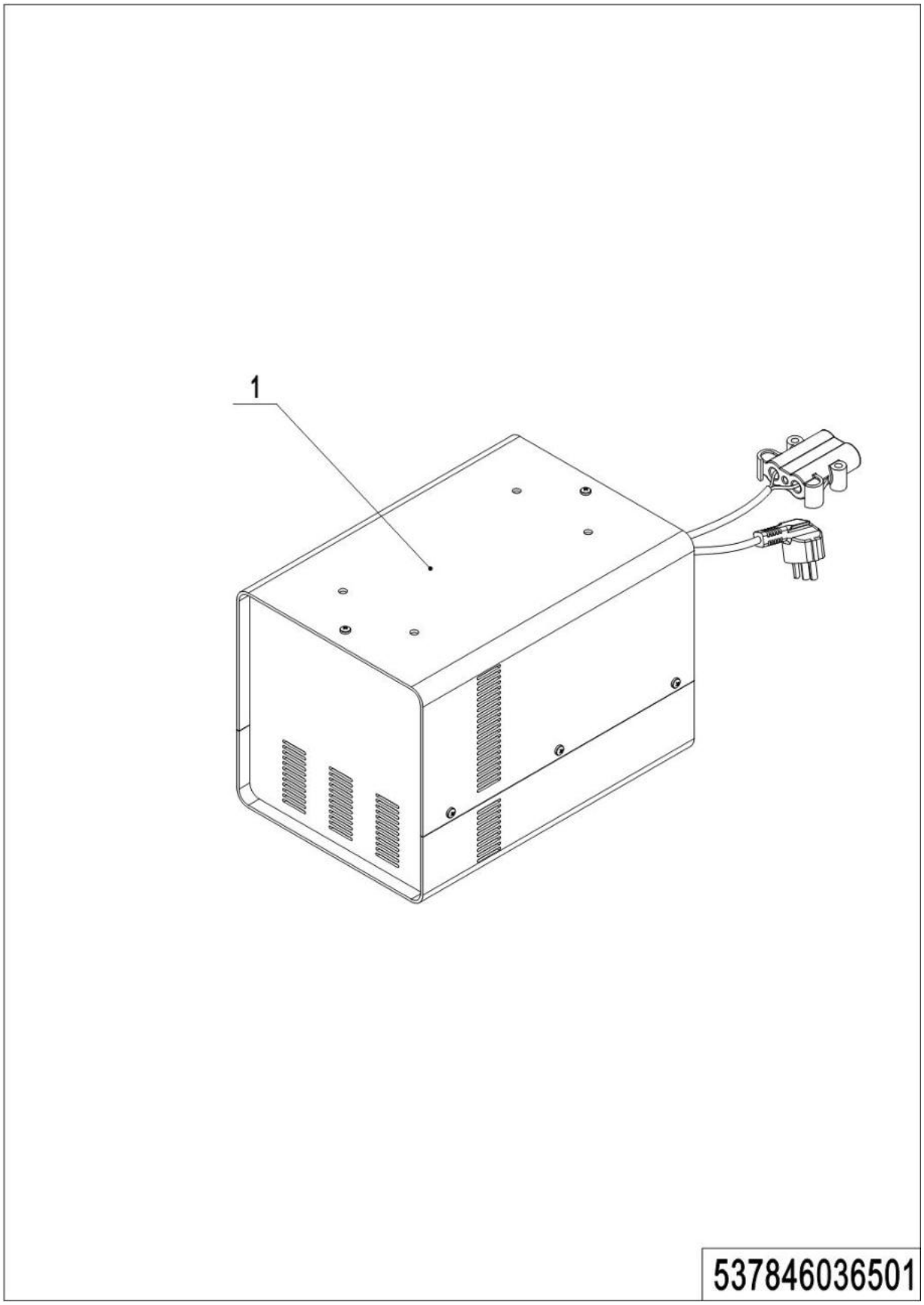

1= Supply as package. 2= Supply with constraints. 3= Phasing-out supply. 4= Supply as assembly. 5= Check other tables.

14 Charger (537846036501)

No.	Item Code	Mark	Item Description	Qty.	Substitute	Note
1	921000200183		Charger24V35A(Aisa-CHN)	1		
1	921000200184		Charger24V35A(Aisa-ENG)	1		
1	921000200185		Charger24V35A(EU)	1		
1	921000200186		Charger24V35A(ENG)	1		
1	921000200187		Charger24V35A(AUS)	1		
1	921000200188		Charger24V35A(USA)	1		
1	921000200365		Charger24V35A(ISR)	1		
1	921000200489		Charger24V35A(BRA)	1		
1	921000200578		Charger24V35A(BIGZA)	1		
1	921000200284		Charger24V35A(Aisa-CHN)	1		
1	921000200290		Charger24V35A(Aisa-ENG)	1		
1	921000200294		Charger24V35A(EU)	1		
1	921000200302		Charger24V35A(AUS)	1		
1	921000200298		Charger24V35A(ENG)	1		
1	921000200306		Charger24V35A(USA)	1		
1	921000200366		Charger24V35A(ISR)	1		
1	921000200283		Charger24V30A(Aisa-CHN)	1		
1	921000200289		Charger24V30A(Aisa-ENG)	1		
1	921000200293		Charger24V30A(EU)	1		
1	921000200301		Charger24V30A(AUS)	1		
1	921000200297		Charger24V30A(ENG)	1		
1	921000200305		Charger24V30A(USA)	1		
1	921000200368		Charger24V30A(ISR)	1		
1	921000200001		Charger24V30A(Aisa-CHN)	1		
1	921000200002		Charger24V30A(Aisa-ENG)	1		
1	921000200003		Charger24V30A(EU)	1		
1	921000200004		Charger24V30A(AUS)	1		
1	921000200005		Charger24V30A(ENG)	1		
1	921000200006		Charger24V30A(USA)	1		

14 Charger (537846036501) continuation

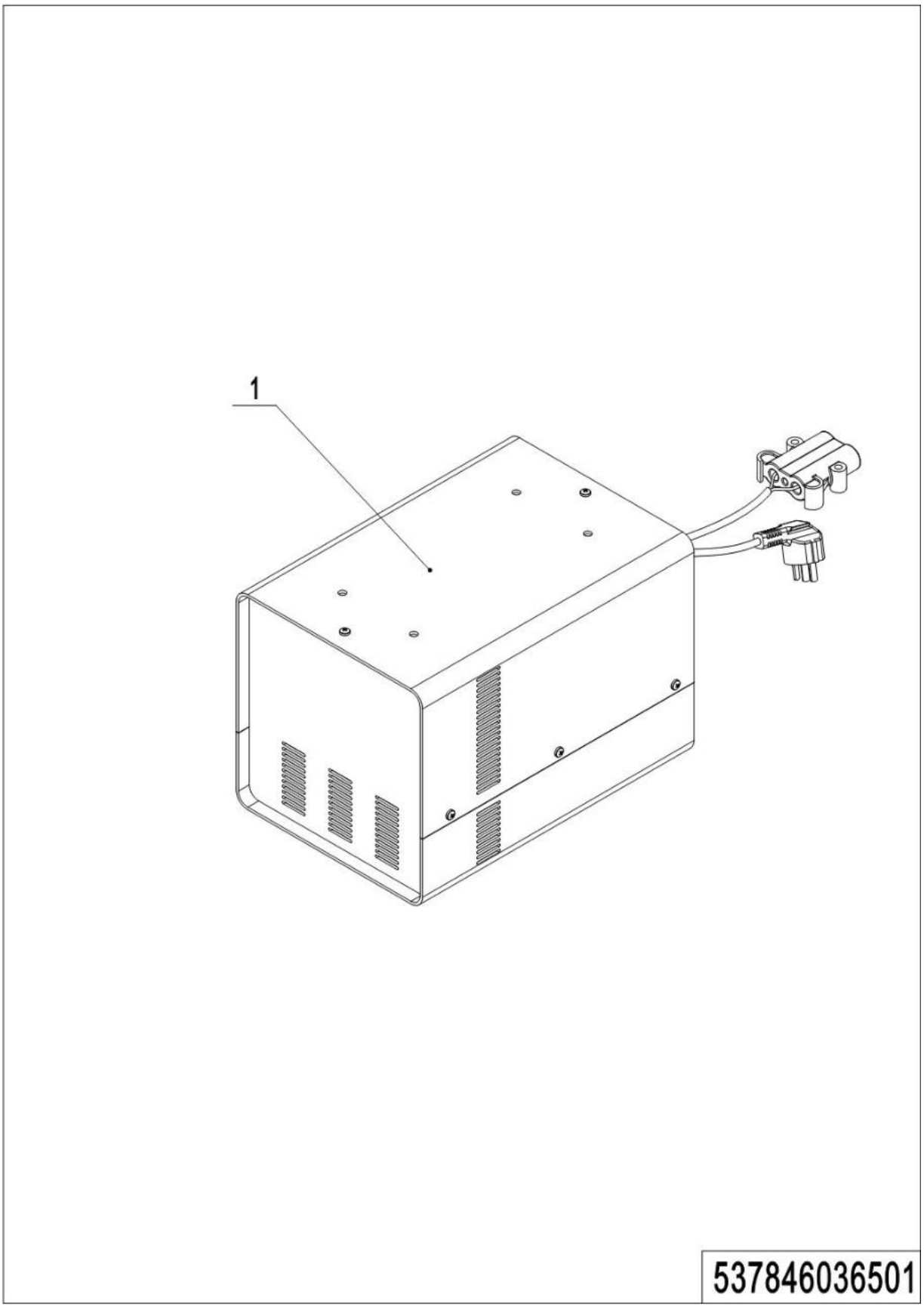

1= Supply as package. 2= Supply with constraints. 3= Phasing-out supply. 4= Supply as assembly. 5= Check other tables.

14 Charger (537846036501) continuation

No.	Item Code	Mark	Item Description	Qty.	Substitute	Note
1	921000200490		Charger 24V30A(BRA)	1		
1	921000200360		Charger24V30A(ISR)	1		
1	921000200450		Charger24V30A(ARG)	1		
1	921000200439		Charger24V30A(ZA)	1		
1	921000200589		Charger24V35A(BIGZA)	1		

15 Charger(Li) (537846036502)

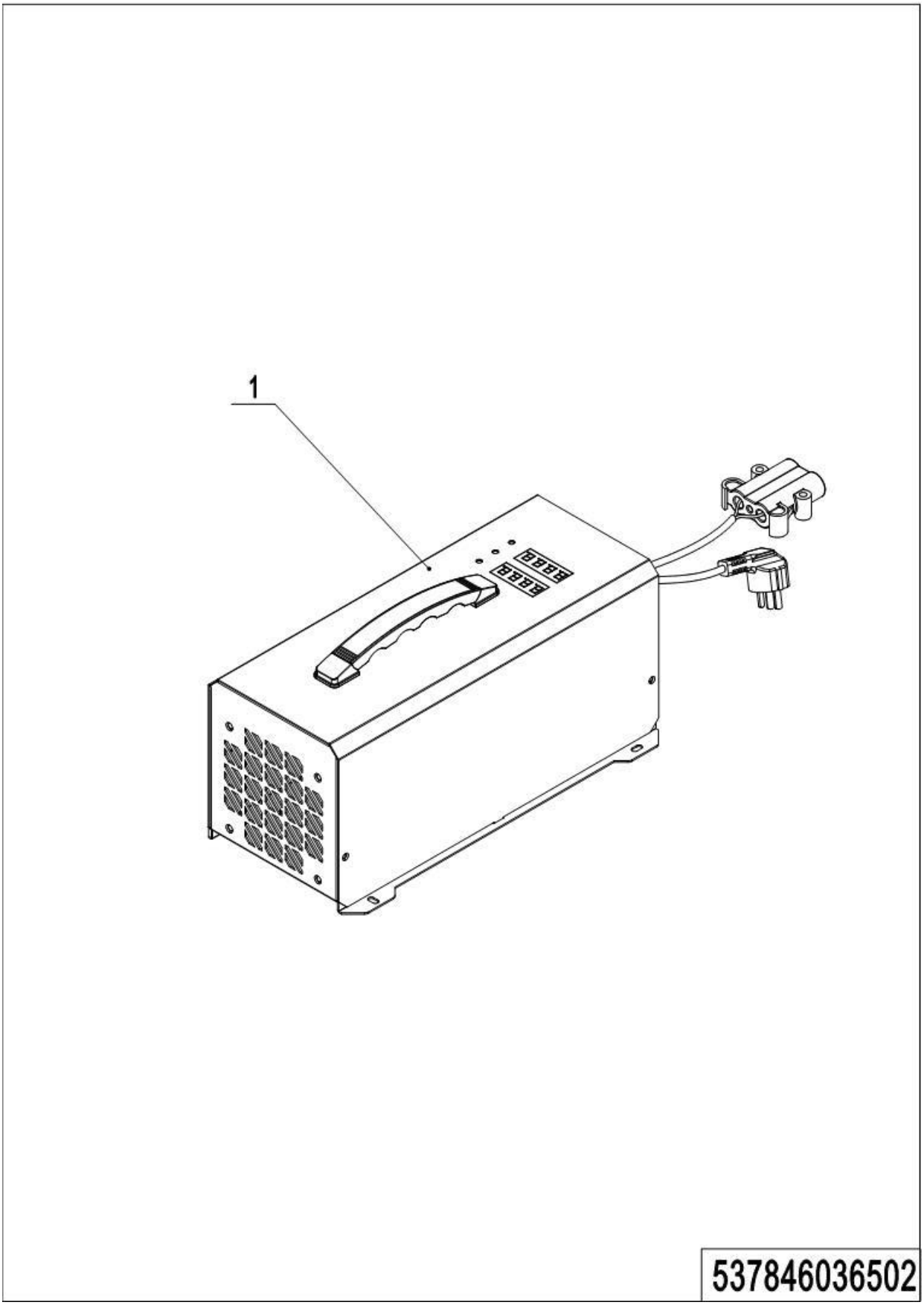

1= Supply as package. 2= Supply with constraints. 3= Phasing-out supply. 4= Supply as assembly. 5= Check other tables.

15 Charger(Li) (537846036502)

No.	Item Code	Mark	Item Description	Qty.	Substitute	Note
1	921000200531		Charger24V80A(Asia-CHN)	1		
1	921000200532		Charger24V80A(Asia-EN)	1		
1	921000200533		Charger24V80A(EU)	1		
1	921000200534		Charger24V80A(ENG)	1		
1	921000200535		Charger24V80A(AUS)	1		
1	921000200536		Charger24V80A(ISR)	1		
1	921000200537		Charger24V80A(ARG)	1		
1	921000200538		Charger24V80A(ZA)	1		
1	921000200539		Charger24V8A(US)	1		
1	921000200530		Charger24V60A(US)	1		

16 Traction battery (534746037001)

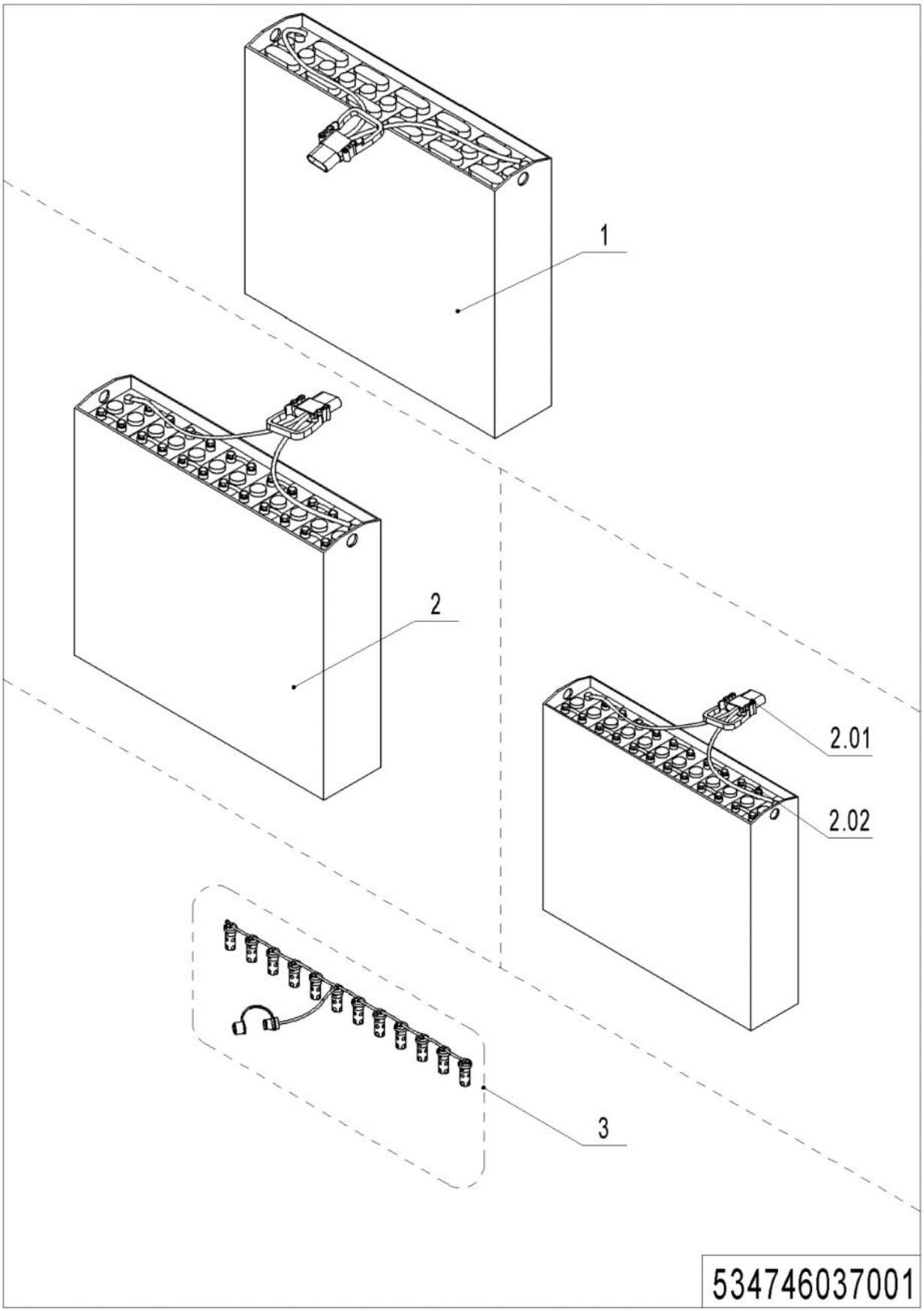

1= Supply as package. 2= Supply with constraints. 3= Phasing-out supply. 4= Supply as assembly. 5= Check other tables.

16 Traction battery (534746037001)

No.	Item Code	Mark	Item Description	Qty.	Substitute	Note
1	535937010002		Battery24V210Ah(welded)	1		
1	535937010004		Battery24V240Ah(welded)	1		
1	534737010000		Battery24V270Ah(welded)	1		
2	535937010001		Battery24V210Ah	1		
2	535937010003		Battery24V240Ah	1		
2	534737010001		Battery24V270Ah	1		
2.01	920400100007		Connector	1		For all battery
2.02	505698520000		Bolt	24		For Bolted battery
3	535937110000		Water refilling system	1		Optional

17 Traction battery(Li) (537846037001)

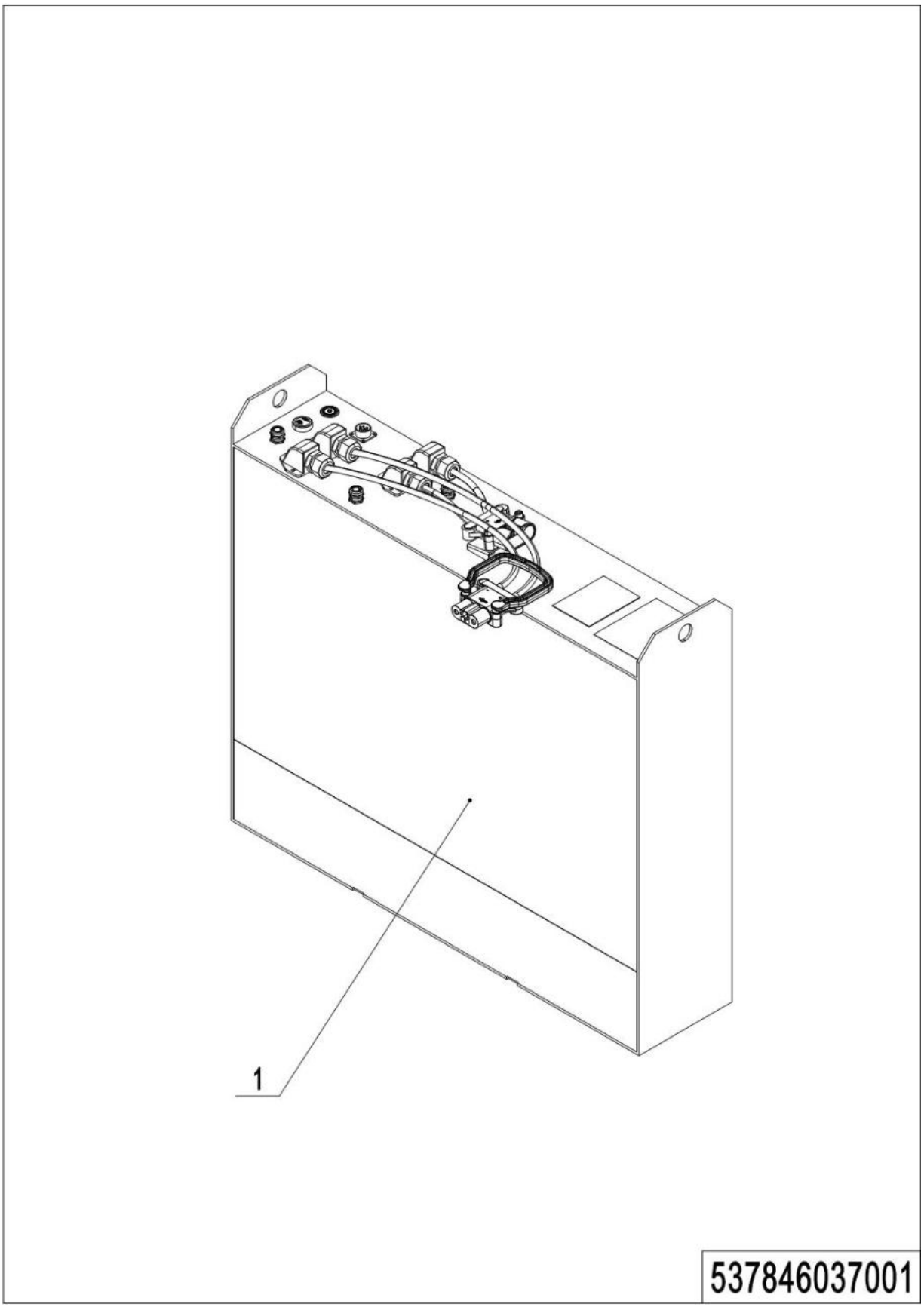

1= Supply as package. 2= Supply with constraints. 3= Phasing-out supply. 4= Supply as assembly. 5= Check other tables.

17 Traction battery(Li) (537846037001)

No.	Item Code	Mark	Item Description	Qty.	Substitute	Note
1	920600100340		Li Battery24V150Ah			
2	920600100342		Li Battery24V200Ah			

Chapter 7: Special equipment

01 Load backrest (optional) (532646040501)

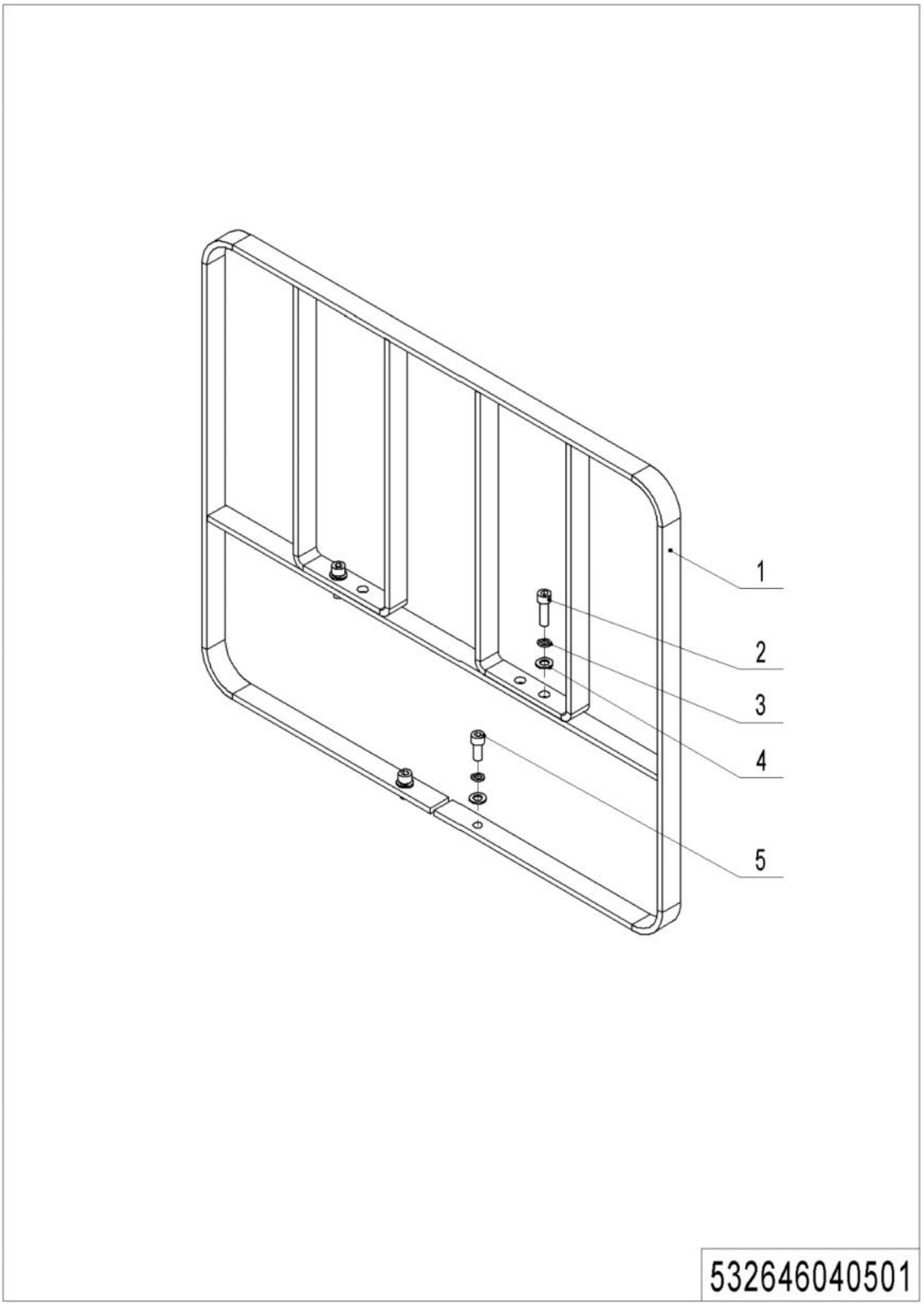

1= Supply as package. 2= Supply with constraints. 3= Phasing-out supply. 4= Supply as assembly. 5= Check other tables.

01 Load backrest (optional) (532646040501)

No.	Item Code	Mark	Item Description	Qty.	Substitute	Note
1	532640510001		Load Backrest	1		
2	910200200076		Screw	2		
3	910400500007		Spring Washer	4		
4	910400100007		Flat Washer	4		
5	910200200078		Screw	2		

Chapter 8: Others

01 Labels and decals (EU) (537846047001)

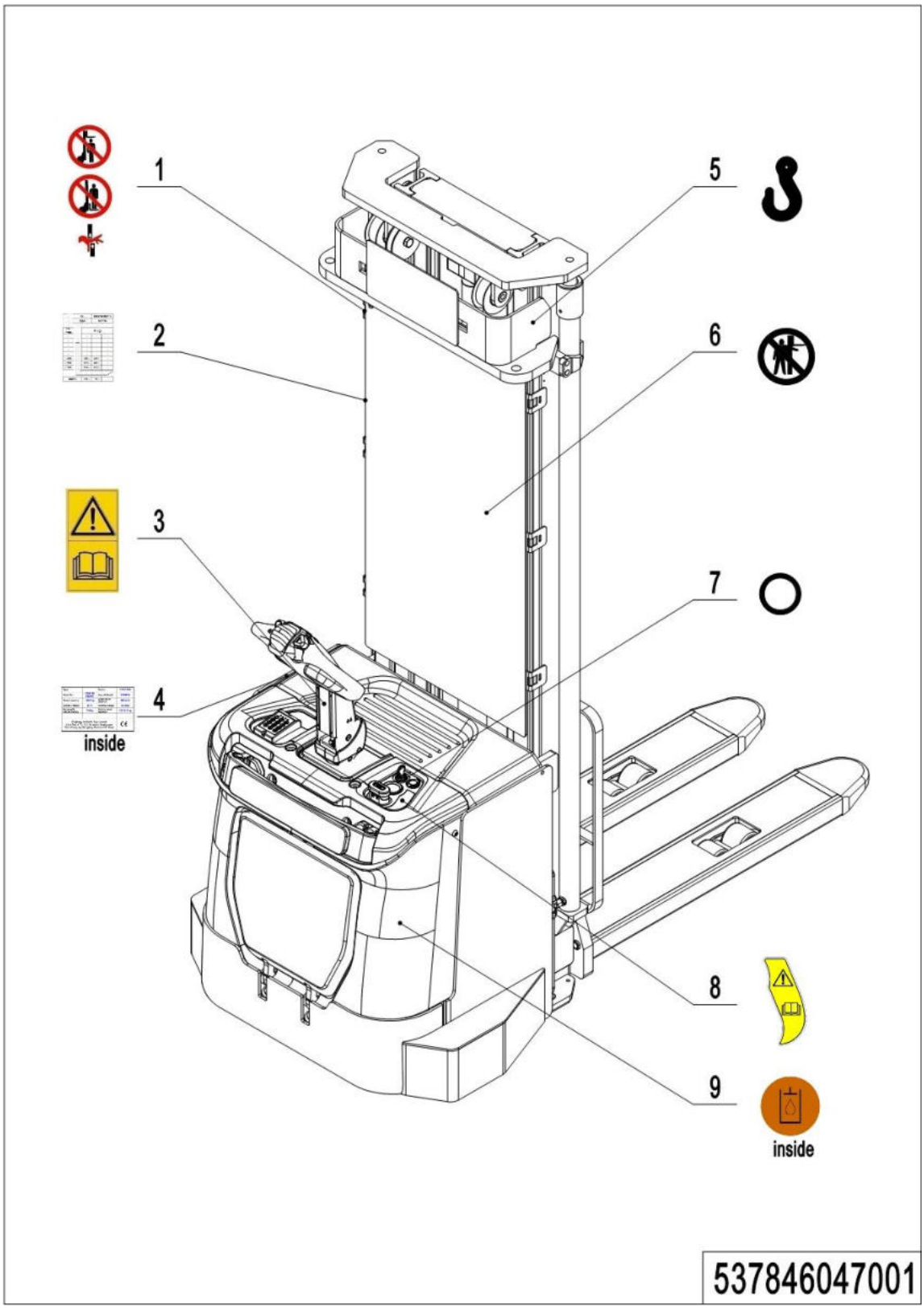

1= Supply as package. 2= Supply with constraints. 3= Phasing-out supply. 4= Supply as assembly. 5= Check other tables.

01 Labels and decals (EU) (537846047001)

No.	Item Code	Mark	Item Description	Qty.	Substitute	Note
1	941200100004		Label	2		
2	537847520001		Load Capacity Diagram	1		
3	941200300002		Label	1		
4	537847520011		Identification Plat	1		
5	941200300001		Label	2		
6	941200100006		Label	1		
7	941200400013		Label	1		
8	941200300018		Label	1		
9	941200300003		Label	1		

Appendix

01 Electrical diagram (manual steering, ZAPI) (537846045501)

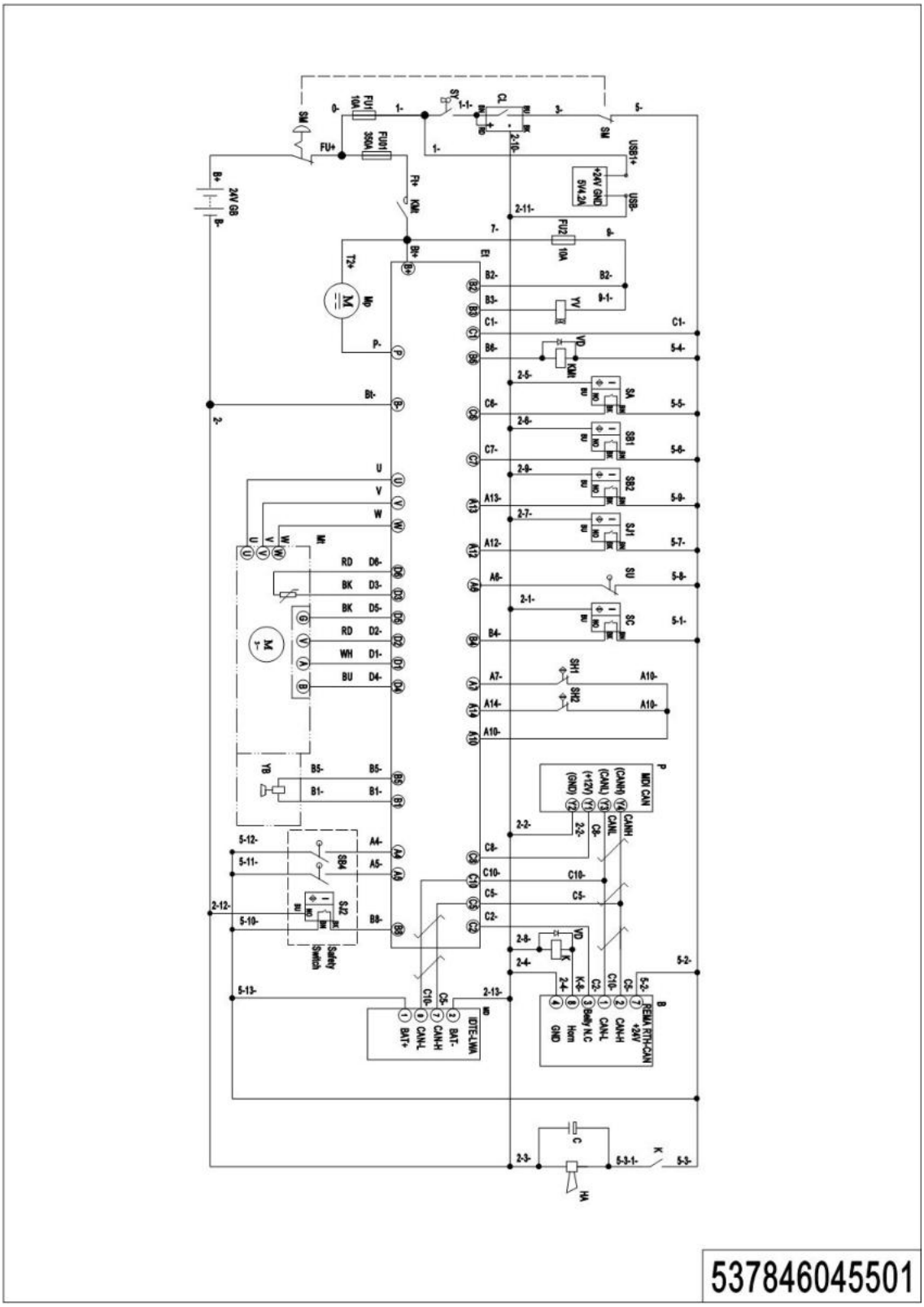

02 Electrical diagram (manual steering, QT) (537846045502)

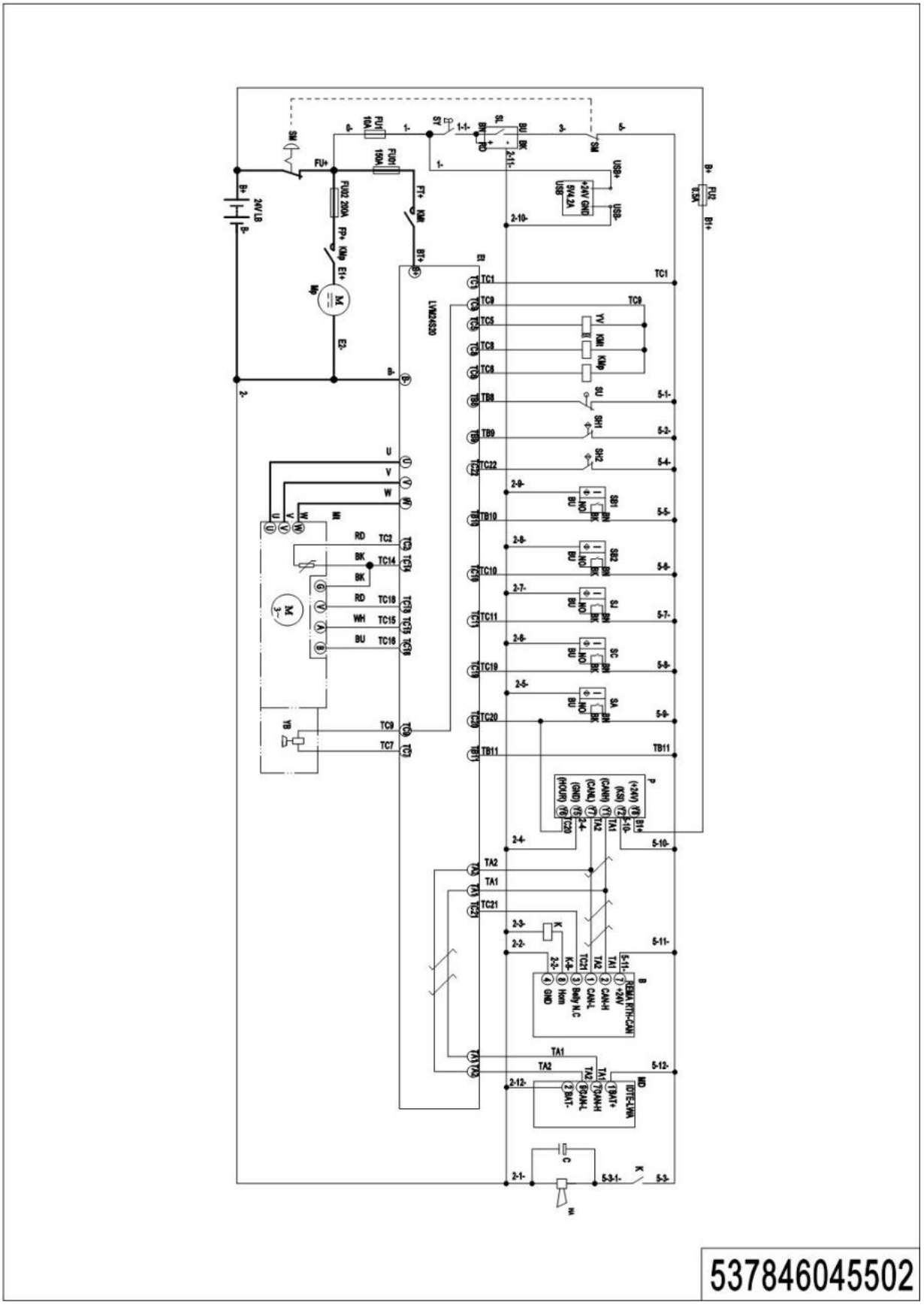

03 Electrical diagram (EPS, ZAPI) (537846045503)

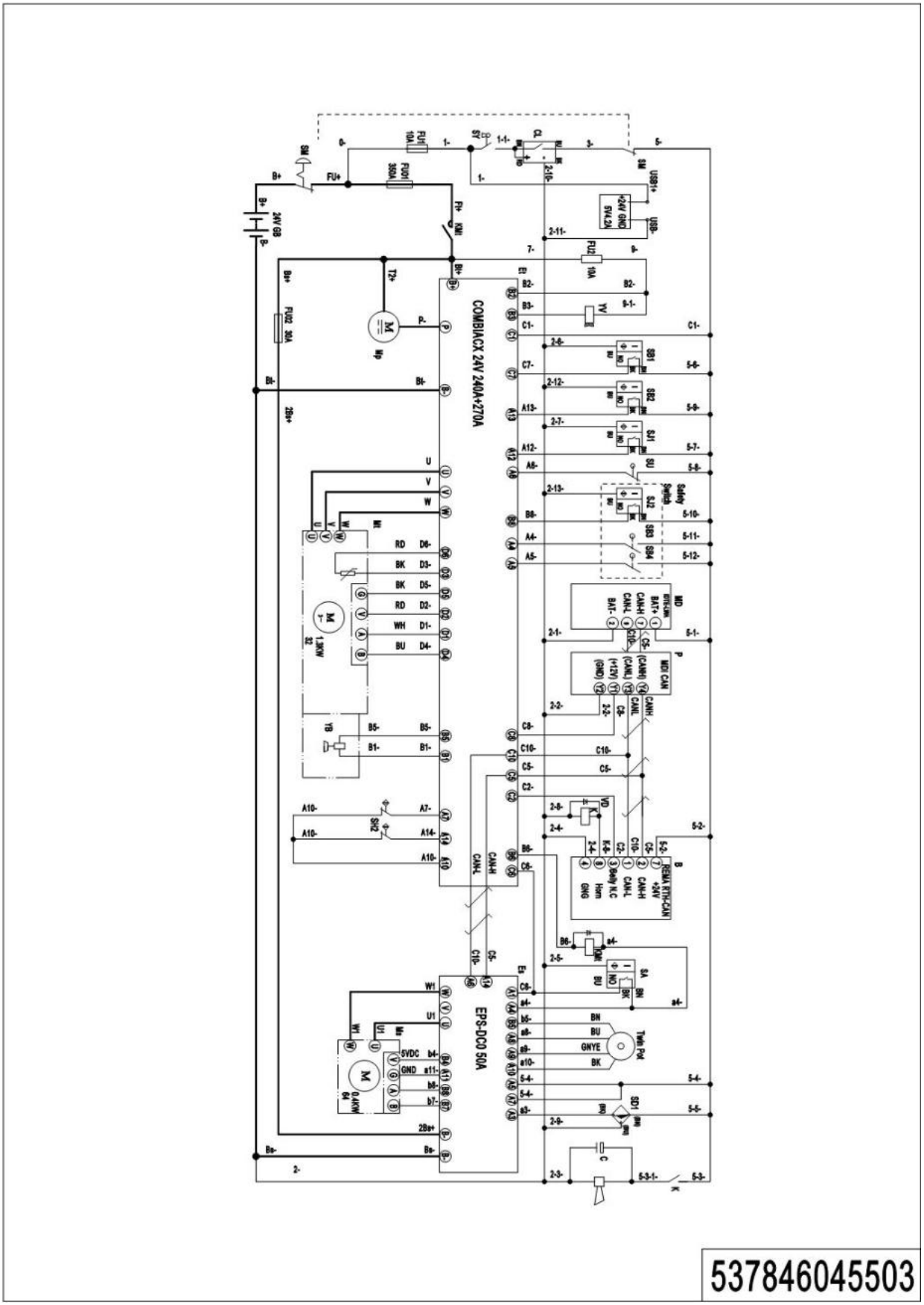

04 Electrical diagram (EPS, QT) (537846045504)

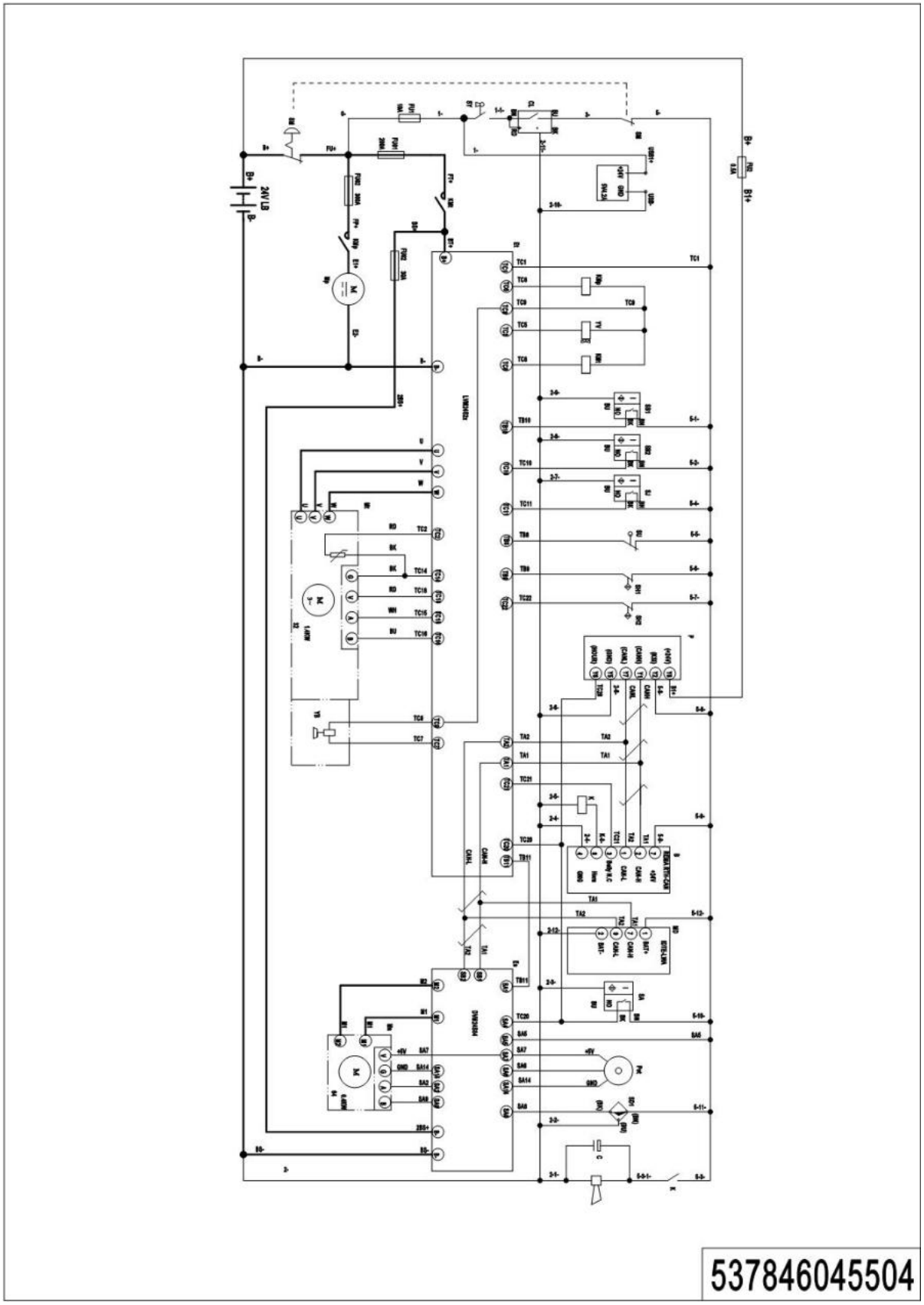

05 Electrical diagram (manual steering,ZAPI,Li) (537846045505)

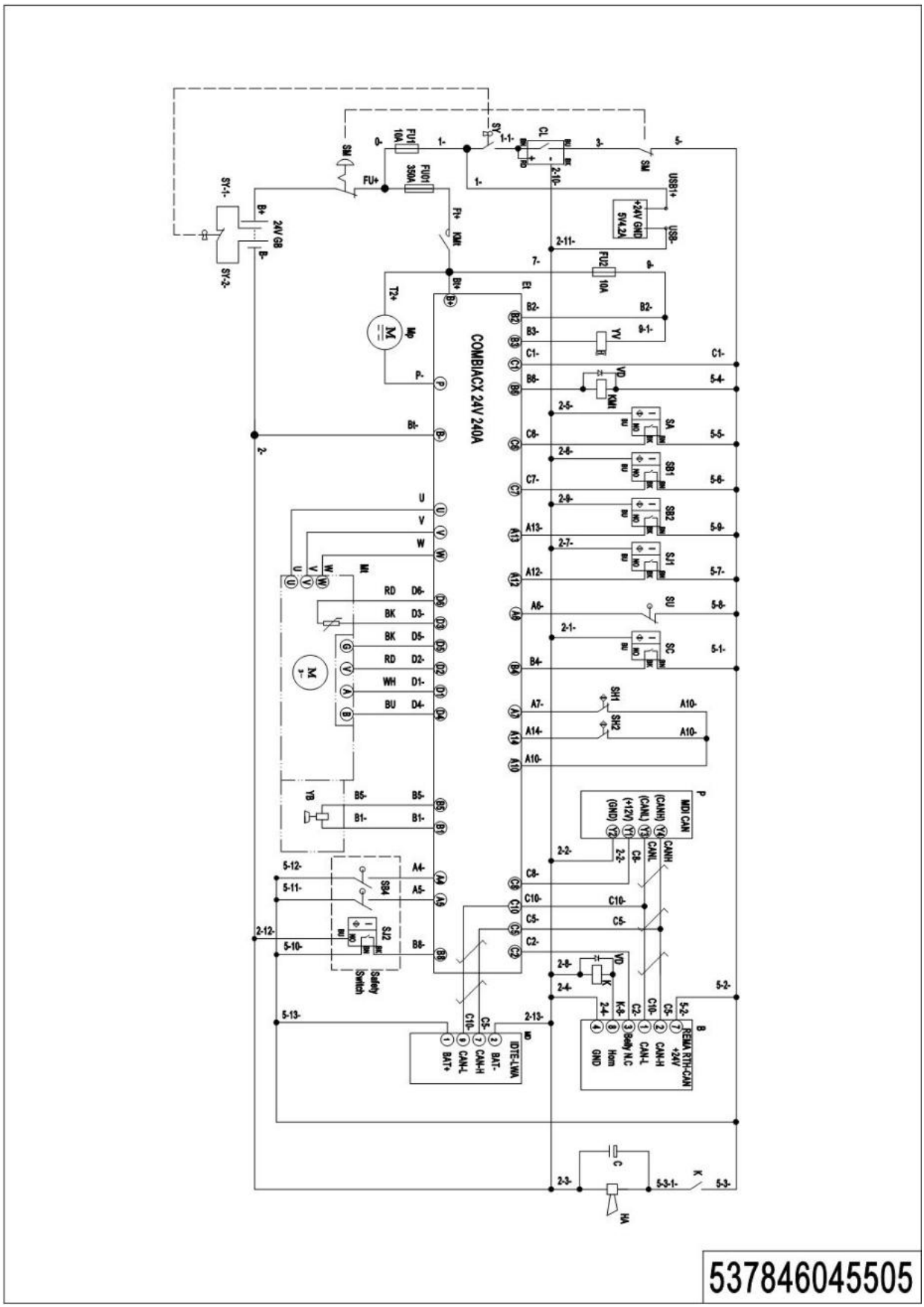

1= Supply as package. 2= Supply with constraints. 3= Phasing-out supply. 4= Supply as assembly. 5= Check other tables.

06 Electrical diagram (manual steering,QT,Li) (537846045506)

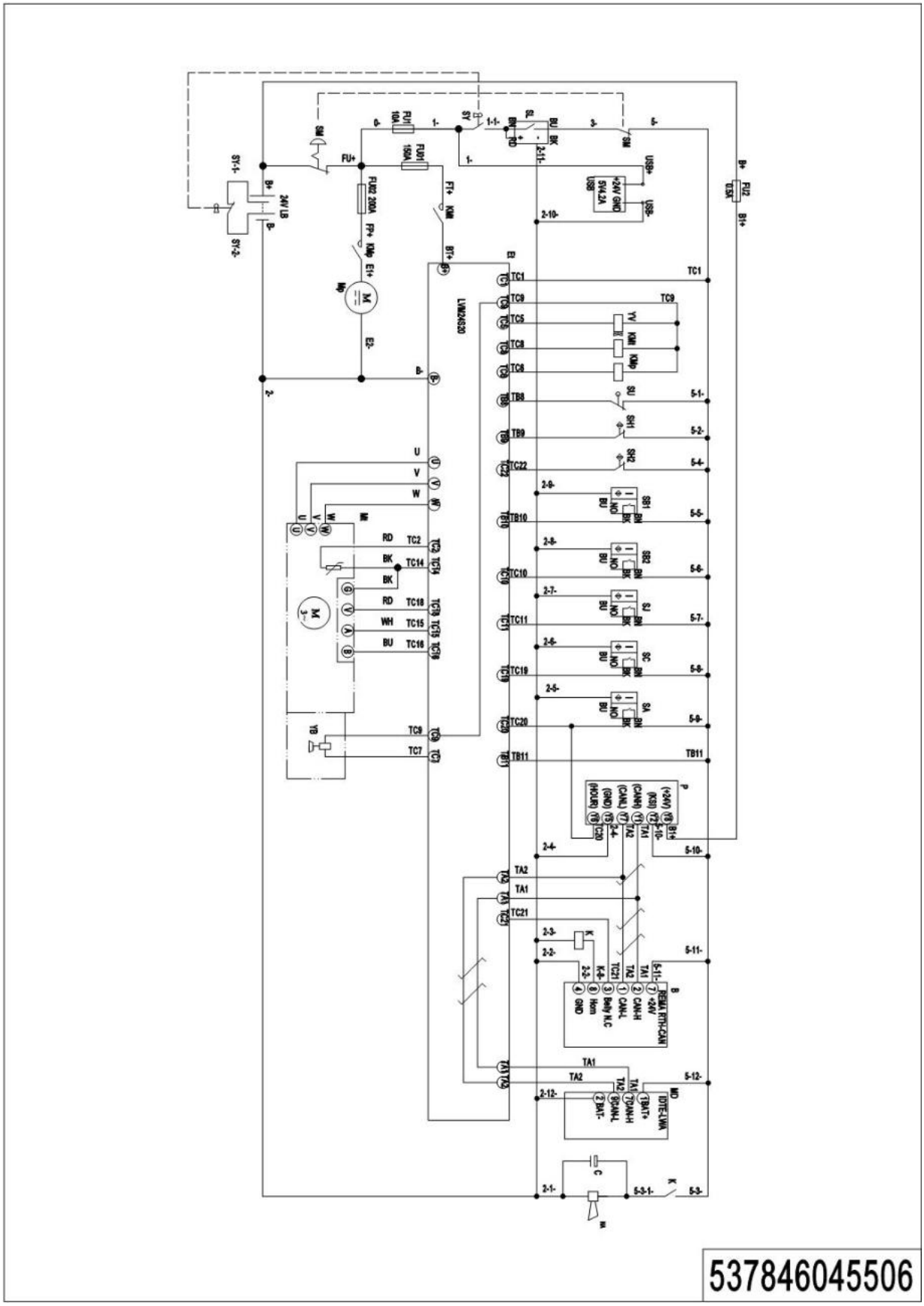

07 Electrical diagram (EPS,ZAPI,Li) (537846045507)

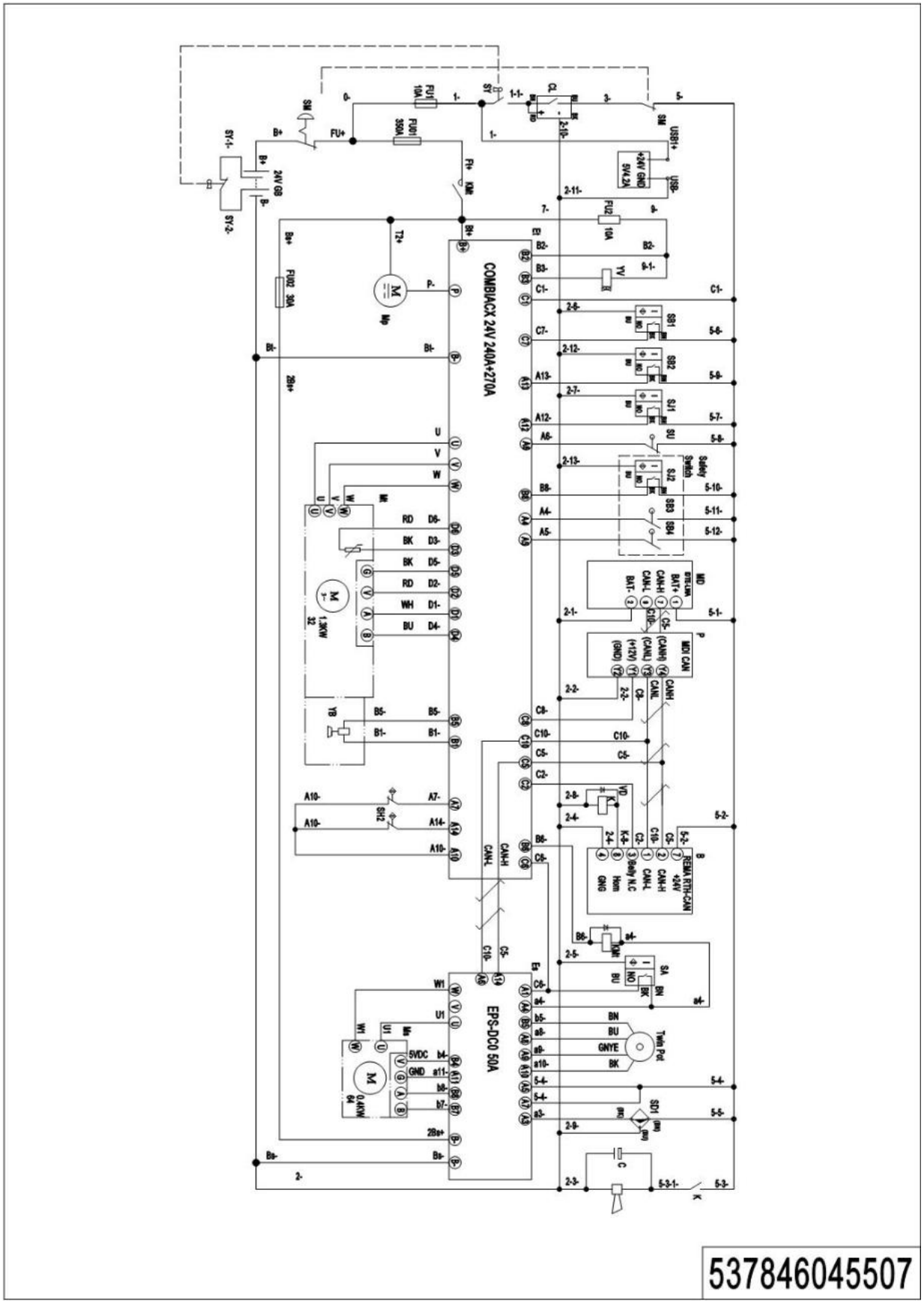

1= Supply as package. 2= Supply with constraints. 3= Phasing-out supply. 4= Supply as assembly. 5= Check other tables.

08 Electrical diagram (EPS,QT,Li) (537846045508)

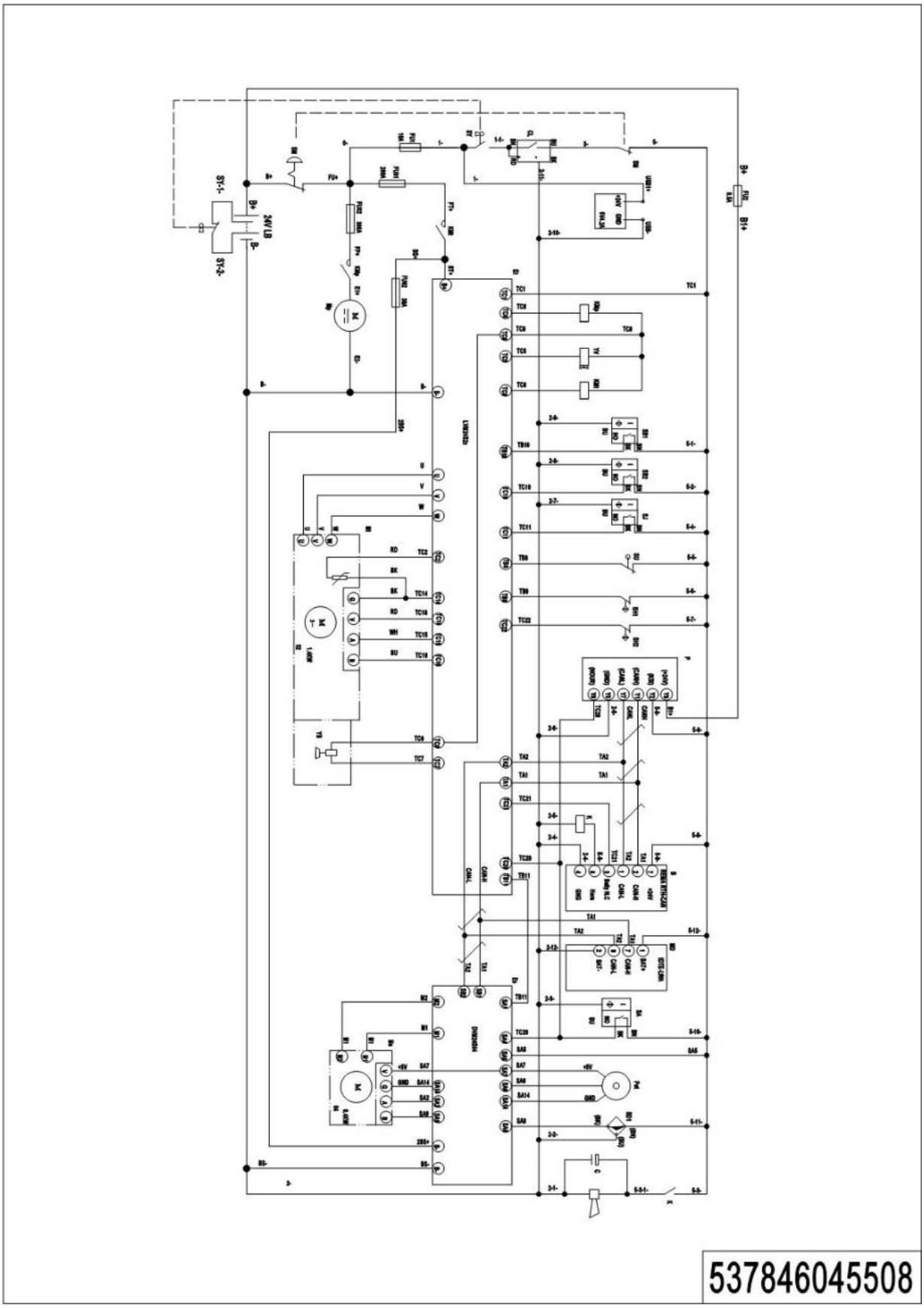

1= Supply as package. 2= Supply with constraints. 3= Phasing-out supply. 4= Supply as assembly. 5= Check other tables.

09 Electrical diagram (manual steering, EN1175-2020) (537846045509)

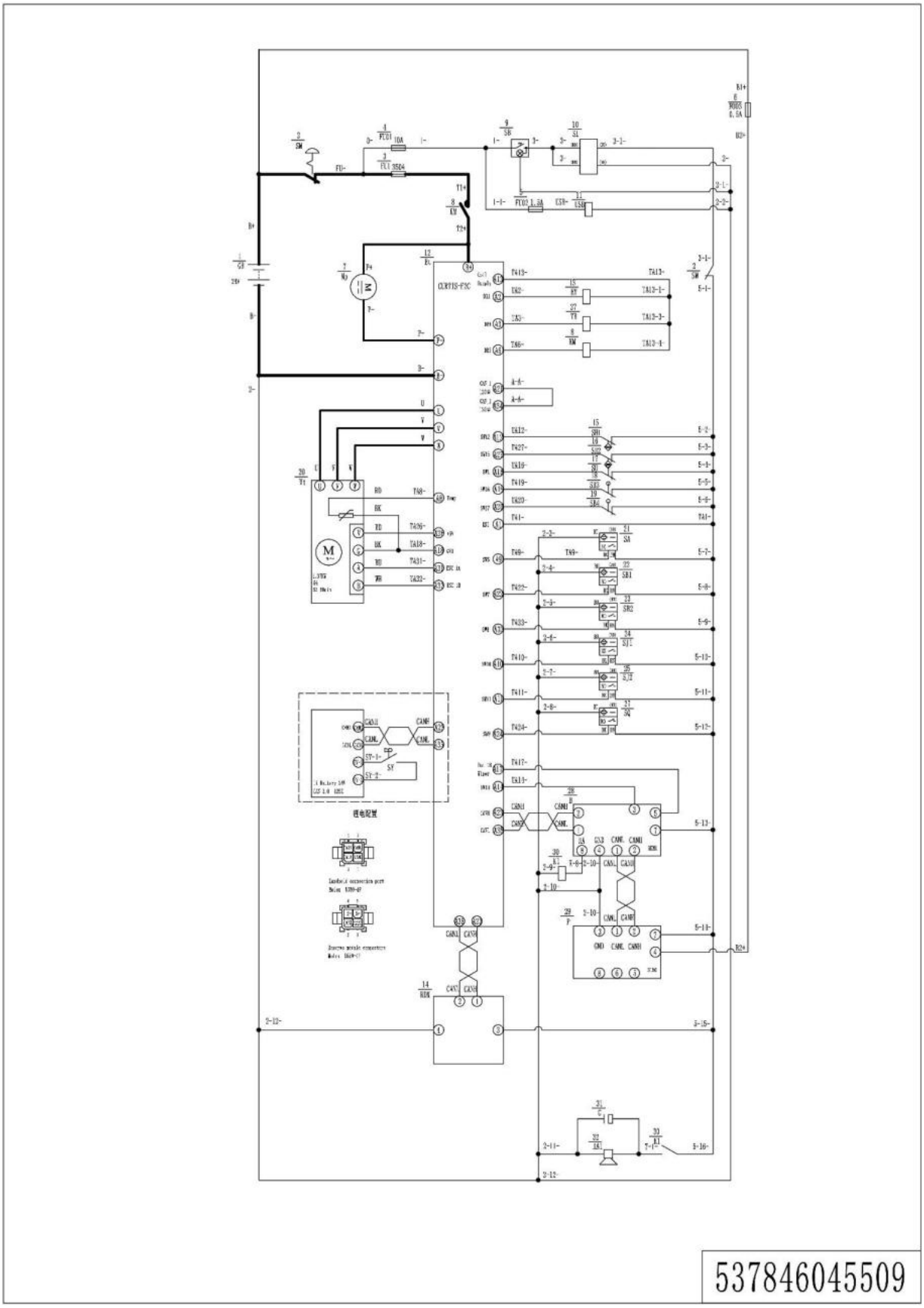

10 Electrical diagram (EPS, EN1175-2020) (537846045510)

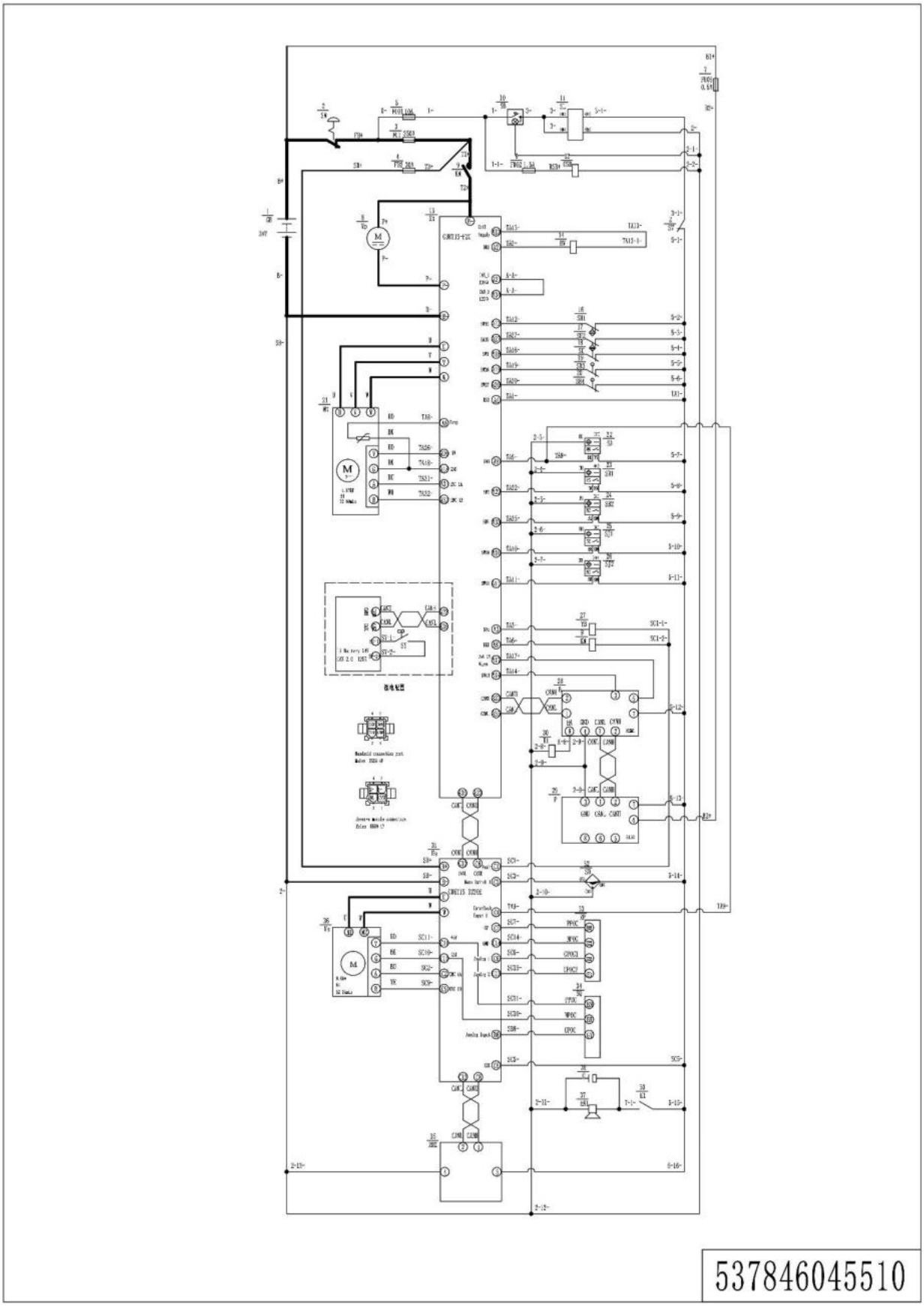

11 Hydraulic diagram (535946045503)

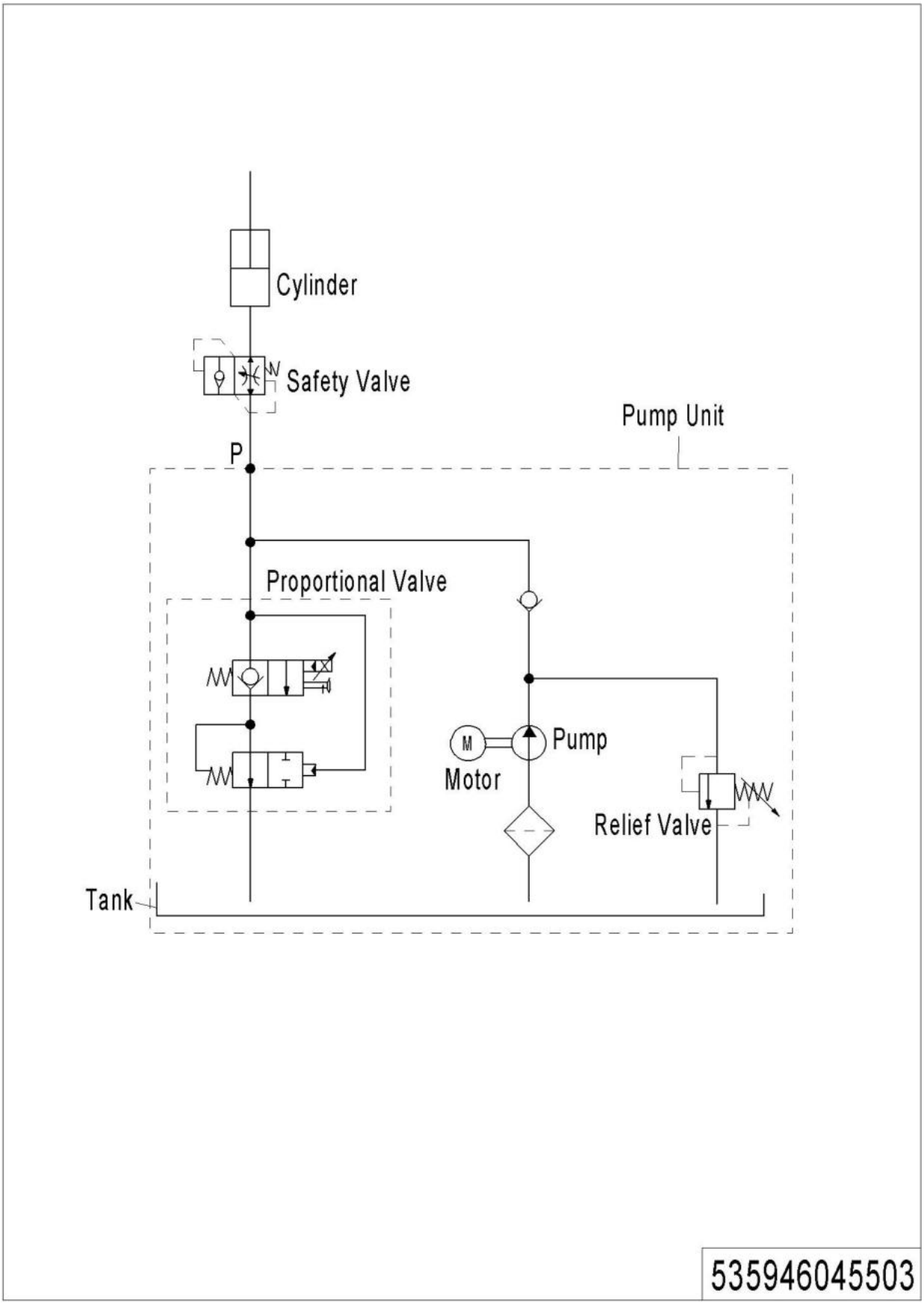

12 Easy worn parts list

No.	Item Code	Item Description	Qty.	Chapter/ Section/ Number
1	940300400005	Wheel Φ230x70	1	Chapter1/01/7 Chapter1/03/7
2	505633510000	Proximity Switch	1	Chapter1/01/19
3	537813520020	Bushing	4	Chapter1/01/30 Chapter1/01/31
4	940500200003	Bushing	2	Chapter3/03/2
5	940500200008	Bushing	2	Chapter3/02/12Chapter3/04/6
6	535933510001	Proximity Switch	2	Chapter3/03/7
7	940400100037	Air Spring	1	Chapter3/03/17
8	535933510002	Proximity Switch	1	Chapter3/04/16
9	940200300004	Compound Roller	4	Chapter3/05/1
10	534798510005	Seal Kit	1	Chapter4/01/7.01
11	940200300004	Compound Roller	8	Chapter4/01/38 Chapter4/02/36
11				Chapter4/03/45 Chapter4/04/60
12	534798510002	Seal Kit	2	Chapter4/02/12.01
13	534798510003	Seal Kit	1	Chapter4/02/48.01
14	534798510004	Seal Kit	2	Chapter4/03/17.01
15	534798510000	Seal Kit	2	Chapter4/04/16.01
16	910700200019	Bearing	1	Chapter4/04/25
17	534798510001	Seal Kit	1	Chapter4/04/58.01
18	940400100001	Air Spring	1	Chapter5/01/10
19	940400100045	Air Spring	1	Chapter5/01/10
20	940500200002	Bushing	2	Chapter5/01/14
21	940300300009	Wheel Φ84x70	4	Chapter5/04/1.01
22	910700400004	Bearing	2	Chapter5/04/3
23	910700200019	Bearing	2	Chapter5/04/1.02Chapter5/04/11.01
24	940300300019	Wheel Φ124x60	1	Chapter5/05/11.02
25	506733510000	Potentiometer	1	Chapter5/06/9
26	921800100037	Sensor	1	Chapter5/06/9
27	505633010028	Potentiometer	1	Chapter5/06/9
28	920100200011	Fuse	1	Chapter6/05/13

1= Supply as package. 2= Supply with constraints. 3= Phasing-out supply. 4= Supply as assembly. 5= Check other tables.

12 Easy worn parts list continuation

No.	Item Code	Item Description	Qty.	Chapter/ Section/ Number
29	920100100001	Fuse	1	Chapter6/10/7Chapter6/13/8
30	920100100013	Fuse	1	Chapter6/08/5Chapter6/10/5
30				Chapter6/12/7Chapter6/13/9
31	920100200002	Fuse	1	Chapter6/08/7Chapter6/09/8Chapter6/10/
31				Chapter6/11/8Chapter6/13/6
32	920100100008	Fuse	1	Chapter6/09/6Chapter6/11/6
33	920100100007	Fuse	1	Chapter6/09/4Chapter6/11/4
34	920800100011	Relay	1	Chapter6/08/10Chapter6/09/11
34				Chapter6/10/11Chapter6/11/11
34				Chapter6/12/10Chapter6/13/12