Print Number: Print Date:

Electric Pallet Stacker PS16DN

PARTS MANUAL

562646020104

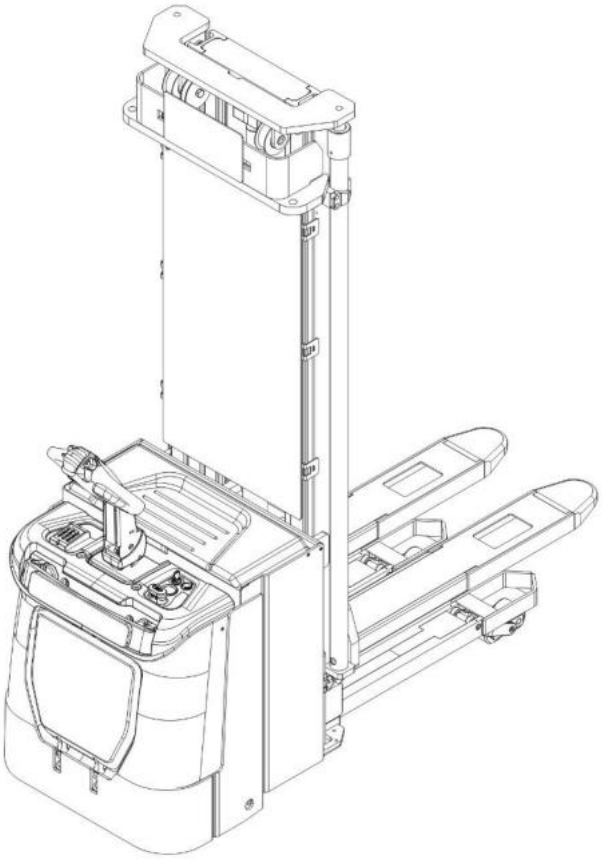

Version V03

Truck Identification Number From:

Parts Manual

PS16DN-PM04EN

Please order spare parts from authorized dealers of our company.
In order to avoid wrong delivery, all the orders for spare parts should specify the following items:
- Truck model, identification number and manufacture year.
- Orders for spare parts of mast, hydraulic transmission unit, steering axle, motor, etc. shall indicate the manufacture number of these parts.
- Codes for our company spare parts are shown in the table of parts manual. Please also pay attention to the description of supply status, order quantity, etc. (check the number listed in "Mark" column of the parts manual).

"Mark" Column:
The unmarked indicates the parts are in short supply cycle.
Number 1: supply as package. Indicating these that parts are small parts and seal parts, which are supplied in package unit and in short supply cycle.
Number 2: supply with constraints. Indicating that these spare parts are not in stock and will be prepared for production after receiving the order from customers, which are in long supply cycle.
Number 3: phasing-out supply. Indicating that these parts will be replaced by new parts due to technical improvements and the current stock will not be available when these parts run out. Please check the description of technical improvements notice.
Number 4: supply as assembly. Indicating that these parts are assembly parts defined by manufacture process, which cannot be supplied as a single part.
Number 5: check other tables.

This parts manual is the property of our company and can be shared under the confidential agreement only, our company has the right to claim for compensation of any unauthorized use. Copy without permission is not allowed. Figures in the manual are not limited by the original design. our company reserves the right to improve the products for continuous technology progress.

Table of Contents

Chapter 1: Drive System 5
01 Manual steering drive unit (535946013501) 5
01 Manual steering drive unit (535946013501) Continuation 7
02 Drive assembly 1.4kW (535946013502) 9
03 Electric steering drive unit (562646013501) 11
04 Drive steering assembly 1.4kW (535946013504) 13
Chapter 2: Hydraulic System 15
01 Hydraulic circuit (three-stage FFL) (562646024501) 15
01 Hydraulic circuit (three-stage FFL) (562646024501) Continuation 17
02 Hydraulic circuit (three-stage standard) (562646024502) 19
02 Hydraulic circuit (three-stage standard) (562646024502) Continuation 21
03 Hydraulic circuit (two-stage mast) (562646024503) 23
03 Hydraulic circuit (two-stage mast) (562646024503) Continuation 25
04 Pump unit (HPI, 3.2KW) (534746023501) 27
05 Pump unit (VIBO, 3.2KW) (534746023502) 29
Chapter 3: Truck Structure 31
01 Chassis (562646021501) 31
01 Chassis (562646021501) Continuation 33
02 Fork frame (562646038501) 35
02 Fork frame (562646038501) Continuation 37
03 Protective arm (535946017501) 39
04 Pedal (535946018002) 41
05 Fork Carriage (562046038001) 43
Chapter 4: Gantry System 45
01 Two-stage mast, standard (562646044001) 45
01 Two-stage mast, standard (562646044001) Continuation 47
02 Two-stage mast, FFL (562646043501) 49
02 Two-stage mast, FFL (562646043501) Continuation 1 51
02 Two-stage mast, FFL (562646043501) Continuation 2 53
03 Three-stage mast, standard (562646045001) 55
03 Three-stage mast, standard (562646045001) Continuation 57
04 Three-stage mast, FFL (562646044501) 59
04 Three-stage mast, FFL (562646044501) Continuation 1 61
04 Three-stage mast, FFL (562646044501) Continuation 2 63
Chapter 5: Steering, Braking Systems and Wheels 65
01 Tiller (535946011001) 65
02 Tiller (535946011010) 67
03 Load wheel (562646017001) 69
04 Side wheel (562646016501) 71
Chapter 6: Electrical Components 73
01 Display assembly (562646010001) 73

02 Electrical wiring harness (manual steering) (562646033010) 75
03 Electrical wiring harness (electric steering) (562646033011) 77
04 Controller assembly (manual steering) (562646033012) 79
05 Controller assembly (electric steering) (562646033013) 81
06 Charger (562646036501) 83
08 Traction battery (534746037001) 85
09 lithium battery(562646037002) 86
Chapter 7: Special Equipment 87
01 Load Backrest (532646040501)(Optional) 87
Chapter 8: Others 89
01 Labels and Decals (Europe) (562646047001) 89
Appendix 91
01 Electrical diagram (manual steering) 91
02 Electrical diagram (electric steering) 92
03 Hydraulic diagram 93
04 List of consumable parts 94

Chapter 1: Drive System

01 Manual steering drive unit (535946013501)

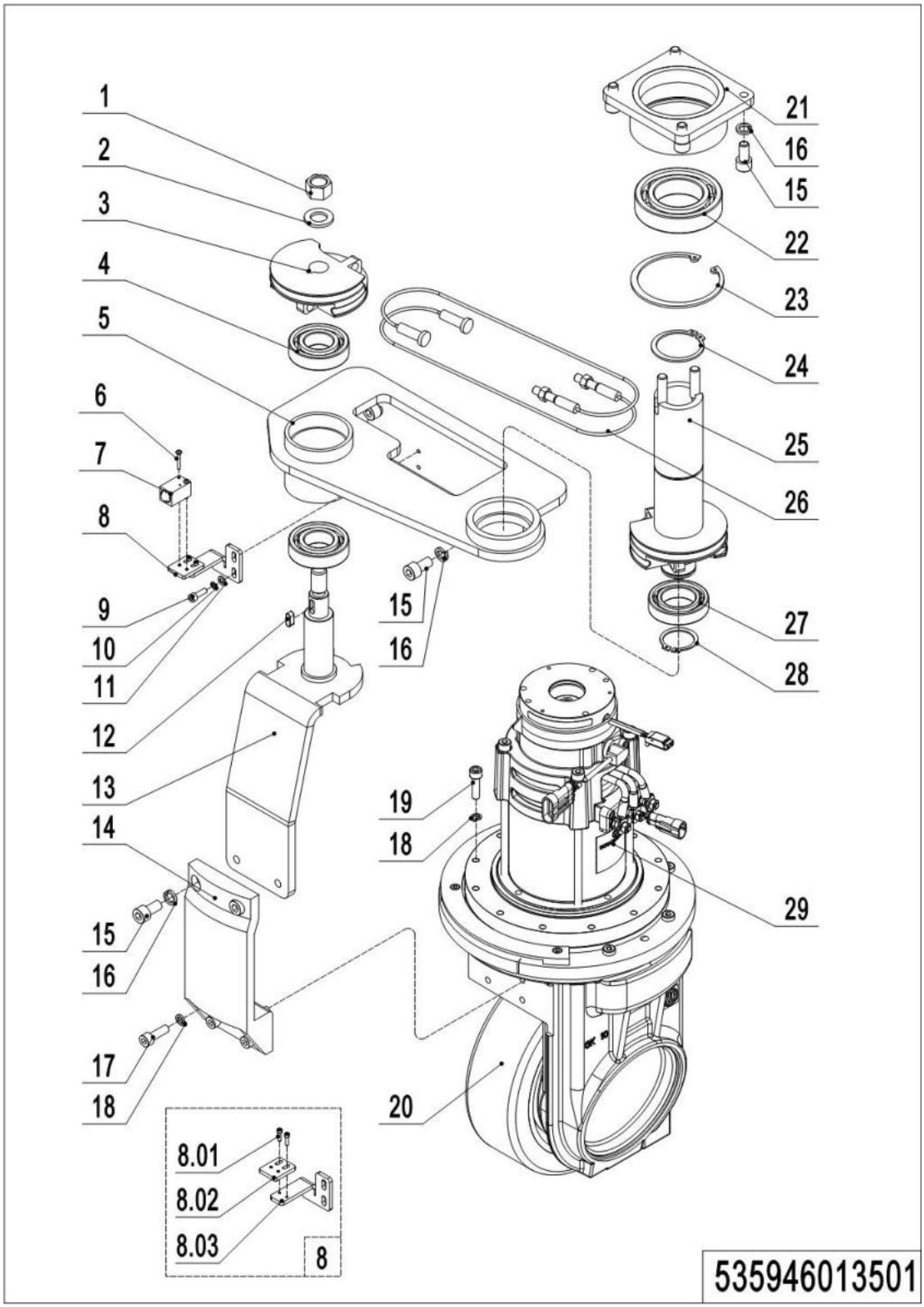

01 Manual steering drive unit (535946013501)

No.	Item Code	Mark	Item Description	Qty.	Substitute	Note
1	910300100010	1	Nut	1		
2	910400100010	1	Flat Washer	1		
3	535931220002		Dial	1		
4	910700200021		Bearing	2		
5	535931210002	2	Bracket	1		
6	910200500015	1	Screw	2		
7	535933510004		Proximity Switch	1		
8	535998510022		Mounting Plate Kits	1		
8.01	910200200003		Screw	2		
8.02	537813520017		Mounting Plate	1		
8.03	535931220004		Mounting Plate	1		
9	910200200023	1	Screw	6		
10	910400500004	1	Spring Washer	6		
11	910400100004	1	Flat Washer	4		
12	910600800011		Flat Key	1		
13	535931210001	2	Plate	1		
14	535931220001		Bracket	1		
15	910200200075	1	Screw	10		
16	910400500007	1	Spring Washer	10		
17	910200200058	1	Screw	4		
18	910400500006	1	Spring Washer	17		
19	910200200060	1	Screw	9		
20	940300400034		WheelΦ230x75	1		
21	910700200025		Bearing	2		
22	910401400024	1	Circlip	2		
23	535931210004	2	Fixing Base	1		
24	910401300024	1	Circlip	1		
25	535931210005	2	handle Spindle	1		
26	535931210003		Wirerope	2		
27	910700200007		Bearing	1		

1= Supply as package. 2= Supply with constraints. 3= Phasing-out supply. 4= Supply as assembly. 5= Check other tables.

01 Manual steering drive unit (535946013501) Continuation

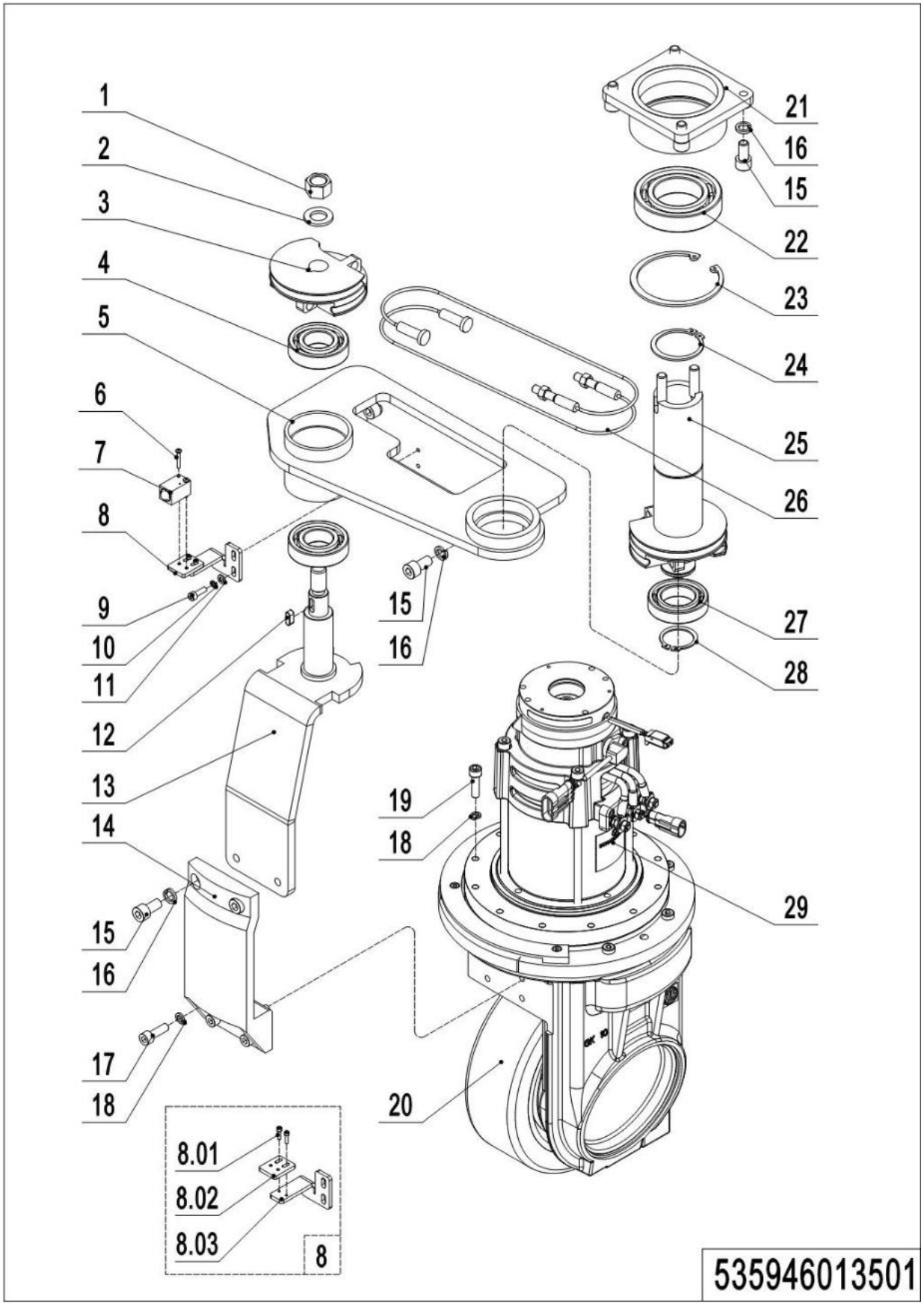

01 Manual steering drive unit (535946013501) Continuation

No.	Item Code	Mark	Item Description	Qty.	Substitute	Note
28	910401300018	1	Circlip	1		
29	535998510101	5	Drive Unit	1		**See 535946013502**

1= Supply as package. 2= Supply with constraints. 3= Phasing-out supply. 4= Supply as assembly. 5= Check other tables.

02 Drive assembly 1.4kW (535946013502)

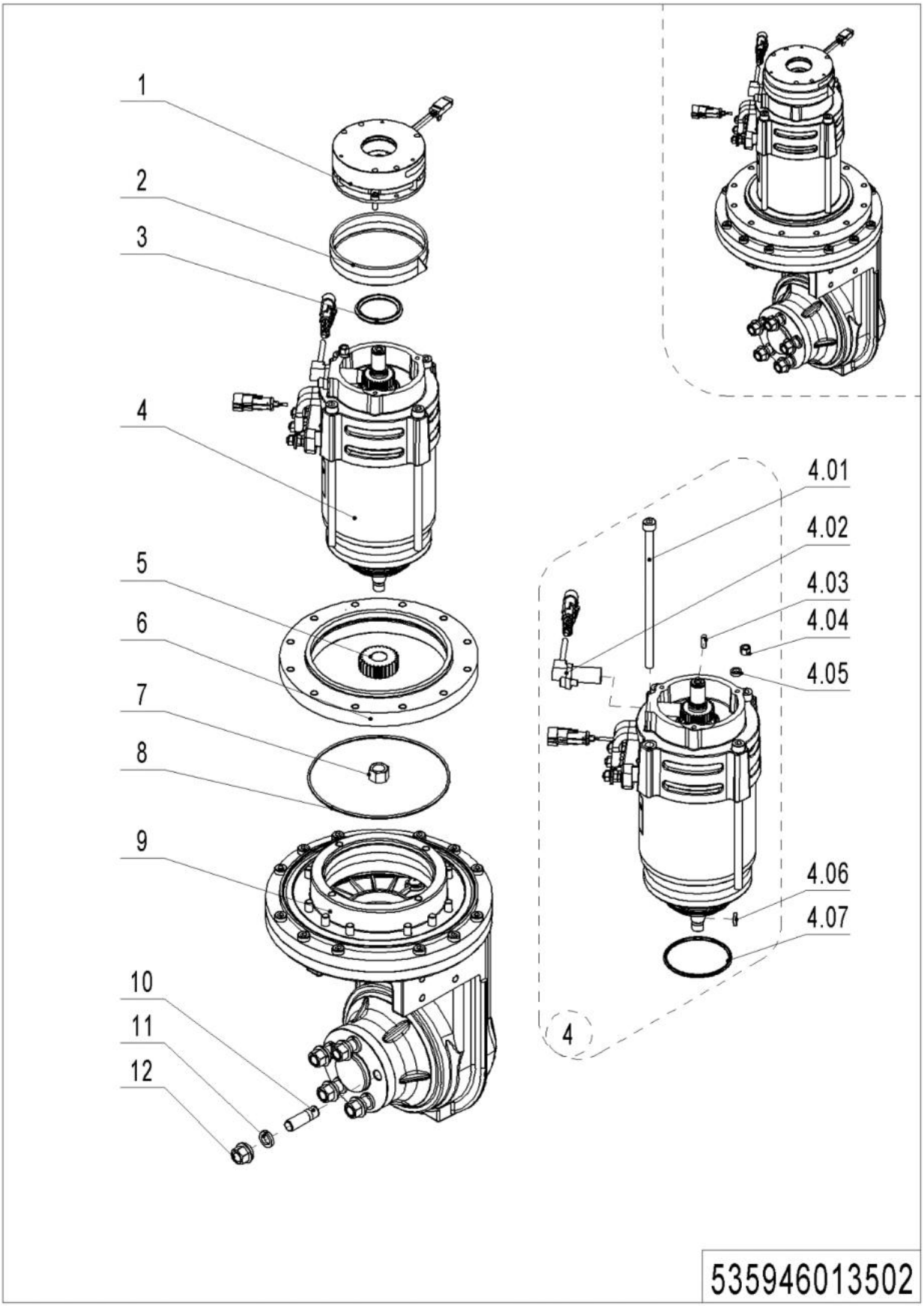

1= Supply as package. 2= Supply with constraints. 3= Phasing-out supply. 4= Supply as assembly. 5= Check other tables.

02 Drive assembly 1.4kW (535946013502)

No.	Item Code	Mark	Item Description	Qty.	Substitute	Note
1	535998510001	2	Brake	1		
2	535998520001	4	Division Plate	1		
3	535998520000	4	Locating Ring	1		
4	535998510003	2	Motor	1		
4.01	535998520002	2	Screw	4		
4.02	535998510002	2	Sensor	1		
4.03	535998520005	2	Feather Key	1		
4.04	535998520003	2	Nut	1		
4.05	535998520004	2	Safety Element	1		
4.06	535998520006	2	Key	1		
4.07	535998520007	2	O-Ring	1		
5	535998520014	2	Gear	1		
6	535998520010	2	Plate	1		
7	535998520008	2	Nut	1		
8	535998520009	2	O-Ring	1		
9	535998510004	2	Gearbox Assembly	1		
10	535998520011	2	Bolt	5		
11	535998520012	2	Washer	5		
12	535998520013	2	Nut	5		

1= Supply as package. 2= Supply with constraints. 3= Phasing-out supply. 4= Supply as assembly. 5= Check other tables.

03 Electric steering drive unit (562646013501)

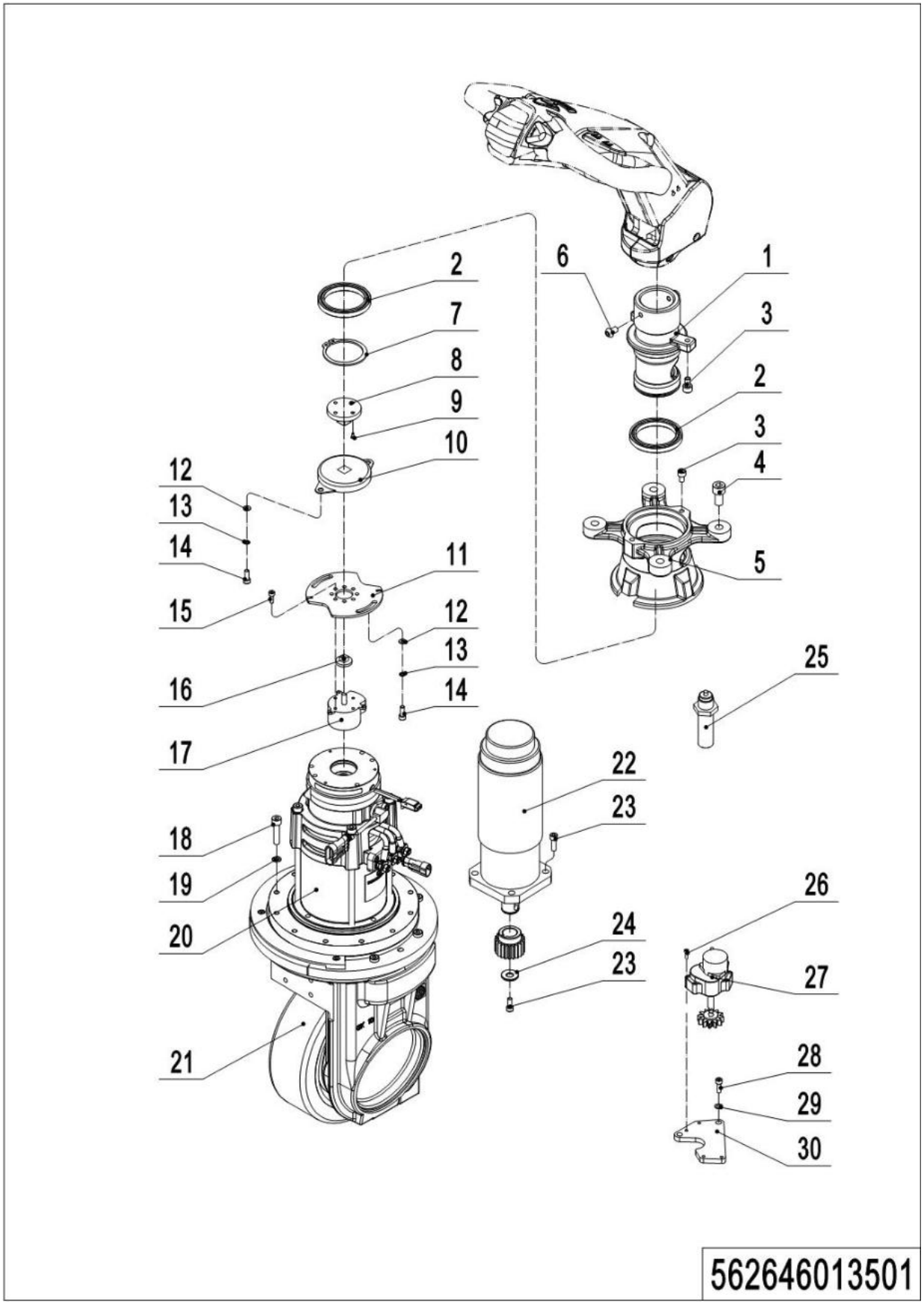

1= Supply as package. 2= Supply with constraints. 3= Phasing-out supply. 4= Supply as assembly. 5= Check other tables.

03 Electric steering drive unit (562646013501)

No.	Item Code	Mark	Item Description	Qty.	Substitute	Note
1	535931520001	2	Bracket	1		
2	910700200041		Bearing	2		
3	910200200032	1	Screw	3		
4	910200200075	1	Screw	4		
5	505631520002		Fixing Base	1		
6	910200300016	1	Screw	2		
7	910401300024	1	Circlip	1		
8	505631520005		Link Block	1		
9	910200200013	1	Screw	1		
10	940801200001		Rotary Damper	1		
11	535931520002		Mounting Plate	1		
12	910400100004	1	Flat Washer	4		
13	910400500004	1	Spring Washer	4		
14	910200200021	1	Screw	4		
15	910200200014	1	Screw	4		
16	505931520002		Link Block	1		
17	921800100037		Sensor	1		
18	910200200060	1	Screw	10		
19	910400500006	1	Spring Washer	10		
20	940900500008		Steering Unit	1		**See 535946013504**
21	940300400034		WheelΦ230x75	1		
22	535998510026		Motor	1		
23	910200200057	1	Screw	5		
24	506713520001	1	Retaining Ring	1		
25	562633510001		Proximity Switch	1		
26	910200200017	1	Screw	4		
27	921800100059		Sensor	1		
28	910200200035	1	Screw	2		
29	910400100005	1	Flat Washer	2		
30	562613520001		Mounting Plate	1		

1= Supply as package. 2= Supply with constraints. 3= Phasing-out supply. 4= Supply as assembly. 5= Check other tables.

04 Drive steering assembly 1.4kW (535946013504)

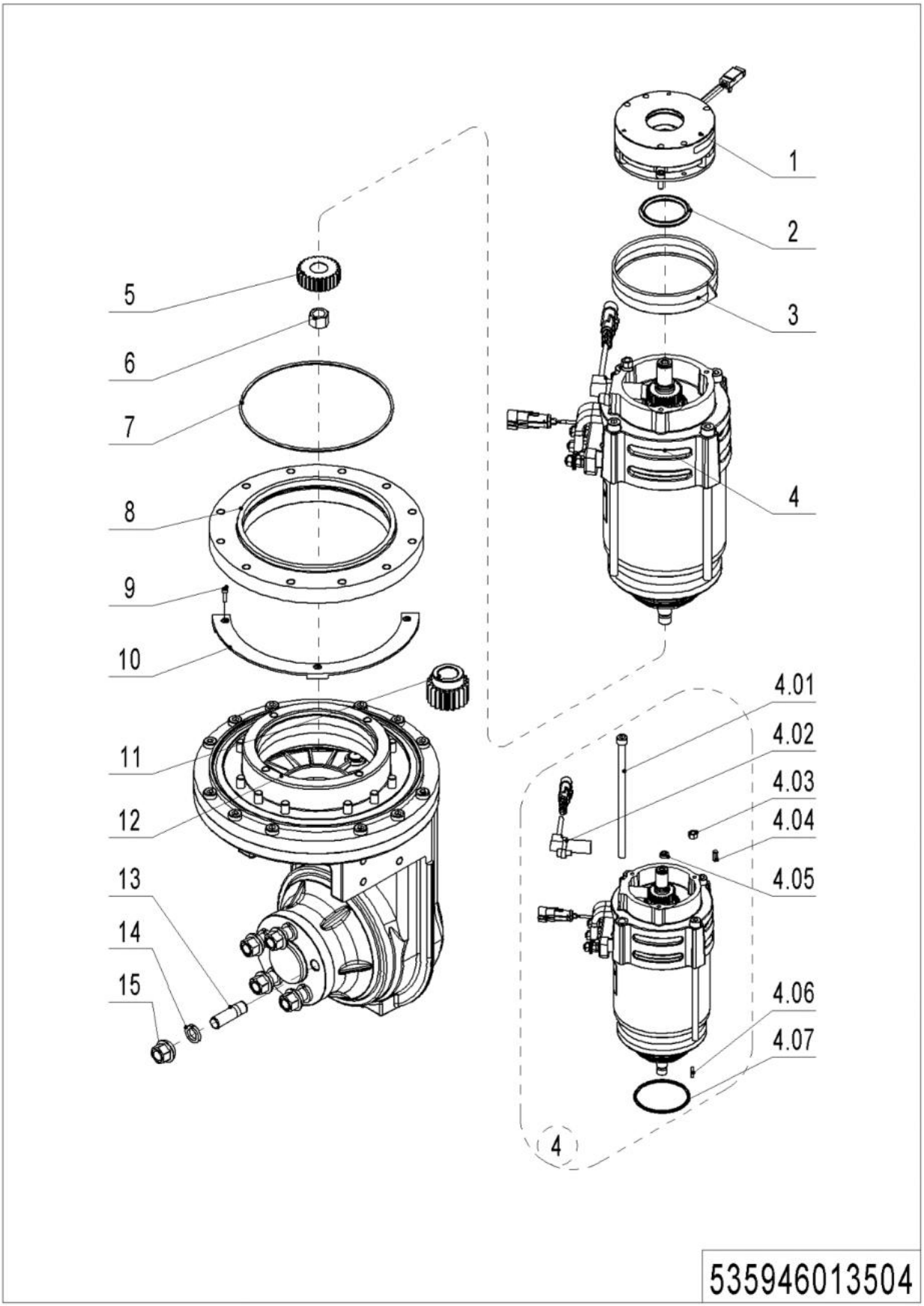

1= Supply as package. 2= Supply with constraints. 3= Phasing-out supply. 4= Supply as assembly. 5= Check other tables.

04 Drive steering assembly 1.4kW (535946013504)

No.	Item Code	Mark	Item Description	Qty.	Substitute	Note
1	535998510001	2	Brake	1		
2	535998520000	4	Locating Ring	1		
3	535998520001	4	Division Plate	1		
4	535998510003	2	Motor	1		
4.01	535998520002	2	Screw	4		
4.02	535998510002	2	Sensor	1		
4.03	535998520003	2	Nut	1		
4.04	535998520005	2	Feather Key	1		
4.05	535998520004	2	Safety Element	1		
4.06	535998520006	2	Key	1		
4.07	535998520007	2	O-Ring	1		
5	535998520014	2	Gear	1		
6	535998520008	2	Nut	1		
7	535998520009	2	O-Ring	1		
8	535998520010	2	Plate	1		
9	535998520015	2	Screw	3		
10	535998520016	2	Limiter	1		
11	535998520017	2	Gear	1		
12	535998510005	2	Gearbox Assembly	1		
13	535998520011	2	Bolt	5		
14	535998520012	2	Washer	5		
15	535998520013	2	Nut	5		

1= Supply as package. 2= Supply with constraints. 3= Phasing-out supply. 4= Supply as assembly. 5= Check other tables.

Chapter 2: Hydraulic System

01 Hydraulic circuit (three-stage FFL) (562646024501)

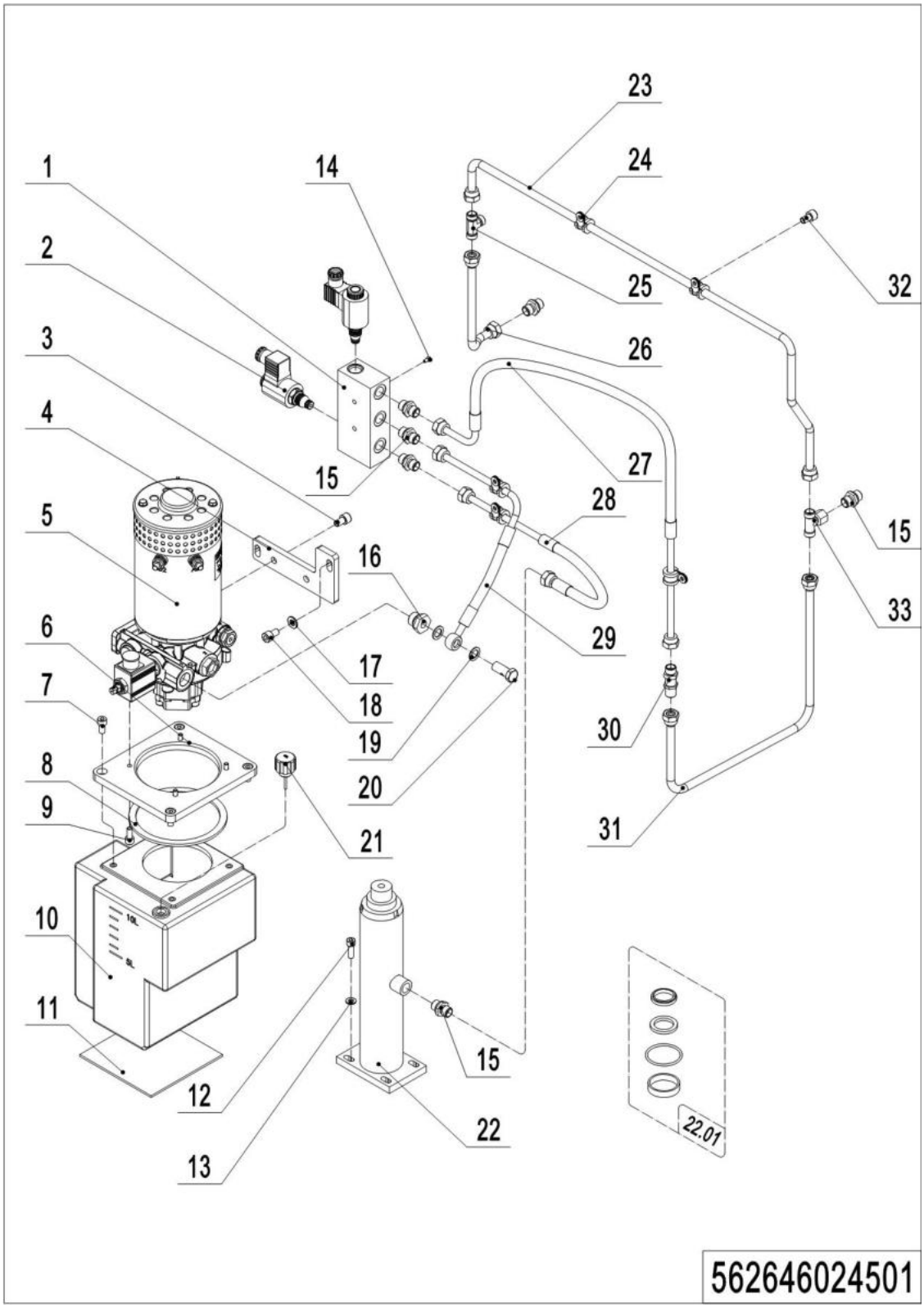

1= Supply as package. 2= Supply with constraints. 3= Phasing-out supply. 4= Supply as assembly. 5= Check other tables.

01 Hydraulic circuit (three-stage FFL) (562646024501)

No.	Item Code	Mark	Item Description	Qty.	Substitute	Note
1	562624520000		Valve Block	1		
2	950700200003		Valve	1		
3	910200200074	1	Screw	2		
4	535924020001		Mounting Plate	1		
5	----------	5	Pump	1		**See 534746023501**
5	----------	5	Pump	1		**See 535946023502**
6	535919020005		Mounting Plate	1		
7	910200200057	1	Screw	4		
8	535919020003		Sealing Gasket	1		
9	910200200034	1	Screw	4		
10	562619010000		Tank	1		
11	531837020012		Crash Pad	1		
12	910200200059	1	Screw	4		
13	910400100006	1	Flat Washer	4		
14	910200200038	1	Screw	2		
15	950400400003		Joint	6		
16	950401200004		Joint	1		
17	910400100007	1	Flat Washer	2		
18	910200200076	1	Screw	2		
19	910800900003	1	Bonded Washer	2		
20	911300300001		Hinge Bolt	1		
21	951100200001		Screw Plug	1		
22	562624510000		Cylinder	1		
22.01	562698510001	1	Seal Kit	1		
23	535924010002		Steel Tube	1		
24	951000100001	1	Hose Clamp	5		
25	950400700002		Joint	1		
26	533545020026		Steel Tube	1		
27	562624510002		Hose	1		

1= Supply as package. 2= Supply with constraints. 3= Phasing-out supply. 4= Supply as assembly. 5= Check other tables.

01 Hydraulic circuit (three-stage FFL) (562646024501) Continuation

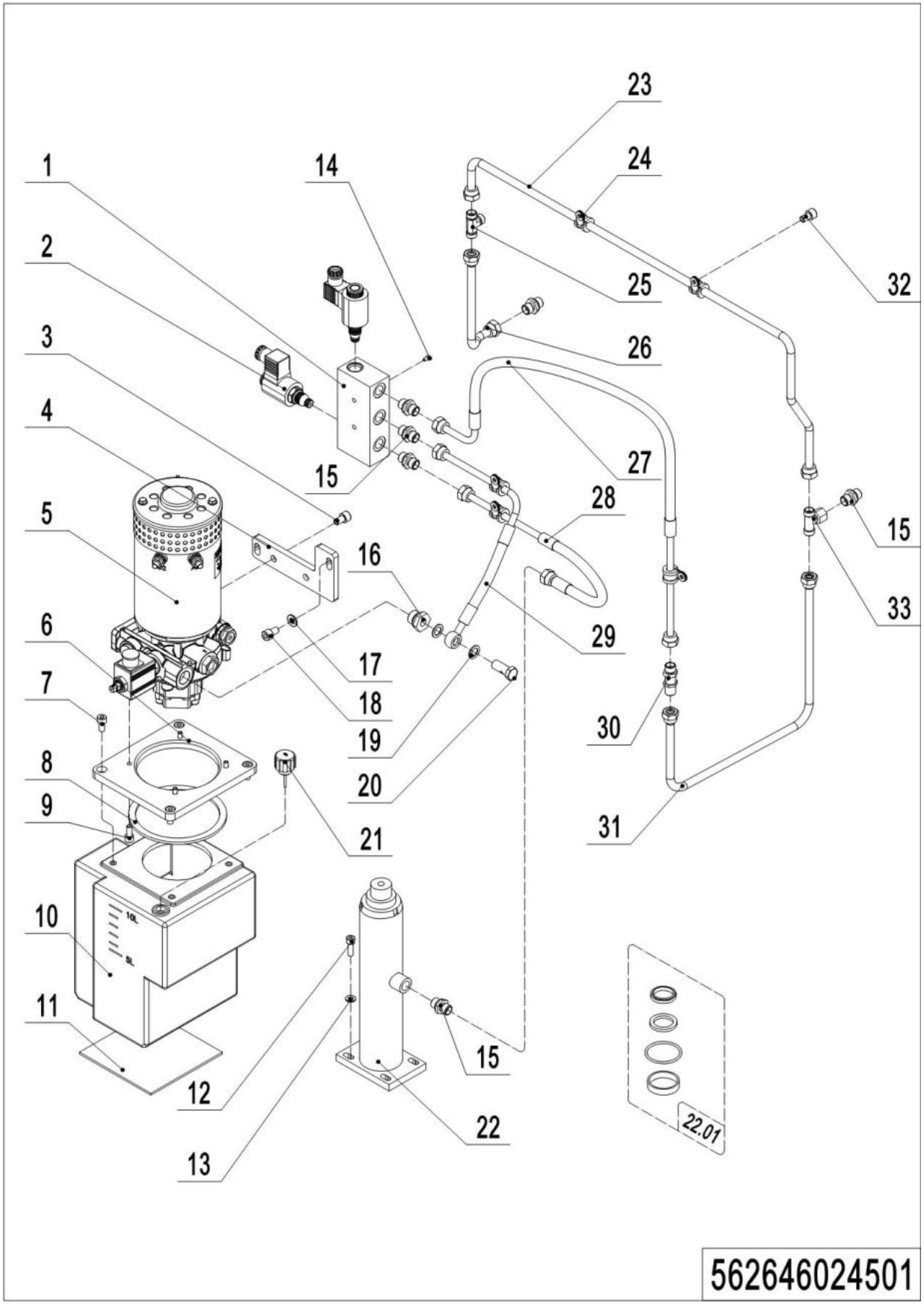

1= Supply as package. 2= Supply with constraints. 3= Phasing-out supply. 4= Supply as assembly. 5= Check other tables.

01 Hydraulic circuit (three-stage FFL) (562646024501) Continuation

No.	Item Code	Mark	Item Description	Qty.	Substitute	Note
28	562624510004		Hose	1		
29	562624510001		Hose	1		
30	950400500001		Joint	1		
31	562624510003		Steel Tube	1		
32	910200200033	1	Screw	5		
33	950400900002		Joint	1		

1= Supply as package. 2= Supply with constraints. 3= Phasing-out supply. 4= Supply as assembly. 5= Check other tables.

02 Hydraulic circuit (three-stage standard) (562646024502)

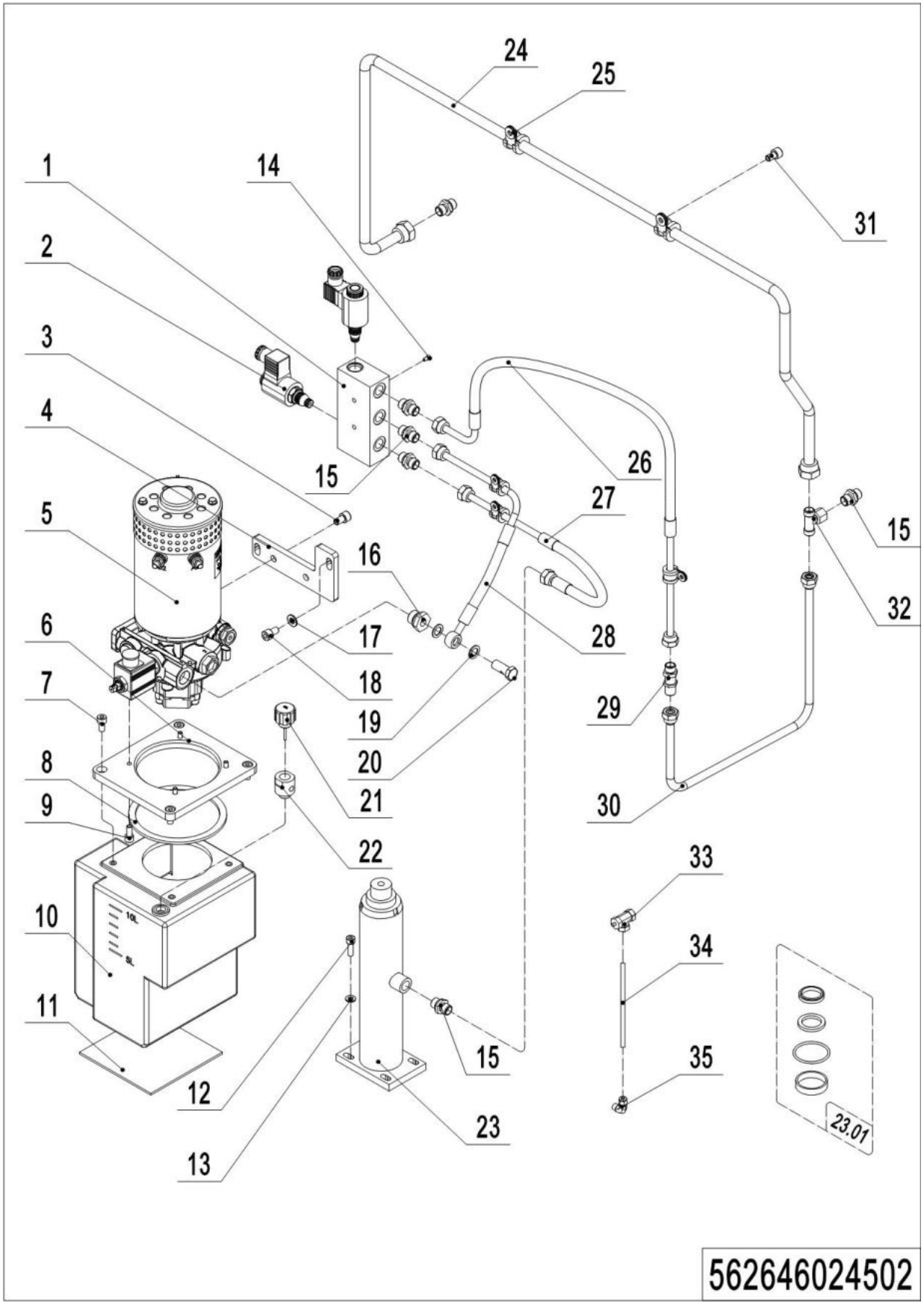

1= Supply as package. 2= Supply with constraints. 3= Phasing-out supply. 4= Supply as assembly. 5= Check other tables.

02 Hydraulic circuit (three-stage standard) (562646024502)

No.	Item Code	Mark	Item Description	Qty.	Substitute	Note
1	562624520000		Valve Block	1		
2	950700200003		Valve	1		
3	910200200074		Screw	2		
4	535924020001		Mounting Plate	1		
5	----------	5	Pump	1		**See 534746023501**
5	----------	5	Pump	1		**See 535946023502**
6	535919020005		Mounting Plate	1		
7	910200200057	1	Screw	4		
8	535919020003		Sealing Gasket	1		
9	910200200034	1	Screw	4		
10	562619010000		Tank	1		
11	531837020012		Crash Pad	1		
12	910200200059	1	Screw	4		
13	910400100006	1	Flat Washer	4		
14	910200200038	1	Screw	2		
15	950400400003		Joint	6		
16	950401200004		Joint	1		
17	910400100007	1	Flat Washer	2		
18	910200200076	1	Screw	2		
19	910800900003	1	Bonded Washer	2		
20	911300300001		Hinge Bolt	1		
21	951100200001		Screw Plug	1		
22	532624020015		Adapter	1		
23	562624510000		Cylinder	1		
23.01	562698510001	1	Seal Kit	1		
24	535924010004		Steel Tube	1		
25	951000100001	1	Hose Clamp	5		
26	562624510002		Hose	1		
27	562624510004		Hose	1		

1= Supply as package. 2= Supply with constraints. 3= Phasing-out supply. 4= Supply as assembly. 5= Check other tables.

02 Hydraulic circuit (three-stage standard) (562646024502) Continuation

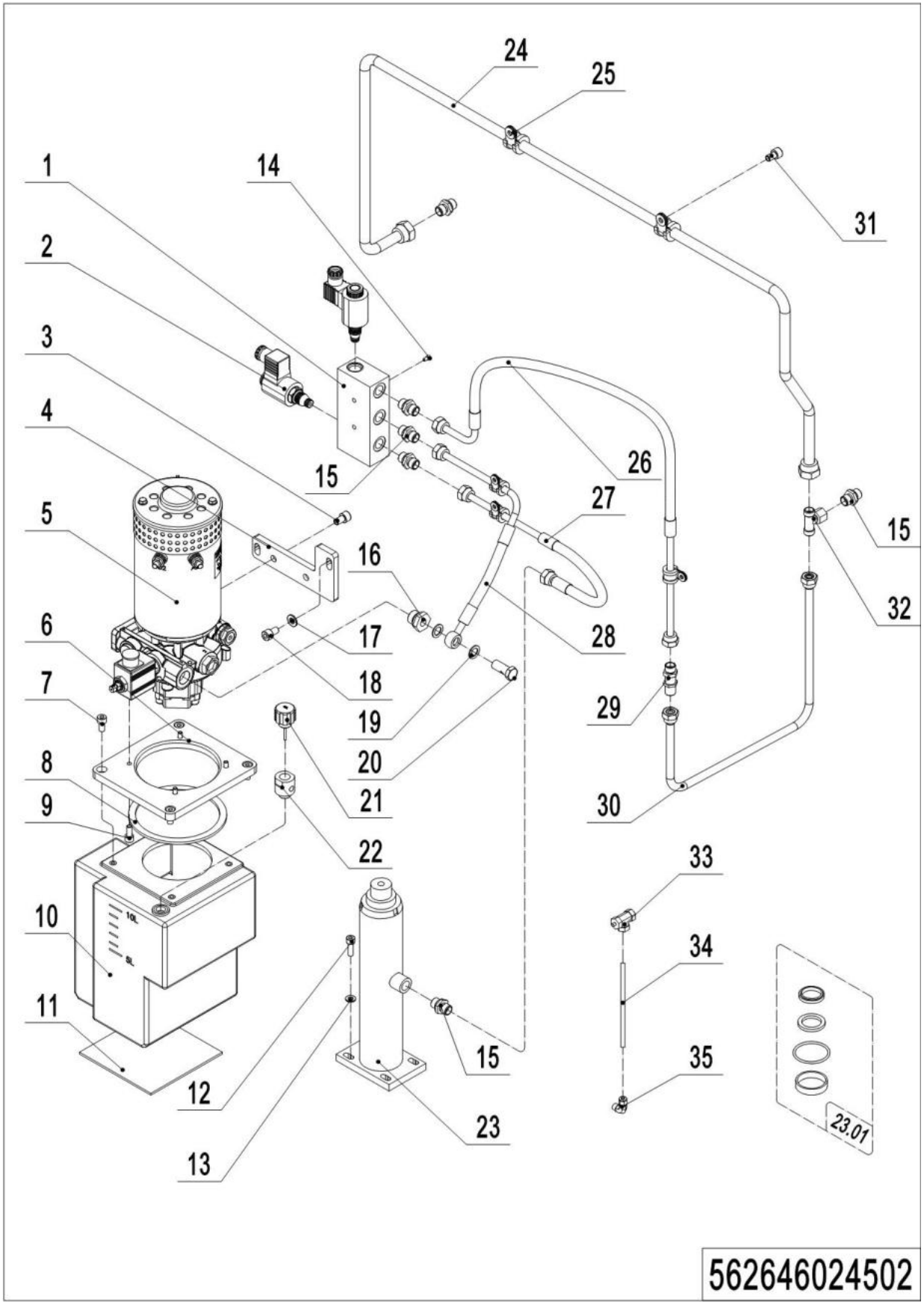

1= Supply as package. 2= Supply with constraints. 3= Phasing-out supply. 4= Supply as assembly. 5= Check other tables.

02 Hydraulic circuit (three-stage standard) (562646024502) Continuation

No.	Item Code	Mark	Item Description	Qty.	Substitute	Note
28	562624510001		Hose	1		
29	950400500001		Joint	1		
30	562624510003		Steel Tube	1		
31	910200200033	1	Screw	5		
32	950400900002		Joint	1		
33	950500200001		Joint	1		
34	535924020002		Pipe	1		
35	950500100001		Joint	3		

1= Supply as package. 2= Supply with constraints. 3= Phasing-out supply. 4= Supply as assembly. 5= Check other tables.

03 Hydraulic circuit (two-stage mast) (562646024503)

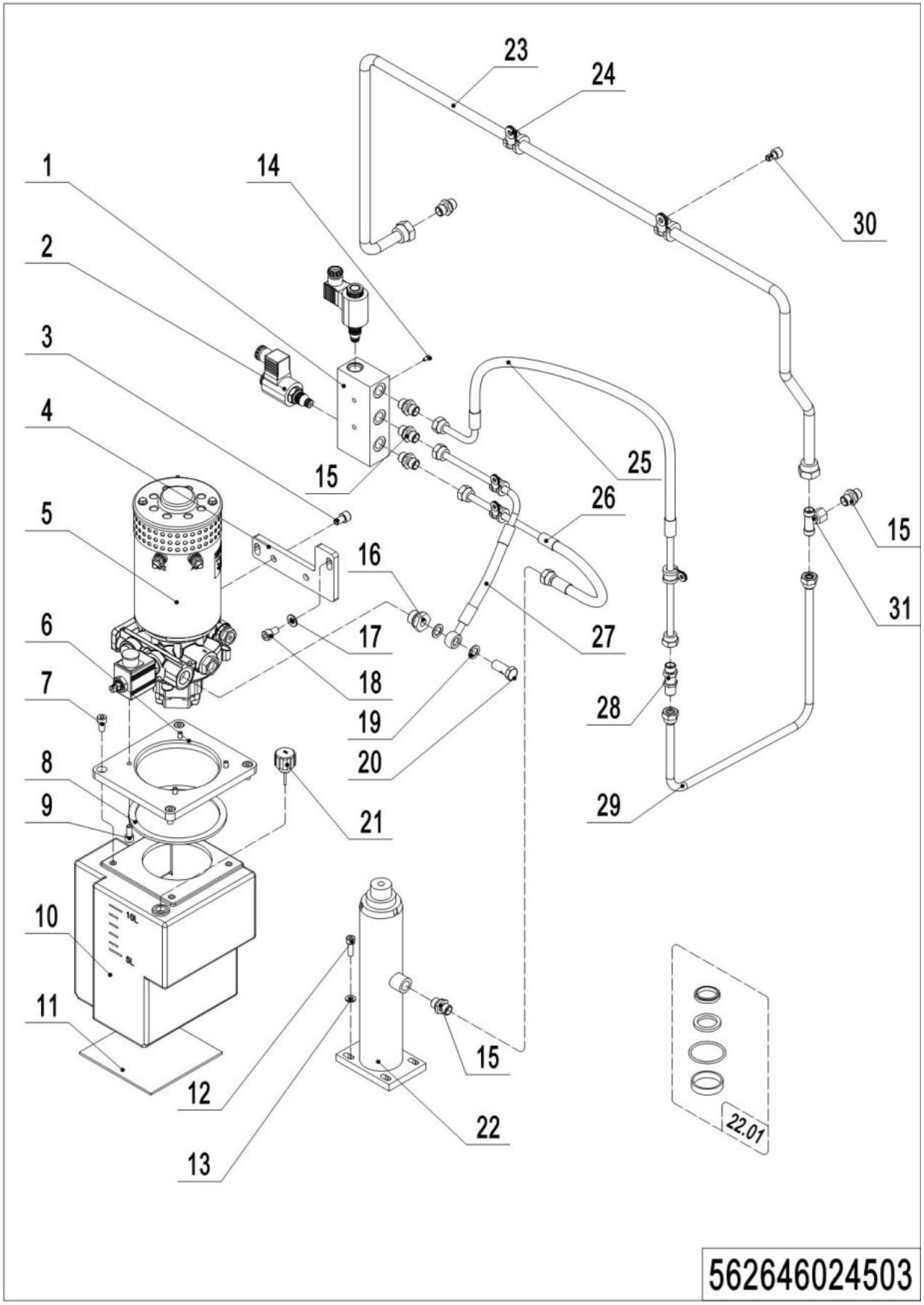

1= Supply as package. 2= Supply with constraints. 3= Phasing-out supply. 4= Supply as assembly. 5= Check other tables.

03 Hydraulic circuit (two-stage mast) (562646024503)

No.	Item Code	Mark	Item Description	Qty.	Substitute	Note
1	562624520000		Valve Block	1		
2	950700200003		Valve	1		
3	910200200074	1	Screw	2		
4	535924020001		Mounting Plate	1		
5	----------	5	Pump	1		**See 534746023501**
5	----------	5	Pump	1		**See 535946023502**
6	535919020005		Mounting Plate	1		
7	910200200057	1	Screw	4		
8	535919020003		Sealing Gasket	1		
9	910200200034	1	Screw	4		
10	562619010000		Tank	1		
11	531837020012		Crash Pad	1		
12	910200200059	1	Screw	4		
13	910400100006	1	Flat Washer	4		
14	910200200038	1	Screw	2		
15	950400400003		Joint	6		
16	950401200004		Joint	1		
17	910400100007	1	Flat Washer	2		
18	910200200076	1	Screw	2		
19	910800900003	1	Bonded Washer	2		
20	911300300001		Hinge Bolt	1		
21	951100200001		Screw Plug	1		
22	562624510000		Cylinder	1		
22.01	562698510001	1	Seal Kit	1		
23	535624010002		Steel Tube	1		
24	951000100001		Hose Clamp	5		
25	562624510002		Hose	1		
26	562624510004		Hose	1		
27	562624510001		Hose	1		

1= Supply as package. 2= Supply with constraints. 3= Phasing-out supply. 4= Supply as assembly. 5= Check other tables.

03 Hydraulic circuit (two-stage mast) (562646024503) Continuation

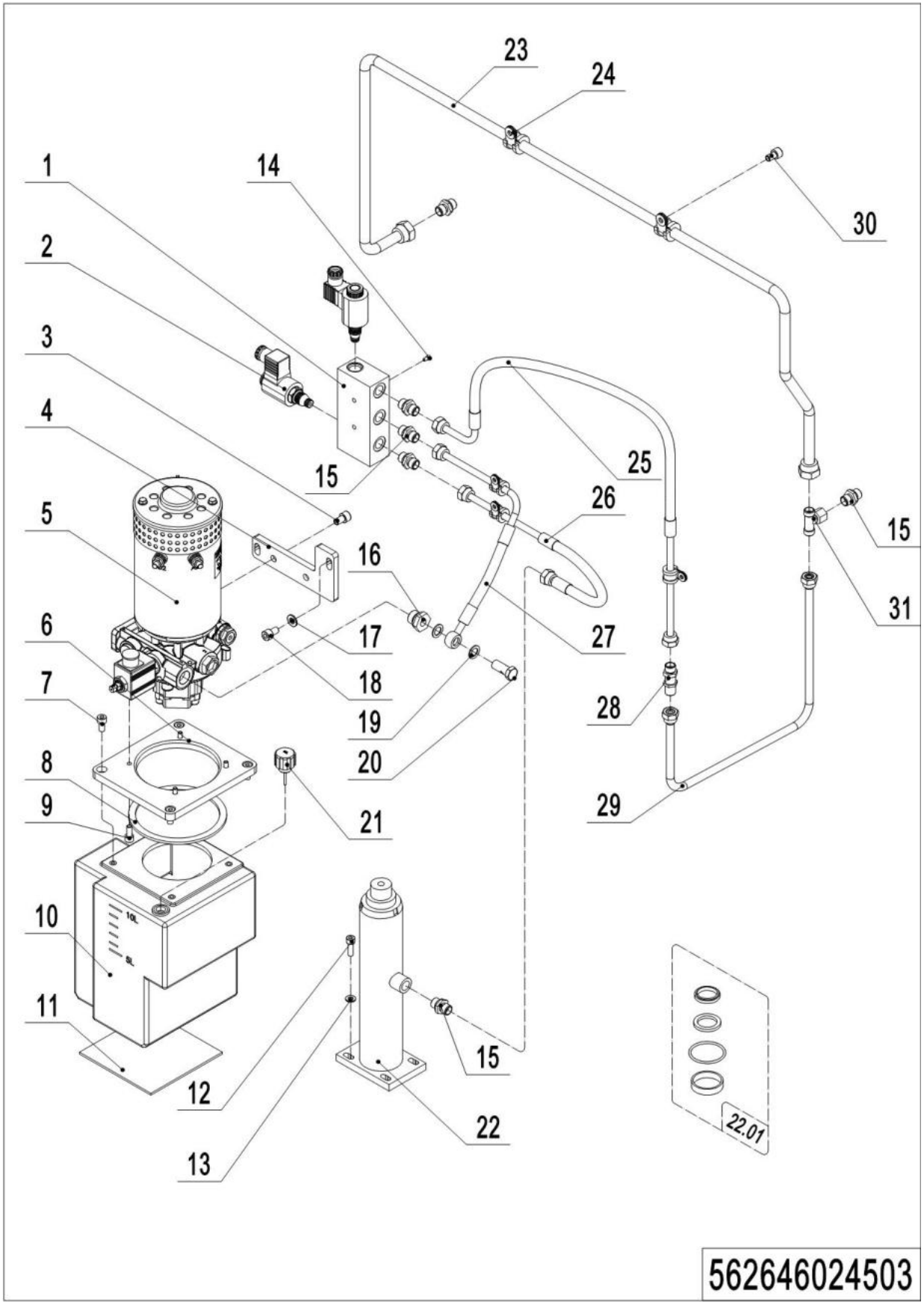

1= Supply as package. 2= Supply with constraints. 3= Phasing-out supply. 4= Supply as assembly. 5= Check other tables.

03 Hydraulic circuit (two-stage mast) (562646024503) Continuation

No.	Item Code	Mark	Item Description	Qty.	Substitute	Note
28	950400500001		Joint	1		
29	562624510005		Steel Tube	1		
30	910200200033	1	Screw	5		
31	950400900002		Joint	1		

1= Supply as package. 2= Supply with constraints. 3= Phasing-out supply. 4= Supply as assembly. 5= Check other tables.

04 Pump unit (HPI, 3.2KW) (534746023501)

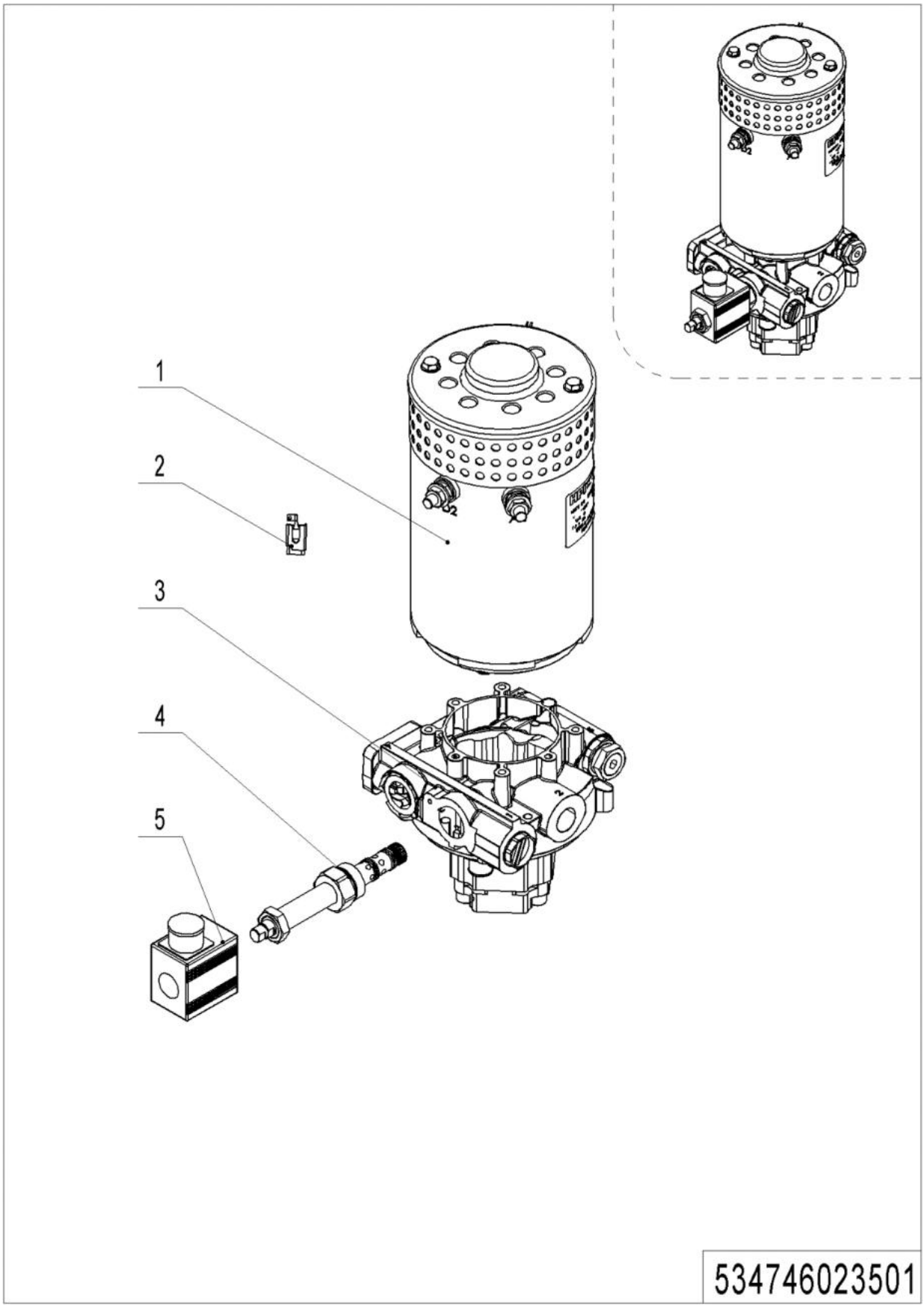

1= Supply as package. 2= Supply with constraints. 3= Phasing-out supply. 4= Supply as assembly. 5= Check other tables.

04 Pump unit (HPI, 3.2KW) (534746023501)

No.	Item Code	Mark	Item Description	Qty.	Substitute	Note
--	950900100015		Pump Unit	1		HPI,3.2KW
1	534798510006	2	Motor	1		
2	534798520026	2	Carbon Brush	1		
3	534798510007	2	Valve Block	1		
4	534798520024	2	Magnetic Valve	1		Provide with coil
5	534798520025	2	Coil	1		Provide with valve

1= Supply as package. 2= Supply with constraints. 3= Phasing-out supply. 4= Supply as assembly. 5= Check other tables.

05 Pump unit (VIBO, 3.2KW) (534746023502)

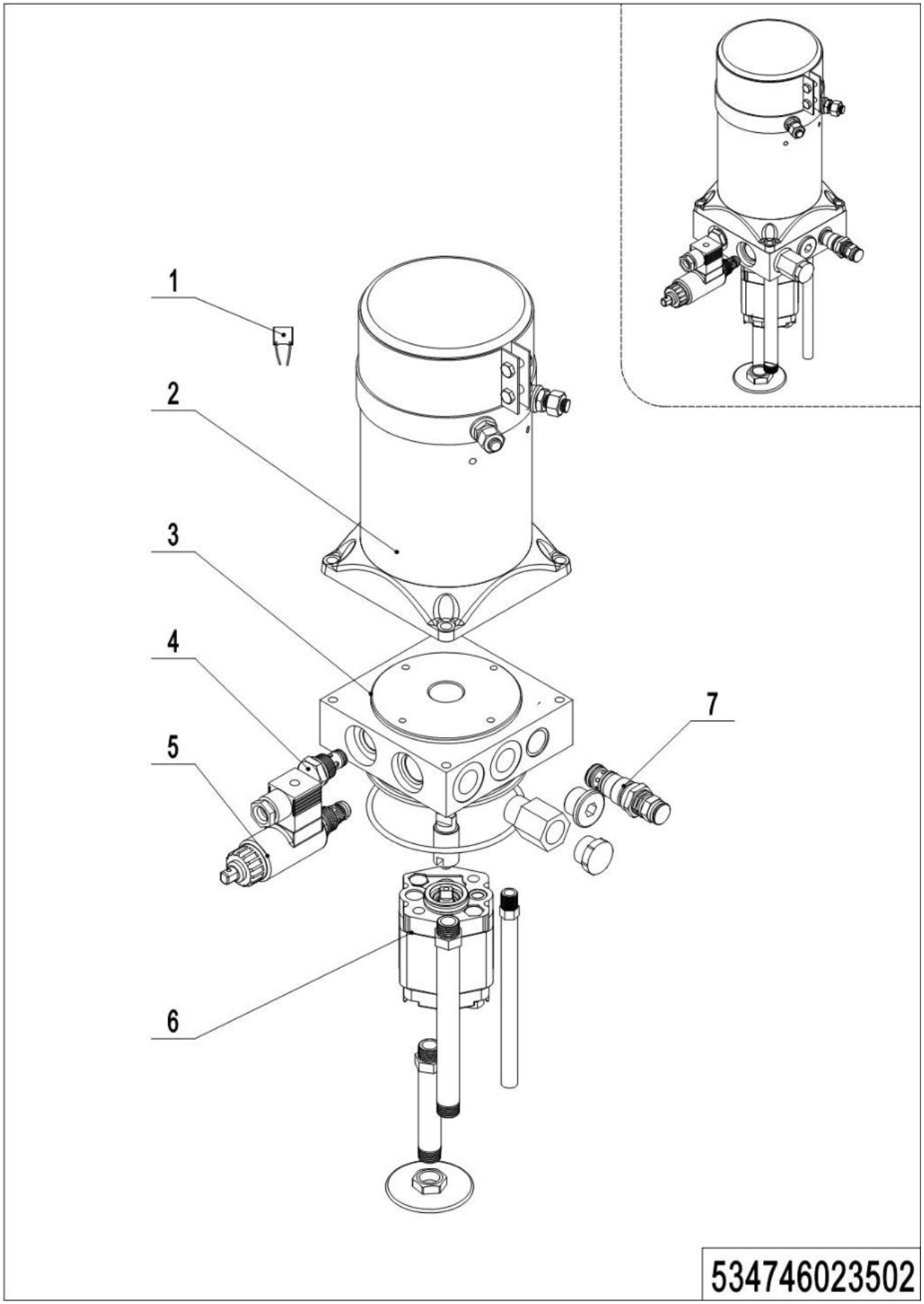

1= Supply as package. 2= Supply with constraints. 3= Phasing-out supply. 4= Supply as assembly. 5= Check other tables.

05 Pump unit (VIBO, 3.2KW) (534746023502)

No.	Item Code	Mark	Item Description	Qty.	Substitute	Note
--	950900100098		Pump Unite	1		VIBO,3.2KW
1	535998510013	2	Carbon Brush	1		
2	534798510012	2	Motor	1		
3	534798510013	2	Valve Block	1		
4	532098510003	2	Check Valve	1		
5	534798510014	2	Magnetic Valve	1		
6	534798510015	2	Gear Pump	1		
7	402698520018	2	Overflow Valve	1		

1= Supply as package. 2= Supply with constraints. 3= Phasing-out supply. 4= Supply as assembly. 5= Check other tables.

Chapter 3: Truck Structure

01 Chassis (562646021501)

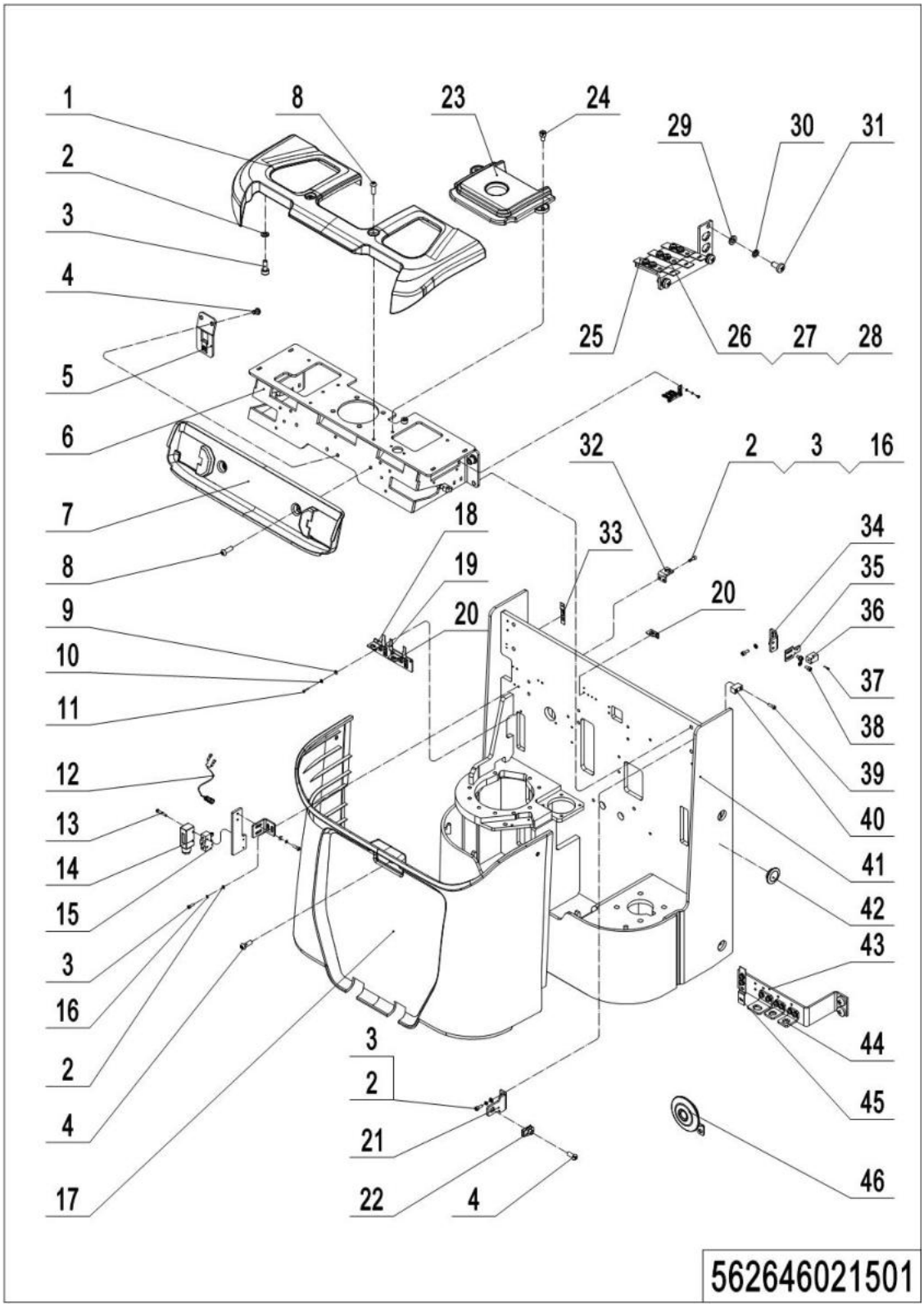

01 Chassis (562646021501)

No.	Item Code	Mar	Item Description	Qty.	Substitute	Note
1	535921520040		Protective Cover	1		
2	910400100005	1	Flat Washer	20		
3	910200200035	1	Screw	18		
4	941100100004	1	Screw	5		
5	535921520032		Mounting Plate	1		
6	535917510000		Mounting Base	1		
7	535921520041		Protective Cover	1		
8	941100100005	1	Screw	4		
9	910400100005	1	Flat Washer	2		
10	910400500005	1	Spring Washer	2		
11	910200500052	1	Screw	2		
12	562633010002		Wire Harness	1		
13	910200500027	1	Screw	2		
14	920200300007		Protective Cover	1		
15	920200300001		Microswitch	1		
16	910400500005	1	Spring Washer	20		
17	535921520039		Protective Cover	1		
18	535921520027		Mounting Plate	1		
19	921300300010		Connector Holder	3		
19	921300300003		Holder	5		
20	921300300003		Holder	5		**Manual steering**
21	535921520031		Mounting Plate	2		
22	940400400003	1	Cage Nut	3		
23	535921520042		Protective Cover	1		
24	910200200074	1	Screw	2		
25	921300300005		Holder	4		
26	910200500020	1	Screw	14		
27	910400100003	1	Flat Washer	14		
28	910400500003	1	Spring Washer	14		
29	910400100005	1	Flat Washer	2		

1= Supply as package. 2= Supply with constraints. 3= Phasing-out supply. 4= Supply as assembly. 5= Check other tables.

01 Chassis (562646021501) Continuation

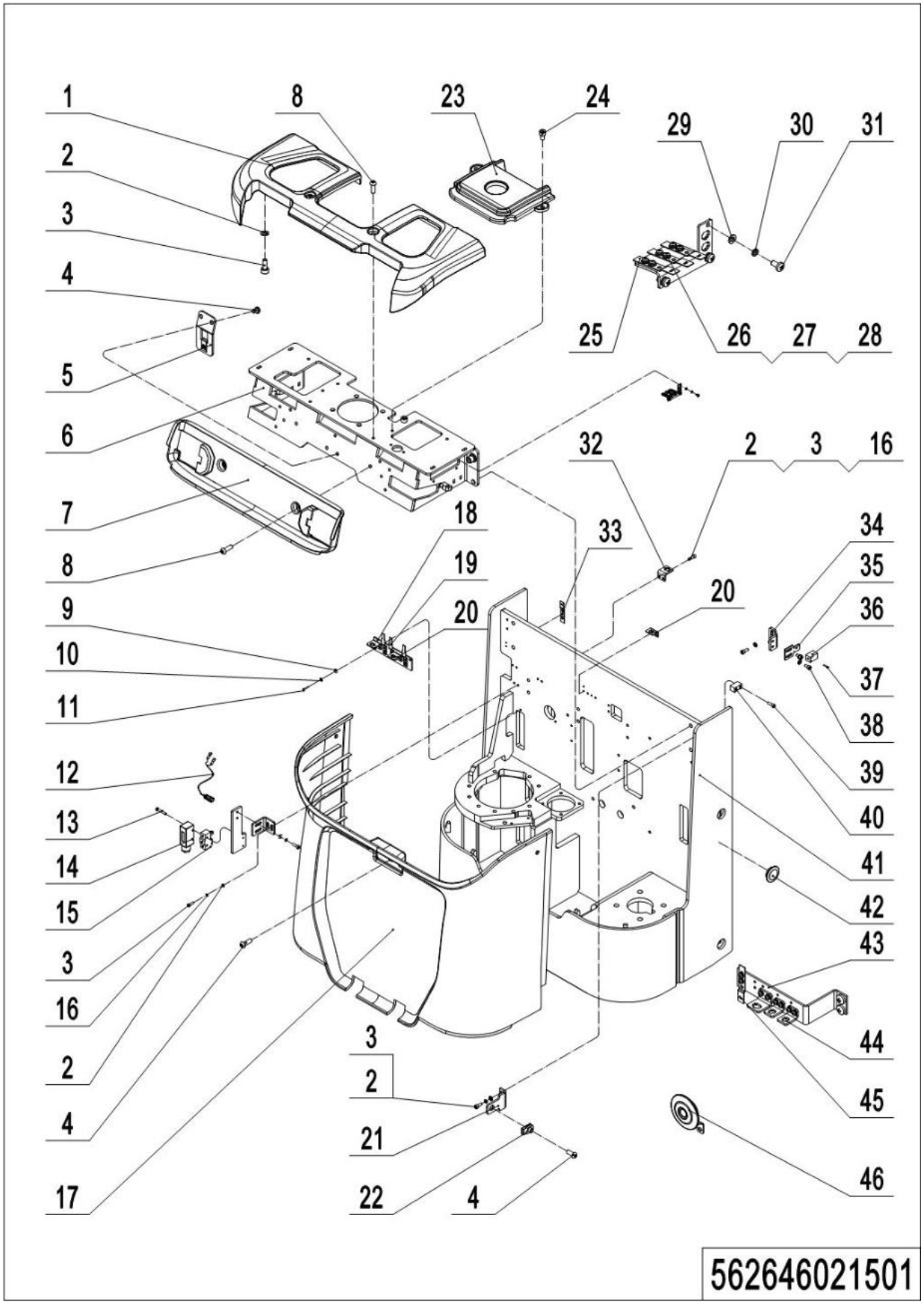

01 Chassis (562646021501) Continuation

No.	Item Code	Mar	Item Description	Qty.	Substitute	Note
30	910400500005	1	Spring Washer	2		
31	910200500052	1	Screw	2		
32	562621520024		Mounting Plate	1		
33	921300300005		Holder	2		
34	562621520025		Mounting Plate	1		
35	562621520028		Mounting Plate	1		
36	561733510000		Proximity Switch	1		
37	910200500015	1	Screw	2		
38	910200200033	1	Screw	2		
39	910200200057	1	Screw	4		
40	562621520027		Stop Plate	2		
41	562621510001	2	Chassis(570)	1		
41	562621510002	2	Chassis(685)	1		
41	562621510003	2	Chassis(570)	1		EPS
41	562621510004	2	Chassis(685)	1		EPS
42	253522020024		Close Plate	4		
43	535921520026		Mounting Plate	1		
44	921300300002		Holder	2		
45	921300300005		Holder	1		
46	920500100001		Horn	1		

1= Supply as package. 2= Supply with constraints. 3= Phasing-out supply. 4= Supply as assembly. 5= Check other tables.

02 Fork frame (562646038501)

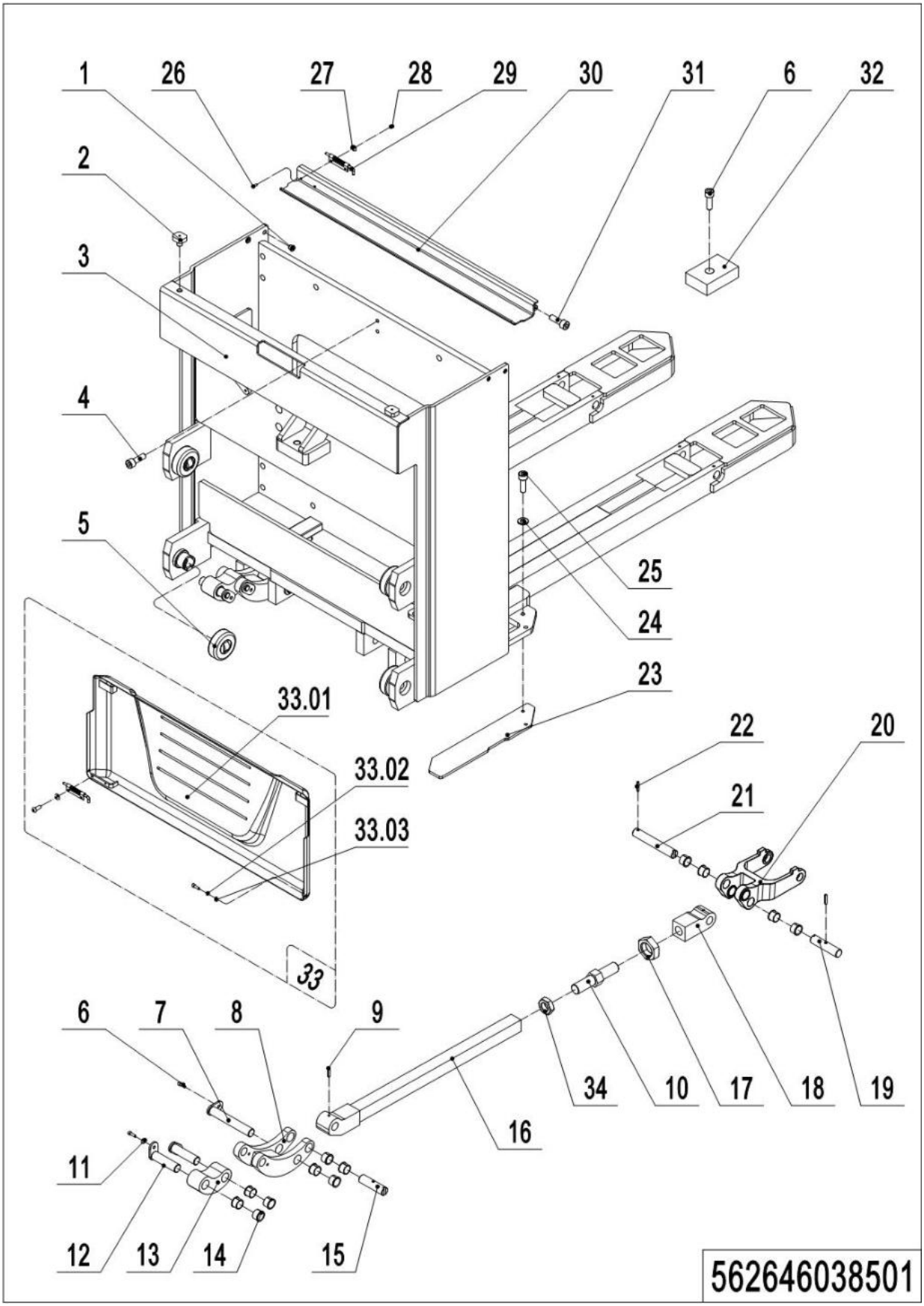

1= Supply as package. 2= Supply with constraints. 3= Phasing-out supply. 4= Supply as assembly. 5= Check other tables.

02 Fork frame (562646038501)

No.	Item Code	Mar	Item Description	Qty.	Substitute	Note
1	534721520023	1	Sleeve	4		
2	505938520016		Crash Pad	2		
3	562638510001	2	Fork Carriage(570x1150)	1		
3	562638510002	2	Fork Carriage(685x1150)	1		
4	910200200073	1	Screw	1		
5	940200300001		Compound Roller	4		
6	910200200035	1	Screw	8		
7	562038510003		Pin	2		
8	562038510004		Plate	2		
9	910600400028	1	Spring Pin	4		
10	562638520025		Adjusting Rod	2		
11	910400100005	1	Flat Washer	6		
12	562038510005		Pin	4		
13	562038520029		Oscillating Bar	2		
14	940500200007	1	Bushing	24		
15	562038520028		Axle	2		
16	562638510012		Rod	2		
17	910300400011	1	Nut	2		
18	562638520033		Adjusting Sleeve	2		
19	562038520024		Axle	2		
20	562038520023		Riser	2		
21	562038520025		Axle	2		
22	910600400031	1	Spring Pin	2		
23	562638520022		Guard Plate	1		
24	910400100006	1	Flat Washer	3		
25	910200200057	1	Screw	3		
26	910200300006	1	Screw	2		
27	910400100003	1	Flat Washer	4		
28	910300100003	1	Nut	2		

1= Supply as package. 2= Supply with constraints. 3= Phasing-out supply. 4= Supply as assembly. 5= Check other tables.

02 Fork frame (562646038501) Continuation

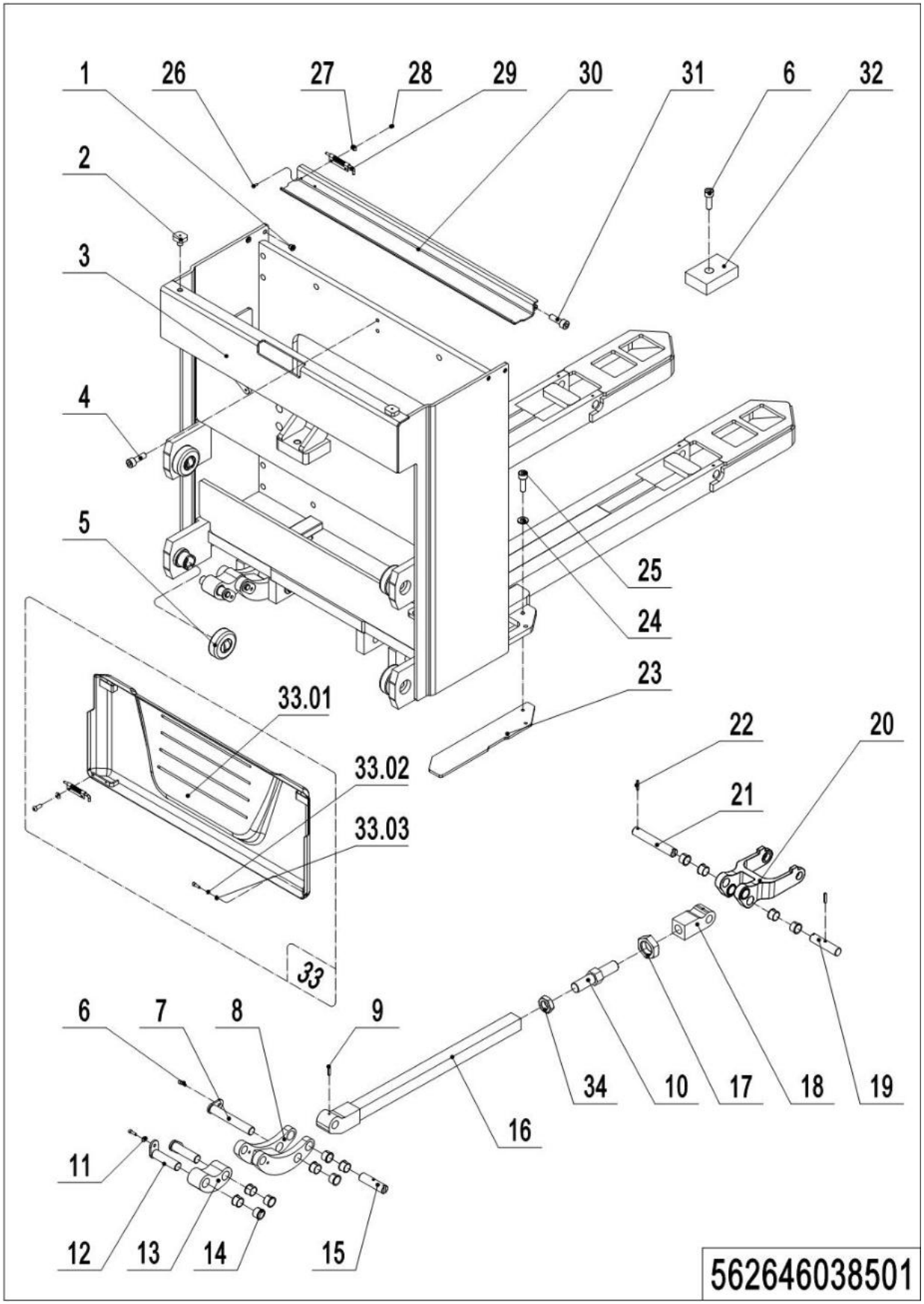

1= Supply as package. 2= Supply with constraints. 3= Phasing-out supply. 4= Supply as assembly. 5= Check other tables.

02 Fork frame (562646038501) Continuation

No.	Item Code	Mar	Item Description	Qty.	Substitute	Note
29	940800900001		Lock Pin	2		
30	562638510010		Close Plate	1		
31	910200200024	1	Screw	2		
32	534721520024		Crash Pad	2		
33	562621010001		Cell Cover Assembly	1		
33.01	562621010002		Cell Cover	1		
33.02	910400500004	1	Spring Washer	1		
33.03	910400100004	1	Flat Washer	1		
34	910300400015	1	Nut	2		left-handed

1= Supply as package. 2= Supply with constraints. 3= Phasing-out supply. 4= Supply as assembly. 5= Check other tables.

03 Protective arm (535946017501)

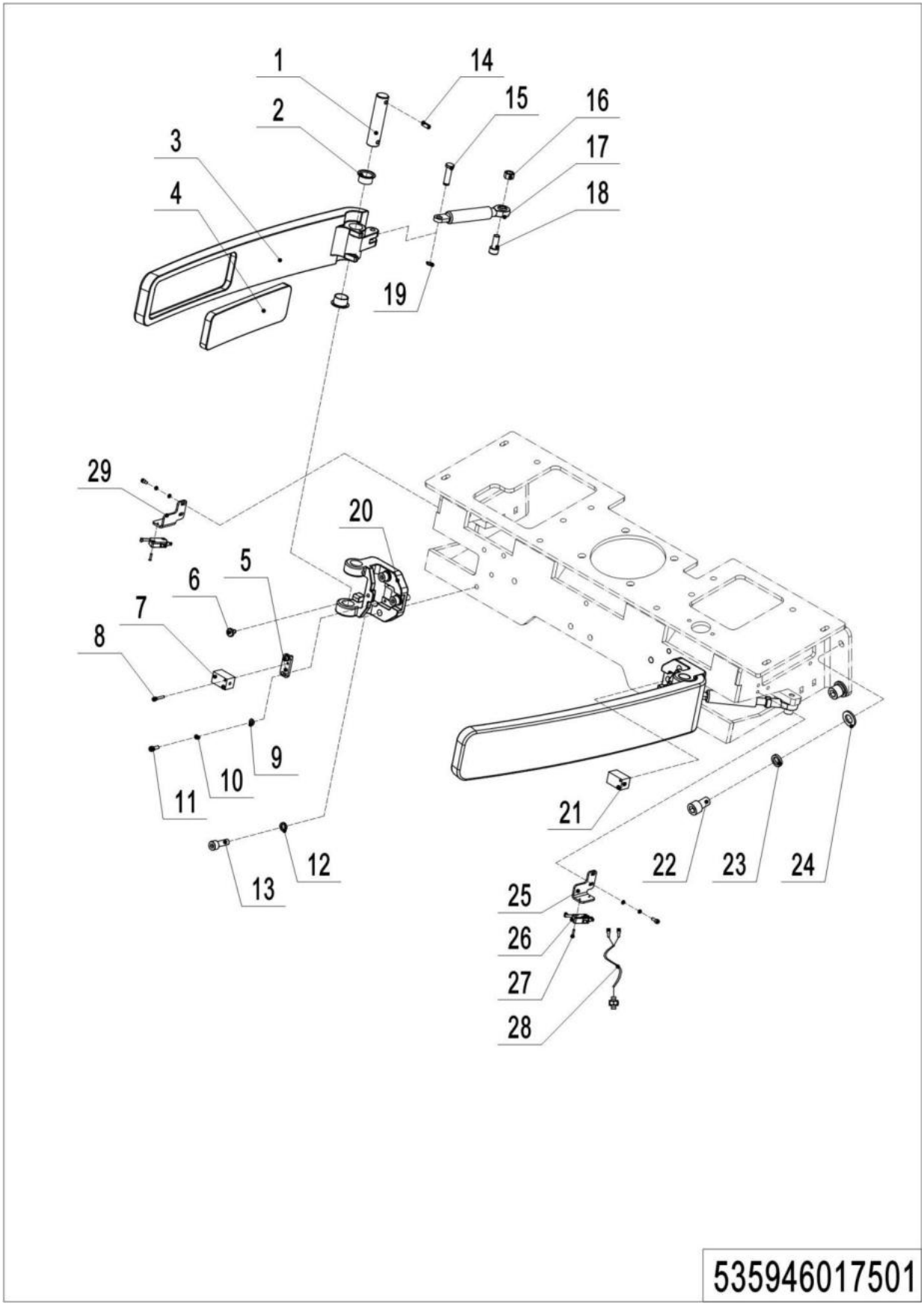

1= Supply as package. 2= Supply with constraints. 3= Phasing-out supply. 4= Supply as assembly. 5= Check other tables.

03 Protective arm (535946017501)

No.	Item Code	Mar	Item Description	Qty.	Substitute	Note
1	535917520007		Axle	2		
2	940500200003		Bushing	2		
3	535917520008		Protective Arm	2		
4	535917520009		Protective Mat	2		
5	535917520011		Mounting Plate	2		
6	535917520012		Protective Mat	2		
7	535933510001		Proximity Switch	1		
8	910200500015	1	Screw	4		
9	910400100003	1	Flat Washer	8		
10	910400500003	1	Spring Washer	8		
11	910200200014	1	Screw	8		
12	910400500006	1	Spring Washer	6		
13	910200200058	1	Screw	6		
14	910600400025	1	Spring Pin	2		
15	535917520010		Axle	2		
16	910300100006	1	Nut	2		
17	940400100037		Air Spring	2		
18	910200200060	1	Screw	2		
19	910401300001	1	Circlip	2		
20	535917520006		Mounting Base	2		
21	535933510000		Proximity Switch	1		
22	910200200096	1	Screw	4		
23	910400500008	1	Spring Washer	4		
24	910400100008	1	Flat Washer	4		
25	535917520013		Mounting Plate	1		
26	920200300016		Microswitch	2		
27	506733010025		Wire Harness	2		
28	910200500014		Screw	4		
29	535917520014		Mounting Plate	2		

1= Supply as package. 2= Supply with constraints. 3= Phasing-out supply. 4= Supply as assembly. 5= Check other tables.

04 Pedal (535946018002)

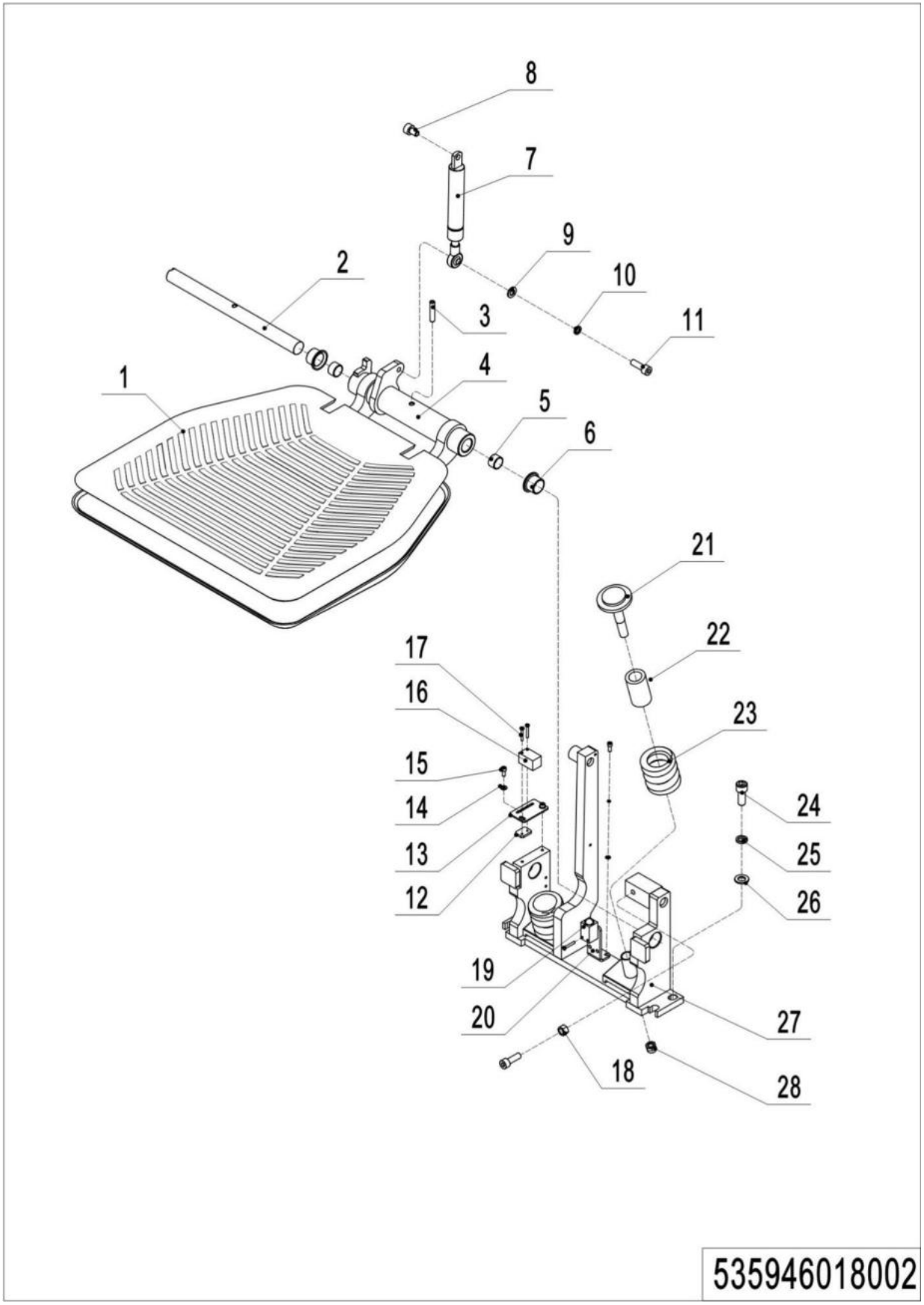

1= Supply as package. 2= Supply with constraints. 3= Phasing-out supply. 4= Supply as assembly. 5= Check other tables.

04 Pedal (535946018002)

No.	Item Code	Mark	Item Description	Qty.	Substitute	Note
1	535918020019		Pedal Pad	1		
2	535918020014		Axle	1		
3	910600400040	1	Spring Pin	1		
4	562618010001		Platform	1		
5	940500100019		Bushing	2		
6	940500200008		Bushing	2		
7	940400100057		Air Spring	1		
8	910200200057	1	Screw	1		
9	910400100006	1	Flat Washer	1		
10	910400500006	1	Spring Washer	1		
11	910200200058	1	Screw	2		
12	535918020027		Mounting Plate	1		
13	562618020005		Mounting Plate	1		
14	910400100003	1	Flat Washer	2		
15	910200200013	1	Screw	2		
16	535933510002		Proximity Switch	1		
17	910200500015	1	Screw	2		
18	910300100007	1	Nut	1		
19	506733510005		Proximity Switch	1		
20	535918020022		Mounting Plate	1		
21	535918020017		Bolt	2		
22	535918020018		Cushion Collar	2		
23	535918020016		Spring	2		
24	910200200076	1	Screw	4		
25	910400500007	1	Spring Washer	4		
26	910400100007	1	Flat Washer	4		
27	562618010000		Mounting Base	1		
28	910300500006	1	Nut	2		

1= Supply as package. 2= Supply with constraints. 3= Phasing-out supply. 4= Supply as assembly. 5= Check other tables.

05 Fork Carriage (562046038001)

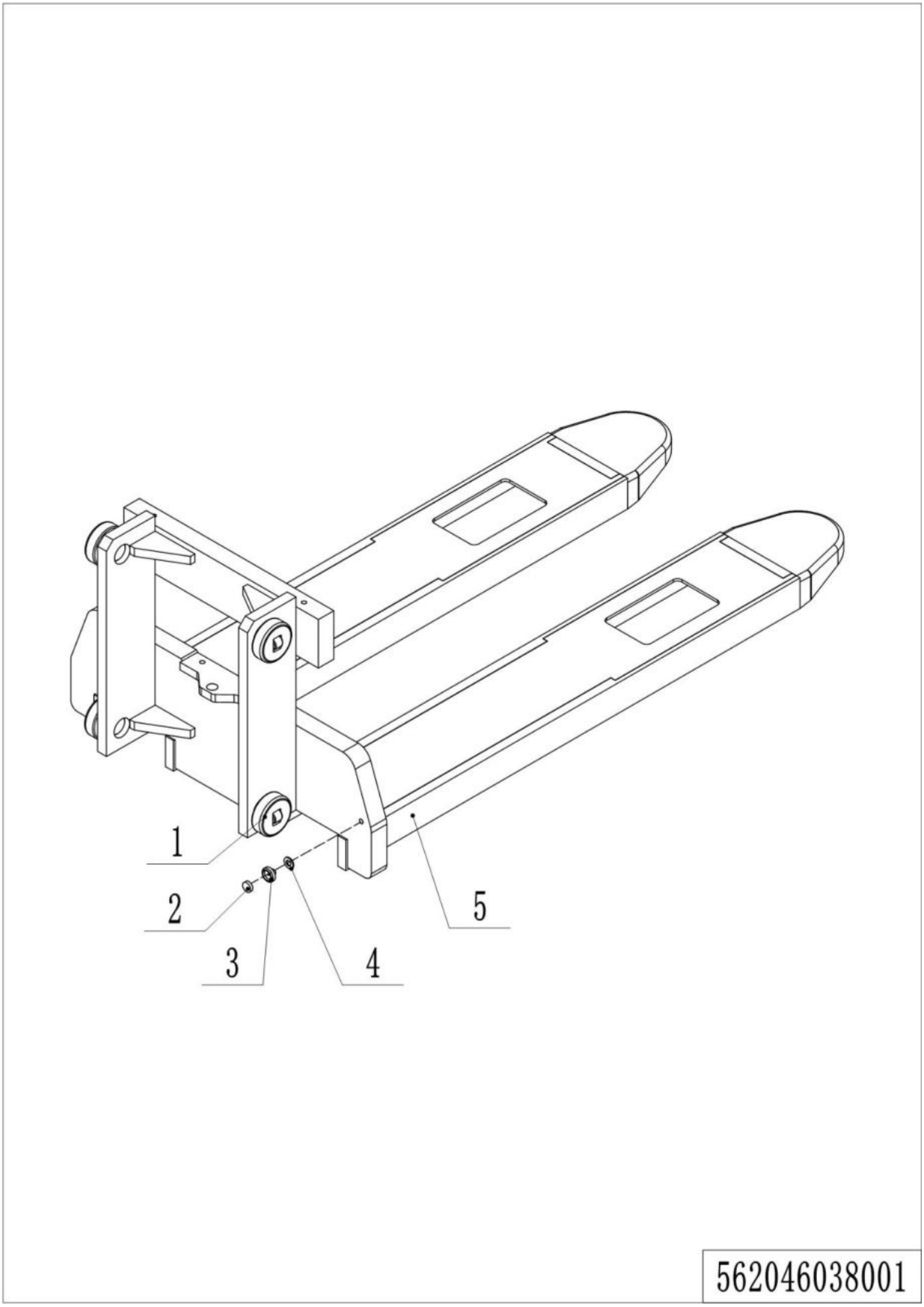

1= Supply as package. 2= Supply with constraints. 3= Phasing-out supply. 4= Supply as assembly. 5= Check other tables.

05 Fork Carriage (562046038001)

No.	Item Code	Mar	Item Description	Qty.	Substitute	Note
1	940200300008		Compound Roller	4		
2	940600100001		Magnetic Steel	1		
3	940600200001		Mounting Base	1		
4	910400100007	1	Flat Washer	1		
5	562038010001	2	Fork(570x1150)	1		DX
5	562038010002	2	Fork(685x1150)	1		DX
5	562038010003	2	Fork(570x1150)	1		DX+FFL
5	562038010004	2	Fork(685x1150)	1		DX+FFL
5	562038010005	2	Fork(570x1150)	1		TX
5	562038010006	2	Fork(685x1150)	1		TX
5	562038010007	2	Fork(570x1150)	1		TX+FFL
5	562038010008	2	Fork(685x1150)	1		TX+FFL

Chapter 4: Gantry System

01 Two-stage mast, standard (562646044001)

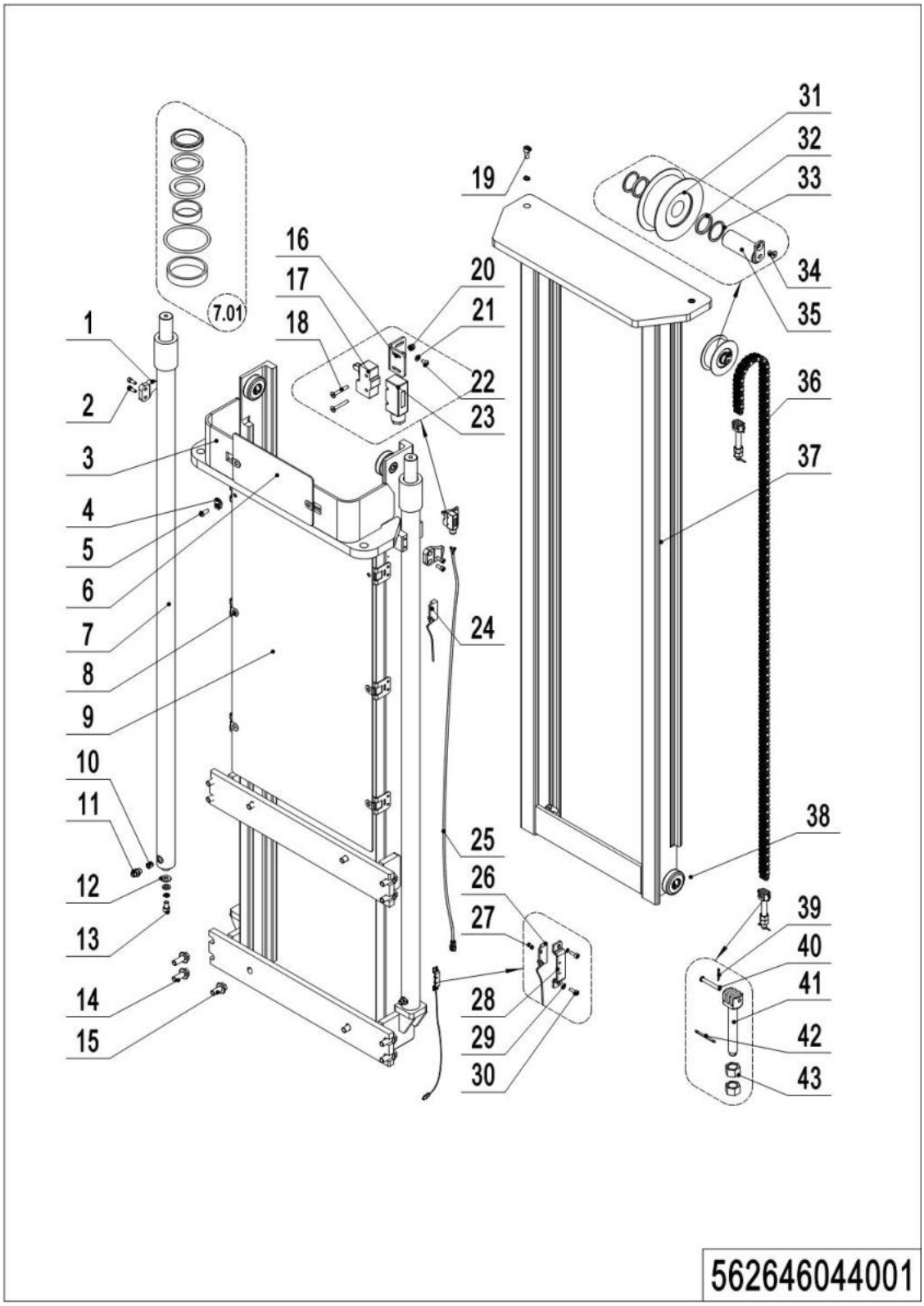

01 Two-stage mast, standard (562646044001)

No.	Item Code	Mark	Item Description	Qty.	Substitute	Note
1	275044020076		Fixing Plate	2		
2	910200200057	1	Screw	4		
3	534744010013	2	Outer Mast(2900)	1		
3	534744010012	2	Outer Mast(3200)	1		
3	534744010011	2	Outer Mast(3600)	1		
4	940400400003		Cage Nut	2		
5	941100100005	1	Screw	2		
6	534744520037		Guard Plate	1		
7	534744010008		Cylinder	2		2900
7	534744010007		Cylinder	2		3200
7	534744010006		Cylinder	2		3600
7.01	534798510005		Seal Kit	2		
8	940400300001		Spring Buckle	4		
8	940400300001		Spring Buckle	6		
9	534744020011		Guard Plate	1		2900
9	534744520038		Guard Plate	1		3200
9	534744020006		Guard Plate	1		3600
10	950600300001		Safety Valve	2		
11	950400400003		Joint	2		
12	534744520015		Subplate	2		
13	910200200096	1	Screw	2		
14	910100800006		Bolt	8		
15	910100800005		Bolt	4		
16	534744520036		Fixing Plate	1		
17	920200300001		Microswitch	1		
18	910200400007	1	Screw	2		
19	910200200097	1	Screw	2		
20	910300500001	1	Nut	2		
21	910400100003	1	Flat Washer	2		
22	910200300005	1	Screw	2		

1= Supply as package. 2= Supply with constraints. 3= Phasing-out supply. 4= Supply as assembly. 5= Check other tables.

01 Two-stage mast, standard (562646044001) Continuation

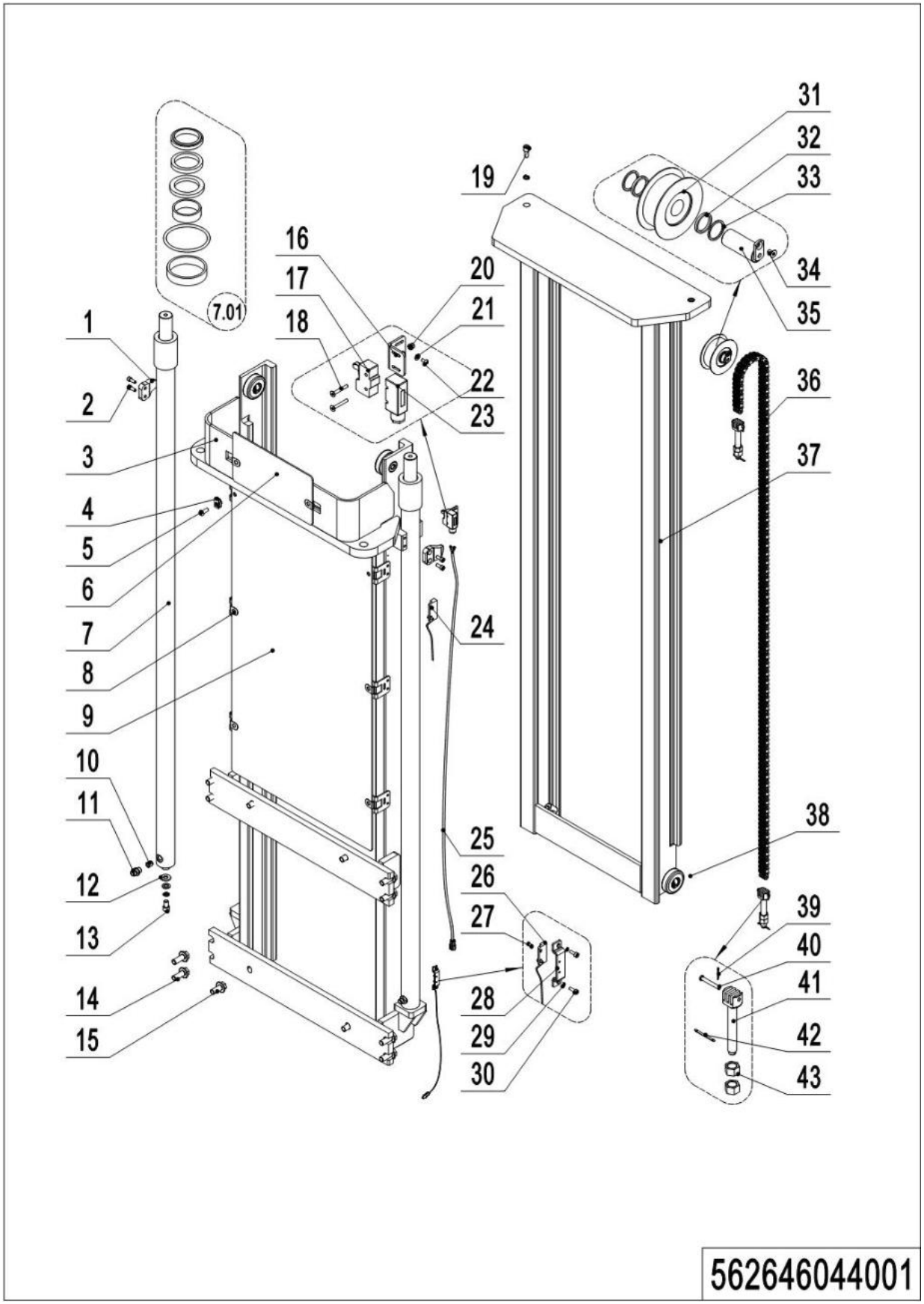

1= Supply as package. 2= Supply with constraints. 3= Phasing-out supply. 4= Supply as assembly. 5= Check other tables.

01 Two-stage mast, standard (562646044001) Continuation

No.	Item Code	Mark	Item Description	Qty.	Substitute	Note
23	920200300008		Protective Cover	1		
24	562633510003		Magnetic Switch	1		
25	562633010003		Wire Harness	1		
26	562633510002		Magnetic Switch	1		
27	910200500021	1	Screw	4		
28	534744520080		Protective Cover	2		
29	910400500003	1	Spring Washer	4		
30	910200300006	1	Screw	4		
31	940200500010		Sprocket Bearing	1		
32	940600500009		Washer	2		
33	940600500008		Washer	2		
34	910200400016	1	Screw	1		
35	533544510006		Pin	1		
36	534744010010		Chain	1		2900
36	532944010015		Chain	1		3200
36	534744010009		Chain	1		3600
37	534744010016	2	Inner Mast(2900)	1		
37	534744010015	2	Inner Mast(3200)	1		
37	534744010014	2	Inner Mast(3600)	1		
38	940200300004		Compound Roller	4		
39	910600600006	1	Cotter Pin	2		
40	941100800012		Pin	2		
41	532644520038		Chain Anchor	2		
42	910600600023	1	Cotter Pin	2		
43	910300200008	1	Nut	4		

1= Supply as package. 2= Supply with constraints. 3= Phasing-out supply. 4= Supply as assembly. 5= Check other tables.

02 Two-stage mast, FFL (562646043501)

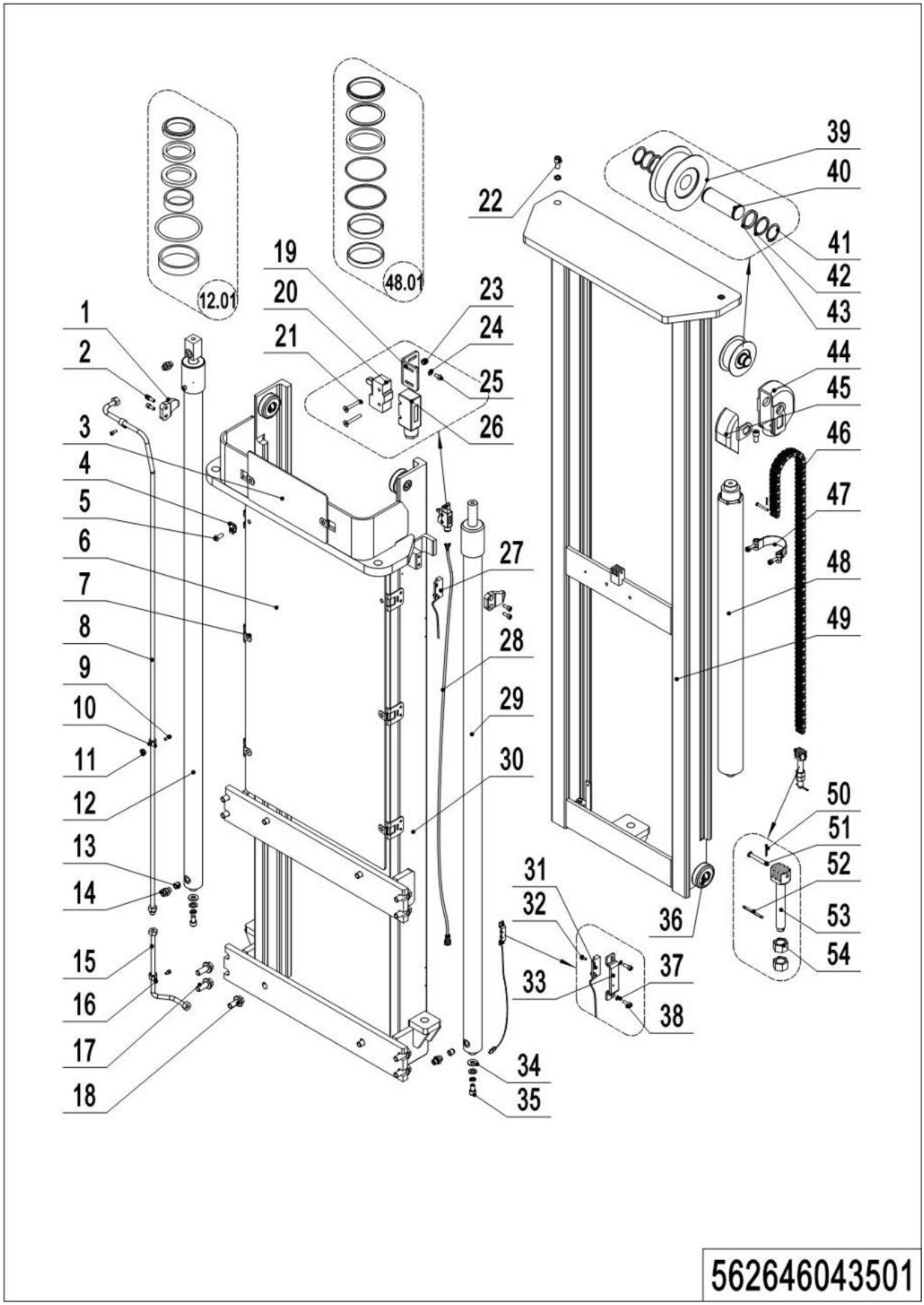

1= Supply as package. 2= Supply with constraints. 3= Phasing-out supply. 4= Supply as assembly. 5= Check other tables.

02 Two-stage mast, FFL (562646043501)

No.	Item Code	Mark	Item Description	Qty.	Substitute	Note
1	275044020076		Fixing Plate	2		
2	910200200057	1	Screw	4		
3	534744520037		Guard Plate	1		
4	940400400003		Cage Nut	2		
5	941100100005	1	Screw	2		
6	534744020011		Guard Plate	1		2900
6	534744520038		Guard Plate	1		3200
6	534744020006		Guard Plate	1		3600
7	940400300001		Spring Buckle	4		
7	940400300001		Spring Buckle	6		
8	534743510017		Steel Tube	1		2900
8	534743510016		Steel Tube	1		3200
8	534743510015		Steel Tube	1		3600
9	910200200035		Screw	2		
10	951000100001		Hose Clamp	2		
11	940600500001		Washer	2		
12	534743510008		Cylinder	1		2900
12	534743510007		Cylinder	1		3200
12	534743510006		Cylinder	1		3600
12.01	534798510002		Seal Kit	2		**Also for cylinder29**
13	950600300001		Safety Valve	3		
14	950400400003		Joint	4		
15	534743510018		Steel Tube	1		
16	951000100003		Hose Clamp	1		
17	910100800006		Bolt	8		
18	910100800005		Bolt	4		
19	534744520036		Fixing Plate	1		
20	920200300001		Microswitch	1		
21	910200400007	1	Screw	2		
22	910200200097	1	Screw	3		

1= Supply as package. 2= Supply with constraints. 3= Phasing-out supply. 4= Supply as assembly. 5= Check other tables.

02 Two-stage mast, FFL (562646043501) Continuation 1

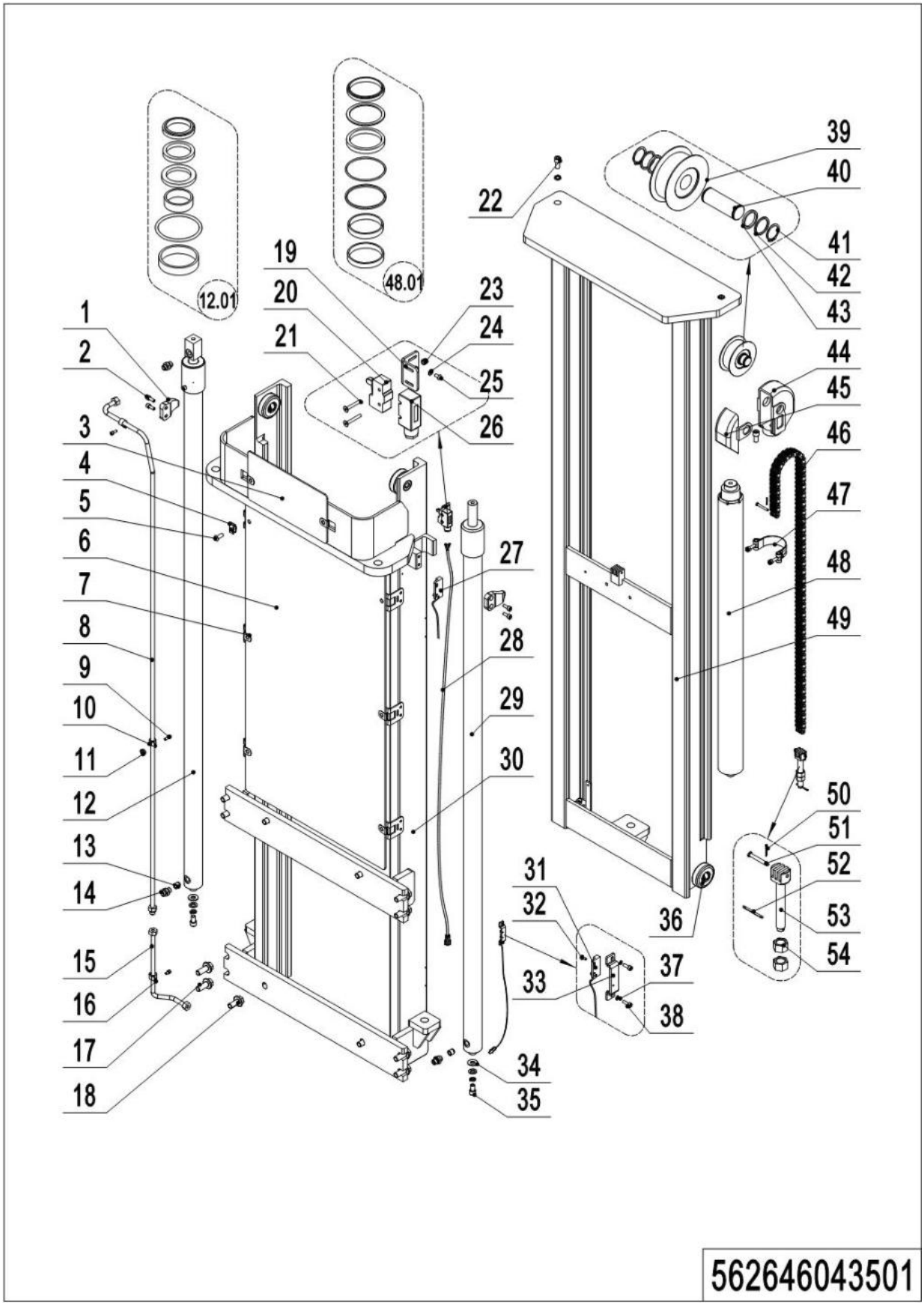

02 Two-stage mast, FFL (562646043501) Continuation 1

No.	Item Code	Mark	Item Description	Qty.	Substitute	Note
23	910300500001	1	Nut	2		
24	910400100003	1	Flat Washer	2		
25	910200300005	1	Screw	2		
26	920200300008		Protective Cover	1		
27	562633510003		Magnetic Switch	1		
28	562633010003		Wire Harness	1		
29	534743510014		Cylinder	1		2900
29	534743510013		Cylinder	1		3200
29	534743510012		Cylinder	1		3600
30	534743510022	2	Outer Mast(2900)	1		
30	534743510021	2	Outer Mast(3200)	1		
30	534743510020	2	Outer Mast(3600)	1		
31	562633510002		Magnetic Switch	1		
32	910200500021	1	Screw	4		
33	534744520080		Protective Cover	2		
34	534744520015		Subplate	2		
35	910200200096	1	Screw	2		
36	940200300004		Compound Roller	4		
37	910400500003	1	Spring Washer	4		
38	910200300006	1	Screw	4		
39	940200500010		Sprocket Bearing	1		
40	532644520037		Axle	1		
41	910401300016		Circlip	2		
42	940600500008	1	Washer	2		
43	940600500009		Washer	2		
44	532644520035		Yoke	1		
45	532644520036		Side Cover	1		
46	532644510077		Chain	1		2900
46	532644510083		Chain	1		3200

02 Two-stage mast, FFL (562646043501) Continuation 2

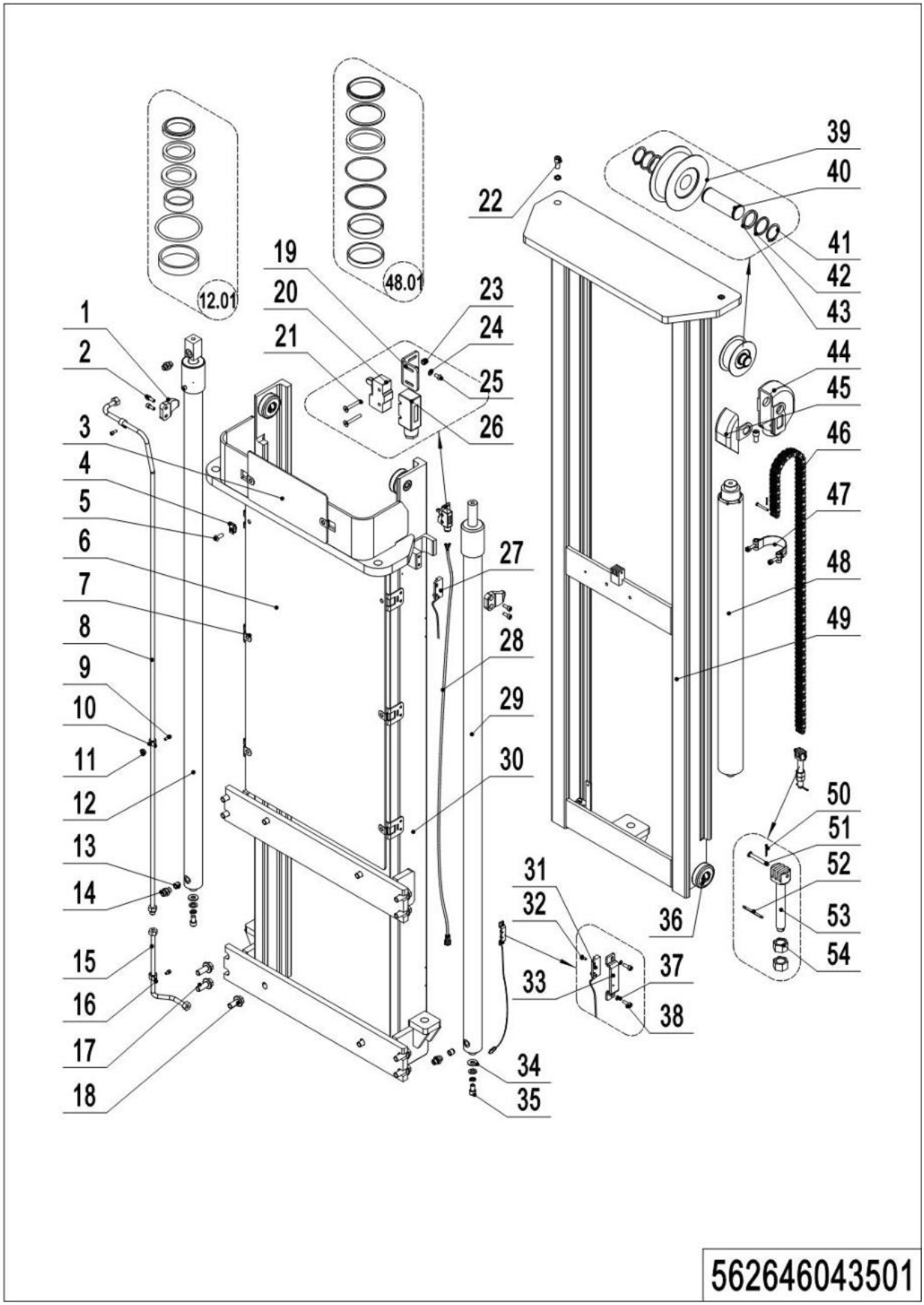

1= Supply as package. 2= Supply with constraints. 3= Phasing-out supply. 4= Supply as assembly. 5= Check other tables.

02 Two-stage mast, FFL (562646043501) Continuation 2

No.	Item Code	Mark	Item Description	Qty.	Substitute	Note
46	532644510073		Chain	1		**3600**
47	940800600002		Hoop	1		
48	534743510011		Cylinder	1		**2900**
48	534743510010		Cylinder	1		**3200**
48	534743510009		Cylinder	1		**3600**
48.01	534798510003		Seal Kit	1		
49	534743510025	2	Inner Mast(2900)	1		
49	534743510024	2	Inner Mast(3200)	1		
49	534743510023	2	Inner Mast(3600)	1		
50	910600600006	1	Cotter Pin	2		
51	941100800012		Pin	2		
52	910600600023	1	Cotter Pin	1		
53	532644520038		Chain Anchor	1		
54	910300200008	1	Nut	2		

03 Three-stage mast, standard (562646045001)

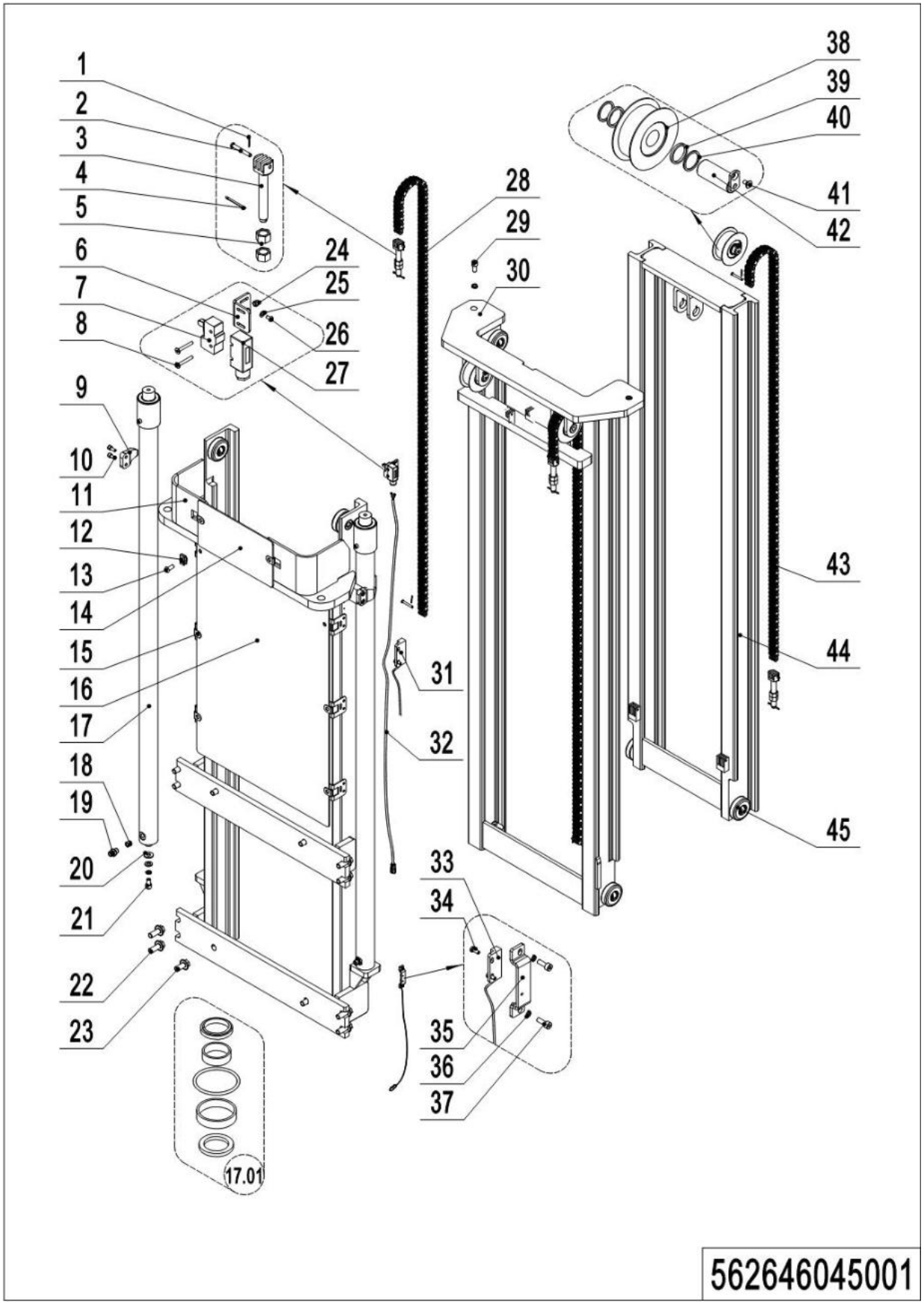

03 Three-stage mast, standard (562646045001)

No.	Item Code	Mark	Item Description	Qty.	Substitute	Note
1	910600600006	1	Cotter Pin	6		
2	941100800012		Pin	6		
3	532644520038		Chain Anchor	3		
4	910600600023		Cotter Pin	3		
5	910300200008	1	Nut	6		
6	534744520036		Fixing Plate	1		
7	920200300001		Microswitch	1		
8	910200400007	1	Screw	2		
9	275044020076		Fixing Plate	2		
10	910200200057	1	Screw	4		
11	534745010012	2	Outer Mast(4300)	1		
11	534745010010	2	Outer Mast(4600)	1		
12	940400400003		Cage Nut	2		
13	941100100005	1	Screw	2		
14	534744520037		Guard Plate	1		
15	940400300001		Spring Buckle	6		
16	534744520039		Guard Plate	1		4300
16	534744520038		Guard Plate	1		4600
17	534745010007		Cylinder	2		4300
17	534745010006		Cylinder	2		4600
17.01	534798510004		Seal Kit	2		
18	950600300001		Safety Valve	2		
19	950400400003		Joint	2		
20	534744520015		Subplate	2		
21	910200200096	1	Screw	2		
22	910100800006		Bolt	8		
23	910100800005		Bolt	4		
24	910300500001	1	Nut	2		
25	910400100003	1	Flat Washer	2		

1= Supply as package. 2= Supply with constraints. 3= Phasing-out supply. 4= Supply as assembly. 5= Check other tables.

03 Three-stage mast, standard (562646045001) Continuation

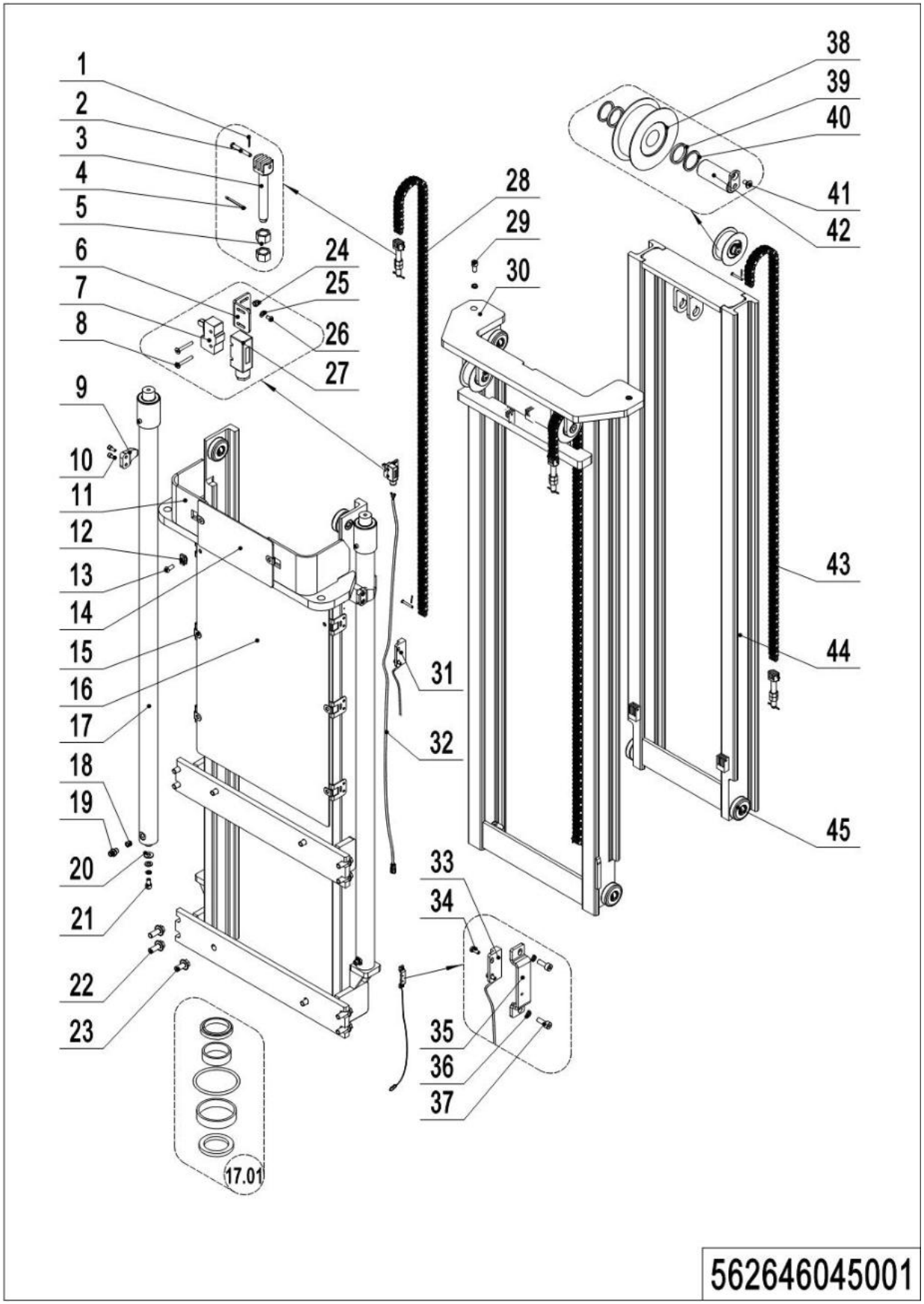

1= Supply as package. 2= Supply with constraints. 3= Phasing-out supply. 4= Supply as assembly. 5= Check other tables.

03 Three-stage mast, standard (562646045001) Continuation

No.	Item Code	Mark	Item Description	Qty.	Substitute	Note
26	910200300005	1	Screw	2		
27	920200300008		Protective Cover	1		
28	534745010009		Chain	2		4300
28	534145010005		Chain	2		4600
29	910200200097		Screw	2		
30	534745010013	2	Middle Mast(4300)	1		
30	534745010011	2	Middle Mast(4600)	1		
31	562633510003		Magnetic Switch	1		
32	562633010003		Wire Harness	1		
33	562633510002		Magnetic Switch	1		
34	910200500021	1	Screw	4		
35	534744520080		Protective Cover	2		
36	910400500003	1	Spring Washer	4		
37	910200300006	1	Screw	4		
38	940200500010		Sprocket Bearing	3		
39	940600500009	1	Washer	6		
40	940600500008	1	Washer	6		
41	910200400016	1	Screw	3		
42	533544510006		Pin	3		
43	535044510020		Chain	1		4300
43	534745010008		Chain	1		4600
44	534745010005		Inner Mast(4300)	1		
44	534745010004		Inner Mast(4600)	1		
45	940200300004		Compound Roller	8		

1= Supply as package. 2= Supply with constraints. 3= Phasing-out supply. 4= Supply as assembly. 5= Check other tables.

04 Three-stage mast, FFL (562646044501)

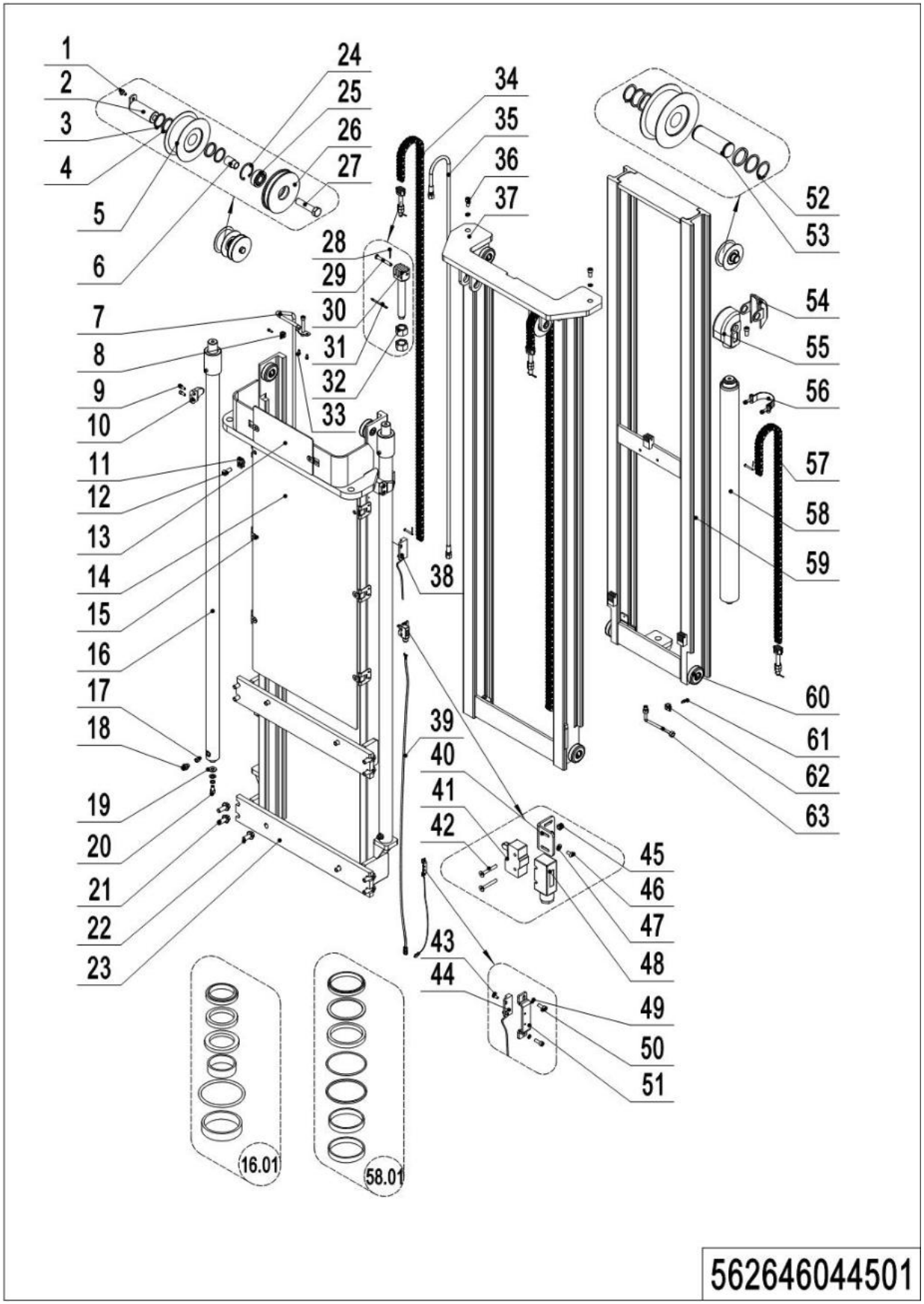

1= Supply as package. 2= Supply with constraints. 3= Phasing-out supply. 4= Supply as assembly. 5= Check other tables.

04 Three-stage mast, FFL (562646044501)

No.	Item Code	Mark	Item Description	Qty.	Substitute	Note
1	910200400016	1	Screw	2		
2	533544510006		Pin	2		
3	940600500009		Washer	6		
4	940600500008		Washer	6		
5	940200500010		Sprocket Bearing	3		
6	535944520001		Sleeve	1		
7	534744510023		Steel Tube	1		4000
7	534744510021		Steel Tube	1		4300
7	534744510020		Steel Tube	1		4600
8	951000100001		Hose Clamp	2		
9	910200200057	1	Screw	4		
10	275044020076		Fixing Plate	2		
11	940400400003		Cage Nut	2		
12	941100100005		Screw	2		
13	534744520037		Guard Plate	1		
14	534744520041		Guard Plate	1		4000
14	534744520039		Guard Plate	1		4300
14	534744520038		Guard Plate	1		4600
15	940400300001	1	Spring Buckle	4		
15	940400300001	1	Spring Buckle	6		
16	534744510019		Cylinder	2		4000
16	534744510017		Cylinder	2		4300
16	534744510016		Cylinder	2		4600
16.01	534798510000		Seal Kit	2		
17	950600300001		Safety Valve	3		
18	950400400003		Joint	3		
19	534744520015		Subplate	2		
20	910200200096	1	Screw	2		
21	910100800006	1	Bolt	8		

1= Supply as package. 2= Supply with constraints. 3= Phasing-out supply. 4= Supply as assembly. 5= Check other tables.

04 Three-stage mast, FFL (562646044501) Continuation 1

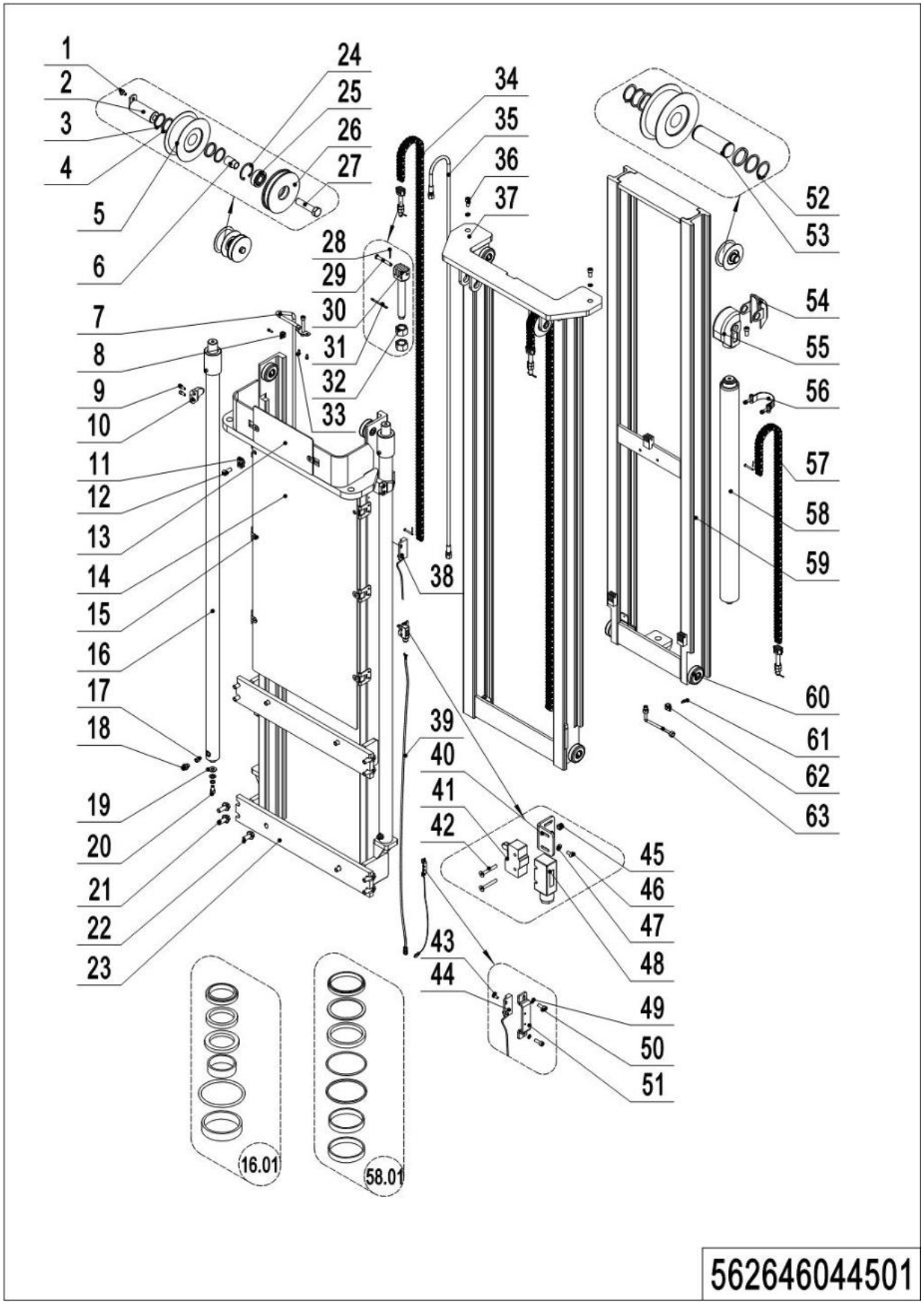

1= Supply as package. 2= Supply with constraints. 3= Phasing-out supply. 4= Supply as assembly. 5= Check other tables.

04 Three-stage mast, FFL (562646044501) Continuation 1

No.	Item Code	Mark	Item Description	Qty.	Substitute	Note
22	910100800005	1	Bolt	4		
23	534744510039	2	Outer Mast(4000)	1		
23	534744510037	2	Outer Mast(4300)	1		
23	534744510030	2	Outer Mast(4600)	1		
24	910401400013	1	Circlip	1		
25	910700200019		Bearing	1		
26	535944520000		Pulley	1		
27	910100100073	1	Bolt	1		
28	910600600006	1	Cotter Pin	6		
29	941100800012		Pin	6		
30	941300100008		Chain Bolt	3		
31	910600600023	1	Cotter Pin	3		
32	910300200008	1	Nut	6		
33	910200400006	1	Screw	2		
34	534744510047		Chain	2		4000
34	534745010009		Chain	2		4300
34	534145010005		Chain	2		4600
35	534744520043		Hose	1		4000
35	532644520143		Hose	1		4300
35	532644520144		Hose	1		4600
37	910200200097	1	Screw	3		
37	534744510040	2	Middle Mast(4000)	1		
37	534744510038	2	Middle Mast(4300)	1		
37	534744510031	2	Middle Mast(4600)	1		
38	562633510003		Magnetic Switch	1		
39	562633010003		Wire Harness	1		
40	534744520036		Fixing Plate	1		
41	920200300001		Microswitch	1		
42	910200400007	1	Screw	4		

04 Three-stage mast, FFL (562646044501) Continuation 2

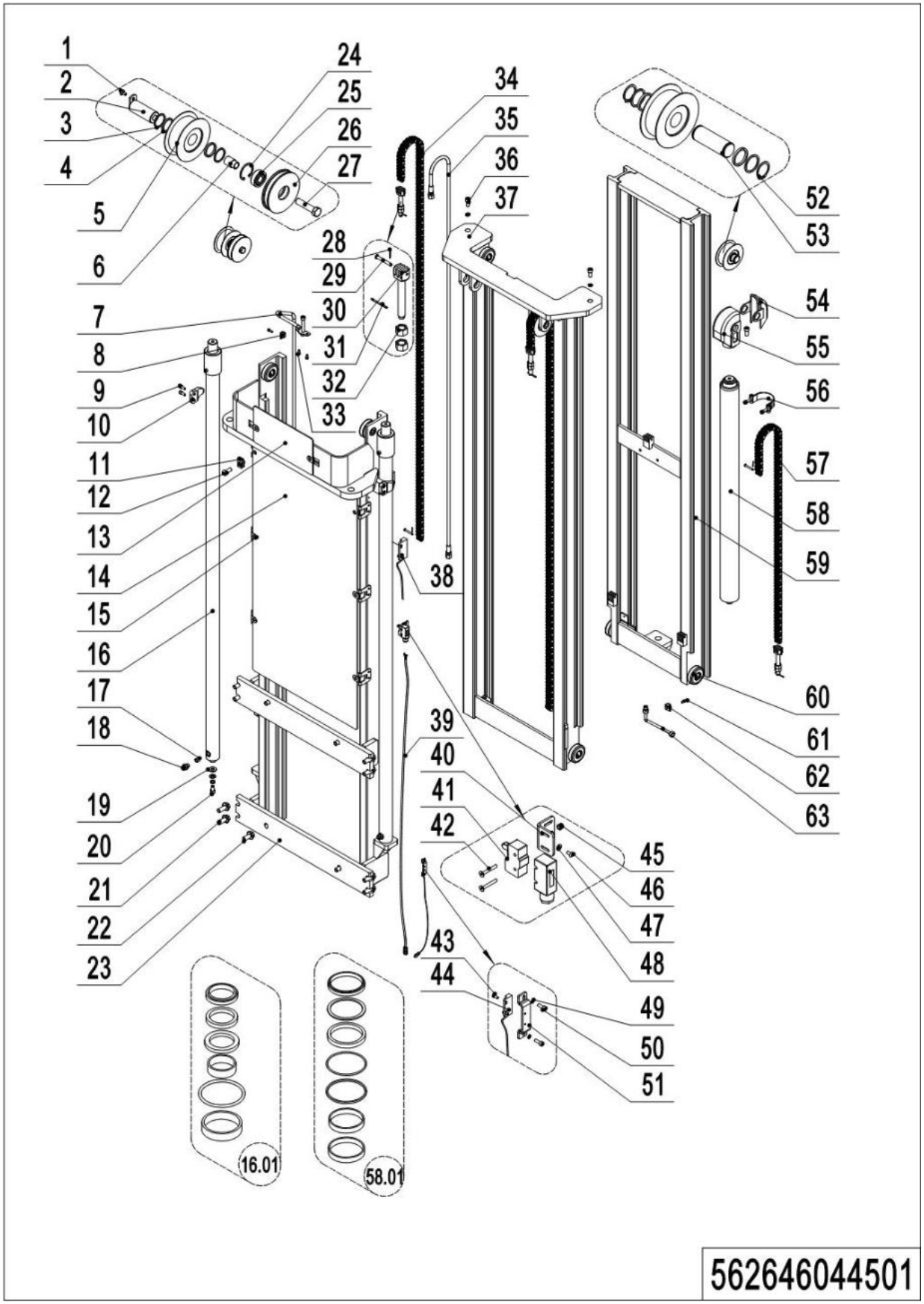

1= Supply as package. 2= Supply with constraints. 3= Phasing-out supply. 4= Supply as assembly. 5= Check other tables.

04 Three-stage mast, FFL (562646044501) Continuation 2

No.	Item Code	Mark	Item Description	Qty.	Substitute	Note
43	910200500021	1	Screw	4		
44	562633510002		Magnetic Switch	1		
45	910300500001	1	Nut	4		
46	910200500021	1	Screw	4		
47	910400100003	1	Flat Washer	4		
48	920200300008		Protective Cover	1		
49	910400500003		Spring Washer	4		
50	910200300006	1	Screw	4		
51	534744520080		Protective Cover	2		
52	910401300016	1	Circlip	2		
53	532644520037		Axle	1		
54	532644520036		Side Cover	1		
55	532644520035		Yoke	1		
56	940800600002		Hoop	1		
57	532644510075		Chain	1		4000
57	532644510077		Chain	1		4300
57	251044510096		Chain	1		4600
58	534744510045		Cylinder	1		3400
58	534744510015		Cylinder	1		4000
58	534744510013		Cylinder	1		4300
58	534744510012		Cylinder	1		4600
58.01	534798510001		Seal Kit	1		
59	534744510011	2	Inner Mast(4000)	1		
59	534744510009	2	Inner Mast(4300)	1		
59	534744510008	2	Inner Mast(4600)	1		
60	940200300004		Compound Roller	8		
61	910200200032	1	Screw	1		
62	951000100003		Hose Clamp	1		
63	533544520006		Steel Tube	1		

Chapter 5: Steering, Braking Systems and Wheels

01 Tiller (535946011001)

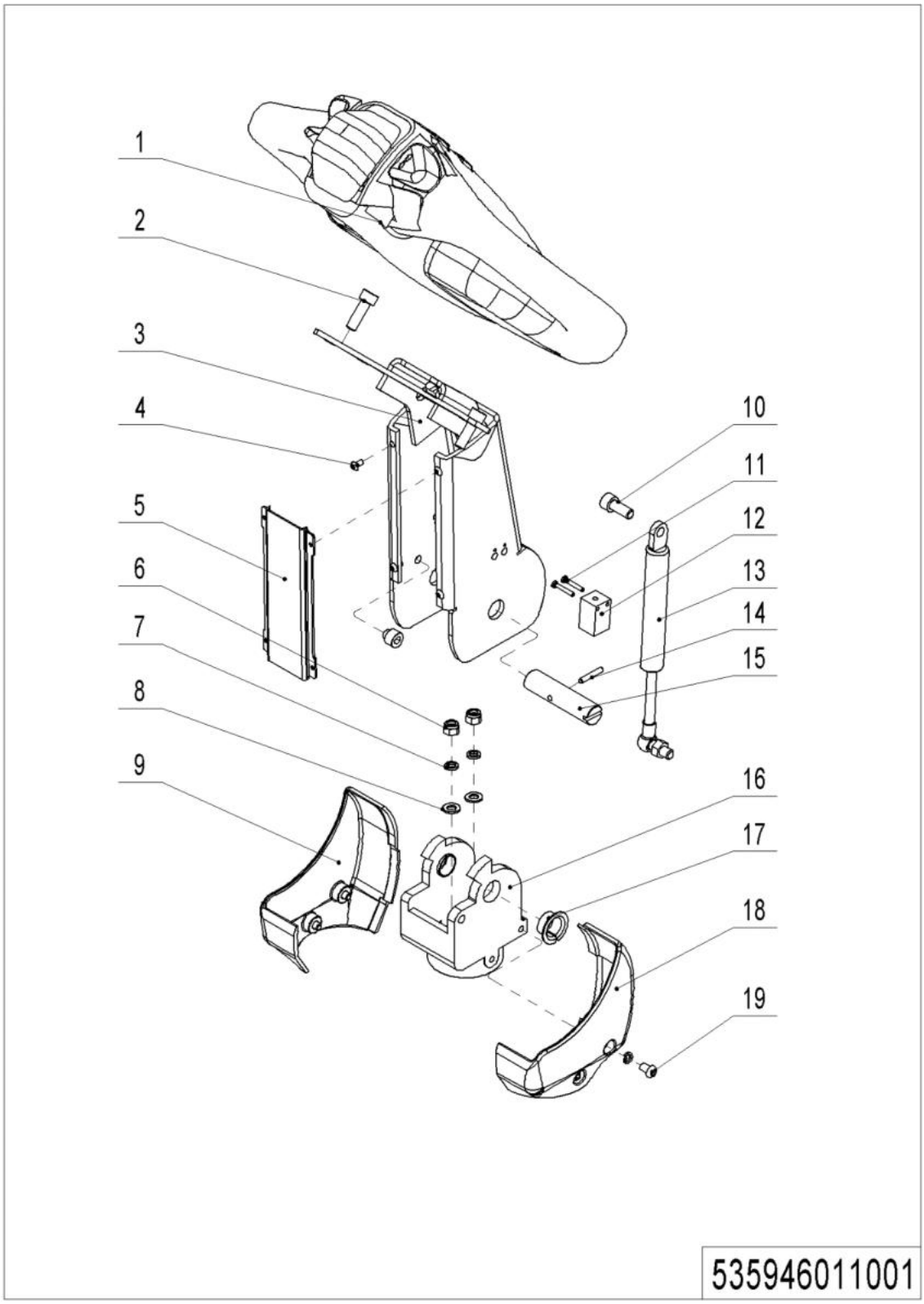

01 Tiller (535946011001)

No.	Item Code	Mark	Item Description	Qty.	Substitute	Note
1	922100100099		Control Handle	1		**See 535946011010**
2	910200200058	1	Screw	2		
3	535911010000	2	Tiller	1		
3	535911010001	2	Tiller	1		**Short tiller**
4	910200300005	1	Screw	4		
5	535911020003		Close Plate	1		
5	535911020008		Close Plate	1		**Short tiller**
6	910300500005	1	Nut	2		
7	910400500007	1	Spring Washer	2		
8	910400100007	1	Flat Washer	2		
9	535911020005		Protective Cover	1		
10	910200200057	1	Screw	1		
11	910200500015	1	Screw	2		
12	506733510002		Proximity Switch	1		
13	940400100001		Air Spring	1		
13	940400100045		Air Spring	1		**Short tiller**
14	910600400013		Spring Pin	1		
15	505611020008		Axle	1		
16	535911020004		Bracket	1		
16	535911020009		Bracket	1		**Short tiller**
17	940500200002		Bushing	2		
18	535911020006		Protective Cover	1		
19	910200300016	1	Screw	4		

1= Supply as package. 2= Supply with constraints. 3= Phasing-out supply. 4= Supply as assembly. 5= Check other tables.

02 Tiller (535946011010)

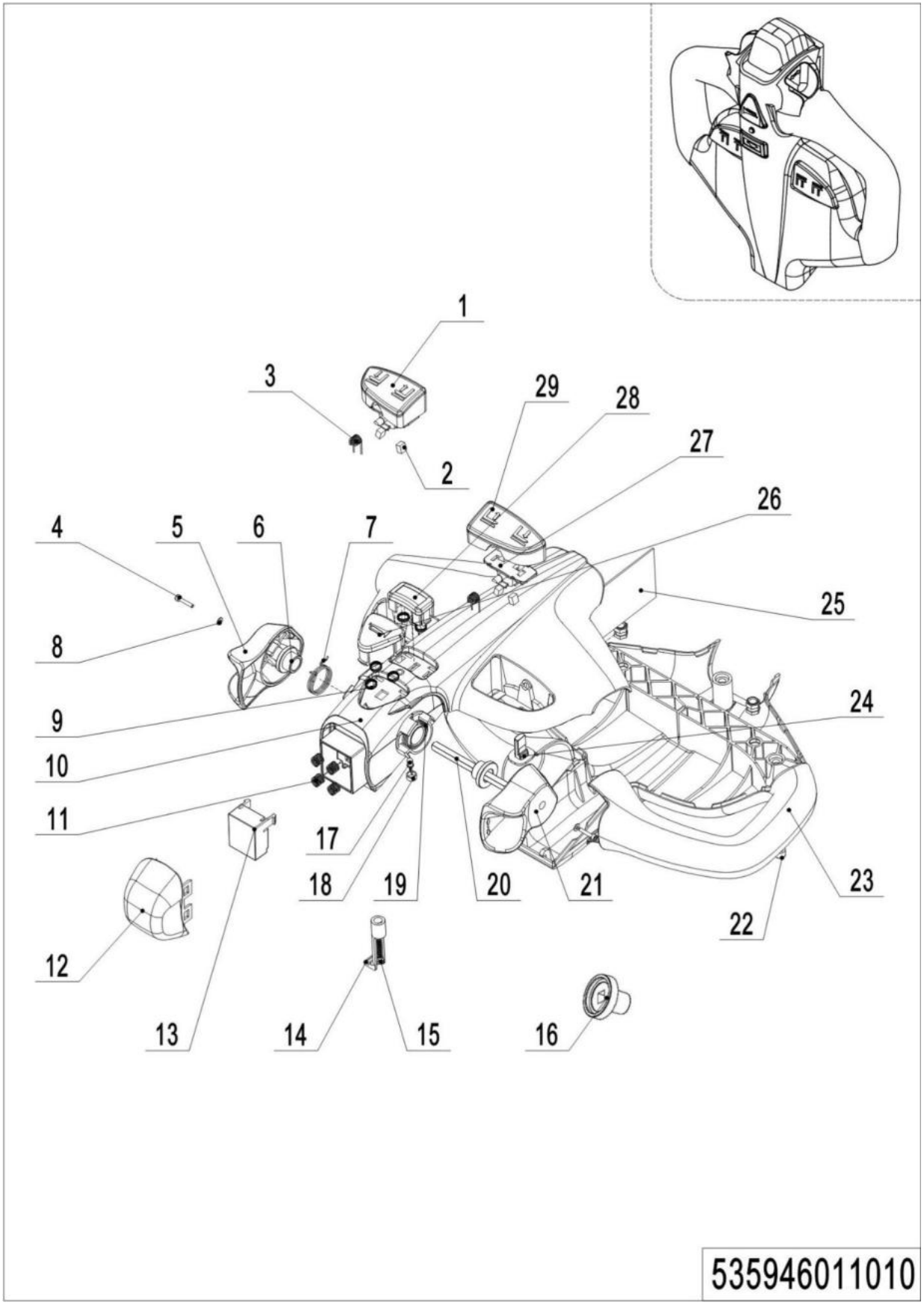

1= Supply as package. 2= Supply with constraints. 3= Phasing-out supply. 4= Supply as assembly. 5= Check other tables.

02 Tiller (535946011010)

No.	Item Code	Mark	Item Description	Qty.	Substitute	Note
--	922100100099		Control Handle	1		
1	505698520016		Button cap	1		
2	505698520005		Magnet	4		
3	505698520018		Torsional Spring	2		
4	505698520008		Screw	2		
5	505698520001		Traction lever	1		
6	505698520004		Sleeve	2		
7	505698520027		Torsional Spring	1		
8	505698520009		Washer	2		
9	505698520003		Spring	5		
10	505698520099		O-Ring	1		
11	505698520006		Spring	4		
12	505698520020		Button Cap-	1		
13	505698520100		Paper Washer	1		
14	505698520012		Clamp	1		
15	505698520023		Screw	1		
16	505698520102		Gear	2		
17	505698520024		Light	1		
18	505698520025		Lamp Holder	1		
19	505698520026		Torsional Spring	1		
20	505698520011		Axle-Traction lever	1		
21	505698520010		Traction lever	1		
22	505698520007		Screw	3		
23	505698520015		Handle Cap	1		
24	505698520013		Sensor	2		
25	505698520101		Flange	1		
26	505698520002		Horn Button	1		
27	505698520017		Fixing Base	2		
28	505698520021		Button Cap	1		
29	505698520022		Button Cap	1		

1= Supply as package. 2= Supply with constraints. 3= Phasing-out supply. 4= Supply as assembly. 5= Check other tables.

03 Load wheel (562646017001)

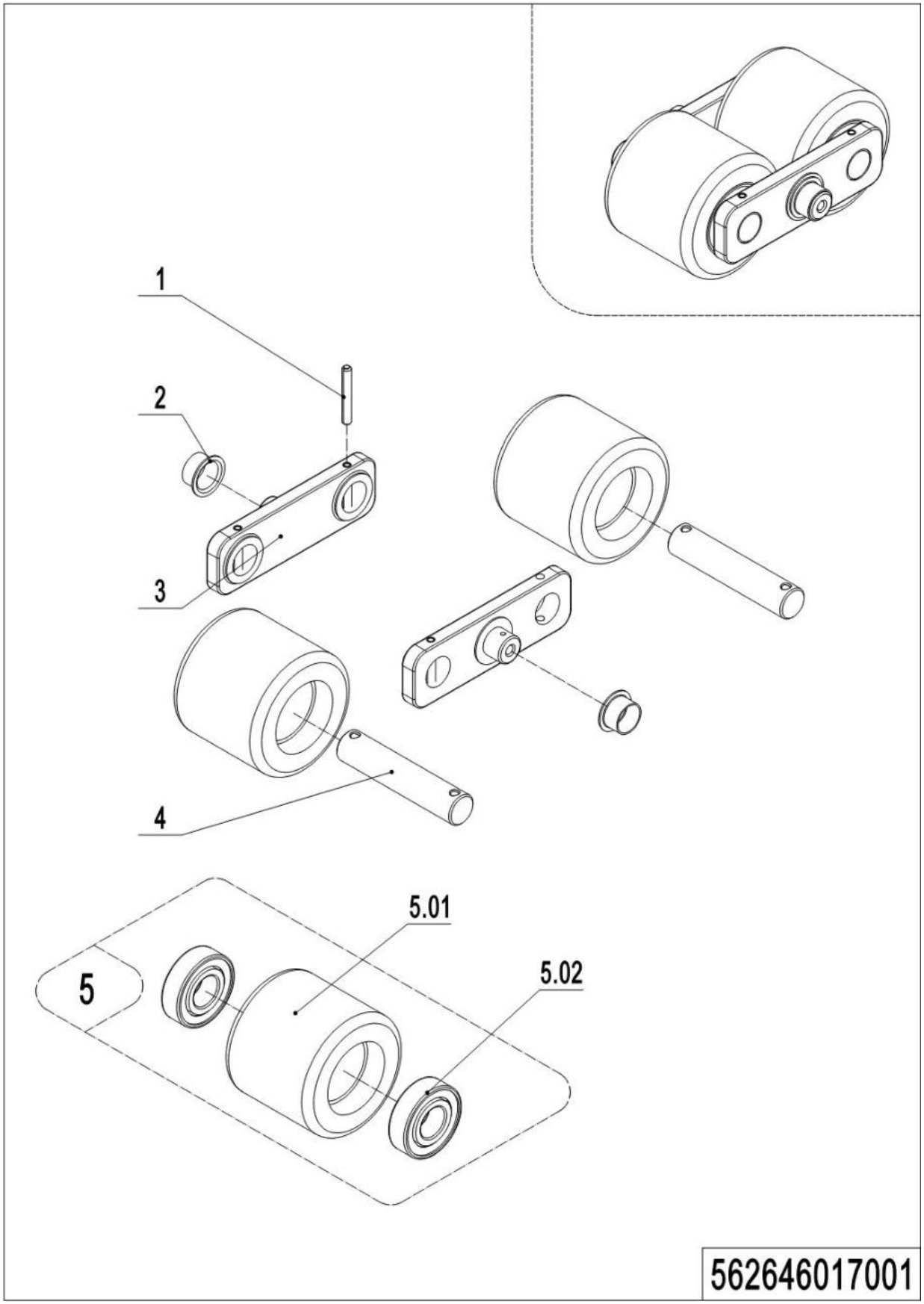

1= Supply as package. 2= Supply with constraints. 3= Phasing-out supply. 4= Supply as assembly. 5= Check other tables.

03 Load wheel (562646017001)

No.	Item Code	Mark	Item Description	Qty.	Substitute	Note
--	562698510002		Wheel	2		
1	910600400028	1	Spring Pin	4		
2	940500200003		Bushing	2		
3	505617020001		Plate	2		
4	560517020000		Axle	2		
5	502398510002		Wheel	2		
5.01	940300300005	4	WheelΦ80x70	2		
5.02	910700200019	4	Bearing	4		

1= Supply as package. 2= Supply with constraints. 3= Phasing-out supply. 4= Supply as assembly. 5= Check other tables.

04 Side wheel (562646016501)

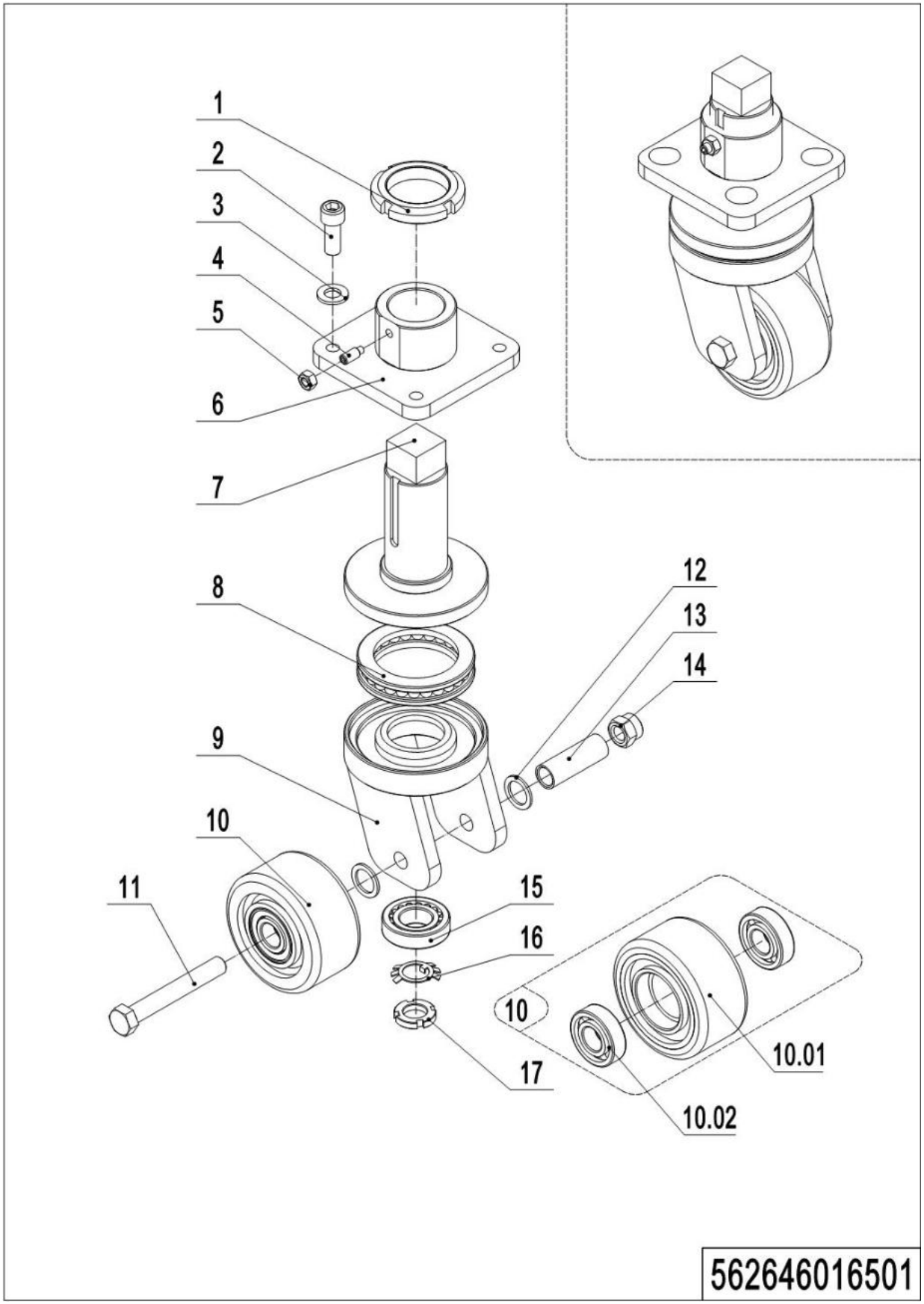

1= Supply as package. 2= Supply with constraints. 3= Phasing-out supply. 4= Supply as assembly. 5= Check other tables.

04 Side wheel (562646016501)

No.	Item Code	Mark	Item Description	Qty.	Substitute	Note
--	562698510003		Caster Assembly	1		
1	941100900004	1	Nut	1		
2	910200200098	1	Screw	4		
3	910400100008	1	Flat Washer	4		
4	910201000012	1	Screw	1		
5	910300100006	1	Nut	1		
6	532216510003		Fixing Base	1		
7	532216510002		Axle	1		
8	910700700011		Bearing	1		
9	562616510001		Wheel Carrier	1		
10	533298510003		Wheel	1		
10.01	940300300020	4	WheelΦ150x54	1		
10.02	910700200019	4	Bearing	2		
11	910100100069	1	Bolt	1		
12	940600500005	1	Washer	2		
13	532616520003		Bushing	1		
14	910300500007	1	Nut	1		
15	910700600001		Bearing	1		
16	910400900002	1	Lock Washer	1		
17	910300700008	1	Nut	1		

Chapter 6: Electrical Components

01 Display assembly (562646010001)

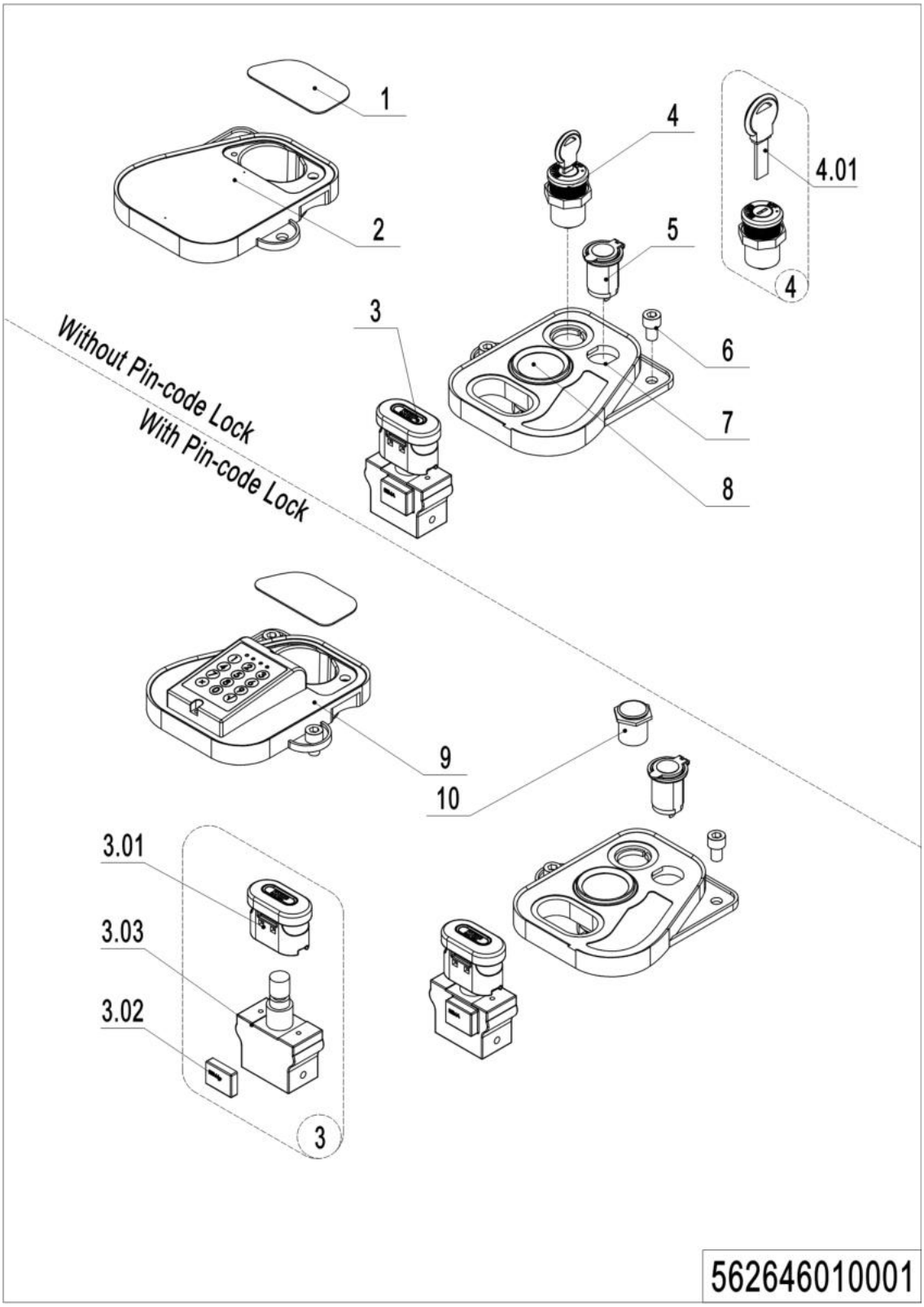

01 Display assembly (562646010001)

No.	Item Code	Mark	Item Description	Qty.	Substitute	Note
1	535910020003		Close Plate	1		
2	535910020002		Bezel	1		
3	920200100009		Emergency Button	1		ADK
3	920200100032		Emergency Button			MSD
3.01	920200100010		Emergency Button	1		ADK
3.01	920200100039		Emergency Button			MSD
3.02	920200100012		Micro Shitch	1		ADK
3.02	920200100040		Micro Shitch			MSD
3.03	920200100014		Emergency Button			ADK
3.03	920200100041		Emergency Button			MSD
4	505634010000		Key Switch	1		
4.01	920200200025		Key Switch	1		
5	206033010036		USB interface	1		
5	921000200859		USB interface	1		Type-C
6	910200200074	1	Screw	4		
7	535910020001		Bezel	1		
8	921100100135		Display	1		
9	920200200014		Pin-code Lock	1		
10	506734010000		Button	1		

1= Supply as package. 2= Supply with constraints. 3= Phasing-out supply. 4= Supply as assembly. 5= Check other tables.

02 Electrical wiring harness (manual steering) (562646033010)

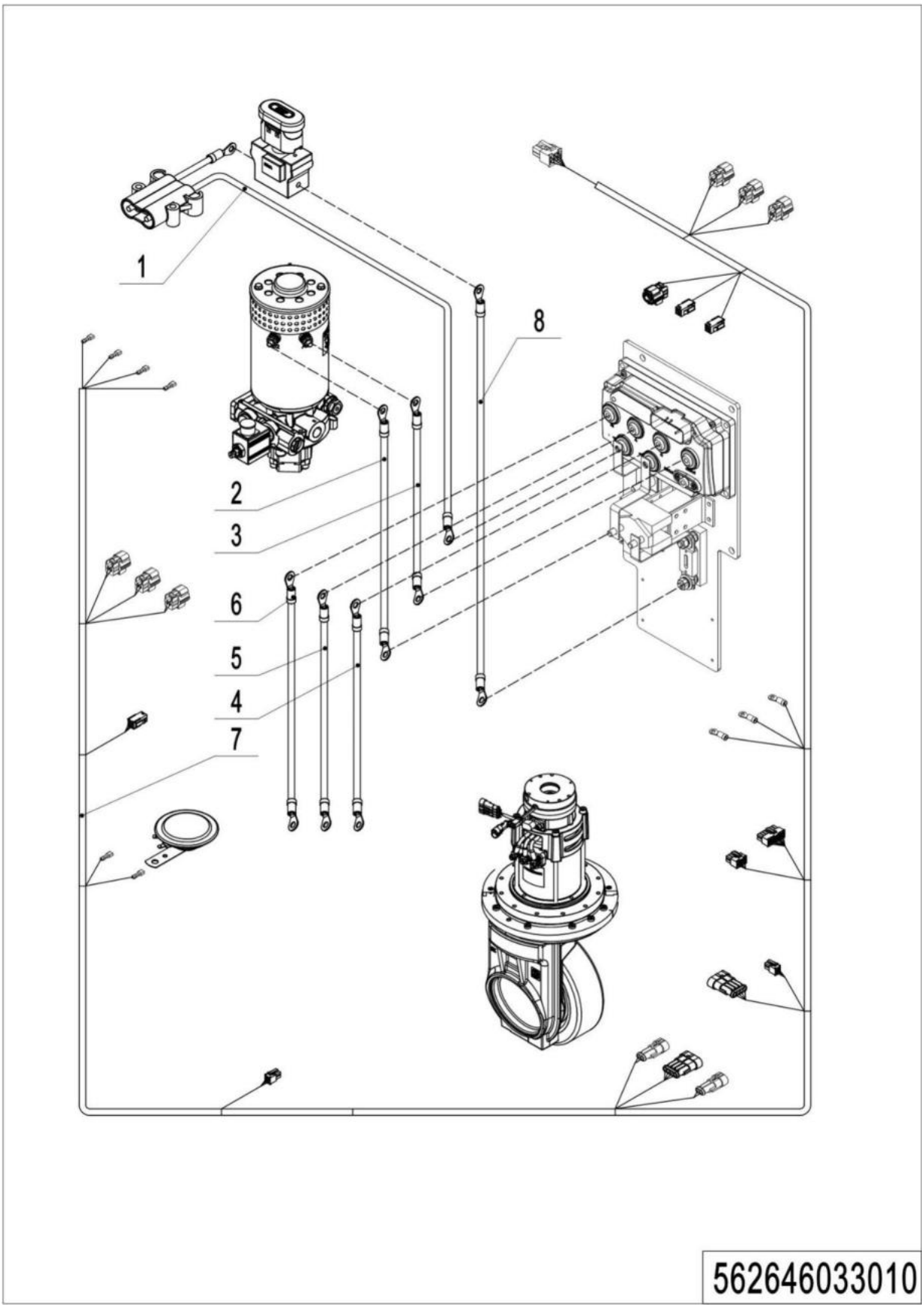

1= Supply as package. 2= Supply with constraints. 3= Phasing-out supply. 4= Supply as assembly. 5= Check other tables.

02 Electrical wiring harness (manual steering) (562646033010)

No.	Item Code	Mark	Item Description	Qty.	Substitute	Note
1	562633010012		Wiring Harness	1		
2	562633010008		Cable	1		
3	562633010009		Cable	1		
4	562633010004		Cable	1		
5	562633010005		Cable	1		
6	562633010006		Cable	1		
7	562633010000		Wiring Harness	1		
8	562633010007		Cable	1		

03 Electrical wiring harness (electric steering) (562646033011)

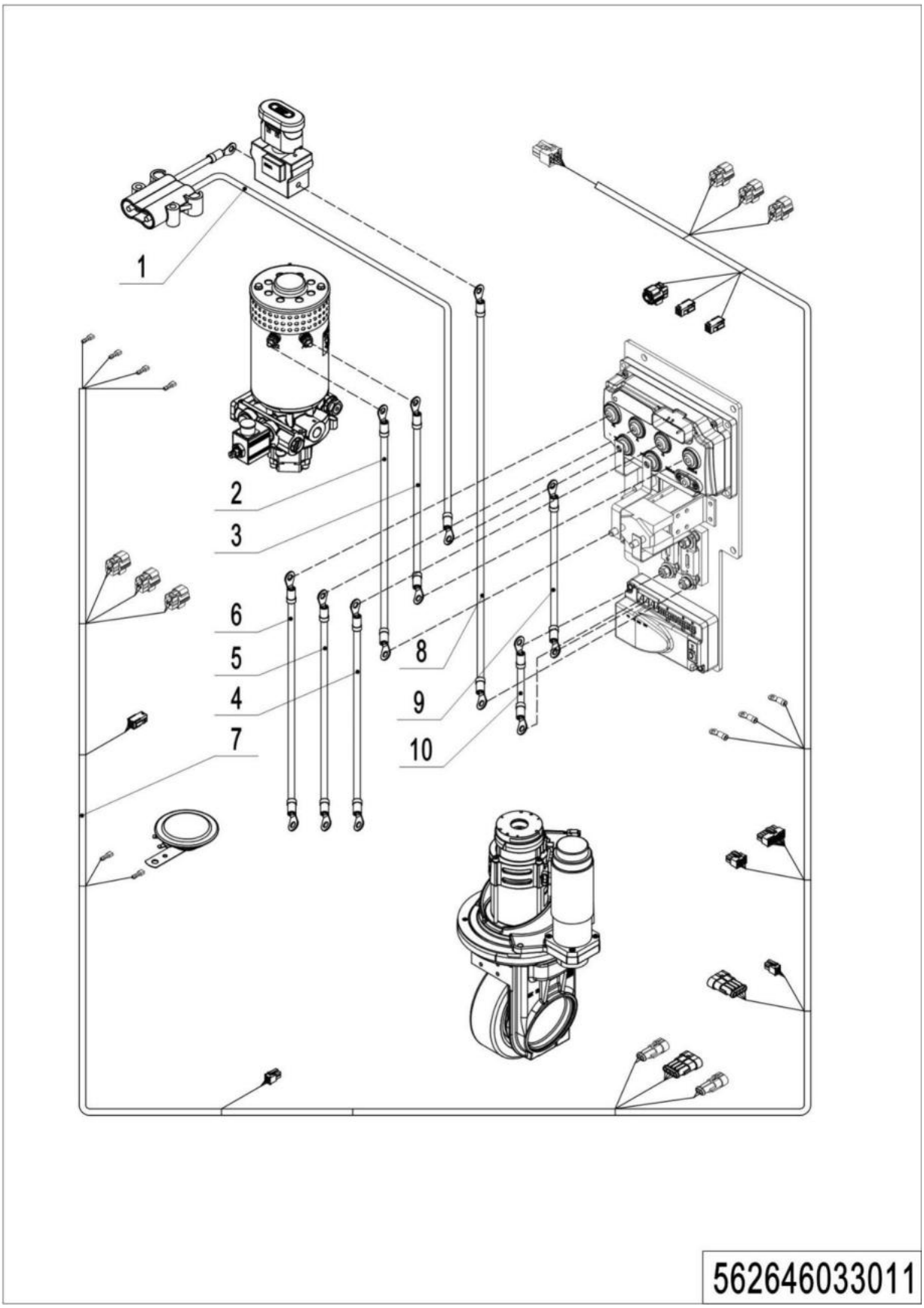

1= Supply as package. 2= Supply with constraints. 3= Phasing-out supply. 4= Supply as assembly. 5= Check other tables.

03 Electrical wiring harness (electric steering) (562646033011)

No.	Item Code	Mark	Item Description	Qty.	Substitute	Note
1	562633010012		Wiring Harness	1		
2	562633010008		Cable	1		
3	562633010009		Cable	1		
4	562633010004		Cable	1		
5	562633010005		Cable	1		
6	562633010006		Cable	1		
7	562633010001		Wiring Harness	1		
8	562633010007		Cable	1		
9	562633010017		Cables	1		
10	562633010014		Cables	1		

04 Controller assembly (manual steering) (562646033012)

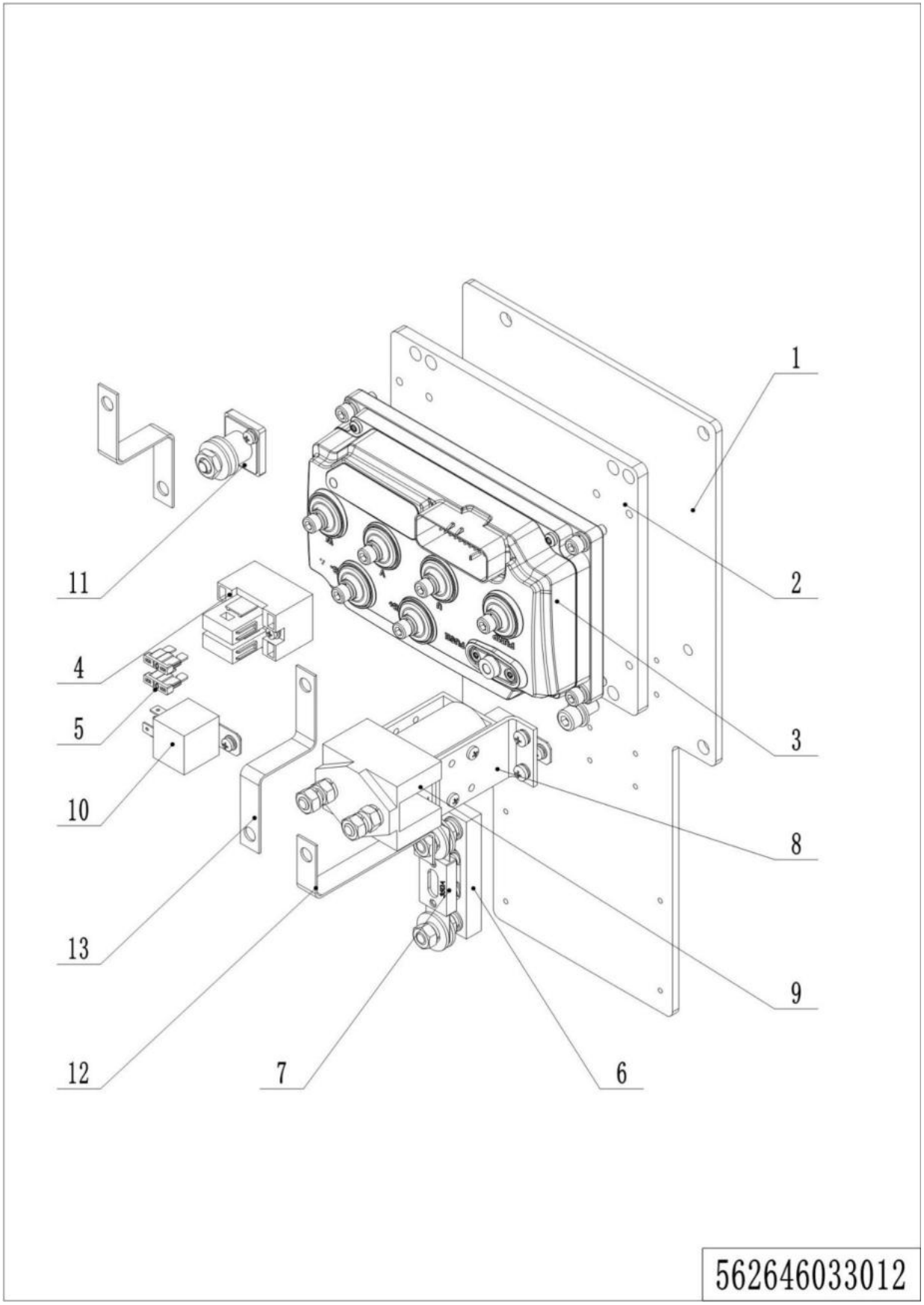

1= Supply as package. 2= Supply with constraints. 3= Phasing-out supply. 4= Supply as assembly. 5= Check other tables.

04 Controller assembly (manual steering) (562646033012)

No.	Item Code	Mark	Item Description	Qty.	Substitute	Note
1	562633020001		Mounting Plate	1		
2	534733020003		Plate	1		
3	562633210009		Controller	1		F2C+HPI3.2KW+ EN1175-2020
3	562633210011		Controller	1		F2C+VIB03.2KW+ EN1175-2020
4	920100400005		Fuse Holder	1		
5	920100200002		Fuse	2		
6	920100400002		Fuse Holder	1		
7	920100100013		Fuse	1		
8	921300400004		Holder	1		
9	920700100002		Contactor	1		
10	920800100011		Relay	1		
11	920100400001		Fuse Holder	1		
12	535933020004		Copper Busbar	1		
13	535933020006		Copper Busbar	2		

05 Controller assembly (electric steering) (562646033013)

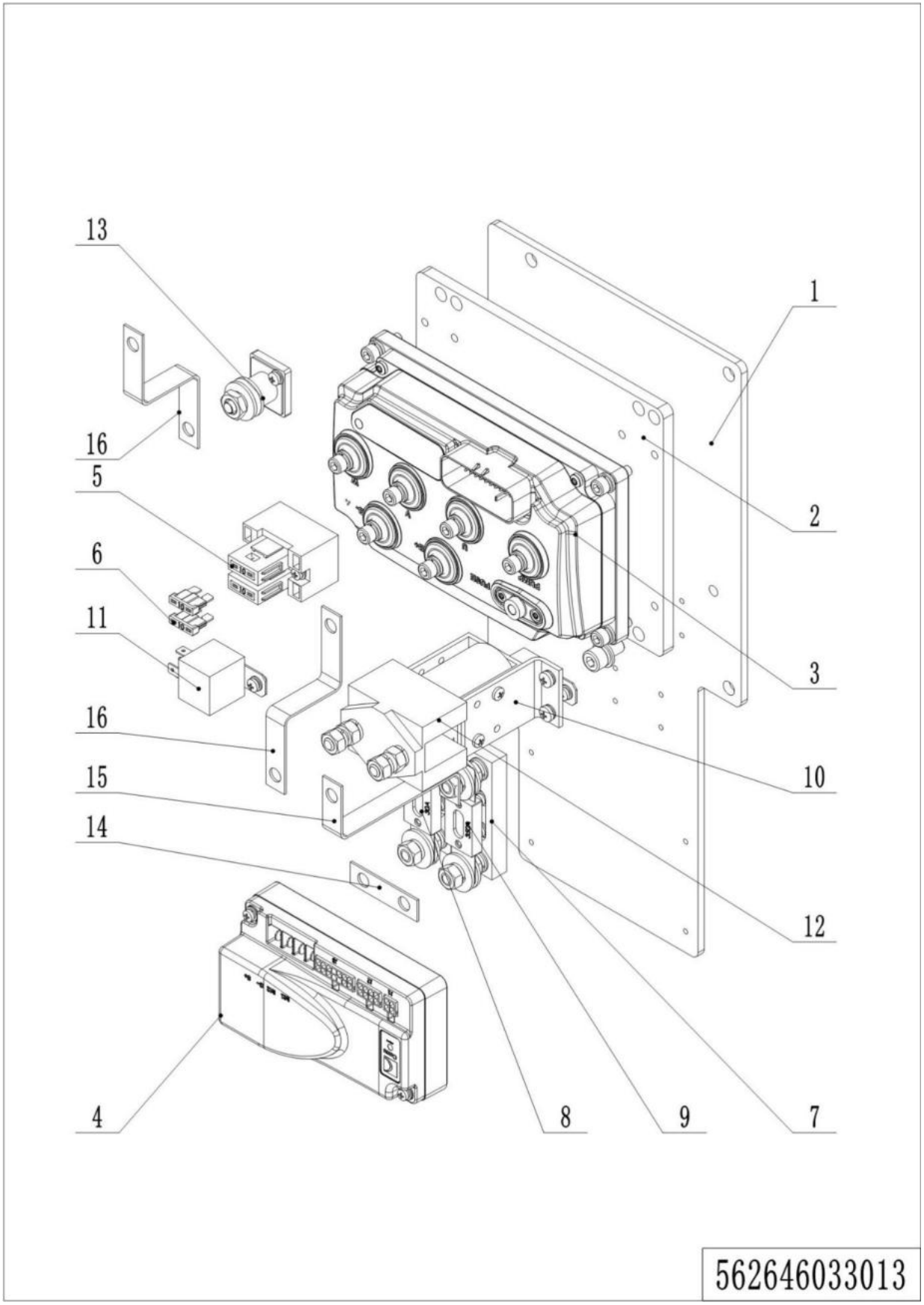

1= Supply as package. 2= Supply with constraints. 3= Phasing-out supply. 4= Supply as assembly. 5= Check other tables.

05 Controller assembly (electric steering) (562646033013)

No.	Item Code	Mark	Item Description	Qty.	Substitute	Note
1	562633020001		Mounting Plate	1		
2	534733020003		Plate	1		
3	562633210014		Controller	1		F2C+1220E+HPI3.2K W+ EN1175-2020
3	562633210016		Controller	1		F2C+1220E+VIB03.2 KW+ EN1175-2020
4	562633210013		Controller	1		
5	920100400005		Fuse Holder	1		
6	920100200002		Fuse	2		
7	920100400002		Fuse Holder	2		
8	920100100001		Fuse	1		
9	920100100013		Fuse	1		
10	921300400004		Holder	1		
11	920800100011		Relay	1		
12	920700100002		Contactor	2		
13	920100400001		Fuse Holder	2		
14	505633020003		Copper Busbar	1		
15	535933020004		Copper Busbar	1		
16	535933020006		Copper Busbar	2		

06 Charger (562646036501)

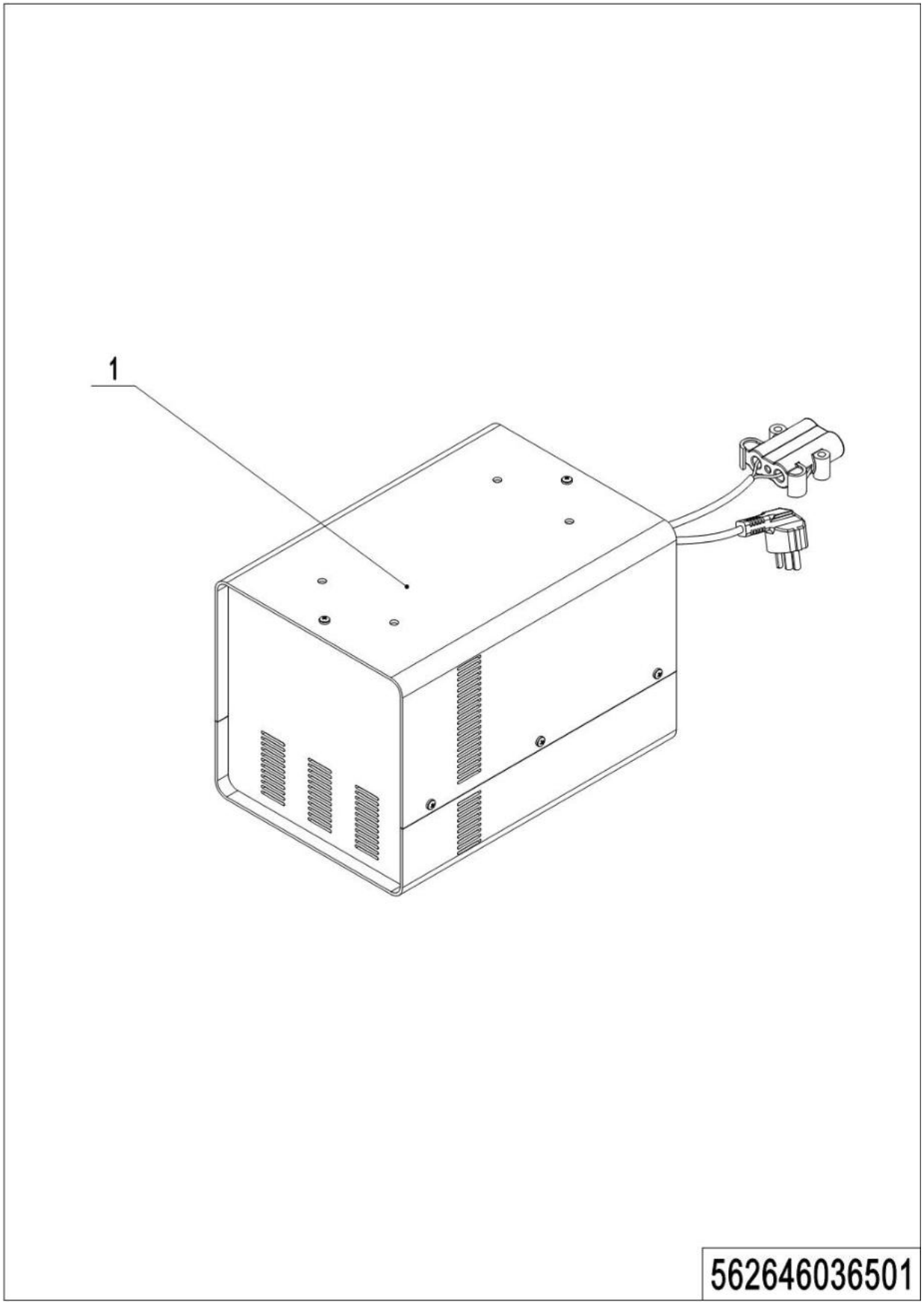

1= Supply as package. 2= Supply with constraints. 3= Phasing-out supply. 4= Supply as assembly. 5= Check other tables.

06 Charger (562646036501)

No.	Item Code	Mark	Item Description	Qty.	Substitute	Note
1	921000200183		Charger24V35A(Aisa-CHN)	1		
1	921000200184		Charger24V35A(Aisa-ENG)	1		
1	921000200185		Charger24V35A(EU)	1		
1	921000200186		Charger24V35A(ENG)	1		
1	921000200187		Charger24V35A(AUS)	1		
1	921000200188		Charger24V35A(USA)	1		
1	921000200365		Charger24V35A(ISR)	1		
1	921000200489		Charger24V35A(BRA)	1		
1	921000200284		Charger24V35A(Aisa-CHN)	1		
1	921000200290		Charger24V35A(Aisa-ENG)	1		
1	921000200294		Charger24V35A(EU)	1		
1	921000200302		Charger24V35A(AUS)	1		
1	921000200298		Charger24V35A(ENG)	1		
1	921000200306		Charger24V35A(USA)	1		
1	921000200366		Charger24V35A(ISR)	1		
1	921000200283		Charger24V30A(Aisa-CHN)	1		
1	921000200289		Charger24V30A(Aisa-ENG)	1		
1	921000200293		Charger24V30A(EU)	1		
1	921000200301		Charger24V30A(AUS)	1		
1	921000200297		Charger24V30A(ENG)	1		
1	921000200305		Charger24V30A(USA)	1		
1	921000200368		Charger24V30A(ISR)	1		
1	921000200001		Charger24V30A(Aisa-CHN)	1		
1	921000200002		Charger24V30A(Aisa-ENG)	1		
1	921000200003		Charger24V30A(EU)	1		
1	921000200004		Charger24V30A(AUS)	1		
1	921000200005		Charger24V30A(ENG)	1		
1	921000200006		Charger24V30A(USA)	1		
1	921000200490		Charger 24V30A(BRA)	1		
1	921000200360		Charger24V30A(ISR)	1		

1= Supply as package. 2= Supply with constraints. 3= Phasing-out supply. 4= Supply as assembly. 5= Check other tables.

08 Traction battery (534746037001)

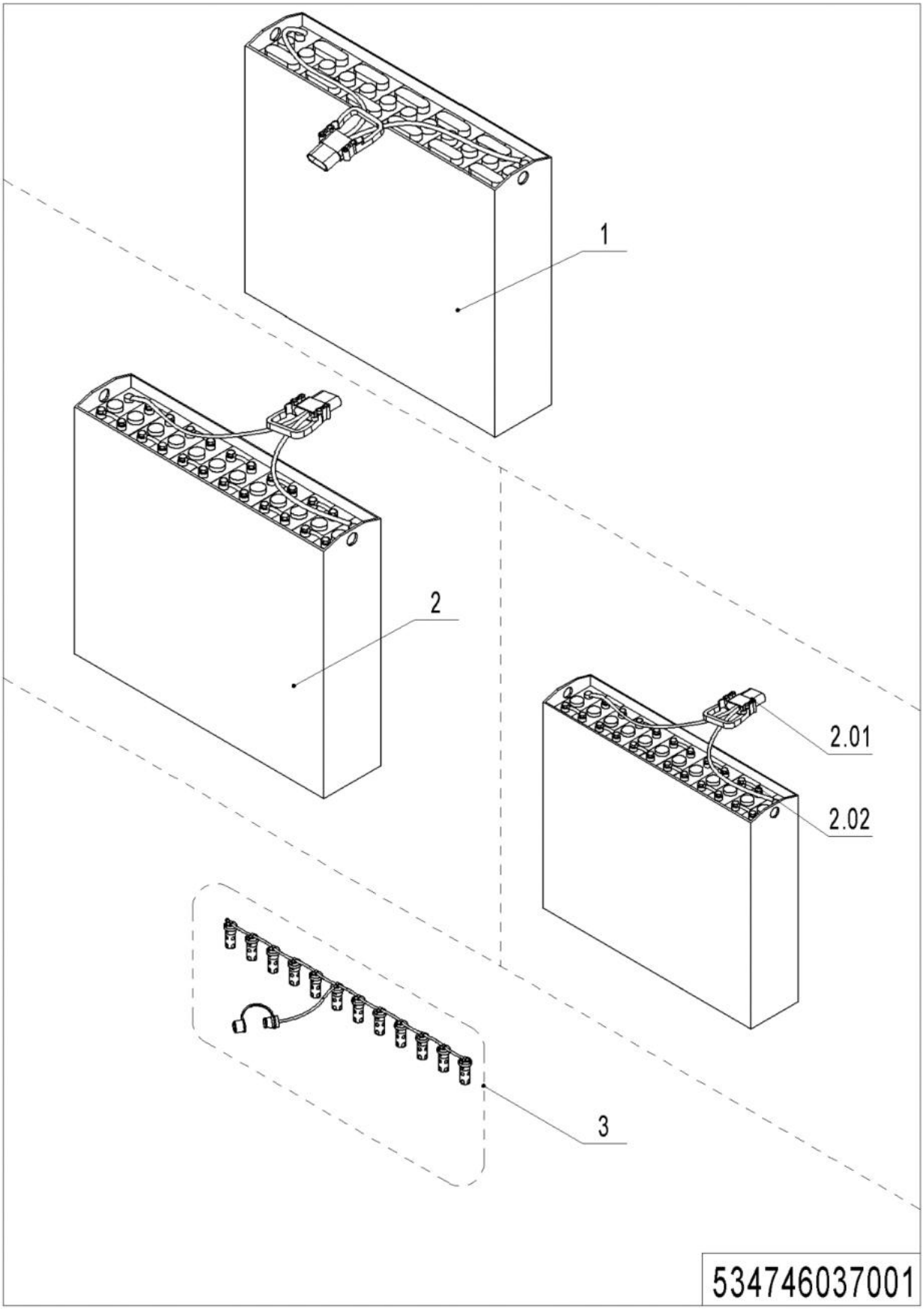

1= Supply as package. 2= Supply with constraints. 3= Phasing-out supply. 4= Supply as assembly. 5= Check other tables.

08 Traction battery (534746037001)

No.	Item Code	Mark	Item Description	Qty.	Substitute	Note
1	920600100593		Battery24V270Ah	1		
1	920600100519		Battery24V210Ah	1		
1	920600100520		Battery24V240Ah	1		
2	920600100517		Battery24V270Ah	1		
2	920600100596		Battery24V210Ah	1		
2	920600100597		Battery24V240Ah	1		
2.01	920400100007		Connector	1		For all battery
2.02	505698520000		Bolt	24		For Bolted battery
3	535937110000		Water refilling system	1		Optional

09 lithium battery(562646037002)

Chapter 7: Special Equipment

01 Load Backrest (532646040501)(Optional)

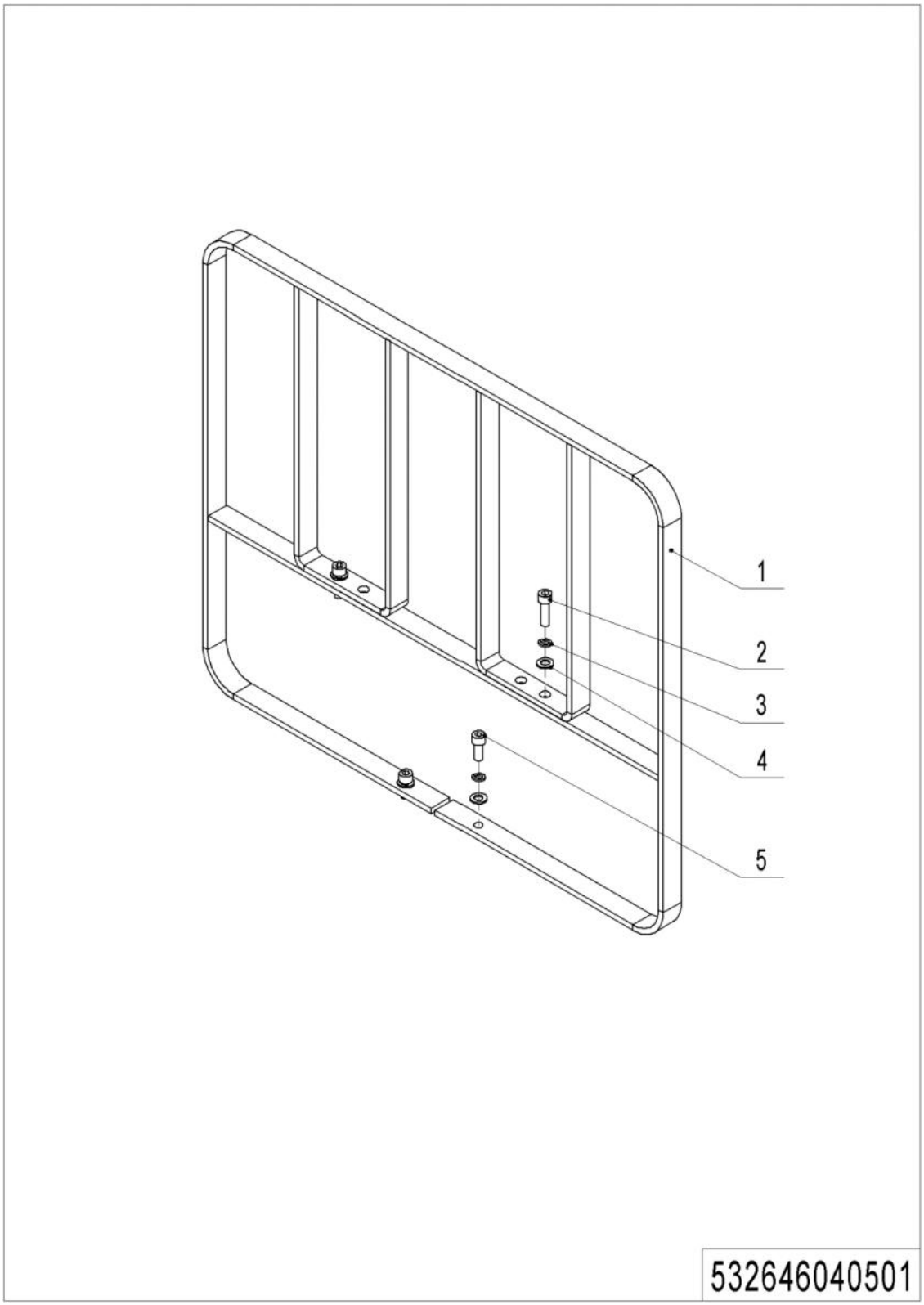

1= Supply as package. 2= Supply with constraints. 3= Phasing-out supply. 4= Supply as assembly. 5= Check other tables.

01 Load Backrest (532646040501)(Optional)

No.	Item Code	Mark	Item Description	Qty.	Substitute	Note
1	532640510001		Load Backrest	1		
2	910200200076	1	Screw	2		
3	910400500007	1	Spring Washer	4		
4	910400100007	1	Flat Washer	4		
5	910200200078	1	Screw	2		

1= Supply as package. 2= Supply with constraints. 3= Phasing-out supply. 4= Supply as assembly. 5= Check other tables.

Chapter 8: Others

01 Labels and Decals (Europe) (562646047001)

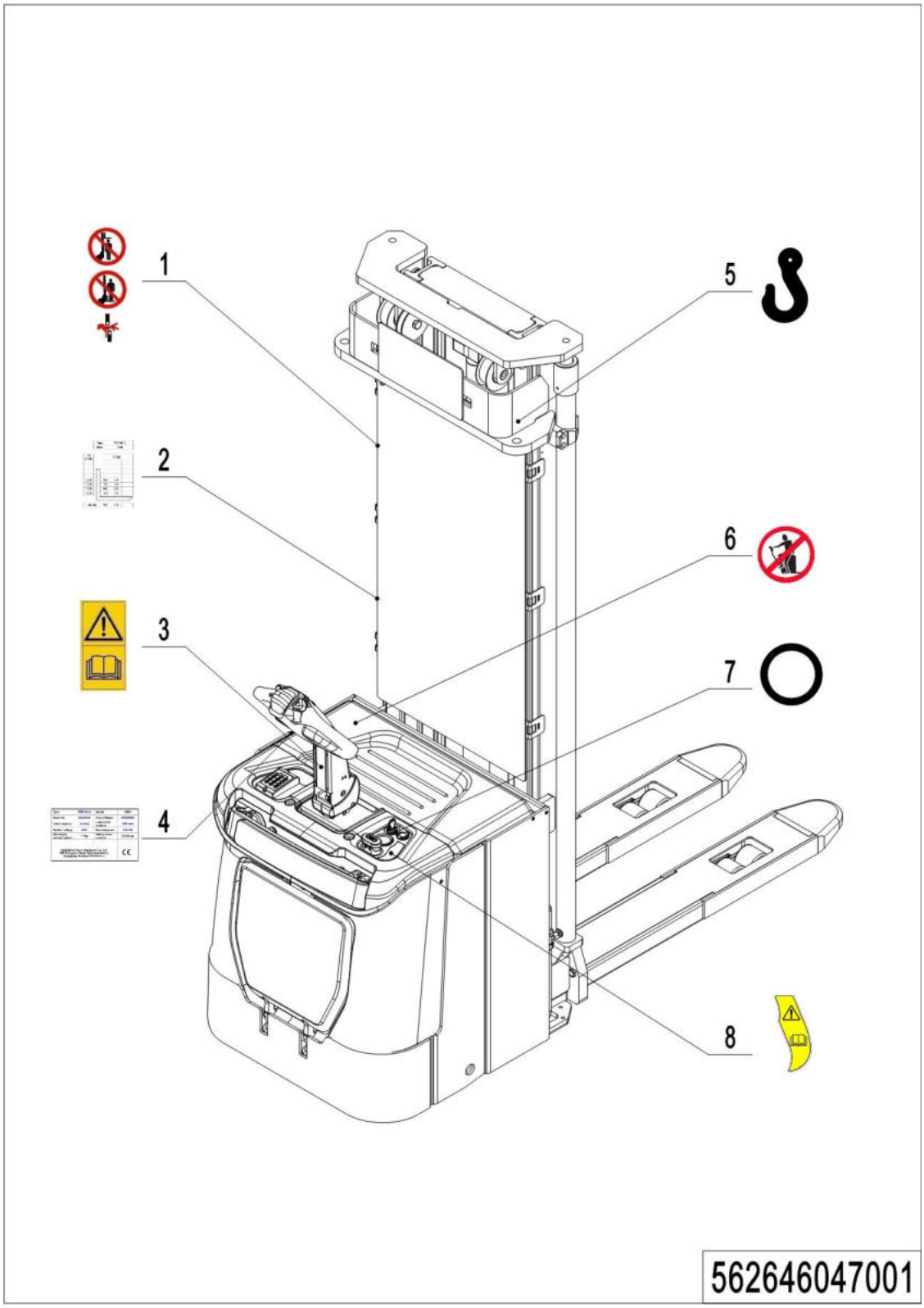

1= Supply as package. 2= Supply with constraints. 3= Phasing-out supply. 4= Supply as assembly. 5= Check other tables.

01 Labels and Decals (Europe) (562646047001)

No.	Item Code	Mark	Item Description	Qty.	Substitute	Note
1	941200100004		Label	2		
2	562647020001		Load Capacity Diagram	1		
3	941200300002		Label	1		
4	562647520001		Identification Plat	1		
5	941200300001		Label	2		
6	941200100006		Label	1		
7	941200400013		Label	1		
8	941200300018		Label	1		

1= Supply as package. 2= Supply with constraints. 3= Phasing-out supply. 4= Supply as assembly. 5= Check other tables.

Appendix

01 Electrical diagram (manual steering)

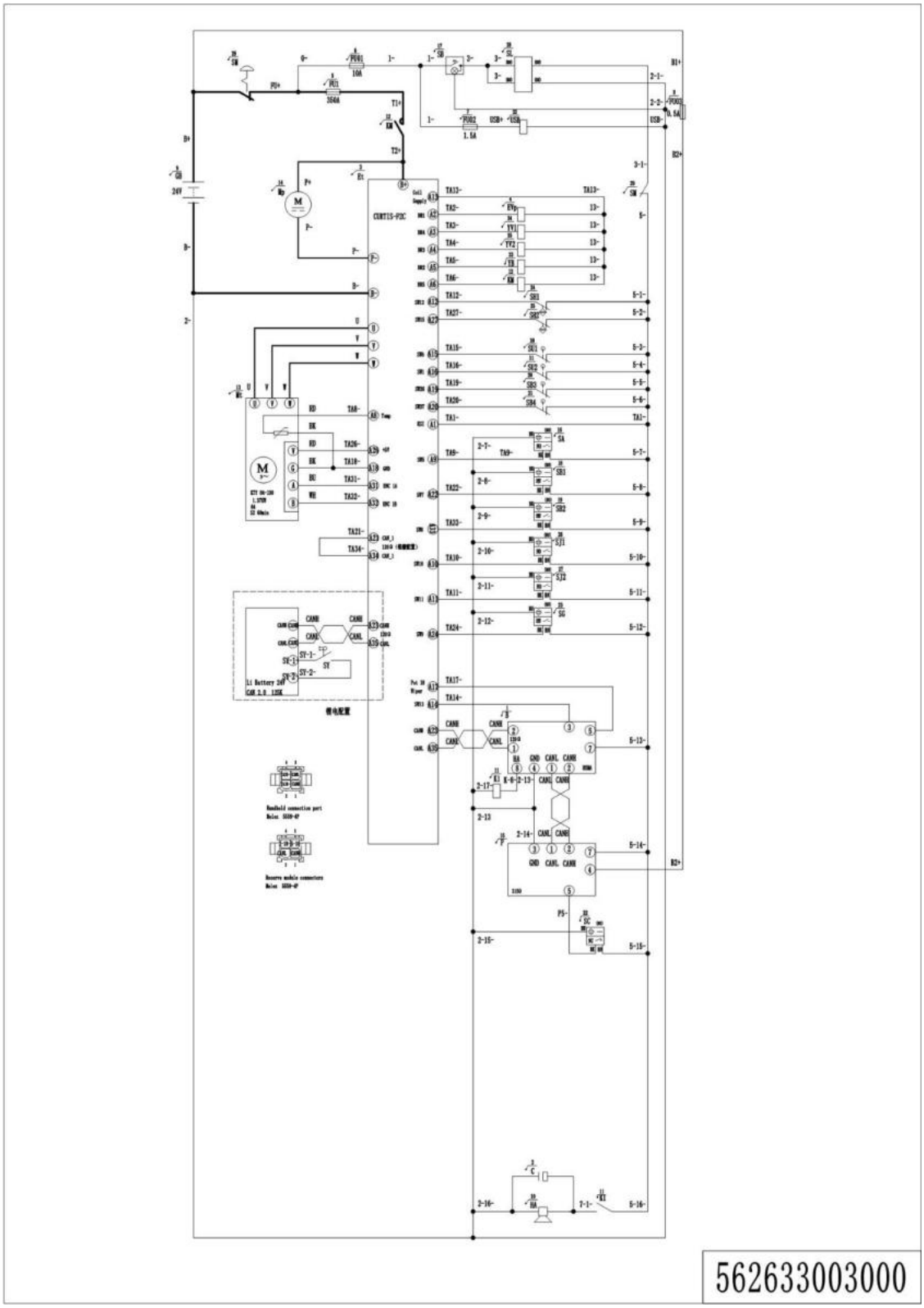

1= Supply as package. 2= Supply with constraints. 3= Phasing-out supply. 4= Supply as assembly. 5= Check other tables.

02 Electrical diagram (electric steering)

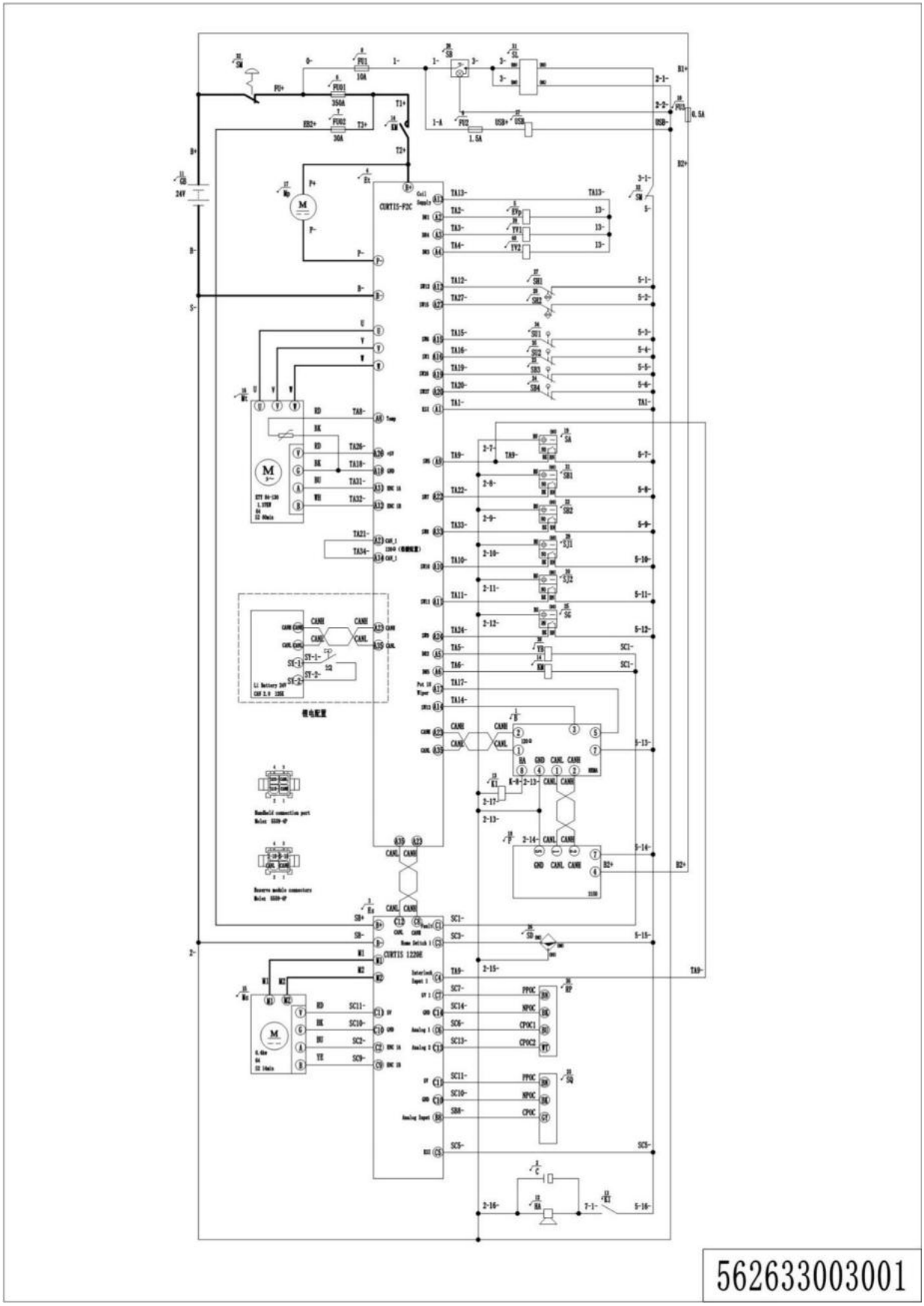

1= Supply as package. 2= Supply with constraints. 3= Phasing-out supply. 4= Supply as assembly. 5= Check other tables.

03 Hydraulic diagram

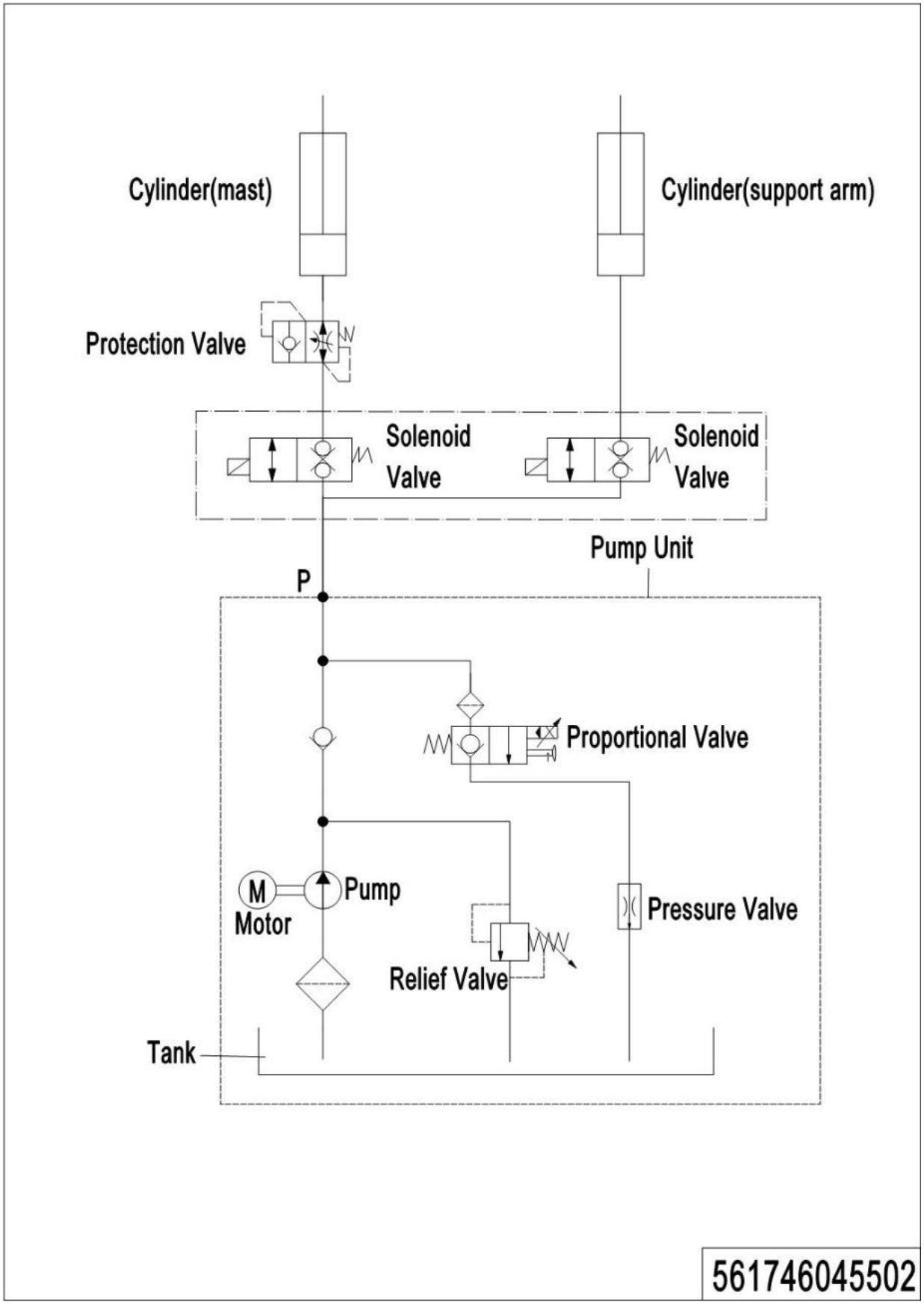

1= Supply as package. 2= Supply with constraints. 3= Phasing-out supply. 4= Supply as assembly. 5= Check other tables.

04 List of consumable parts

No.	Item Code	Item Description	Qty.	Chapter/ Section/ Number
1	940300400034	WheelΦ230x75	1	Chapter 1/01/20Chapter 1/03/21
2	535998520004	Safety Element	1	Chapter 1/02/4.05Chapter 1/04/4.05
3	562698510001	Seal Kit	3	Chapter 2/01/22.01Chapter 2/02/23.01
4	562698510001	Seal Kit		Chapter 2/03/22.01
5	534798520026	Carbon Brush	1	Chapter 2/04/2
6	535998510013	Carbon Brush	1	Chapter 2/05/1
7	920200300001	Microswitch	5	Chapter 3/01/15Chapter 4/01/17
8	920200300001	Microswitch		Chapter 4/02/20Chapter 4/03/7Chapter
9	940500200007	Bushing	24	Chapter 3/02/14
10	940500200003	Bushing	2	Chapter 3/03/2 Chapter 5/03/2
11	940400100037	Air Spring	2	Chapter 3/03/17
12	940500100019	Bushing	2	Chapter 3/04/5
13	940500200008	Bushing	2	Chapter 3/04/6
14	940400100057	Air Spring	1	Chapter 3/04/7
15	535918020016	Spring	2	Chapter 3/04/23
16	534798510005	Seal Kit	2	Chapter 4/01/7.01
17	534798510002	Seal Kit	2	Chapter 4/02/12.01
18	534798510003	Seal Kit	1	Chapter 4/02/48.01
19	534798510004	Seal Kit	2	Chapter 4/03/17.01
20	534798510000	Seal Kit	2	Chapter 4/04/16.01
21	534798510001	Seal Kit	1	Chapter 4/04/58.01
22	940400100001	Air Spring	1	Chapter 5/01/13
23	940400100045	Air Spring	1	Chapter 5/01/13
24	502398510002	Wheel	4	Chapter 5/03/5
25	940300300005	WheelΦ80x70	4	Chapter 5/03/5.01
26	533298510003	Wheel	1	Chapter 5/04/10
27	940300300020	WheelΦ150x54	1	Chapter 5/04/10.01

1= Supply as package. 2= Supply with constraints. 3= Phasing-out supply. 4= Supply as assembly. 5= Check other tables.