Print Number: Print Date:

NOBLELIFT

Scan QR Code for More

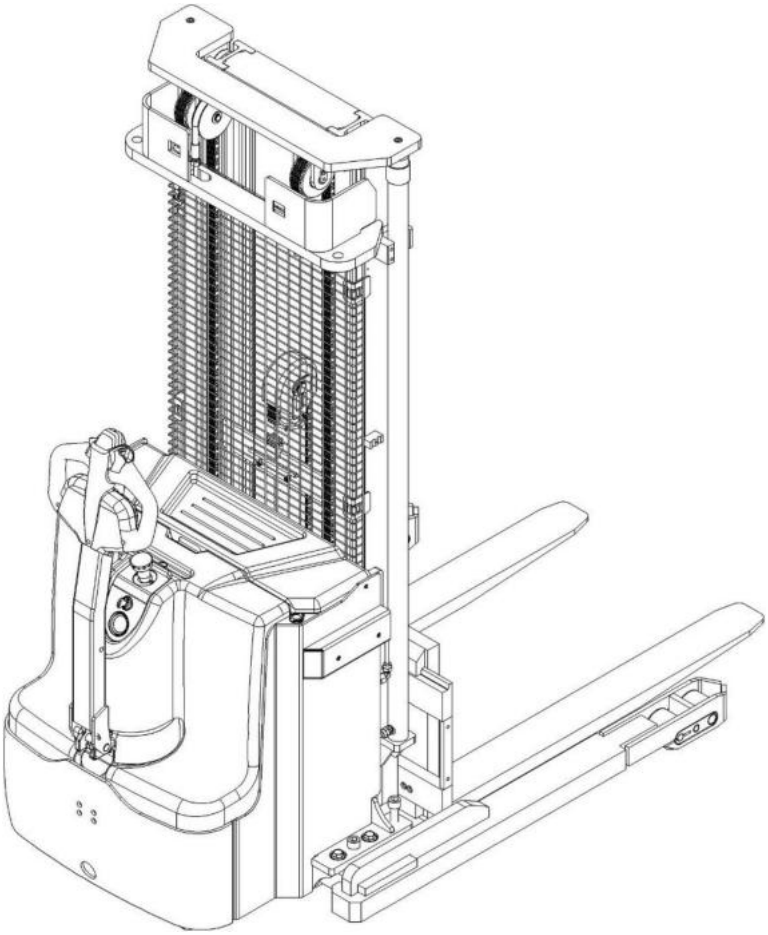

Electric Pallet Stacker PS18TSL

PARTS MANUAL

535146020101

Version: V03

Truck Identification Number From:

Parts Manual PS18TSL-PM03EN

Please order parts from authorized dealers of Noblelift Intelligent Equipment Co., LTD.

In order to avoid wrong delivery, all the orders for spare parts should specify the following items:

- Truck model, identification number and manufacture year.
- Orders for spare parts of mast, hydraulic transmission unit, steering axle, motor, etc. shall indicate the manufacture number of these parts.
- Codes for Noblelift spare parts are shown in the table of parts manual. Please also pay attention to the description of supply status, order quantity, etc. (check the number listed in "Mark" column of the parts manual).

"Mark" Column:

The unmarked indicates the parts are in short supply cycle.

Number 1: supply as package. Indicating these that parts are small parts and seal parts, which are supplied in package unit and in short supply cycle.

Number 2: supply with constraints. Indicating that these spare parts are not in stock and will be prepared for production after receiving the order from customers, which are in long supply cycle.

Number 3: phasing-out supply. Indicating that these parts will be replaced by new parts due to technical improvements and the current stock will not be available when these parts run out. Please check the description of technical improvements notice.

Number 4: supply as assembly. Indicating that these parts are assembly parts defined by manufacture process, which cannot be supplied as a single part.

Number 5: check other tables.

This parts manual is the property of Noblelift and can be shared under the confidential agreement only, Noblelift has the right to claim for compensation of any unauthorized use. Copy without permission is not allowed. Figures in the manual are not limited by the original design. Noblelift Intelligent Equipment Co., LTD reserves the right to improve the products for continuous technology progress.

Table of Contents

Chapter 1: Drive System 5
01 Drive Unit (534846013501) 5
02 Drive Assembly (535946013001) 7
Chapter 2: Hydraulic System 9
01 Hydraulic Components (Double Mast) (535146024001) 9
02 Hydraulic Components (Double Mast,Side-shift) (535146024002) 11
02Hydraulic Components (Double Mast,Side-shift) (535146024002)Continuation 13
02 Hydraulic Components (TX+FFL) (535146024003) 15
02 Hydraulic Components (TX+FFL,Side-shift) (535146024004) 17
02 Hydraulic Components (TX+FFL,Side-shift) (535146024004)Continuation 19
02 Hydraulic Components (TX) (535146024005) 21
03 Hydraulic Unit (534746023501) 23
04 Hydraulic Unit (534746023502) 25
Chapter 3: Truck Frame 27
01 Chassis (534846021501) 27
01 Chassis (534846021501)Continuation 29
02 Fork Carriage (535146038001) 31
Chapter 4: Mast System 33
01 Two-stage mast full free lift (535146043501) 33
01 Two-stage mast full free lift (535146043501)Continuation1 35
01 Two-stage mast full free lift (535146043501)Continuation2 37
02 Two-stage Mast Standard Lift (535146044001) 39
02 Two-stage Mast Standard Lift (535146044001)Continuation 41
03 Two-stage Mast Standard Lift (Side-shift) (535146044002) 43
03 Two-stage Mast Standard Lift (Side-shift) (535146044002)Continuation1 45
03 Two-stage Mast Standard Lift (Side-shift) (535146044002)Continuation2 47
04 Triple Mast Full Free Lift (535146044501) 49
04 Triple Mast Full Free Lift (535146044501)Continuation1 51
04 Triple Mast Full Free Lift (535146044501)Continuation2 53
05 Triple Mast Full Free Lift (Side-shift) (535146044502) 55
05 Triple Mast Full Free Lift (Side-shift) (535146044502)Continuation1 57
05 Triple Mast Full Free Lift (Side-shift) (535146044502)Continuation2 59
05 Triple Mast Full Free Lift (Side-shift) (535146044502)Continuation3 61
06 Triple Mast Standard Lift (535146045001) 63
06 Triple Mast Standard Lift (535146045001)Continuation 65
Chapter 5: Steering System, Braking System, Wheels 67
01 Tiller Unit (504446011001) 67
02 Tiller (505646010002) 69
03 Load Wheel(534746017001) 71
04 Caster(505646016501) 73
Chapter 6: Electrical Parts 75
01Wire Harness (534846033001) 75

02 Wire Harness (Side-shift) (534846033002)....77
03 Charger (534846036501)....79
04 Charger(Li) (534846036501)....81
05 Traction Battery (534746037001)....83
06 Traction Battery (Li) (534846037001)....85
07 Display Assembly (534846010001)....87
Chapter 7: Special Parts....89
01 Load Backrest (Optional) (534846040501)....89
02 Load Backrest (Side-shift,Optional) (216546040501)....91
03 Side-shifter (216546042501)....93
Chapter 8: Others....95
01 Label and Decal (EU) (535146047001)....95
02 Label and Decal (USA)(535146047002)....97
Appendix....99
01 Electrical Circuit Diagram (534846045501)....99
02 Electrical Circuit Diagram (Side-shift) (534846045502)....100
03 Electrical Circuit Diagram(Li) (534846045503)....101
04 Electrical Circuit Diagram (Side-shift,Li)(534846045504)....102
05 Hydraulic Circuit Diagram (534846045507)....103
06 Hydraulic Circuit Diagram (Side-shift) (534846045508)....104
07 Consumable Parts List....105

Chapter 1: Drive System

01 Drive Unit (534846013501)

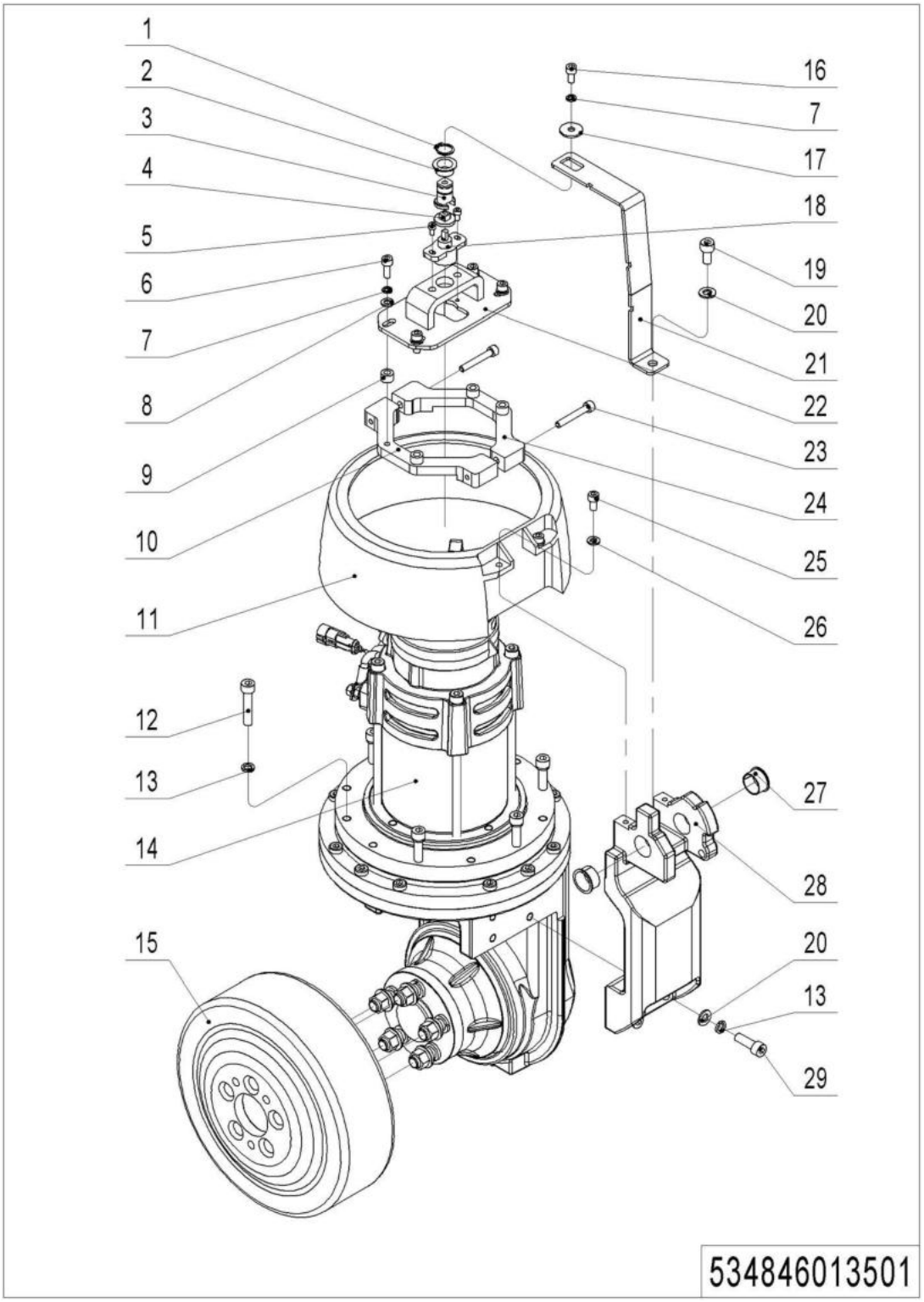

01 Drive Unit (534846013501)

No.	Item Code	Mark	Item Description	Qty.	Substitute	Note
1	910401300006	1	Circlip	1		
2	940500200001	1	Bushing	1		
3	534813520001	2	Pin	1		
4	505631520003	2	Link Block	1		
5	910200200012	1	Screw	2		
6	910200200038	1	Screw	4		
7	910400500005	1	Spring Washer	5		
8	910400100005	1	Flat Washer	4		
9	534813520010	2	Spacer Bush	4		
10	534813520002	2	Fixing Plate	1		
11	534713520003	2	Protective Cover	1		
12	910200200061	1	Screw	6		
13	910400500006	1	Spring Washer	10		
14	----------		Drive Assembly	1		Check535946013001
15	940300400005		WheelΦ230x70	1		
16	910200200033	1	Screw	1		
17	534813520008	2	Washer	1		
18	921800200006		Potentiometer	1		
19	910200200055	1	Screw	1		
20	910400100006	1	Flat Washer	5		
21	534813520009	2	Rod	1		
22	534813510001	2	Mounting Base	1		
23	910200200041	1	Screw	2		
24	534813520003	2	Fixing Plate	1		
25	910200300017	1	Screw	2		
26	910400100005	1	Flat Washer	2		
27	940500200005	1	Bushing	2		
28	534813520000	2	Bracket	1		
29	910200200058	1	Screw	4		

1= Supply as package. 2= Supply with constraints. 3= Phasing-out supply. 4= Supply as assembly. 5= Check other tables.

02 Drive Assembly (535946013001)

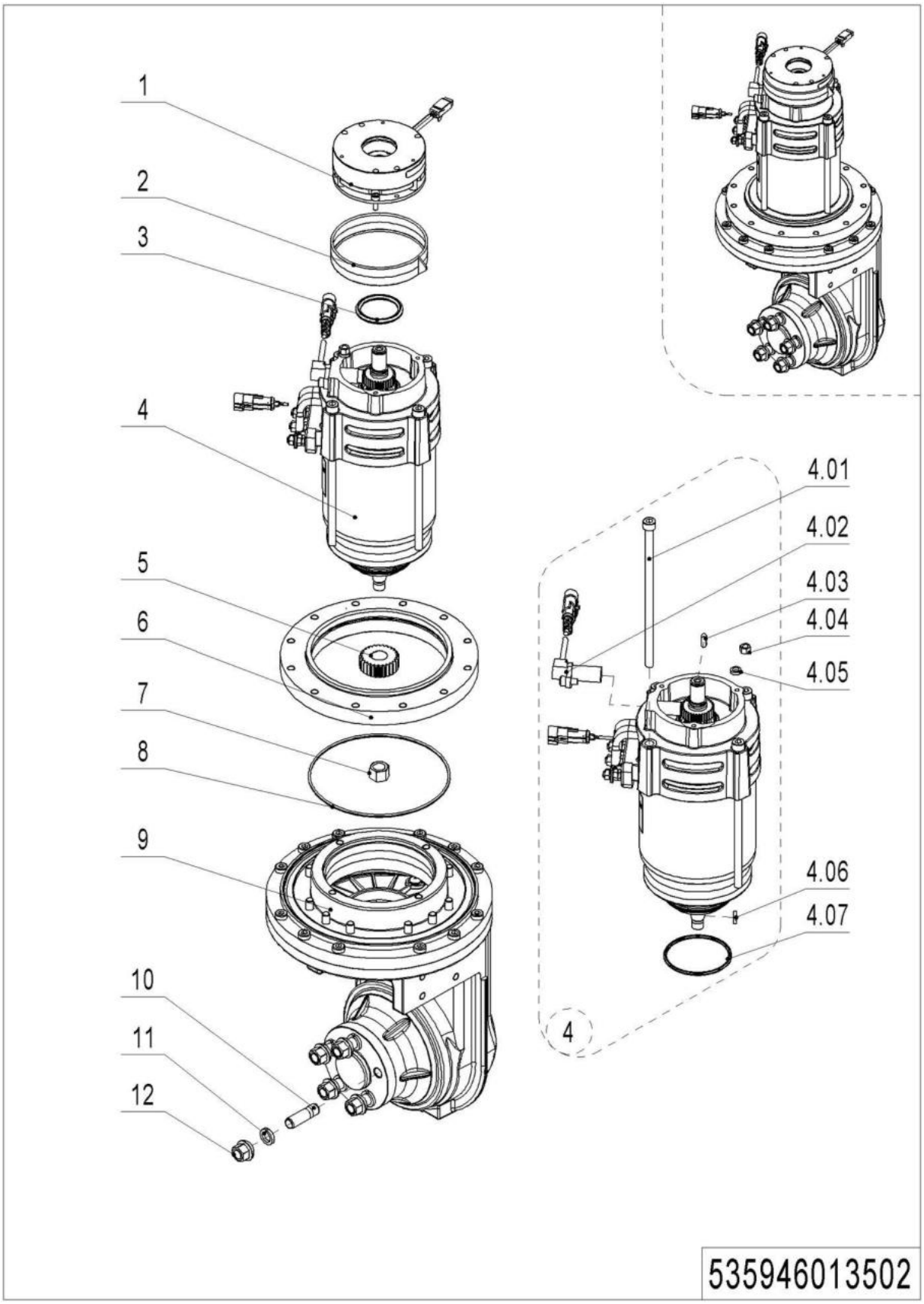

1= Supply as package. 2= Supply with constraints. 3= Phasing-out supply. 4= Supply as assembly. 5= Check other tables.

02 Drive Assembly (535946013001)

No.	Item Code	Mark	Item Description	Qty.	Substitute	Note
1	535998510001	2	Brake	1		
2	535998520001	2	Division Plate	1		
3	535998520000	2	Locating Ring	1		
4	535998510003	2	Motor	1		
4.01	535998520002	4	Screw	4		
4.02	535998510002	4	Sensor	1		
4.03	535998520005	4	Feather Key	1		
4.04	535998520003	4	Nut	1		
4.05	535998520004	4	Safety Element	1		
4.06	535998520006	4	Key	1		
4.07	535998520007	4	O-Ring	1		
5	535998520014	2	Gear	1		
6	535998520010	2	Plate	1		
7	535998520008	2	Nut	1		
8	535998520009	2	O-Ring	1		
9	535998510004	2	Gearbox Assembly	1		
10	535998520011	2	Bolt	5		
11	910400500008	2	Spring Washer	5		
12	535998520013	2	Nut	5		

1= Supply as package. 2= Supply with constraints. 3= Phasing-out supply. 4= Supply as assembly. 5= Check other tables.

Chapter 2: Hydraulic System

01 Hydraulic Components (Double Mast) (535146024001)

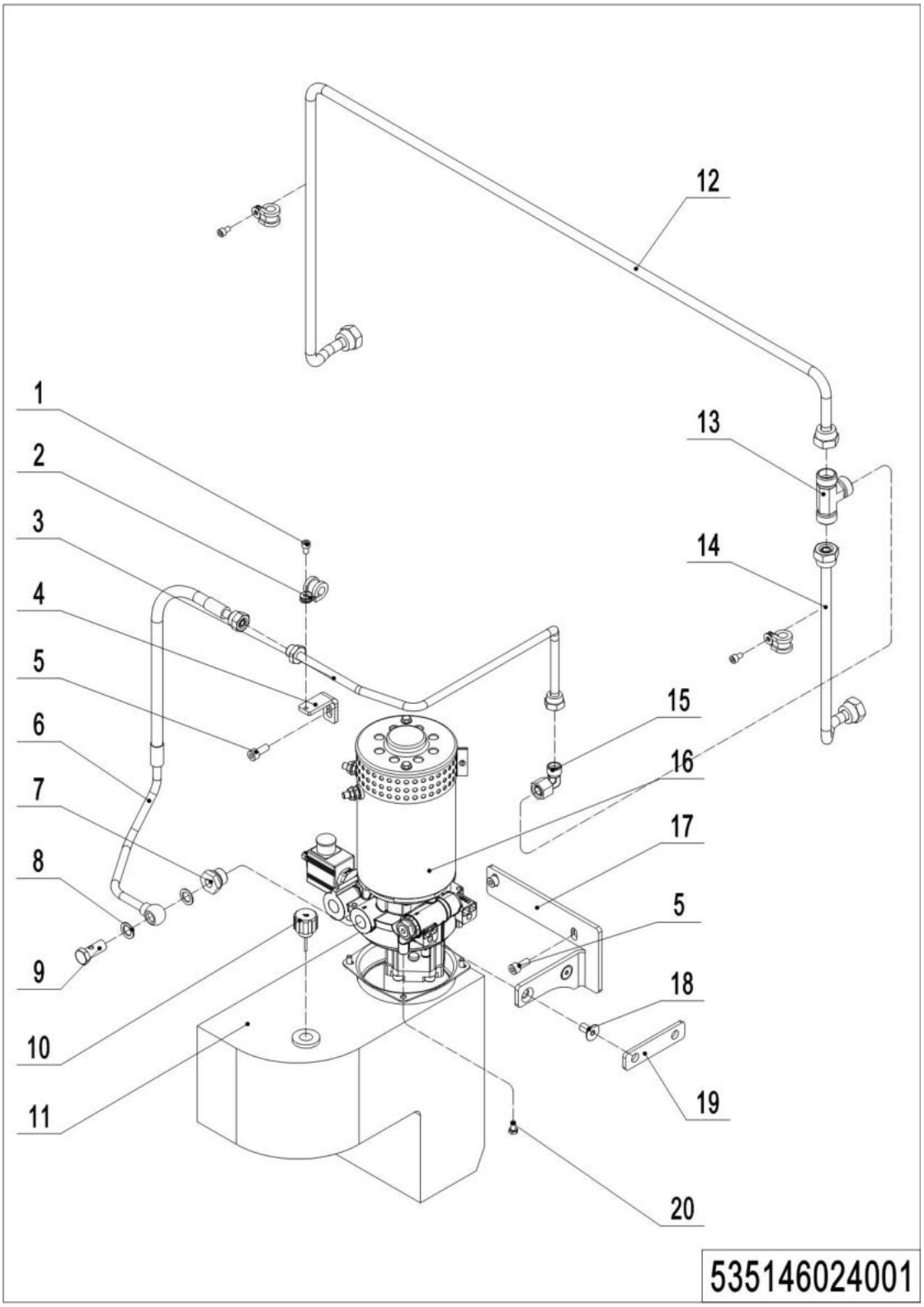

1= Supply as package. 2= Supply with constraints. 3= Phasing-out supply. 4= Supply as assembly. 5= Check other tables.

01 Hydraulic Components (Double Mast)(535146024001)

No.	Item Code	Mark	Item Description	Qty.	Substitute	Note
1	910200200035	1	Screw	3		
2	951000100001	1	Hose Clamp	3		
3	535124010004	2	Steel Tube	1		
4	534824020002	2	Fixing Plate	1		
5	910200200057	1	Screw	3		
6	534824010005	2	Hose	1		
7	950401200004		Joint	1		
8	910800900003	1	Bonded Washer	2		
9	911300300001		Hinge Bolt	1		
10	951100200001		Screw Plug	1		
11	534819010000	2	Tank	1		
12	535124010003	2	Steel Tube	1		
13	950400700002		Joint	1		
14	535024010002	2	Steel Tube	1		
15	950400200003		Joint	1		
16	----------		Hydraulic Unit	1		Check534746023501
16	----------		Hydraulic Unit	1		Check534746023502
17	534824020001	2	Fixing Plate	1		
18	910200400035	1	Screw	2		
19	534823520001		Subplate	1		Only VIBO
20	910100300009	1	Bolt	4		

02 Hydraulic Components (Double Mast,Side-shift) (535146024002)

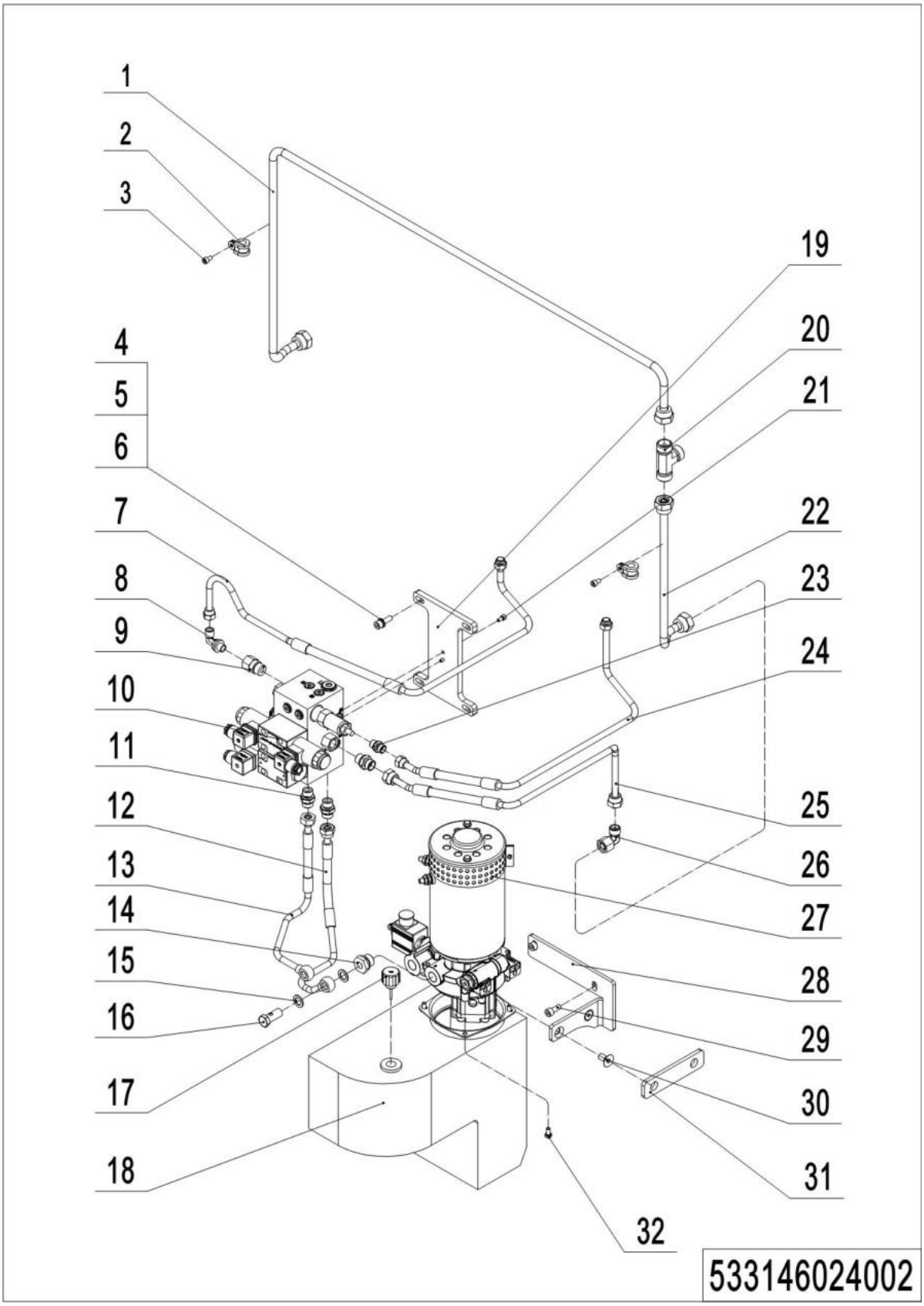

1= Supply as package. 2= Supply with constraints. 3= Phasing-out supply. 4= Supply as assembly. 5= Check other tables.

02 Hydraulic Components (Double Mast,Side-shift)(535146024002)

No.	Item Code	Mark	Item Description	Qty.	Substitute	Note
1	535124010003	2	Steel Tube	1		
2	951000100001	1	Hose Clamp	2		
3	910200200035	1	Screw	2		
4	910200200058	1	Screw	4		
5	910400100006	1	Flat Washer	4		
6	910400500006	1	Spring Washer	4		
7	535124010000	2	Hose	1		
8	950401100002		Joint	1		
9	950401200003		Joint	1		
10	950600100014		Hydraulic Valve	1		
11	950400300007		Joint	3		
12	534824010001	2	Hose	1		
13	534824010000	2	Hose	1		
14	950401200004		Joint	2		
15	910800900003	1	Bonded Washer	4		
16	911300300001		Hinge Bolt	2		
17	951100200001		Screw Plug	1		
18	534819010000	2	Tank	1		
19	534824020000	2	Mounting Plate	1		
20	950400700002		Joint	1		
21	910200200021	1	Screw	2		
22	535024010002	2	Steel Tube	1		
23	950400300004		Joint	1		
24	535124010001	2	Hose	1		
25	535124010002	2	Hose	1		
26	950400200003		Joint	1		
27	----------		Hydraulic Unit	1		Check534746023501
27	----------		Hydraulic Unit	1		Check534746023502
28	534824020001	2	Fixing Plate	1		

1= Supply as package. 2= Supply with constraints. 3= Phasing-out supply. 4= Supply as assembly. 5= Check other tables.

02Hydraulic Components (Double Mast,Side-shift) (535146024002)Continuation

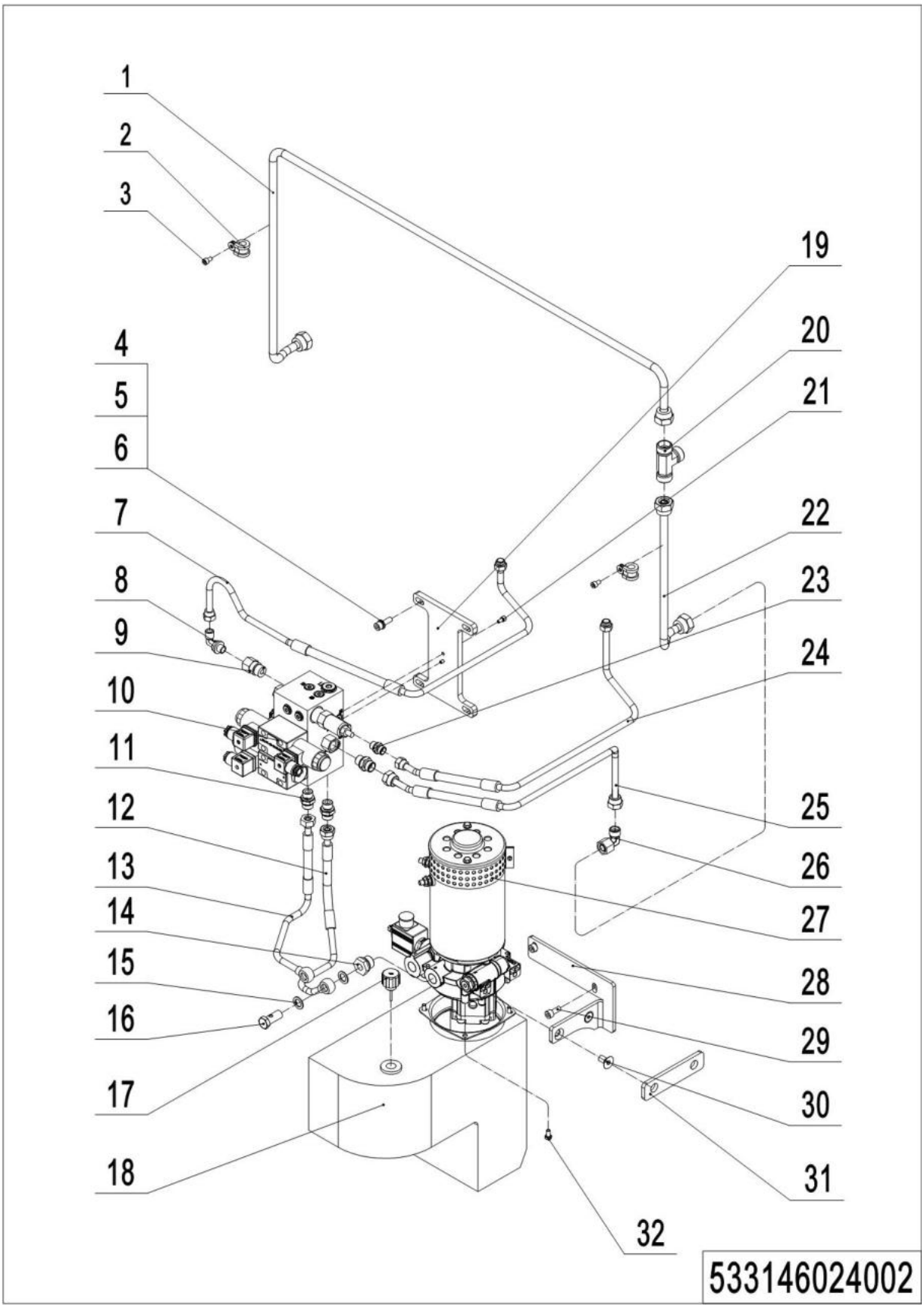

1= Supply as package. 2= Supply with constraints. 3= Phasing-out supply. 4= Supply as assembly. 5= Check other tables.

02 Hydraulic Components (Double Mast,Side-shift) (535146024002)Continuation

No.	Item Code	Mark	Item Description	Qty.	Substitute	Note
29	910200200057	1	Screw	2		
30	910200400035	1	Screw	2		
31	534823520001		Subplate	1		Only VIBO
32	910100300009	1	Bolt	4		

02 Hydraulic Components (TX+FFL) (535146024003)

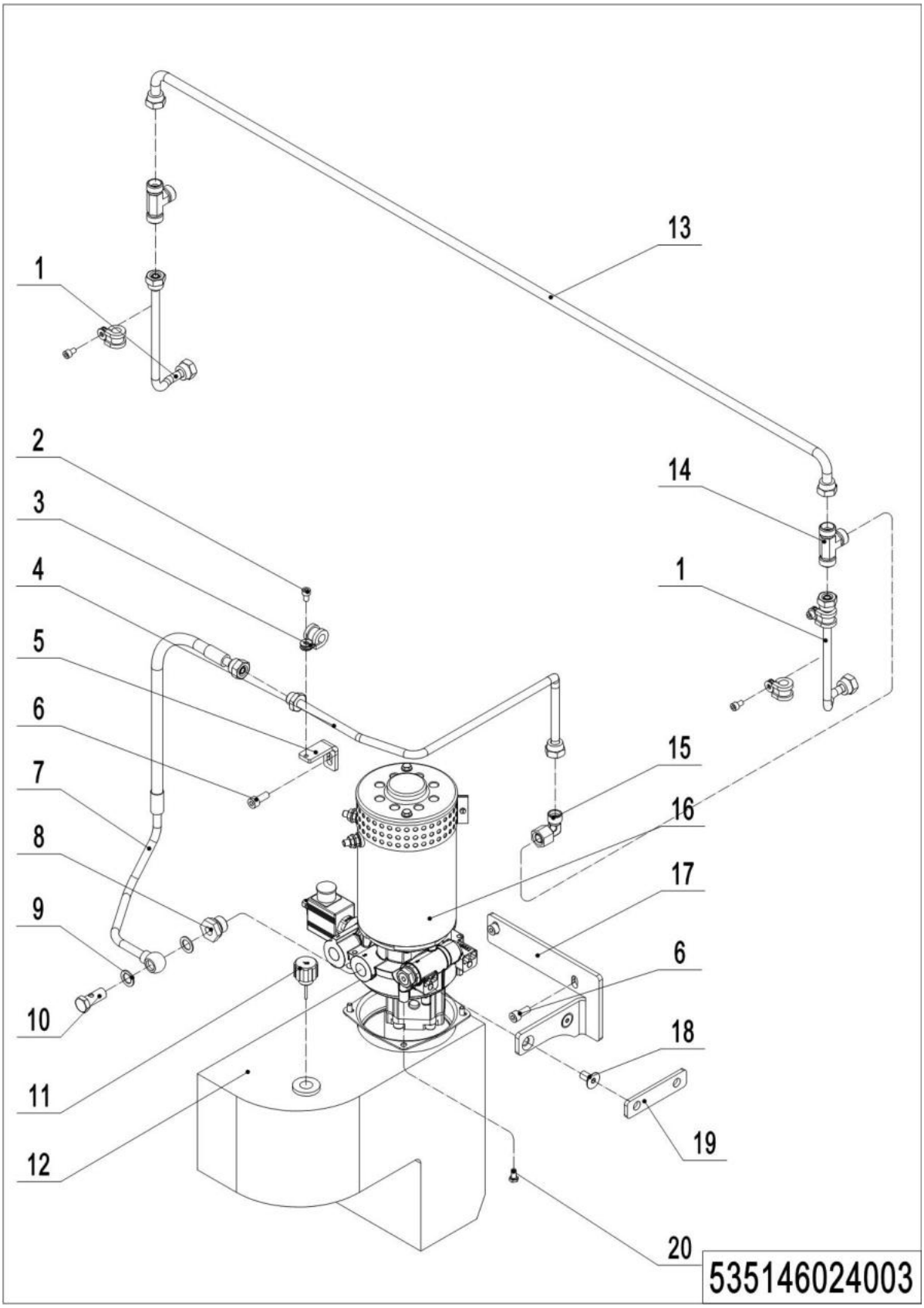

1= Supply as package. 2= Supply with constraints. 3= Phasing-out supply. 4= Supply as assembly. 5= Check other tables.

02 Hydraulic Components (TX+FFL)(535146024003)

No.	Item Code	Mark	Item Description	Qty.	Substitute	Note
1	535024010002	2	Steel Tube	2		
2	910200200035	1	Screw	3		
3	951000100001	1	Hose Clamp	3		
4	535124010004	2	Steel Tube	1		
5	534824020002	2	Fixing Plate	1		
6	910200200057	1	Screw	3		
7	534824010005	2	Hose	1		
8	950401200004		Joint	1		
9	910800900003	1	Bonded Washer	2		
10	911300300001		Hinge Bolt	1		
11	951100200001		Screw Plug	1		
12	534819010000	2	Tank	1		
13	535024010000	2	Steel Tube	1		
14	950400700002		Joint	2		
15	950400200003		Joint	1		
16	----------		Hydraulic Unit	1		Check534746023501
16	----------		Hydraulic Unit	1		Check534746023502
17	534824020001	2	Fixing Plate	1		
18	910200400035	1	Screw	2		
19	534823520001		Subplate	1		Only VIBO
20	910100300009	1	Bolt	4		

1= Supply as package. 2= Supply with constraints. 3= Phasing-out supply. 4= Supply as assembly. 5= Check other tables.

02 Hydraulic Components (TX+FFL,Side-shift) (535146024004)

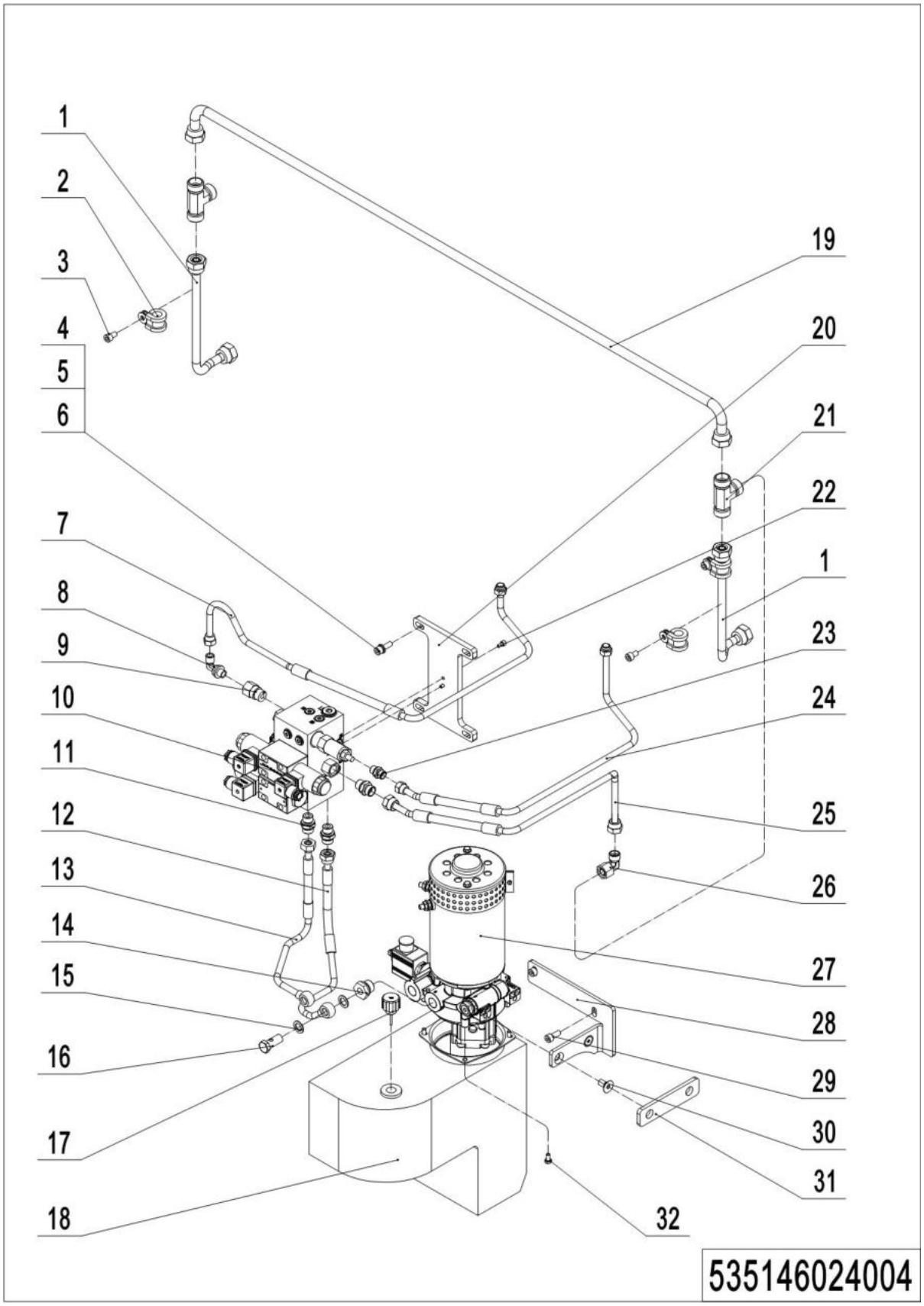

1= Supply as package. 2= Supply with constraints. 3= Phasing-out supply. 4= Supply as assembly. 5= Check other tables.

02 Hydraulic Components (TX+FFL,Side-shift)(535146024004)

No.	Item Code	Mark	Item Description	Qty.	Substitute	Note
1	535024010002	2	Steel Tube	2		
2	951000100001	1	Hose Clamp	2		
3	910200200035	1	Screw	2		
4	910200200058	1	Screw	4		
5	910400100006	1	Flat Washer	4		
6	910400500006	1	Spring Washer	4		
7	535124010000	2	Hose	1		
8	950401100002		Joint	1		
9	950401200003		Joint	1		
10	950600100014		Hydraulic Valve	1		
11	950400300007		Joint	3		
12	534824010001	2	Hose	1		
13	534824010000	2	Hose	1		
14	950401200004		Joint	2		
15	910800900003	1	Bonded Washer	4		
16	911300300001		Hinge Bolt	2		
17	951100200001		Screw Plug	1		
18	534819010000	2	Tank	1		
19	535024010000	2	Steel Tube	1		
20	534824020000	2	Mounting Plate	1		
21	950400700002		Joint	2		
22	910200200021	1	Screw	2		
23	950400300004		Joint	1		
24	535124010001	2	Hose	1		
25	535124010002	2	Hose	1		
26	950400200003		Joint	1		
27	----------		Hydraulic Unit	1		Check534746023501
27	----------		Hydraulic Unit	1		Check534746023502
28	534824020001	2	Fixing Plate	1		

1= Supply as package. 2= Supply with constraints. 3= Phasing-out supply. 4= Supply as assembly. 5= Check other tables.

02 Hydraulic Components (TX+FFL,Side-shift) (535146024004)Continuation

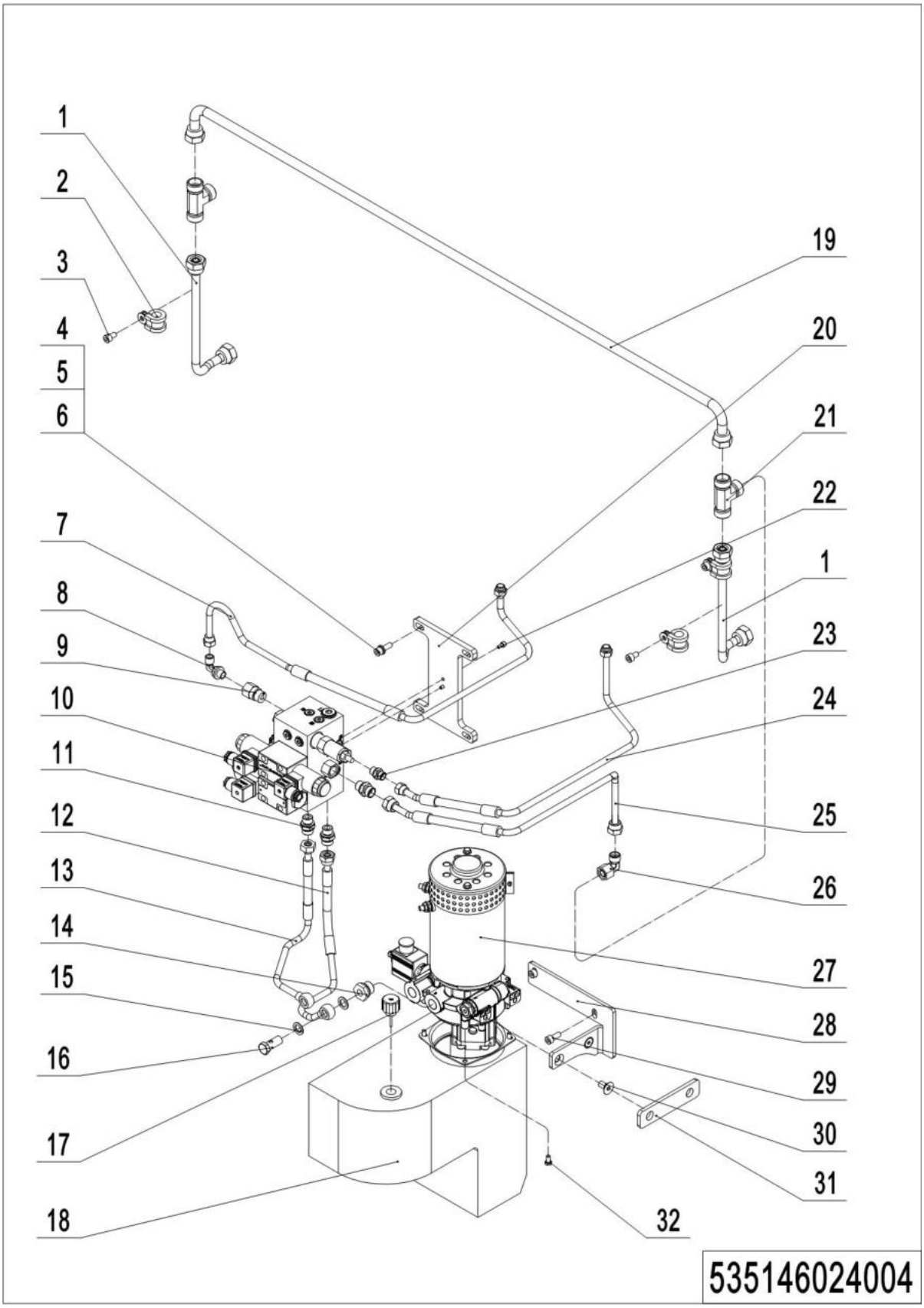

1= Supply as package. 2= Supply with constraints. 3= Phasing-out supply. 4= Supply as assembly. 5= Check other tables.

02 Hydraulic Components (TX+FFL,Side-shift) (535146024004)Continuation

No.	Item Code	Mark	Item Description	Qty.	Substitute	Note
29	910200200057	1	Screw	2		
30	910200400035	1	Screw	2		
31	534823520001		Subplate	1		Only VIBO
32	910100300009	1	Bolt	4		

02 Hydraulic Components (TX) (535146024005)

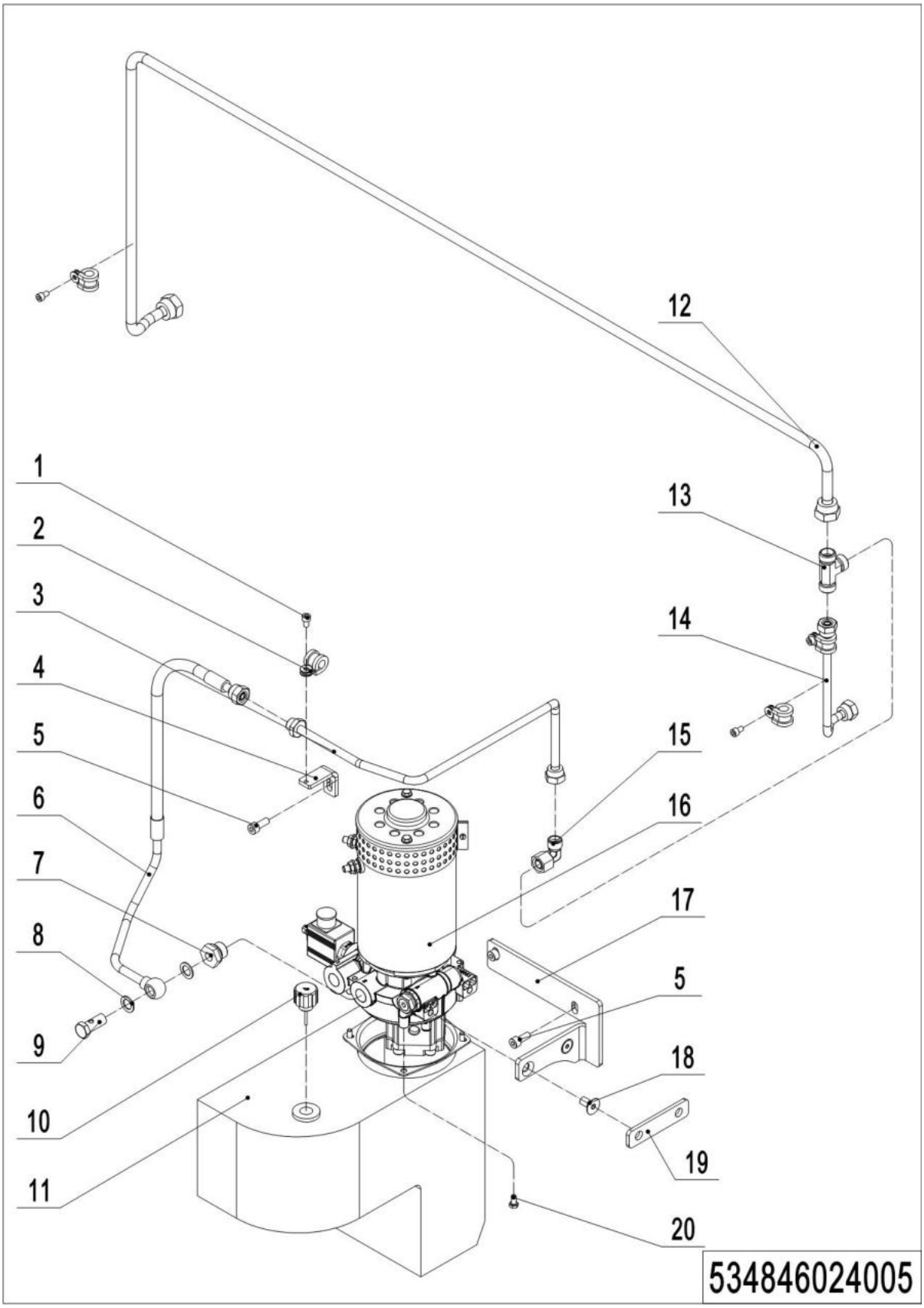

1= Supply as package. 2= Supply with constraints. 3= Phasing-out supply. 4= Supply as assembly. 5= Check other tables.

02 Hydraulic Components (TX)(535146024005)

No.	Item Code	Mark	Item Description	Qty.	Substitute	Note
1	910200200035	1	Screw	3		
2	951000100001	1	Hose Clamp	3		
3	535124010004	2	Steel Tube	1		
4	534824020002	2	Fixing Plate	1		
5	910200200057	1	Screw	3		
6	534824010005	2	Hose	1		
7	950401200004		Joint	1		
8	910800900003	1	Bonded Washer	2		
9	911300300001		Hinge Bolt	1		
10	951100200001		Screw Plug	1		
11	534819010000	2	Tank	1		
12	535124010003	2	Steel Tube	1		
13	950400700002		Joint	1		
14	535024010002	2	Steel Tube	1		
15	950400200003		Joint	1		
16	----------		Hydraulic Unit	1		Check534746023501
16	----------		Hydraulic Unit	1		Check534746023502
17	534824020001	2	Fixing Plate	1		
18	910200400035	1	Screw	2		
19	534823520001		Subplate	1		Only VIBO
20	910100300009	1	Bolt	4		

03 Hydraulic Unit (534746023501)

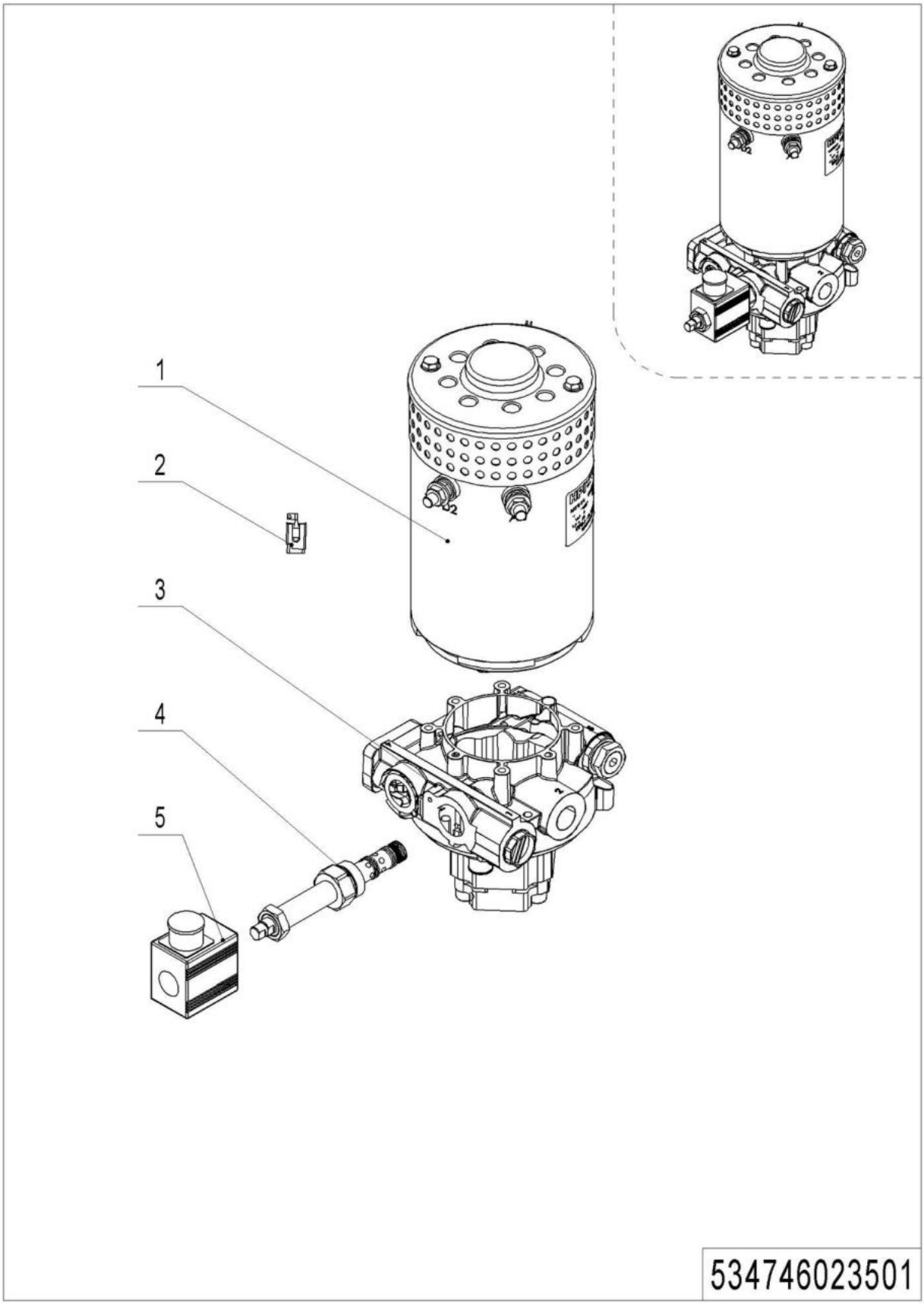

1= Supply as package. 2= Supply with constraints. 3= Phasing-out supply. 4= Supply as assembly. 5= Check other tables.

03 Hydraulic Unit(534746023501)

No.	Item Code	Mark	Item Description	Qty.	Substitute	Note
--	950900100015		Pump Unit	1		HPI 3.2KW
1	534798510006	2	Motor	1		
2	534798520026	2	Carbon Brush	1		
3	534798510007	2	Valve Block	1		
4	534798520024	2	Magnetic Valve	1		
5	534798520025	2	Coil	1		

04 Hydraulic Unit (534746023502)

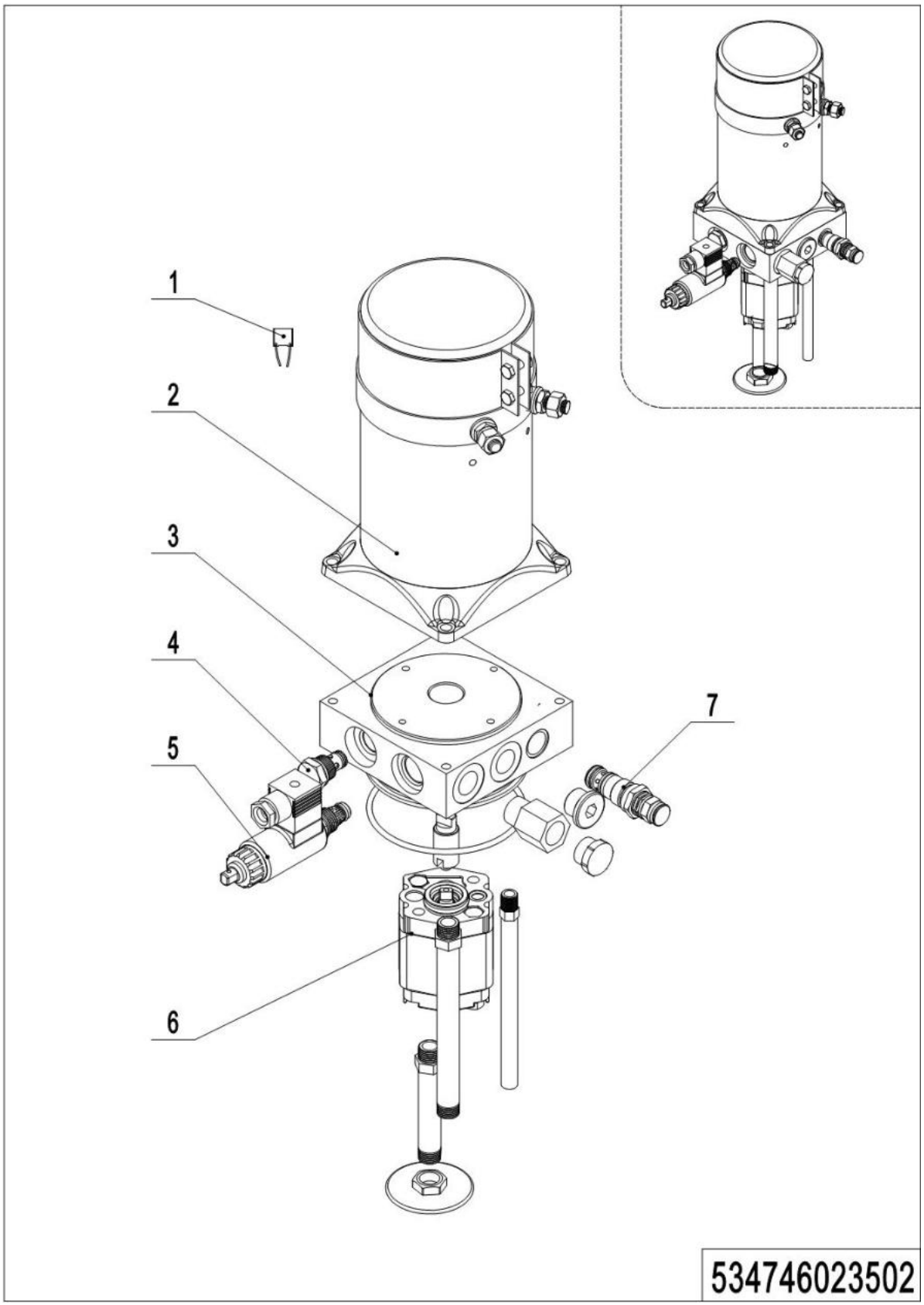

1= Supply as package. 2= Supply with constraints. 3= Phasing-out supply. 4= Supply as assembly. 5= Check other tables.

04 Hydraulic Unit(534746023502)

No.	Item Code	Mark	Item Description	Qty.	Substitute	Note
--	950900100098		Pump Unite	1		VIBO,3.2KW
1	535998510013	2	Carbon Brush	1		
2	534798510012	2	Motor	1		
3	534798510013	2	Valve Block	1		
4	532098510003	2	Check Valve	1		
5	534798510014	2	Magnetic Valve	1		
6	534798510015	2	Gear Pump	1		
7	402698520018	2	Overflow Valve	1		

Chapter 3: Truck Frame

01 Chassis (534846021501)

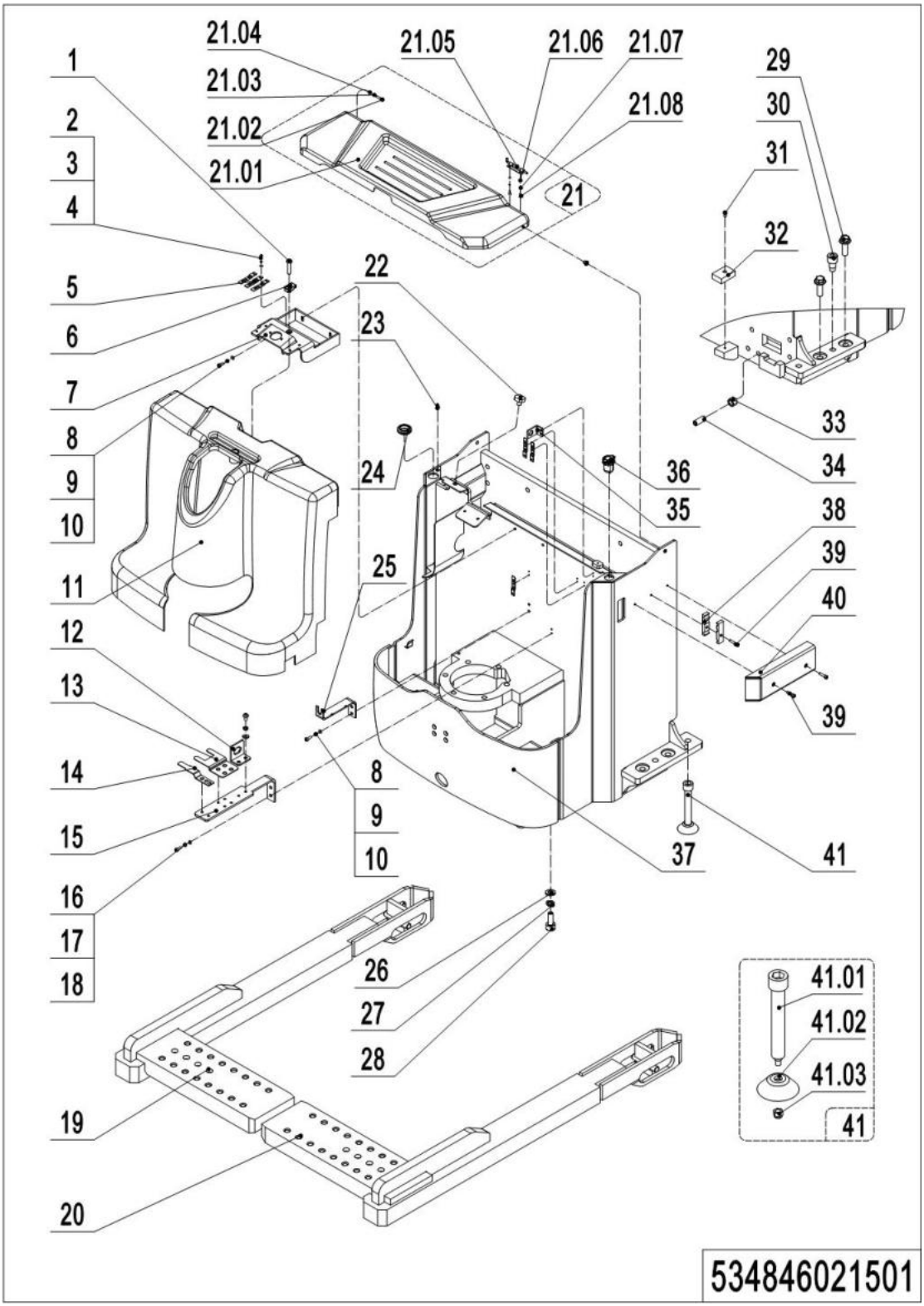

01 Chassis(534846021501)

No.	Item Code	Mark	Item Description	Qty.	Substitute	Note
1	941100100006	1	Screw	1		
2	910400100003	1	Flat Washer	22		
3	910400500003	1	Spring Washer	22		
4	910200500034	1	Screw	22		
5	921300300005	1	Holder	6		
6	940400400003	1	Cage Nut	3		
7	534821510001	2	Mounting Plate	1		
8	910200200055	1	Screw	4		
9	910400500006	1	Spring Washer	4		
10	910400100006	1	Flat Washer	4		
11	505021520003	2	Protective Cover	1		
12	921300300003	1	Holder	1		
13	921300300015		Holder	1		
14	921300300010	1	Connector Holder	1		
15	534821520031	2	Mounting Plate	1		
16	910400100004	1	Flat Washer	2		
17	910400500004	1	Spring Washer	2		
18	910200200022	1	Screw	2		
19	534821510003	2	Leg(left)	1		
20	534821510002	2	Leg(right)	1		
21	534821001000	2	Cell Cover	1		
21.01	534821010000	2	Cell Cover	1		
21.02	910200200024	1	Screw	1		
21.03	910400500004	1	Spring Washer	1		
21.04	910400100004	1	Flat Washer	1		
21.05	940800900001		Lock Pin	1		
21.06	910400100003	1	Flat Washer	2		
21.07	910400500003	1	Spring Washer	2		
21.08	910200200013	1	Screw	2		

01 Chassis (534846021501)Continuation

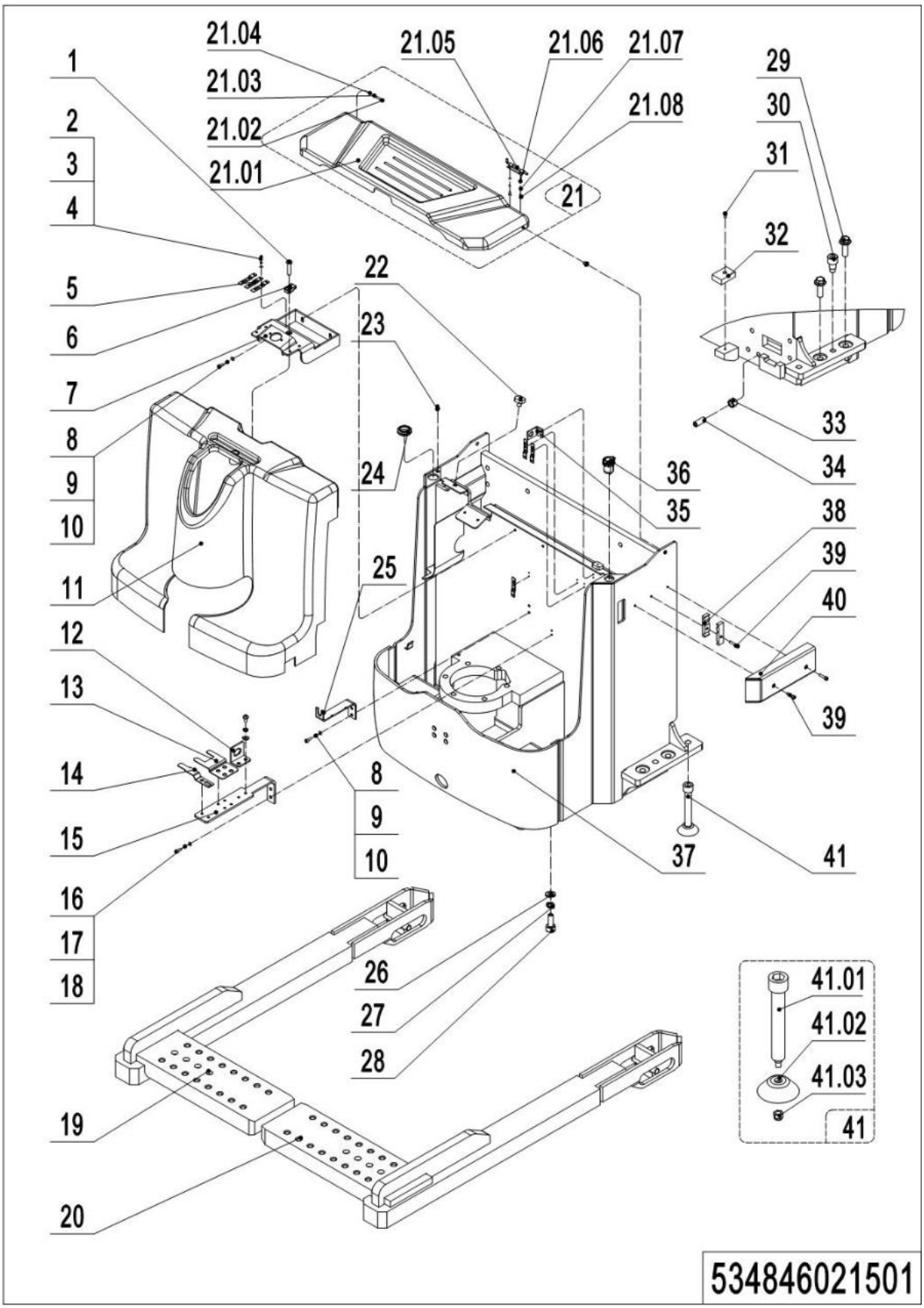

01 Chassis(534846021501)Continuation

No.	Item Code	Mark	Item Description	Qty.	Substitute	Note
22	505938520016		Crash Pad	2		
23	922000100024	1	Lamp Holder	1		
24	505621520036		Jacket	1		
25	534721520025	2	Fixing Mount	1		
26	910400100007	1	Flat Washer	16		
27	910400500007	1	Spring Washer	16		
28	910200200076	1	Screw	8		
29	910100800006	1	Bolt	12		
30	532621520047	2	Locating Pin	2		
31	910200300017	1	Screw	2		
32	534721520024		Crash Pad	2		
33	910300100010	1	Nut	6		
34	910200800042	1	Screw	6		
35	921300300002	1	Holder	1		
36	206033010036		USB interface	1		
37	534821510000	2	Chassis	1		
38	534821520050	2	Fixing Plate	2		
39	910200200039	1	Screw	3		
40	534821510004	2	Protective Cover	1		
41	532621510013	2	Support Leg Kit	2		
41.01	532621520029	1	Screw	1		
41.02	532621520030	2	Support Leg	1		
41.03	910300500004	1	Nut	1		

02 Fork Carriage (535146038001)

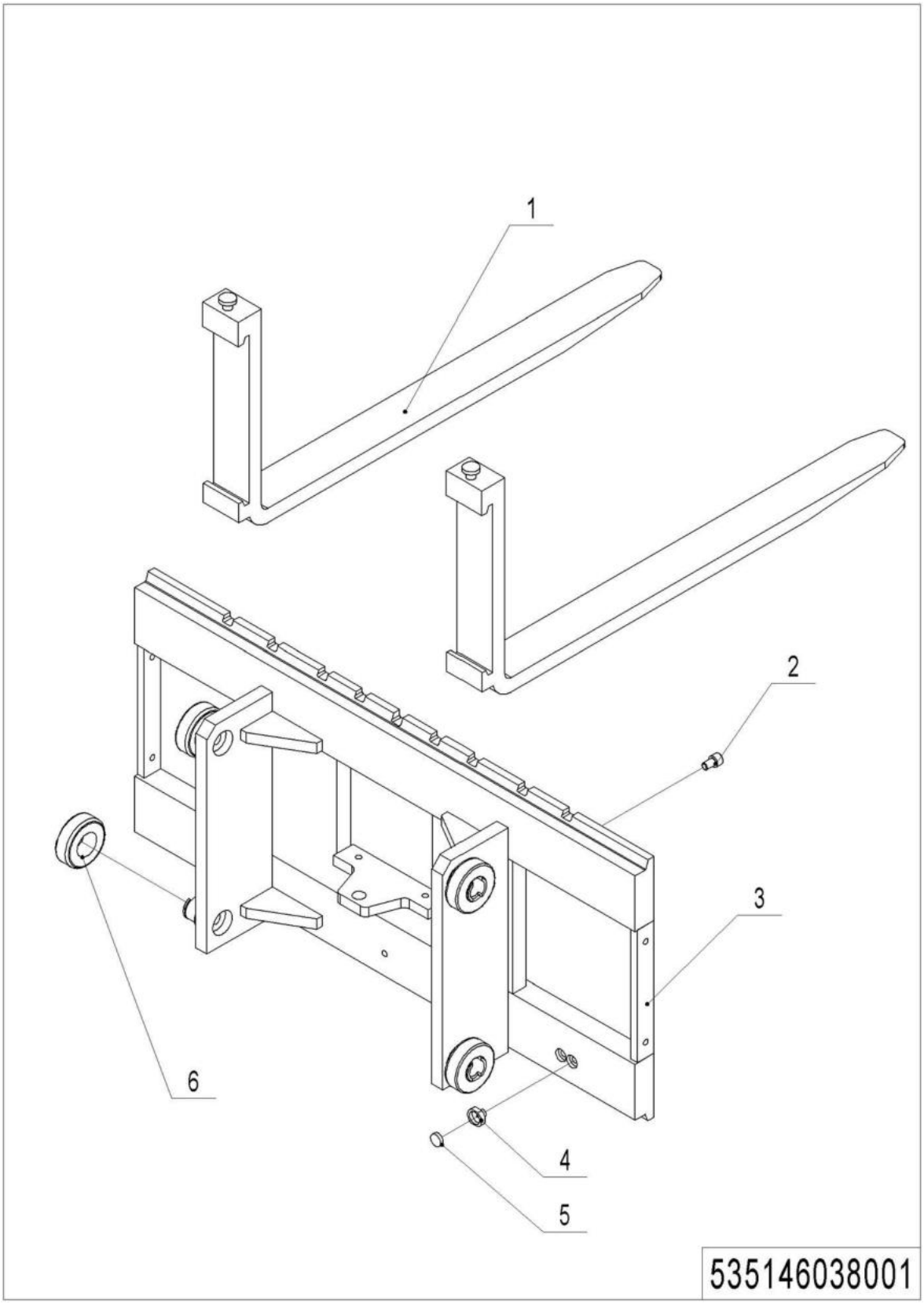

1= Supply as package. 2= Supply with constraints. 3= Phasing-out supply. 4= Supply as assembly. 5= Check other tables.

02 Fork Carriage(535146038001)

No.	Item Code	Mark	Item Description	Qty.	Substitute	Note
1	940100100010		Fork120x40x1150	2		
2	910200200074		Screw	3		
3	535138010000	2	Fork Bracket	1		Two-stage mast
3	535138010001	2	Fork Bracket	1		Triple mast
4	940600200001		Mounting Base	1		
5	940600100001		Magnetic Steel	1		
6	940200300020		Compound Roller	4		

Chapter 4: Mast System

01 Two-stage mast full free lift (535146043501)

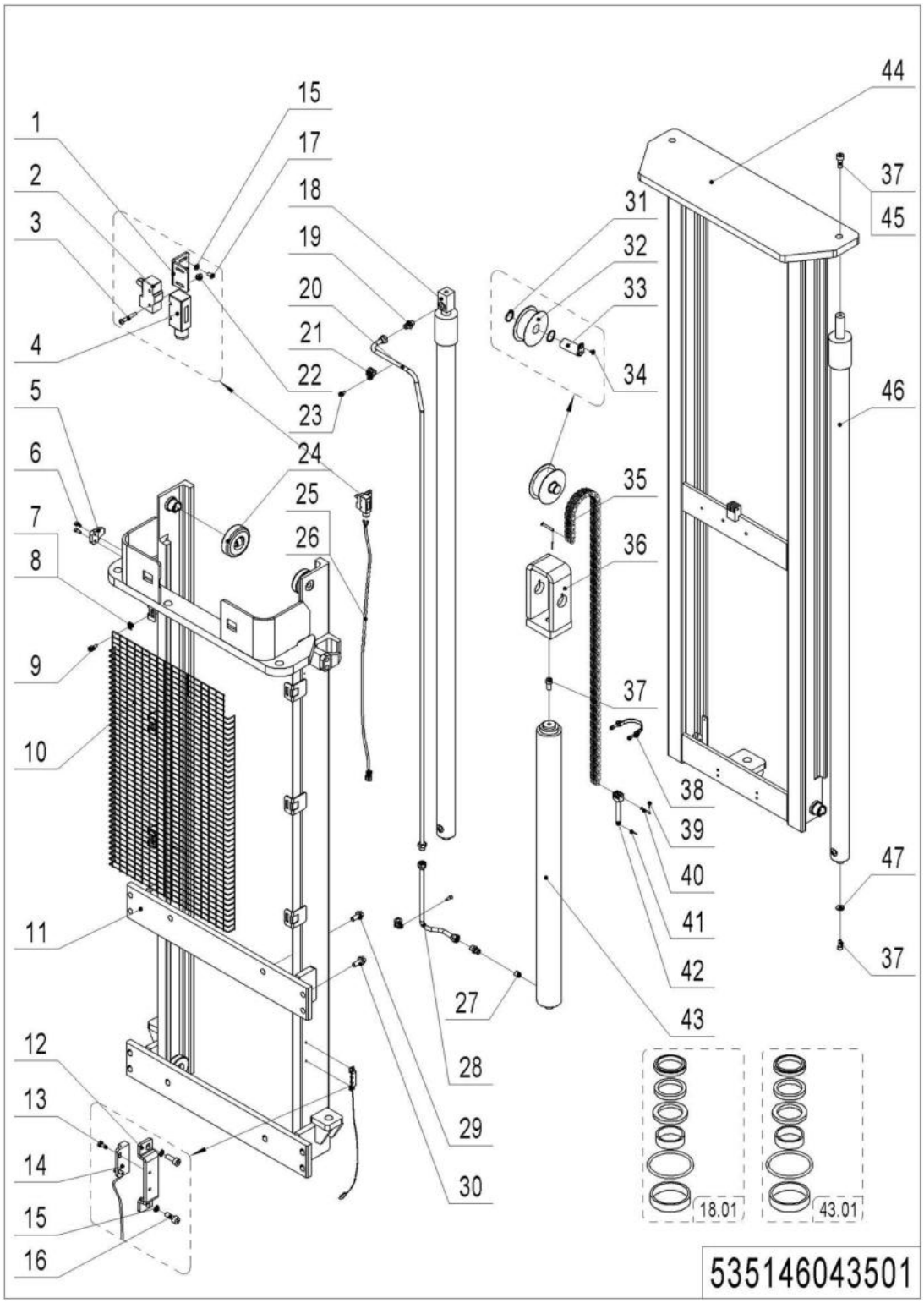

01 Two-stage mast full free lift(535146043501)

No.	Item Code	Mark	Item Description	Qty.	Substitute	Note
1	534744520036	2	Fixing Plate	1		
2	920200300001		Microswitch	1		
3	910200500028	1	Screw	2		
4	920200300008		Protective Cover	1		
5	275044020076		Fixing Plate	2		
6	910200200057	1	Screw	4		
7	940801500001	1	Cage Nut	6		
8	320443020321	1	Press Plate	6		
9	910200200038	1	Screw	6		
10	535044020025	2	Protective Frame	1		2700
10	535044020024	2	Protective Frame	1		2900
10	535044020021	2	Protective Frame	1		3200
10	535044020023	2	Protective Frame	1		3600
11	535143510003	2	Outer Mast(2700)	1		
11	535143510002	2	Outer Mast(2900)	1		
11	535143510001	2	Outer Mast(3200)	1		
11	535143510000	2	Outer Mast(3600)	1		
12	534744520059	2	Protective Cover	1		
13	910200500010	1	Screw	2		
14	534833510003		Switch	1		
15	910400100003	1	Flat Washer	4		
16	910200200015	1	Screw	2		
17	910200300005	1	Screw	2		
18	535043510003	2	Cylinder	1		2700
18	535043510002	2	Cylinder	1		2900
18	535043510001	2	Cylinder	1		3200
18	535043510000	2	Cylinder	1		3600
18.01	535098510002	1	Seal Kit	2		Also for cylinder47
19	950400400003		Joint	3		

01 Two-stage mast full free lift (535146043501)Continuation1

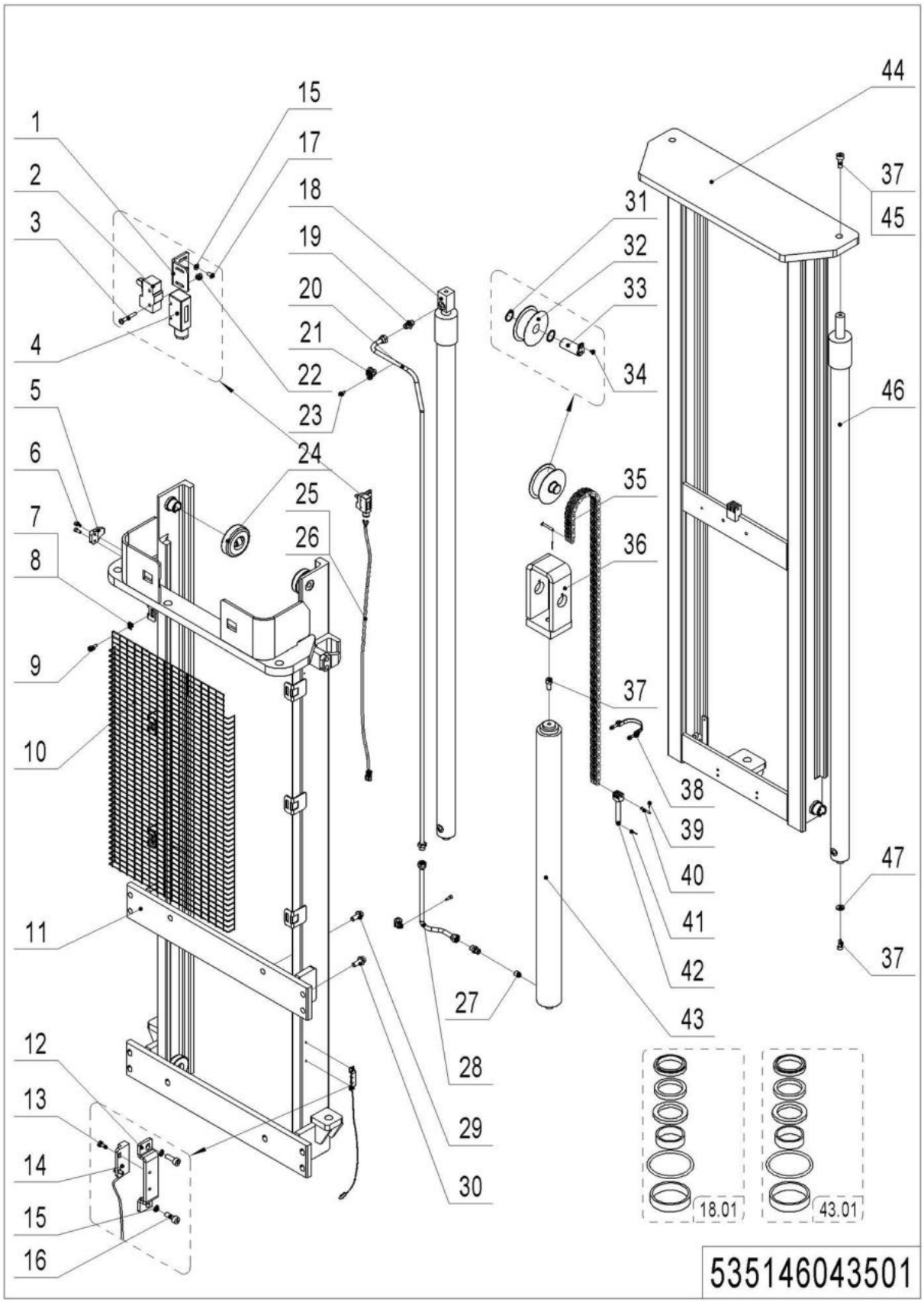

01 Two-stage mast full free lift (535146043501)Continuation1

No.	Item Code	Mark	Item Description	Qty.	Substitute	Note
20	535043510035	2	Steel Tube	1		
21	951000100001	1	Hose Clamp	2		
22	910300500001	1	Nut	2		
23	910200200035	1	Screw	2		
24	940200300004		Compound Roller	4		
25	534833510001	2	Wire Harness	1		2700
25	534733010015	2	Wire Harness	1		2900
25	535133510001	2	Wire Harness	1		3200
25	535133510002	2	Wire Harness	1		3600
26	921600400003	1	Cable Tie	5		
27	950600300001		Safety Valve	2		
28	535043510011	2	Steel Tube	1		2700
28	535043510010	2	Steel Tube	1		2900
28	535043510009	2	Steel Tube	1		3200
28	535043510008	2	Steel Tube	1		3600
29	910100800005	1	Bolt	4		
30	910100800006	1	Bolt	8		
31	940600500008	1	Washer	6		
32	940200500011		Sprocket Bearing	1		
33	535045010008		Pin	1		
34	910200400016	1	Screw	1		
35	535043510025	2	Chain	1		2700
35	535043510024	2	Chain	1		2900
35	535043510023	2	Chain	1		3200
35	535043510022	2	Chain	1		3600
36	535043510034		Yoke	1		
37	910200200097	1	Screw	5		
38	940800600002		Hoop	1		
39	910600600015	1	Cotter Pin	2		

1= Supply as package. 2= Supply with constraints. 3= Phasing-out supply. 4= Supply as assembly. 5= Check other tables.

01 Two-stage mast full free lift (535146043501)Continuation2

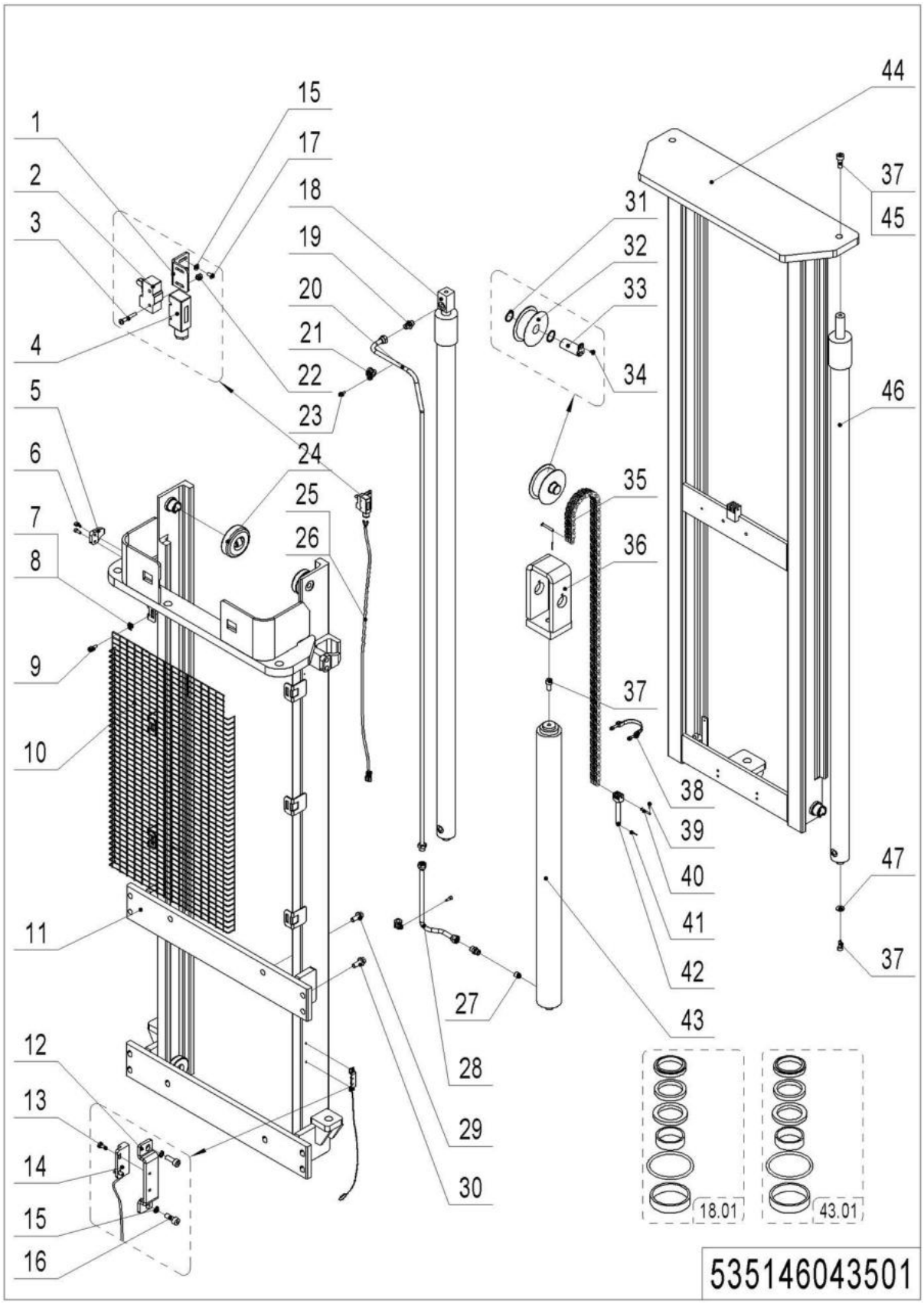

01 Two-stage mast full free lift (535146043501)Continuation2

No.	Item Code	Mark	Item Description	Qty.	Substitute	Note
40	941100800009	1	Pin	2		
41	910600600032	1	Cotter Pin	1		
42	535045020024		Chain Anchor	1		
43	535043510012	2	Cylinder	1		2700
43	534743510011	2	Cylinder	1		2900
43	534743510010	2	Cylinder	1		3200
43	534743510009	2	Cylinder	1		3600
43.01	534798510003	1	Seal Kit	1		
44	535043510033	2	Inner Mast(2700)	1		
44	535043510032	2	Inner Mast(2900)	1		
44	535043510031	2	Inner Mast(3200)	1		
44	535043510030	2	Inner Mast(3600)	1		
45	910400500008	1	Spring Washer	2		
46	535043510007	2	Cylinder	1		2700
46	535043510006	2	Cylinder	1		2900
46	535043510005	2	Cylinder	1		3200
46	535043510004	2	Cylinder	1		3600
47	534744520015		Subplate	2		

02 Two-stage Mast Standard Lift (535146044001)

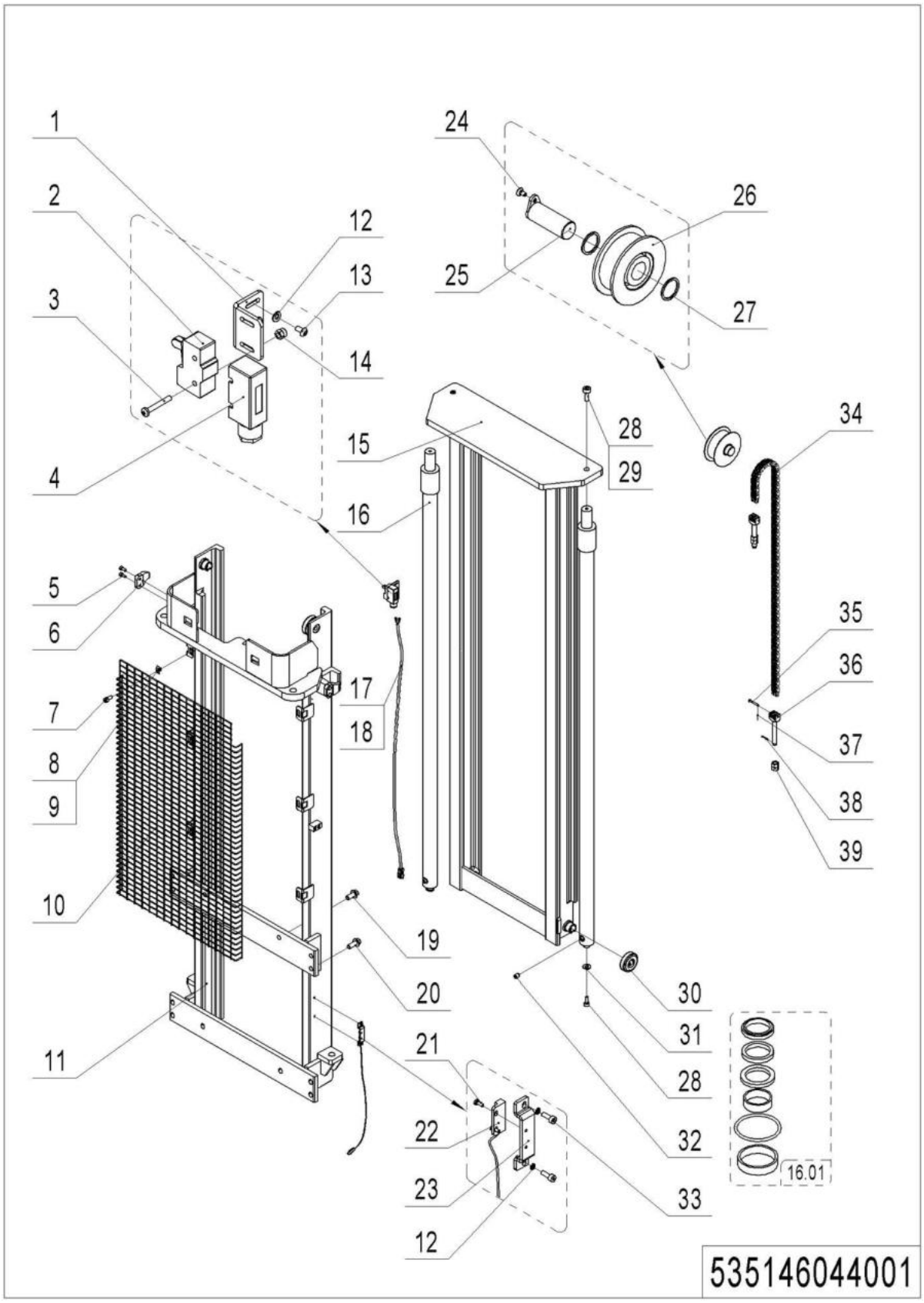

02 Two-stage Mast Standard Lift(535146044001)

No.	Item Code	Mark	Item Description	Qty.	Substitute	Note
1	534744520036	2	Fixing Plate	1		
2	920200300001		Microswitch	1		
3	910200500028	1	Screw	2		
4	920200300008		Protective Cover	1		
5	910200200057	1	Screw	4		
6	275044020076		Fixing Plate	2		
7	910200200038	1	Screw	4		
8	940801500001	1	Cage Nut	6		
9	320443020321	1	Press Plate	6		
10	535044020024	2	Protective Frame	1		2900
10	535044020021	2	Protective Frame	1		3200
10	535044020023	2	Protective Frame	1		3600
11	535144010010	2	Outer Mast(2900)	1		
11	535144010006	2	Outer Mast(3200)	1		
11	535144010000	2	Outer Mast(3600)	1		
12	910400100003	1	Flat Washer	4		
13	910200300005	1	Screw	2		
14	910300500001	1	Nut	2		
15	535044010017	2	Inner Mast(2900)	1		
15	535044010016	2	Inner Mast(3200)	1		
15	535044010015	2	Inner Mast(3600)	1		
16	535044010008	2	Cylinder	2		2900
16	535044010007	2	Cylinder	2		3200
16	535044010006	2	Cylinder	2		3600
16.01	535098510003	1	Seal Kit	2		
17	921600400003	1	Cable Tie	5		
18	534733010015	2	Wire Harness	1		2900
18	535133510001	2	Wire Harness	1		3200
18	535133510002	2	Wire Harness	1		3600

02 Two-stage Mast Standard Lift (535146044001)Continuation

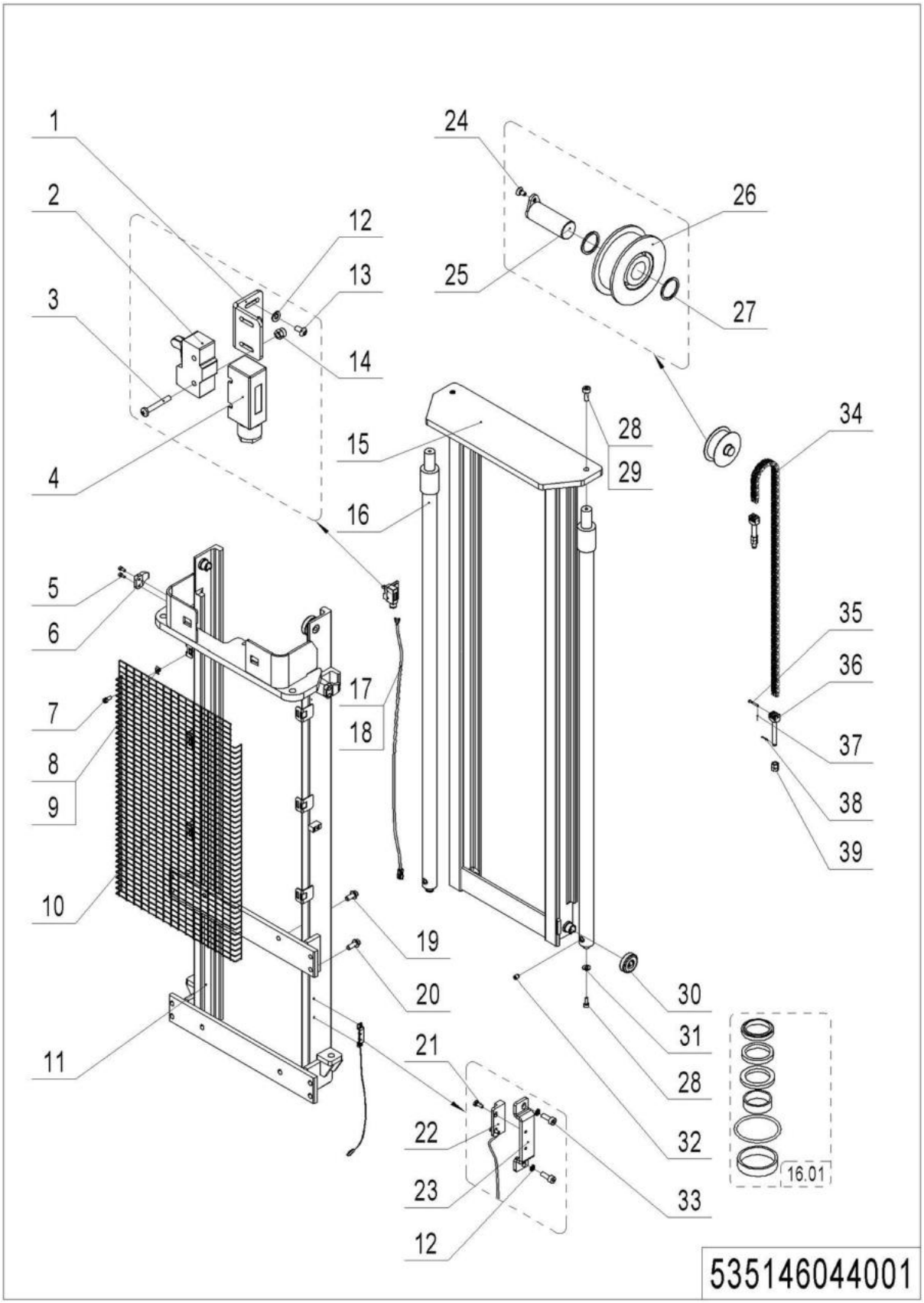

02Two-stage Mast Standard Lift(535146044001)Continuation

No.	Item Code	Mark	Item Description	Qty.	Substitute	Note
19	910100800005	1	Bolt	4		
20	910100800006	1	Bolt	8		
21	910200500010	1	Screw	2		
22	534833510003		Switch	1		
23	534744520059	2	Protective Cover	1		
24	910200400016	1	Screw	1		
25	535045010008		Pin	1		
26	940200500011		Sprocket Bearing	1		
27	940600500008	1	Washer	4		
28	910200200097	1	Screw	4		
29	910400500008	1	Spring Washer	2		
30	940200300022		Compound Roller	4		
31	534744520015		Subplate	2		
32	950600300001		Safety Valve	2		
33	910200200015	1	Screw	2		
34	535045010009	2	Chain	1		2900
34	535144010014	2	Chain	1		3200
34	535144010015	2	Chain	1		3600
35	941100800009	1	Pin	2		
36	535045020024		Chain Anchor	2		
37	910600600015	1	Cotter Pin	2		
38	910600600023	1	Cotter Pin	2		
39	910300200008	1	Nut	4		

03 Two-stage Mast Standard Lift (Side-shift) (535146044002)

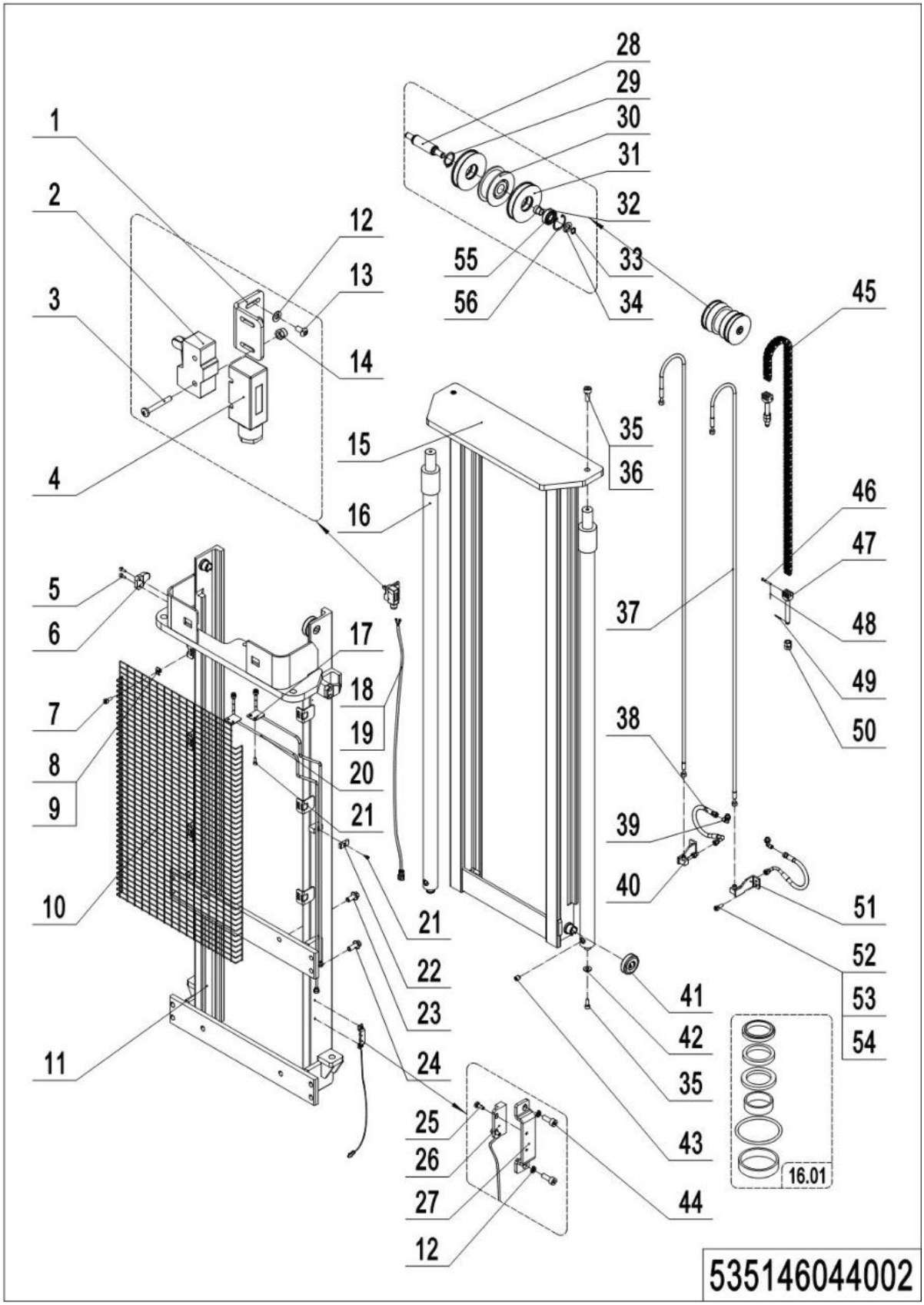

03 Two-stage Mast Standard Lift (Side-shift)(535146044002)

No.	Item Code	Mark	Item Description	Qty.	Substitute	Note
1	534744520036	2	Fixing Plate	1		
2	920200300001		Microswitch	1		
3	910200500028	1	Screw	2		
4	920200300008		Protective Cover	1		
5	910200200057	1	Screw	4		
6	275044020076		Fixing Plate	2		
7	910200200038	1	Screw	4		
8	940801500001	1	Cage Nut	6		
9	320443020321	1	Press Plate	6		
10	535044020024	2	Protective Frame	1		2900
10	535044020021	2	Protective Frame	1		3200
10	535044020023	2	Protective Frame	1		3600
11	535144010010	2	Outer Mast(2900)	1		
11	535144010006	2	Outer Mast(3200)	1		
11	535144010000	2	Outer Mast(3600)	1		
12	910400100003	1	Flat Washer	4		
13	910200300005	1	Screw	2		
14	910300500001	1	Nut	2		
15	535044010017	2	Inner Mast(2900)	1		
15	535044010016	2	Inner Mast(3200)	1		
15	535044010015	2	Inner Mast(3600)	1		
16	535044010008	2	Cylinder	2		2900
16	535044010007	2	Cylinder	2		3200
16	535044010006	2	Cylinder	2		3600
16.01	535098510003	1	Seal Kit	2		
17	535144010013	2	Steel Tube	1		2900
17	535144010009	2	Steel Tube	1		3200
17	535144010002	2	Steel Tube	1		3600
18	921600400003	1	Cable Tie	5		

1= Supply as package. 2= Supply with constraints. 3= Phasing-out supply. 4= Supply as assembly. 5= Check other tables.

03 Two-stage Mast Standard Lift (Side-shift) (535146044002)Continuation1

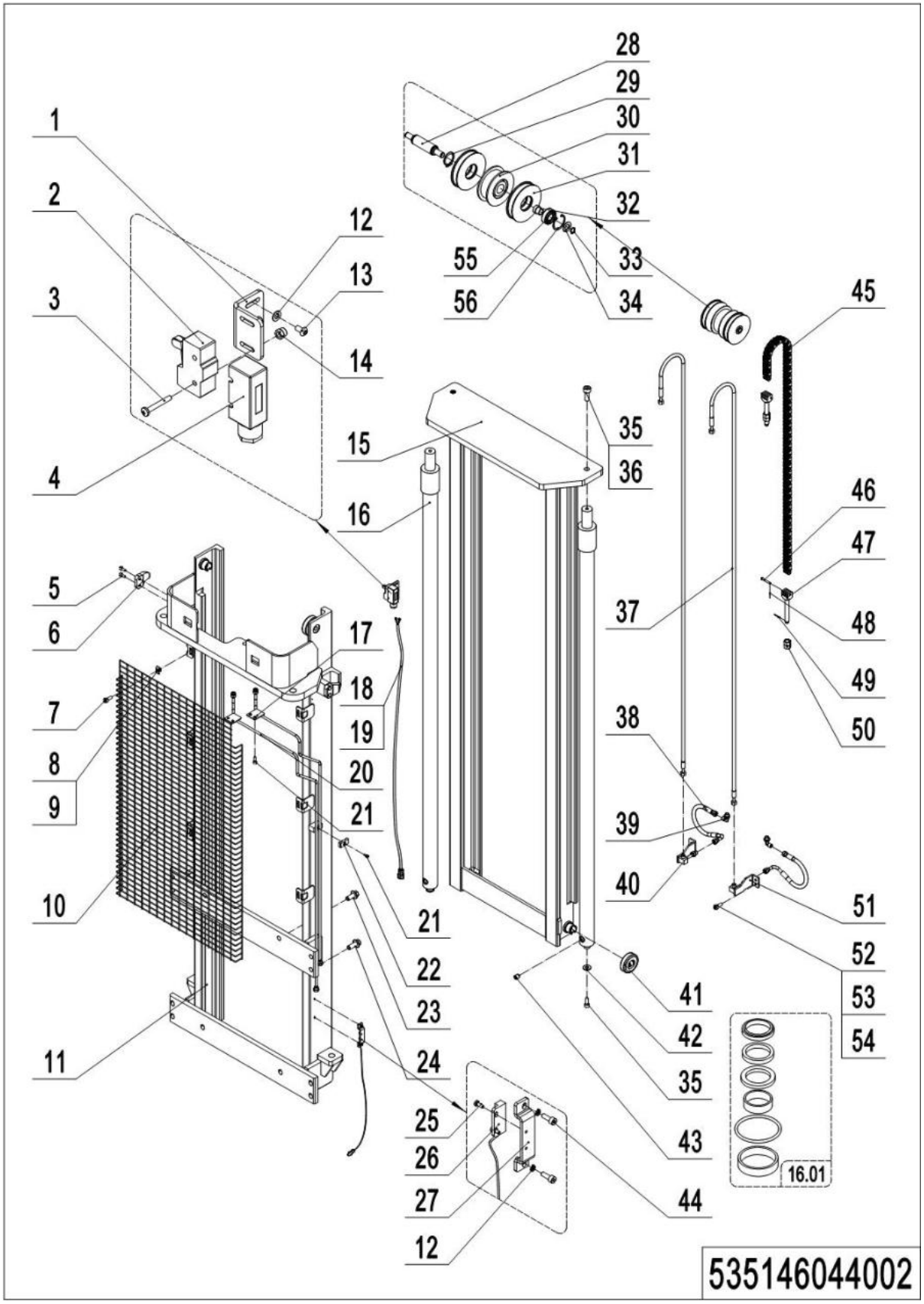

03 Two-stage Mast Standard Lift (Side-shift)(535146043502)Continuation1

No.	Item Code	Mark	Item Description	Qty.	Substitute	Note
19	534733010015	2	Wire Harness	1		2900
19	535133510001	2	Wire Harness	1		3200
19	535133510002	2	Wire Harness	1		3600
20	535144010012	2	Steel Tube	1		2900
20	535144010008	2	Steel Tube	1		3200
20	535144010003	2	Steel Tube	1		3600
21	910200200033	1	Screw	5		
22	534844520007	2	Press Plate	1		
23	910100800005	1	Bolt	4		
24	910100800006	1	Bolt	8		
25	910200500010	1	Screw	2		
26	534833510003		Switch	1		
27	534744520059	2	Protective Cover	1		
28	535144520002		Axle	1		
29	910401300016	1	Circlip	2		
30	940200500011		Sprocket Bearing	1		
31	535944520000		Pulley	2		
32	534844520011		Sleeve	2		
33	910401300007	1	Circlip	2		
34	534844520008		Washer	2		
35	910200200097	1	Screw	4		
36	910400500008	1	Spring Washer	2		
37	534844010008	2	Hose	2		2900
37	534844010006	2	Hose	2		3200
37	534844010011	2	Hose	2		3600
38	534844010014	2	Hose	2		
39	950401100002		Joint	2		
40	535144010016		Adapter	1		
41	940200300004		Compound Roller	4		

1= Supply as package. 2= Supply with constraints. 3= Phasing-out supply. 4= Supply as assembly. 5= Check other tables.

03 Two-stage Mast Standard Lift (Side-shift) (535146044002)Continuation2

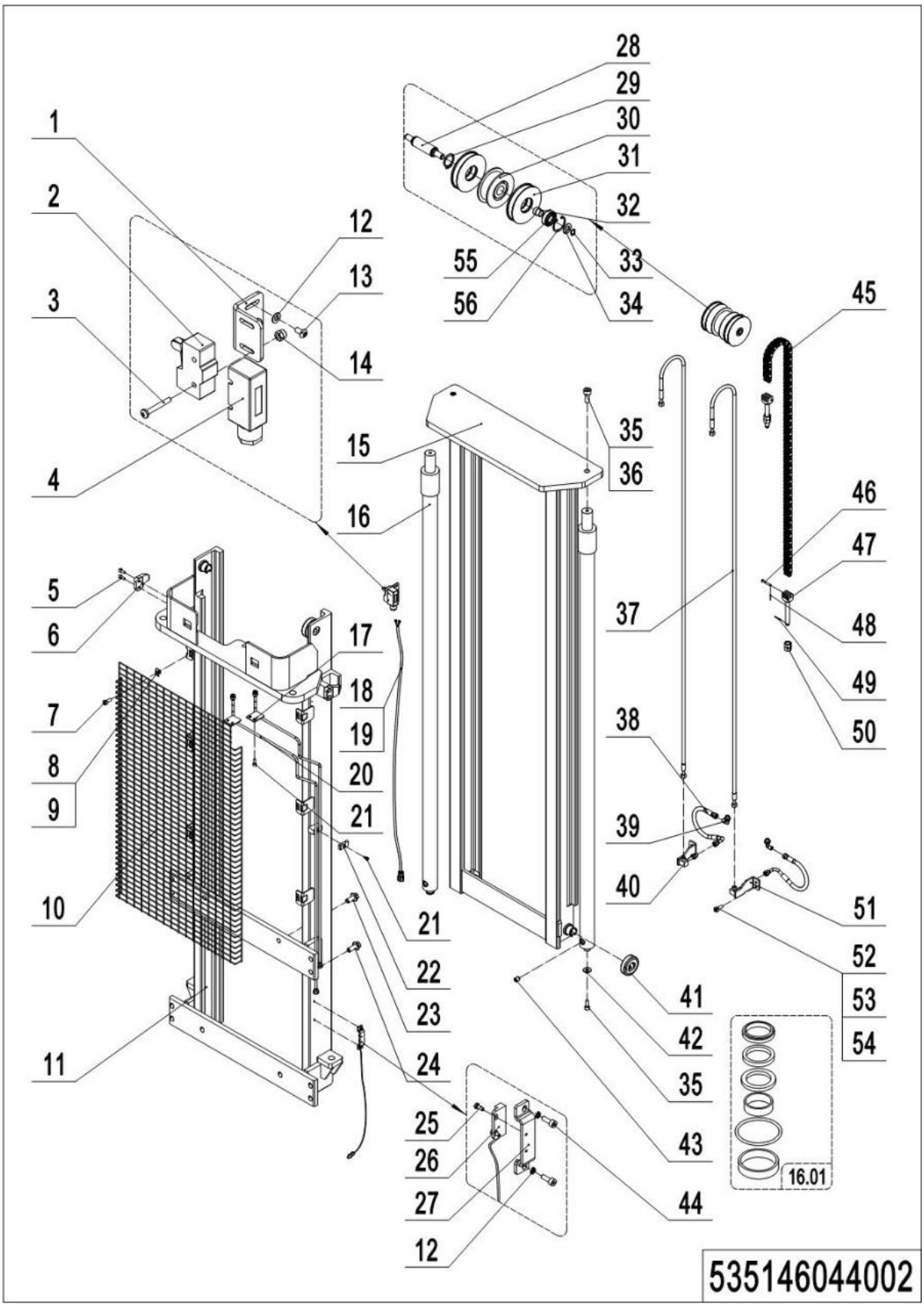

03 Two-stage Mast Standard Lift (Side-shift)(535146043502)Continuation2

No.	Item Code	Mark	Item Description	Qty.	Substitute	Note
42	534744520015		Subplate	2		
43	950600300001		Safety Valve	2		
44	910200200015	1	Screw	2		
45	535045010009	2	Chain	1		2900
45	535144010014	2	Chain	1		3200
45	535144010015	2	Chain	1		3600
46	941100800009	1	Pin	2		
47	535045020024		Chain Anchor	2		
48	910600600015	1	Cotter Pin	2		
49	910600600023	1	Cotter Pin	2		
50	910300200008	1	Nut	4		
51	535144010017	2	Adapter	1		
52	910200200035	1	Screw	4		
53	910400100005	1	Flat Washer	8		
54	910400500005	1	Spring Washer	8		
55	534844520008		Washer	2		
56	910401300007	1	Circlip	2		

04 Triple Mast Full Free Lift (535146044501)

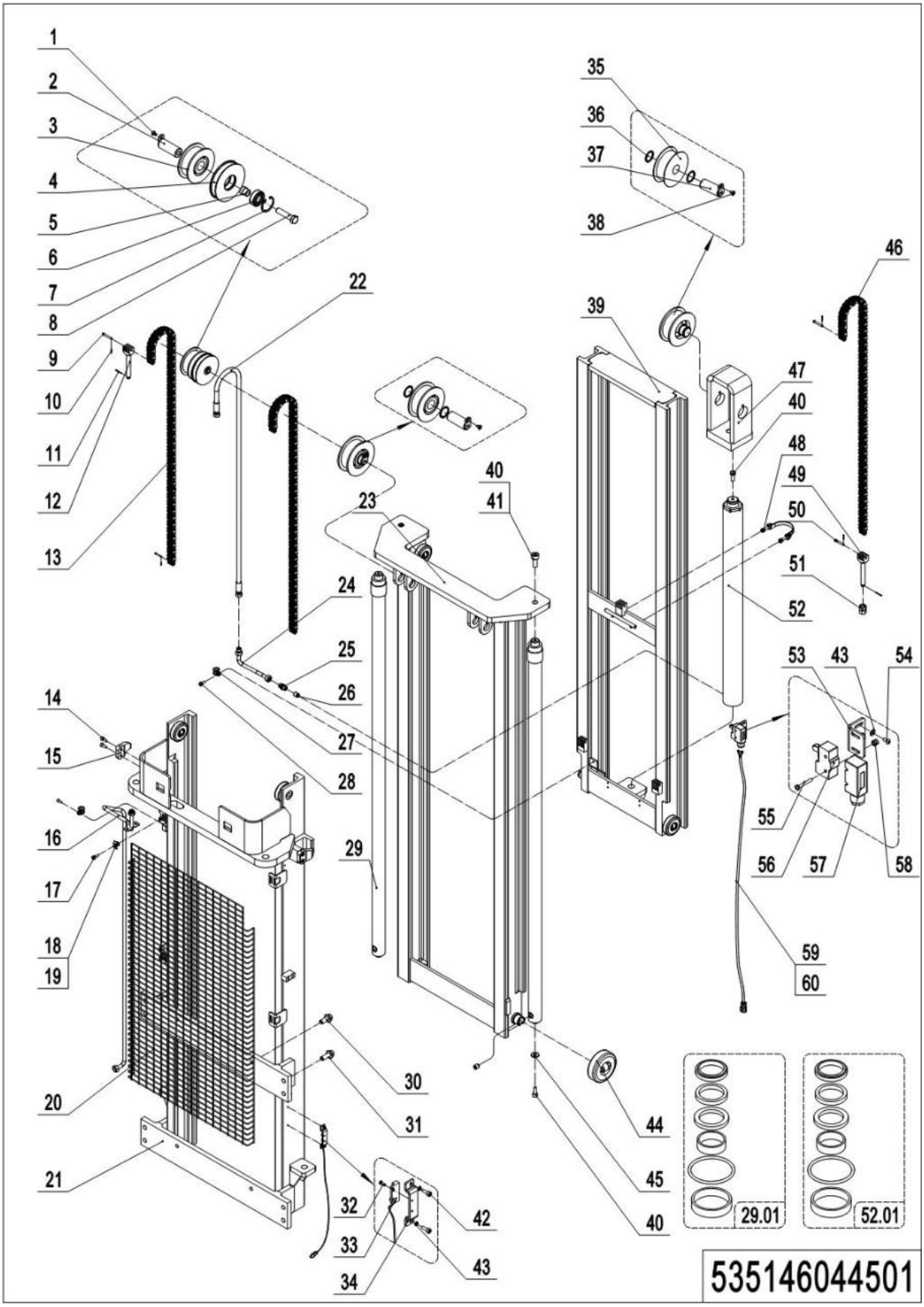

1= Supply as package. 2= Supply with constraints. 3= Phasing-out supply. 4= Supply as assembly. 5= Check other tables.

04 Triple Mast Full Free Lift(535146044501)

No.	Item Code	Mark	Item Description	Qty.	Substitute	Note
1	910200400016	1	Screw	2		
2	533544510006		Pin	2		
3	940200500010		Sprocket Bearing	2		
4	535944520000		Pulley	1		
5	534844520011		Sleeve	1		
6	910700200019		Bearing	1		
7	910401400013	1	Circlip	1		
8	910100100071		Bolt	1		
9	941100800006	1	Pin	4		
10	910600600015	1	Cotter Pin	4		
11	910600600032	1	Cotter Pin	3		
12	532644520038		Chain Anchor	2		
13	535044510020	2	Chain	2		4000
13	534145010005	2	Chain	2		4300
13	535044510016	2	Chain	1		4600
14	910200200057	1	Screw	4		
15	275044020076		Fixing Plate	2		
16	535144510019	2	Steel Tube	1		4000
16	535144510013	2	Steel Tube	1		4300
16	535144510002	2	Steel Tube	1		4600
17	910200200038	1	Screw	6		
18	940801500001	1	Cage Nut	6		
19	320443020321	1	Press Plate	6		
20	535044020025	2	Protective Frame	1		4000
20	535044020022	2	Protective Frame	1		4300
20	535044020021	2	Protective Frame	1		4600
21	535144510017	2	Outer Mast(4000)	1		
21	535144510010	2	Outer Mast(4300)	1		
21	535144510000	2	Outer Mast(4600)	1		

04 Triple Mast Full Free Lift (535146044501)Continuation1

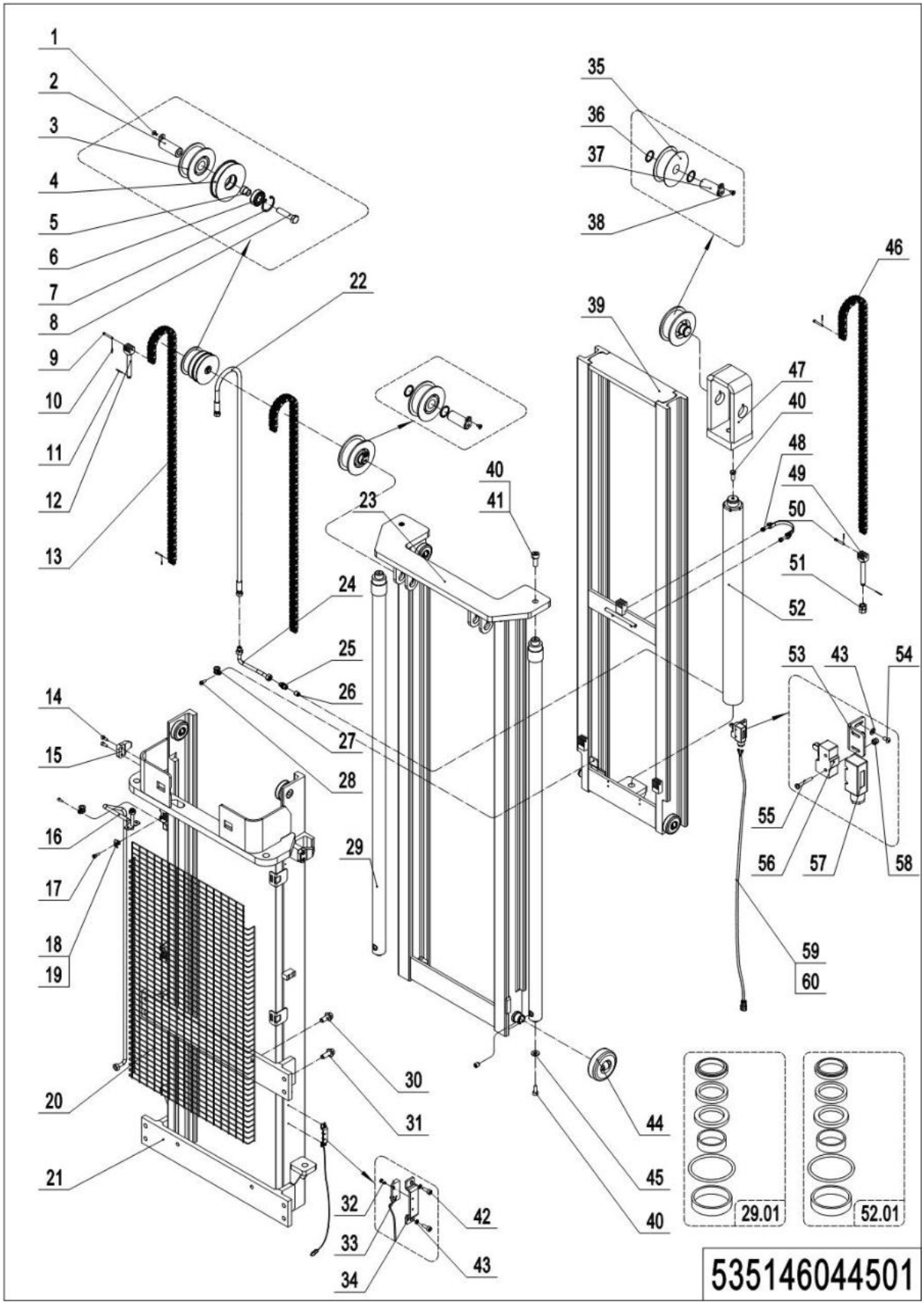

1= Supply as package. 2= Supply with constraints. 3= Phasing-out supply. 4= Supply as assembly. 5= Check other tables.

04 Triple Mast Full Free Lift (535146044501)Continuation1

No.	Item Code	Mark	Item Description	Qty.	Substitute	Note
22	535044510019	2	Hose	1		4000
22	532644520143	2	Hose	1		4300
22	532644520144	2	Hose	1		4600
23	535044510026	2	Middle Mast(4000)	1		
23	535044510025	2	Middle Mast(4300)	1		
23	535044510024	2	Middle Mast(4600)	1		
24	535144510007	2	Steel Tube	1		
25	950400400003		Joint	3		
26	950600300001		Safety Valve	3		
27	951000100001	1	Hose Clamp	3		
28	910200200035	1	Screw	3		
29	535044510002	2	Cylinder	2		4000
29	535044510001	2	Cylinder	2		4300
29	535044510000	2	Cylinder	2		4600
29.01	534798510000	1	Seal Kit	2		
30	910100800005	1	Bolt	4		
31	910100800006	1	Bolt	8		
32	910200500010	1	Screw	2		
33	534833510003		Switch	1		
34	534744520059	2	Protective Cover	1		
35	940200500011		Sprocket Bearing	1		
36	940600500008	1	Washer	6		
37	535045010008		Pin	1		
38	910200400016	1	Screw	3		
39	535144510018	2	Inner Mast(4000)	1		
39	535144510011	2	Inner Mast(4300)	1		
39	535144510001	2	Inner Mast(4600)	1		
40	910200200097	1	Screw	5		
41	910400500008	1	Spring Washer	2		

04 Triple Mast Full Free Lift (535146044501)Continuation2

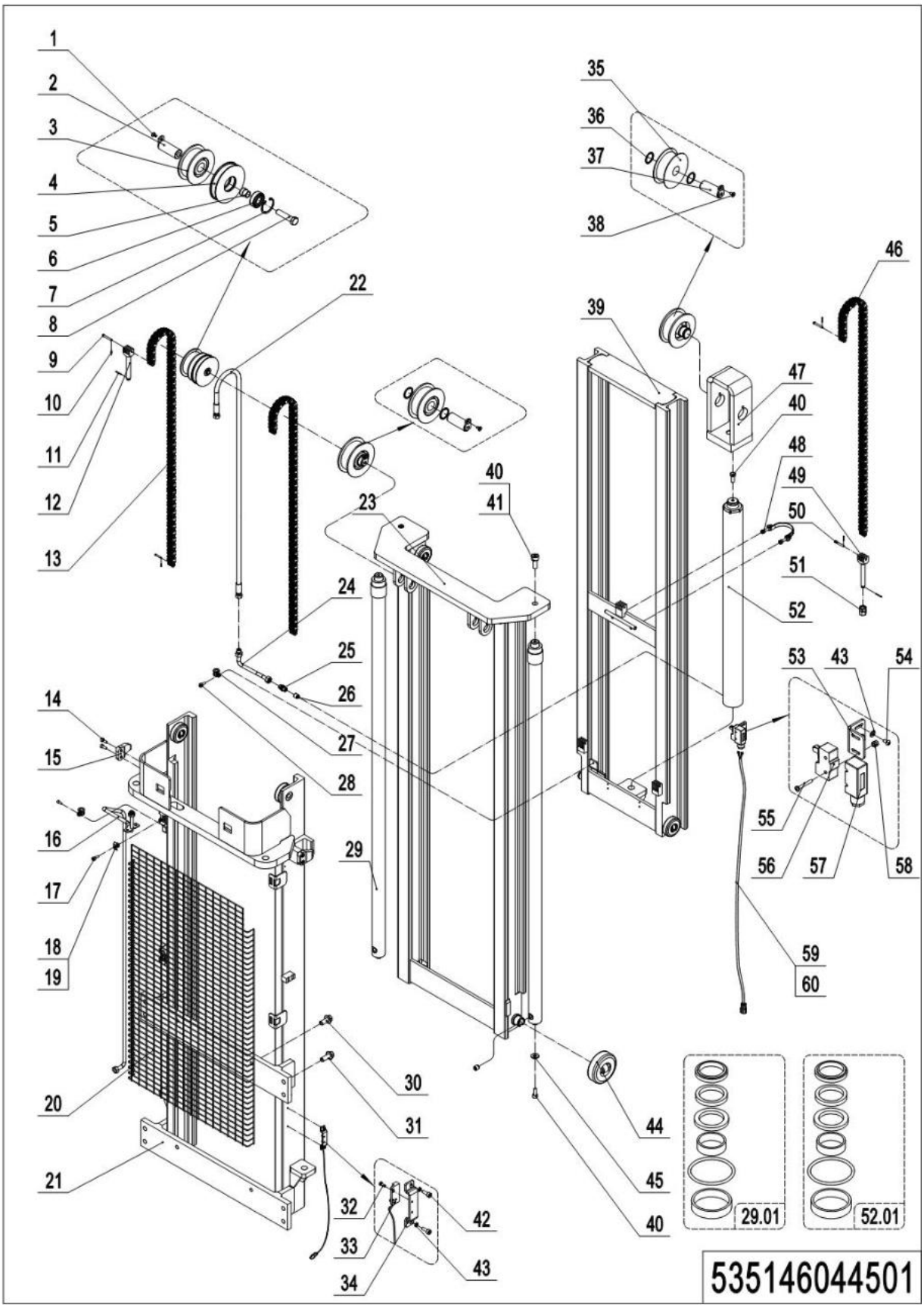

04 Triple Mast Full Free Lift (535146044501)Continuation2

No.	Item Code	Mark	Item Description	Qty.	Substitute	Note
42	910200200015	1	Screw	2		
43	910400100003	1	Flat Washer	4		
44	940200300022		Compound Roller	8		
45	534744520015		Subplate	2		
46	535044510018	2	Chain	1		4000
46	535043510022	2	Chain	1		4300
46	535044510017	2	Chain	1		4600
47	535043510034		Yoke	1		
48	940800600002		Hoop	1		
49	535045020024		Chain Anchor	1		
50	941100800009	1	Pin	2		
51	910300200008	1	Nut	6		
52	535043510012	2	Cylinder	1		4000
52	534744510013	2	Cylinder	1		4300
52	534744510012	2	Cylinder	1		4600
52.01	534798510001	1	Seal Kit	1		
53	534744520036	2	Fixing Plate	1		
54	910200300005	1	Screw	2		
55	910200500028	1	Screw	2		
56	920200300001		Microswitch	1		
57	920200300008		Protective Cover	1		
58	910300500001	1	Nut	2		
59	534733010014	2	Wire Harness	1		4000
59	534733010015	2	Wire Harness	1		4300
59	535133510001	2	Wire Harness	1		4600
60	921600400003	1	Cable Tie	5		

05 Triple Mast Full Free Lift (Side-shift) (535146044502)

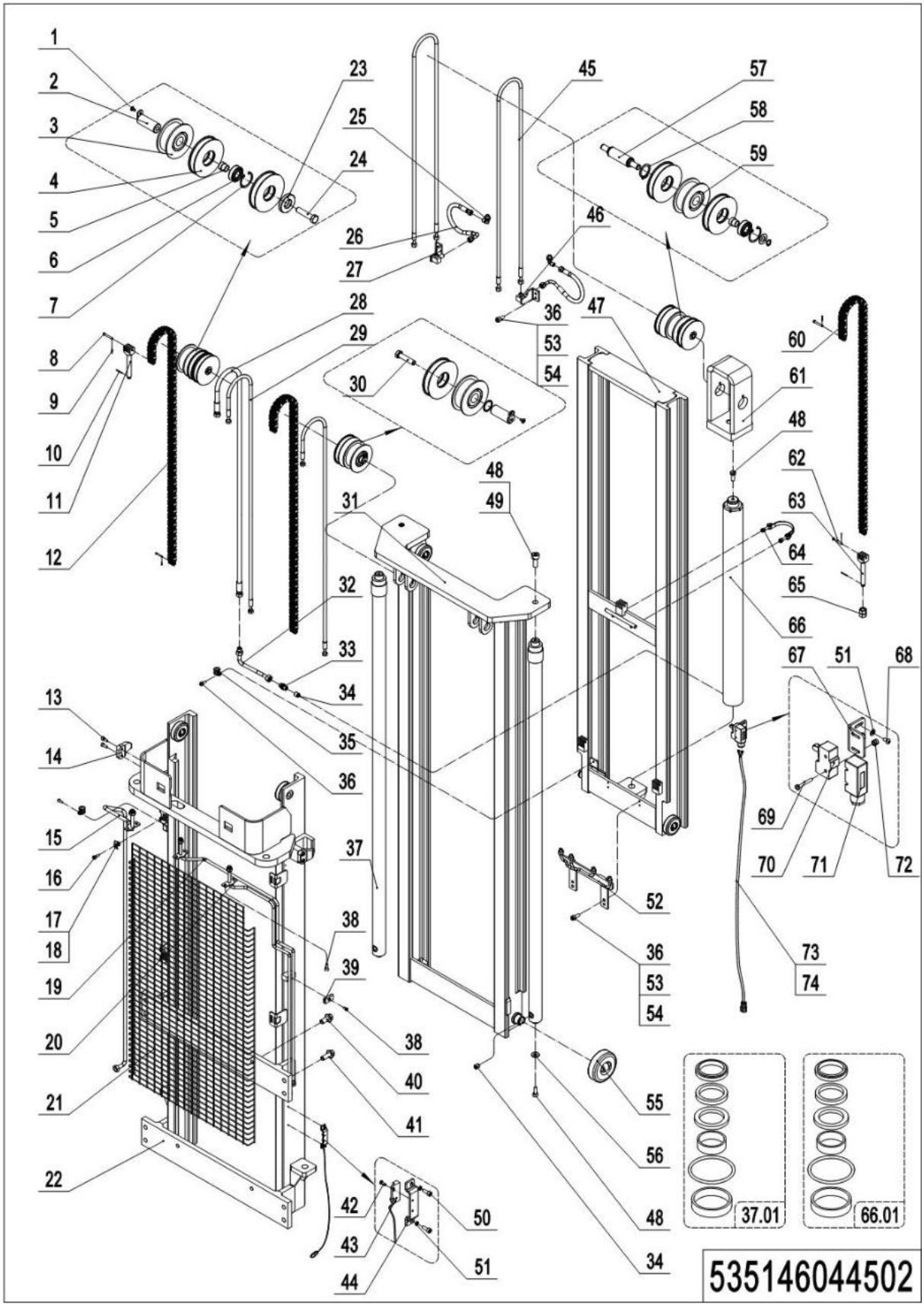

1= Supply as package. 2= Supply with constraints. 3= Phasing-out supply. 4= Supply as assembly. 5= Check other tables.

05 Triple Mast Full Free Lift (Side-shift)(535146044502)

No.	Item Code	Mark	Item Description	Qty.	Substitute	Note
1	910200400016	1	Screw	2		
2	533544510006		Pin	2		
3	940200500010		Sprocket Bearing	2		
4	535944520000		Pulley	5		
5	534844520011		Sleeve	5		
6	910700200019		Bearing	5		
7	910401400013	1	Circlip	5		
8	941100800006	1	Pin	4		
9	910600600015	1	Cotter Pin	6		
10	910600600023	1	Cotter Pin	3		
11	532644520038		Chain Anchor	2		
12	535044510020	2	Chain	2		4000
12	534145010005	2	Chain	2		4300
12	535044510016	2	Chain	2		4600
13	910200200057	1	Screw	4		
14	275044020076	2	Fixing Plate	2		
15	535144510019	2	Steel Tube	1		4000
15	535144510013	2	Steel Tube	1		4300
15	535144510002	2	Steel Tube	1		4600
16	910200200038	1	Screw	6		
17	940801500001	1	Cage Nut	6		
18	320443020321	1	Press Plate	6		
19	535144510021	2	Steel Tube	1		4000
19	535144510015	2	Steel Tube	1		4300
19	535144510003	2	Steel Tube	1		4600
20	535144510020	2	Steel Tube	1		4000
20	535144510014	2	Steel Tube	1		4300
20	535144510004	2	Steel Tube	1		4600
21	535044020025	2	Protective Frame	1		4000

05 Triple Mast Full Free Lift (Side-shift) (535146044502)Continuation1

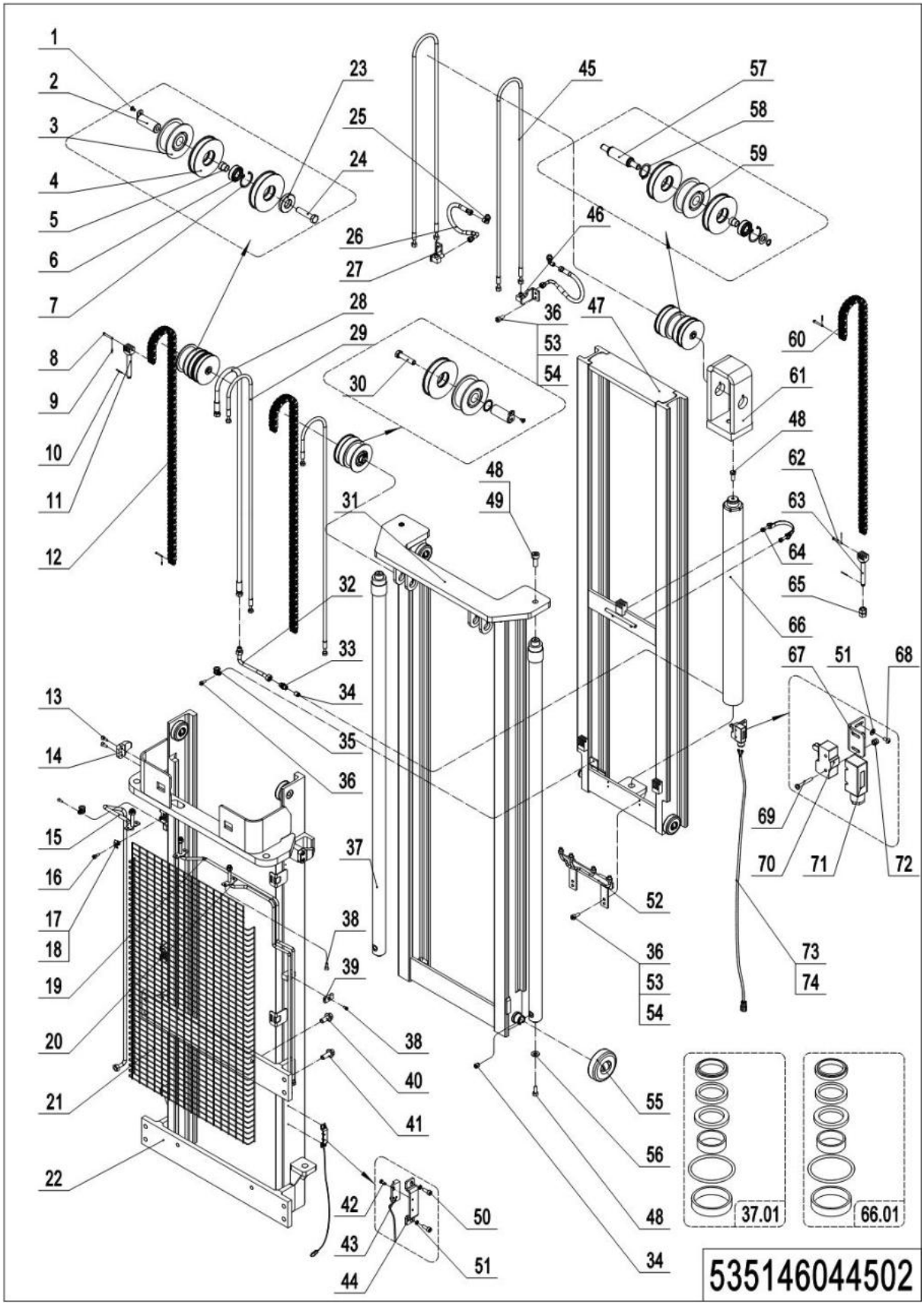

05 Triple Mast Full Free Lift (Side-shift)(535146044502)Continuation1

No.	Item Code	Mark	Item Description	Qty.	Substitute	Note
21	535044020022	2	Protective Frame	1		4300
21	535044020021	2	Protective Frame	1		4600
22	535144510017	2	Outer Mast(4000)	1		
22	535144510010	2	Outer Mast(4300)	1		
22	535144510000	2	Outer Mast(4600)	1		
23	255027520004		Washer	1		
24	910100100074		Bolt	1		
25	950401100002		Joint	2		
26	534844010014	2	Hose	2		
27	535144510024	2	Adapter	1		
28	535044510019	2	Hose	1		4000
28	532644520143	2	Hose	1		4300
28	532644520144	2	Hose	1		4600
29	535144510022	2	Hose	2		4000
29	535144510012	2	Hose	2		4300
29	534844510005	2	Hose	2		4600
30	534844520003		Spindle nose	1		
31	535044510026	2	Middle Mast(4000)	1		
31	535044510025	2	Middle Mast(4300)	1		
31	535044510024	2	Middle Mast(4600)	1		
32	535144510007	2	Steel Tube	1		
33	950400400003		Joint	3		
34	950600300001		Safety Valve	3		
35	951000100001	1	Hose Clamp	3		
36	910200200035	1	Screw	11		
37	535044510002	2	Cylinder	2		4000
37	535044510001	2	Cylinder	2		4300
37	535044510000	2	Cylinder	2		4600
37.01	535098510000	1	Seal Kit	2		

05 Triple Mast Full Free Lift (Side-shift) (535146044502)Continuation2

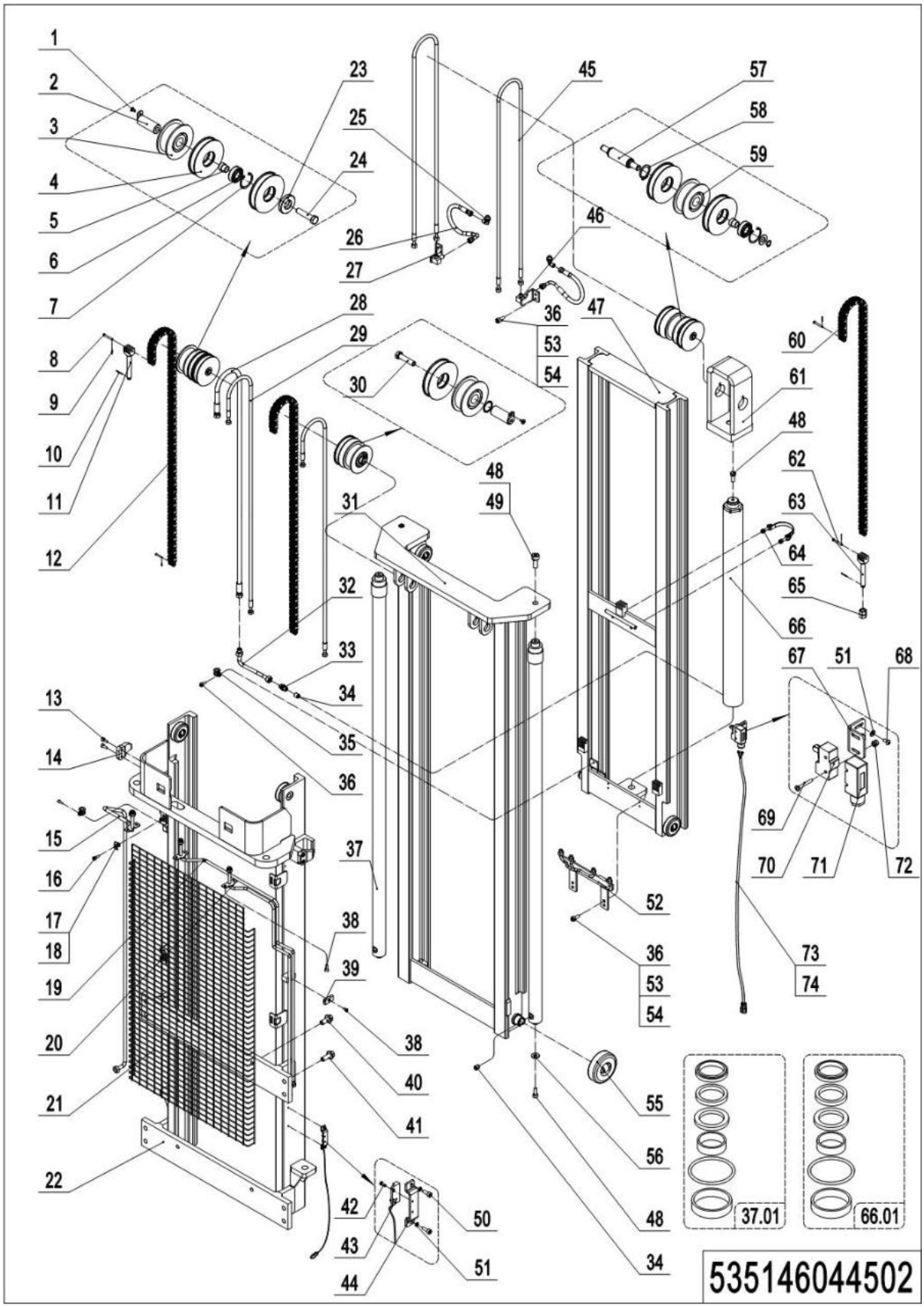

05 Triple Mast Full Free Lift (Side-shift)(535146044502)Continuation2

No.	Item Code	Mark	Item Description	Qty.	Substitute	Note
38	910200200033	1	Screw	5		
39	534844520007	2	Press Plate	1		
40	910100800005	1	Bolt	4		
41	910100800006	1	Bolt	8		
42	910200500010	1	Screw	2		
43	534833510003		Switch	1		
44	534744520059	2	Protective Cover	1		
45	535144510023	2	Hose	2		4000
45	535144510016	2	Hose	2		4300
45	535144510009		Hose	2		4600
46	535144510025	2	Adapter	1		
47	535144510018	2	Inner Mast(4000)	1		
47	535144510011	2	Inner Mast(4300)	1		
47	535144510001	2	Inner Mast(4600)	1		
48	910200200097	1	Screw	5		
49	910400500008	1	Spring Washer	2		
50	910200200015	1	Screw	2		
51	910400100003	1	Flat Washer	4		
52	535144510008	2	Steel Tube	1		
53	910400100005	1	Flat Washer	8		
54	910400500005	1	Spring Washer	8		
55	940200300022		Compound Roller	8		
56	534744520015	2	Subplate	2		
57	534844520002		Axle	1		
58	910401300016	1	Circlip	2		
59	940200500011		Sprocket Bearing	1		
60	535044510018	2	Chain	1		4000
60	535043510022	2	Chain	1		4300
60	535044510017	2	Chain	1		4600
61	535043510034	2	Yoke	1		

1= Supply as package. 2= Supply with constraints. 3= Phasing-out supply. 4= Supply as assembly. 5= Check other tables.

05 Triple Mast Full Free Lift (Side-shift) (535146044502)Continuation3

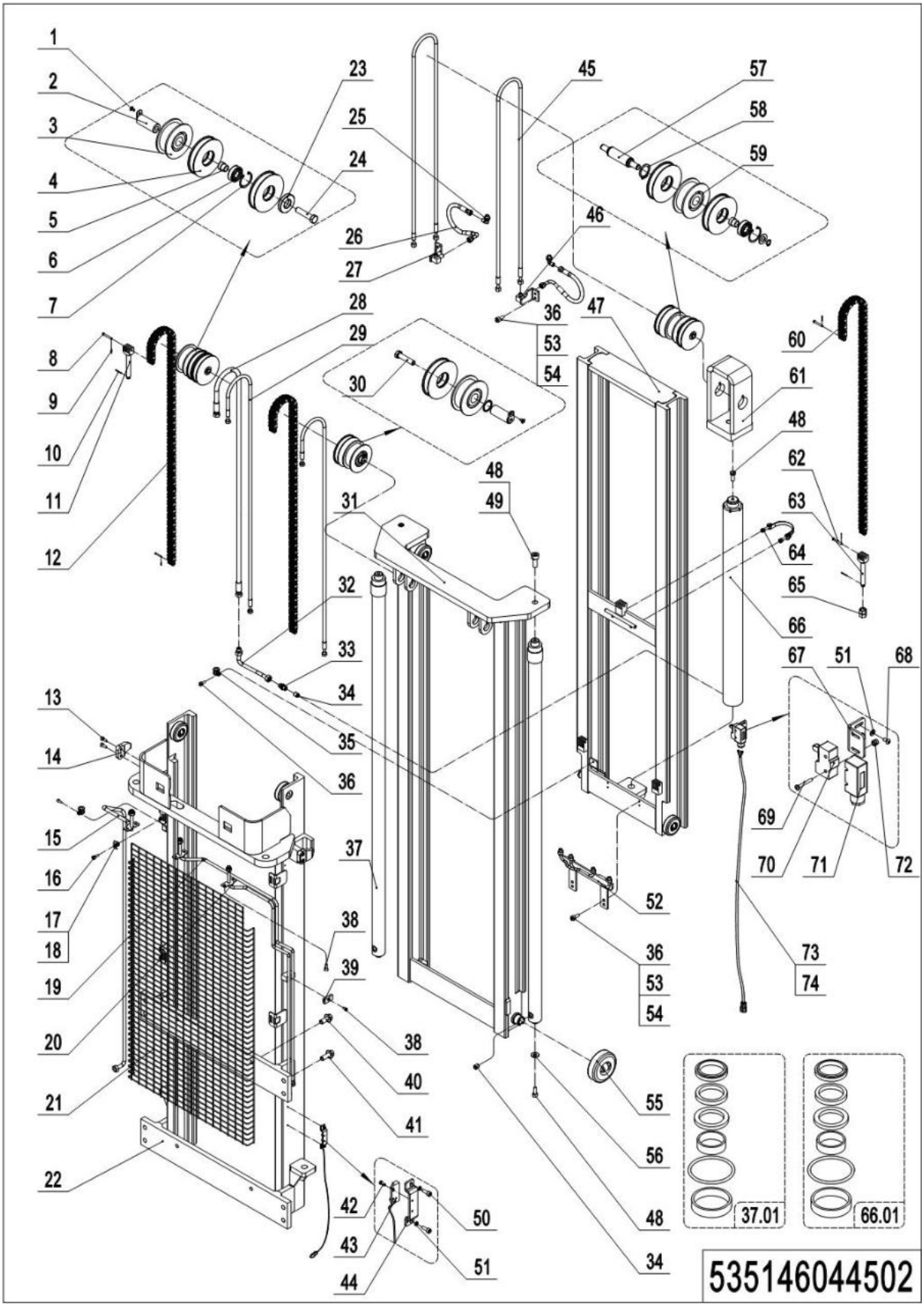

05 Triple Mast Full Free Lift (Side-shift)(535146044502)Continuation3

No.	Item Code	Mark	Item Description	Qty.	Substitute	Note
62	941100800009	1	Pin	2		
63	535045020024		Chain Anchor	1		
64	940800600002		Hoop	1		
65	910300200008	1	Nut	6		
66	535043510012	2	Cylinder	1		4000
66	534744510013	2	Cylinder	1		4300
66	534744510012	2	Cylinder	1		4600
66.01	534798510001	1	Seal Kit	1		
67	534744520036	2	Fixing Plate	1		
68	910200300005	1	Screw	2		
69	910200500028	1	Screw	2		
70	920200300001		Microswitch	1		
71	920200300008		Protective Cover	1		
72	910300500001	1	Nut	2		
73	534733010014	2	Wire Harness	1		4000
73	534733010015	2	Wire Harness	1		4300
73	535133510001	2	Wire Harness	1		4600
74	921600400003	1	Cable Tie	5		

06 Triple Mast Standard Lift (535146045001)

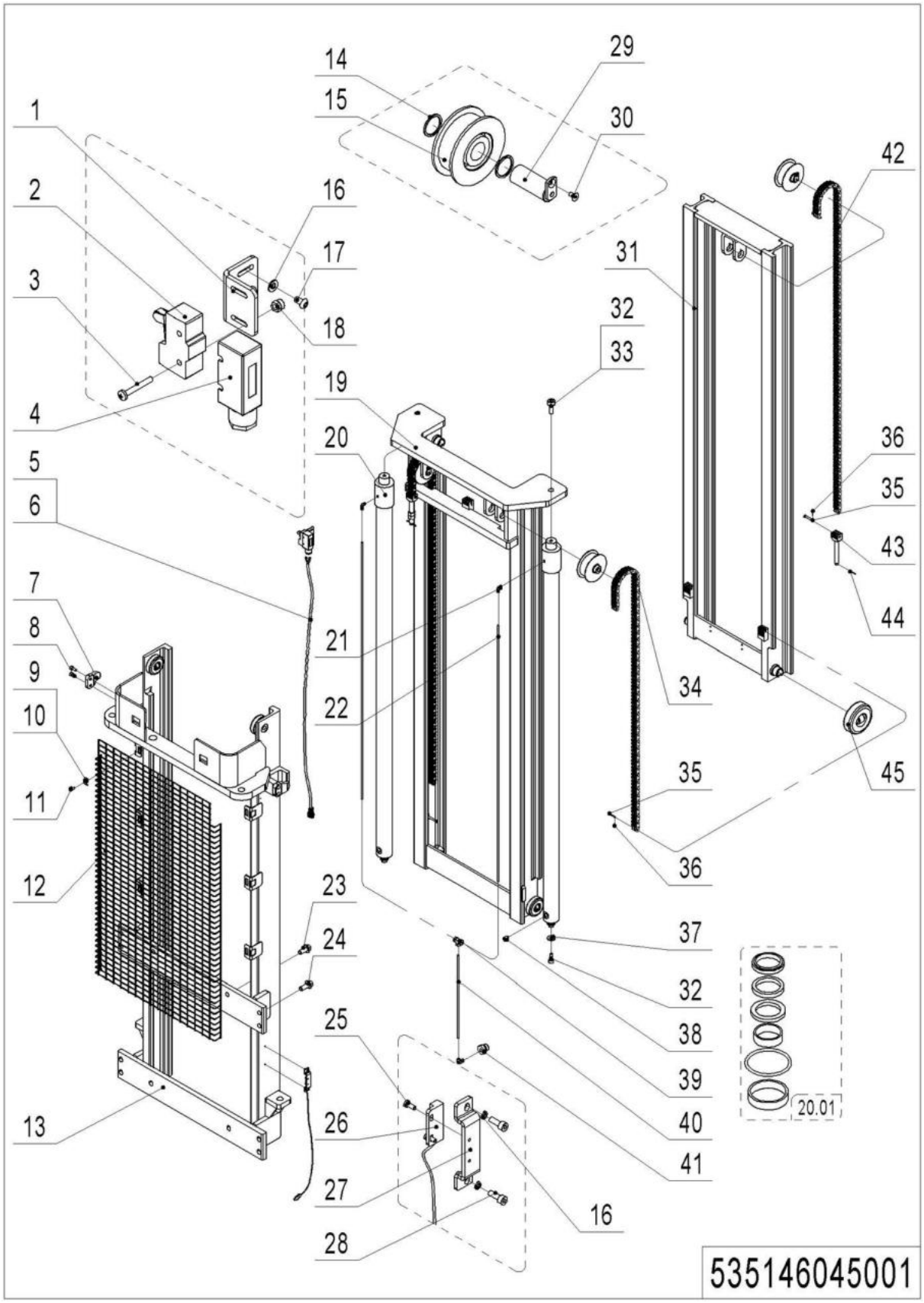

1= Supply as package. 2= Supply with constraints. 3= Phasing-out supply. 4= Supply as assembly. 5= Check other tables.

06 Triple Mast Standard Lift(535146045001)

No.	Item Code	Mark	Item Description	Qty.	Substitute	Note
1	534744520036	2	Fixing Plate	1		
2	920200300001		Microswitch	1		
3	910200500028		Screw	2		
4	920200300008		Protective Cover	1		
5	534733010015	2	Wire Harness	1		4300
5	535133510001	2	Wire Harness	1		4600
6	921600400003	1	Cable Tie	5		
7	275044020076		Fixing Plate	2		
8	910200200057	1	Screw	4		
9	940801500001	1	Cage Nut	6		
10	320443020321	1	Press Plate	6		
11	910200200038	1	Screw	6		
12	535044020022	2	Protective Frame	1		4300
12	535044020021	2	Protective Frame	1		4600
13	535145010001	2	Outer Mast(4300)	1		
13	535145010000	2	Outer Mast(4600)	1		
14	940600500008	1	Washer	6		
15	940200500011		Sprocket Bearing	3		
16	910400100003	1	Flat Washer	4		
17	910200300005	1	Screw	2		
18	910300500001	1	Nut	2		
19	535045010016	2	Middle Mast(4300)	1		
19	535045010015	2	Middle Mast(4600)	1		
20	535045010001	2	Cylinder	2		4300
20	535045010000	2	Cylinder	2		4600
20.01	535098510001	1	Seal Kit	2		
21	950500100001		Joint	3		
22	534745020002		Pipe	2		
23	910100800005	1	Bolt	4		

1= Supply as package. 2= Supply with constraints. 3= Phasing-out supply. 4= Supply as assembly. 5= Check other tables.

06 Triple Mast Standard Lift (535146045001)Continuation

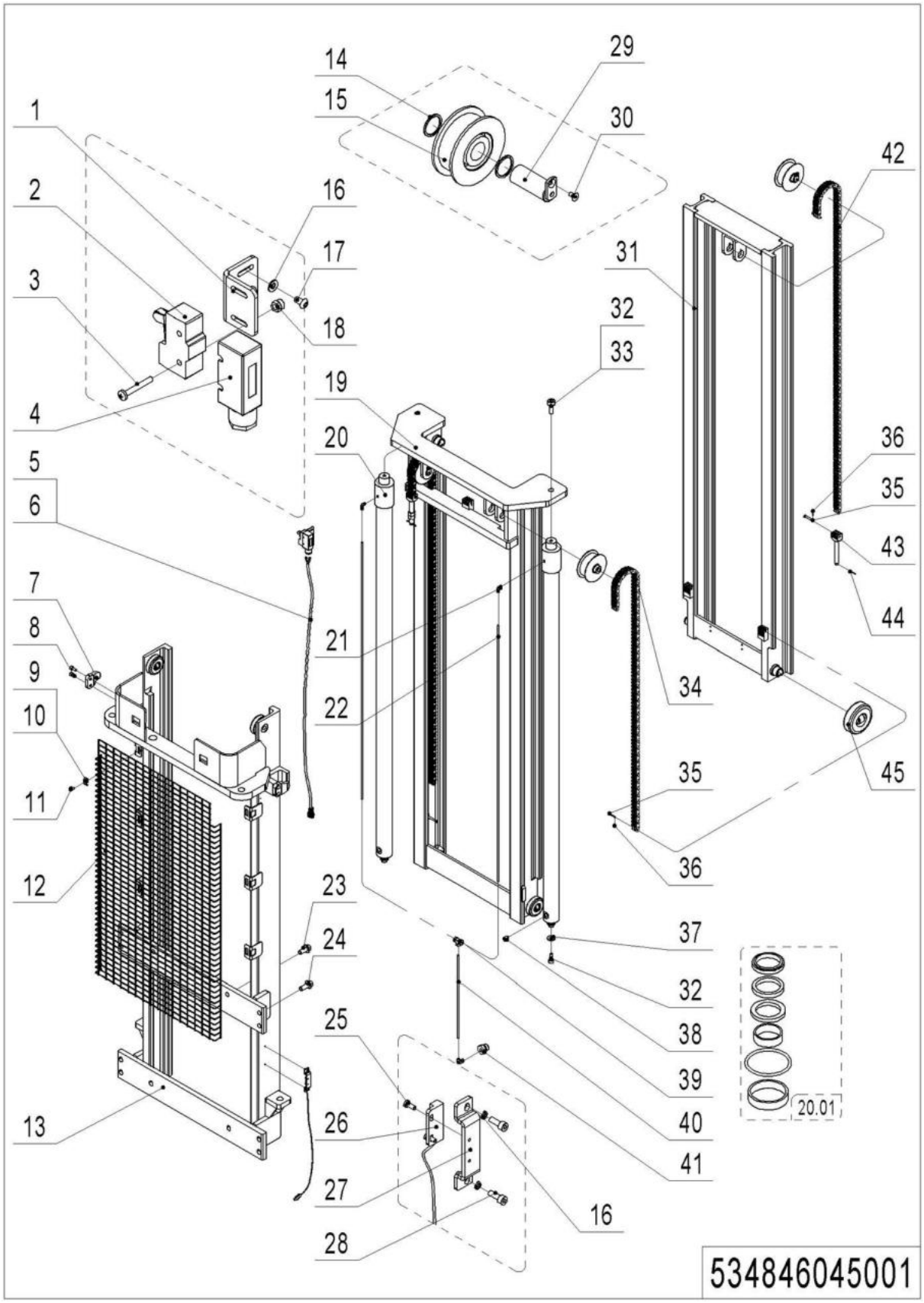

06 Triple Mast Standard Lift(535146045001)Continuation

No.	Item Code	Mark	Item Description	Qty.	Substitute	Note
24	910100800006	1	Bolt	8		
25	910200500010	1	Screw	2		
26	534833510003		Switch	1		
27	534744520059	2	Protective Cover	1		
28	910200200015	1	Screw	2		
29	535045010008		Pin	3		
30	910200400016	1	Screw	3		
31	535045010018	2	Inner Mast(4300)	1		
31	535045010017	2	Inner Mast(4600)	1		
32	910200200097	1	Screw	4		
33	910400500008	1	Spring Washer	2		
34	535044010010	2	Chain	2		4300
34	535045010010	2	Chain	2		4600
35	941100800009	1	Pin	6		
36	910600600015	1	Cotter Pin	6		
37	534744520015		Subplate	2		
38	950600300001		Safety Valve	2		
39	950500200001		Joint	1		
40	535024010003		Pipe	1		
41	534824020003		Adapter	1		
42	535044010011	2	Chain	1		4300
42	535044010010	2	Chain	1		4600
43	535045020024		Chain Anchor	3		
44	910600600032	1	Cotter Pin	3		
45	940200300022		Compound Roller	8		

Chapter 5: Steering System, Braking System, Wheels

01 Tiller Unit (504446011001)

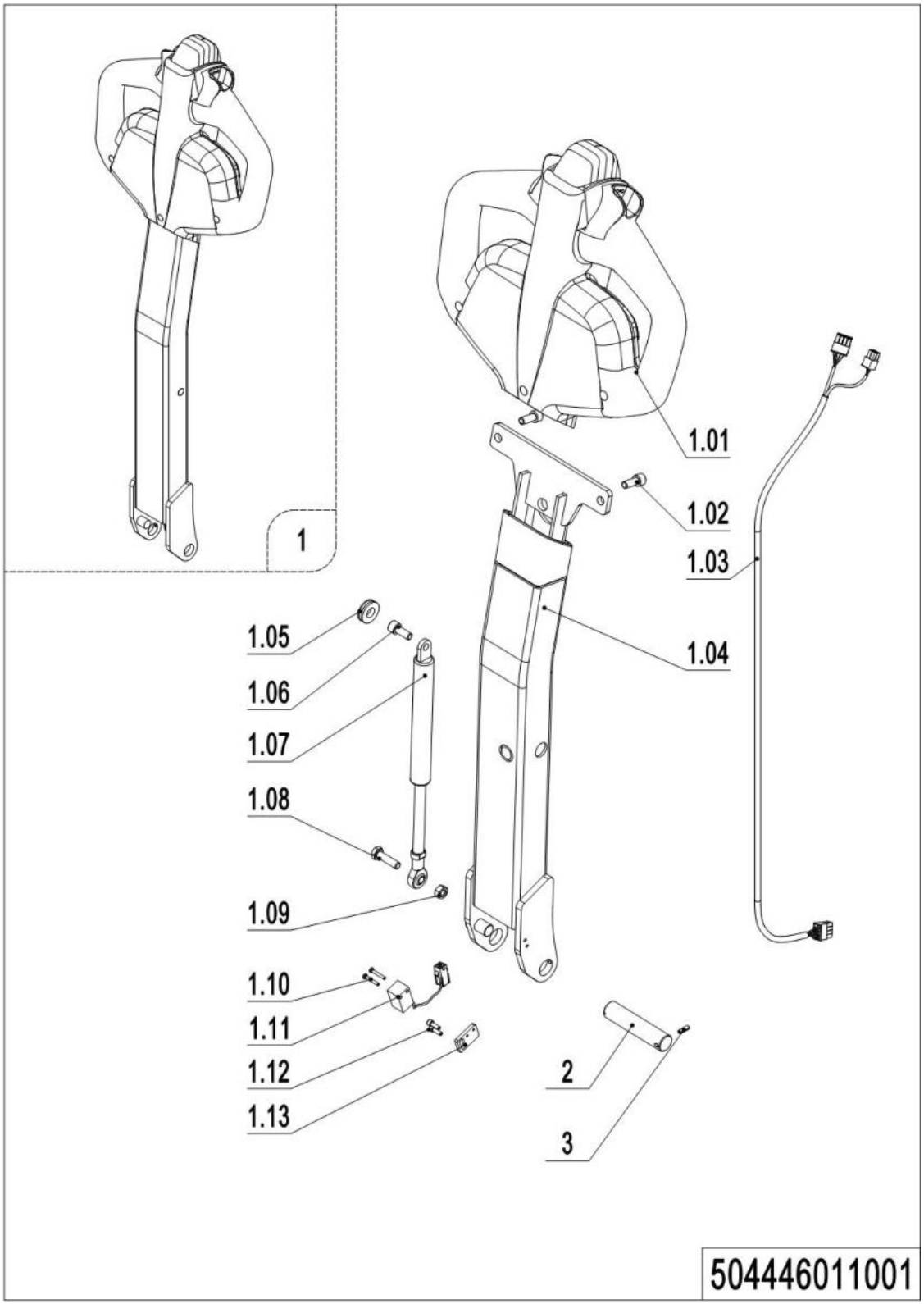

1= Supply as package. 2= Supply with constraints. 3= Phasing-out supply. 4= Supply as assembly. 5= Check other tables.

01 Tiller Unit (504446011001)

No.	Item Code	Mark	Item Description	Qty.	Substitute	Note
1	504498510027		Tiller Assembly	1		
1.01	----------		Tiller	1		Check505646010002
1.02	910200200057	1	Screw	2		
1.03	534733010001	2	Wire Harness	1		
1.04	504411010001	2	Tiller	1		
1.05	502311020009		Close Plate	1		
1.06	941100400001	1	Screw	1		
1.07	940400100011		Air Spring	1		
1.08	910100300024	1	Bolt	1		
1.09	910300100006	1	Nut	1		
1.10	910200500015	1	Screw	2		
1.11	505633510002		Proximity Switch	1		
1.12	910200200014	1	Screw	2		
1.13	504411020009		Baseboard	1		
2	504411020011		Axle	1		
3	910600400009	1	Spring Pin	1		

1= Supply as package. 2= Supply with constraints. 3= Phasing-out supply. 4= Supply as assembly. 5= Check other tables.

02 Tiller (505646010002)

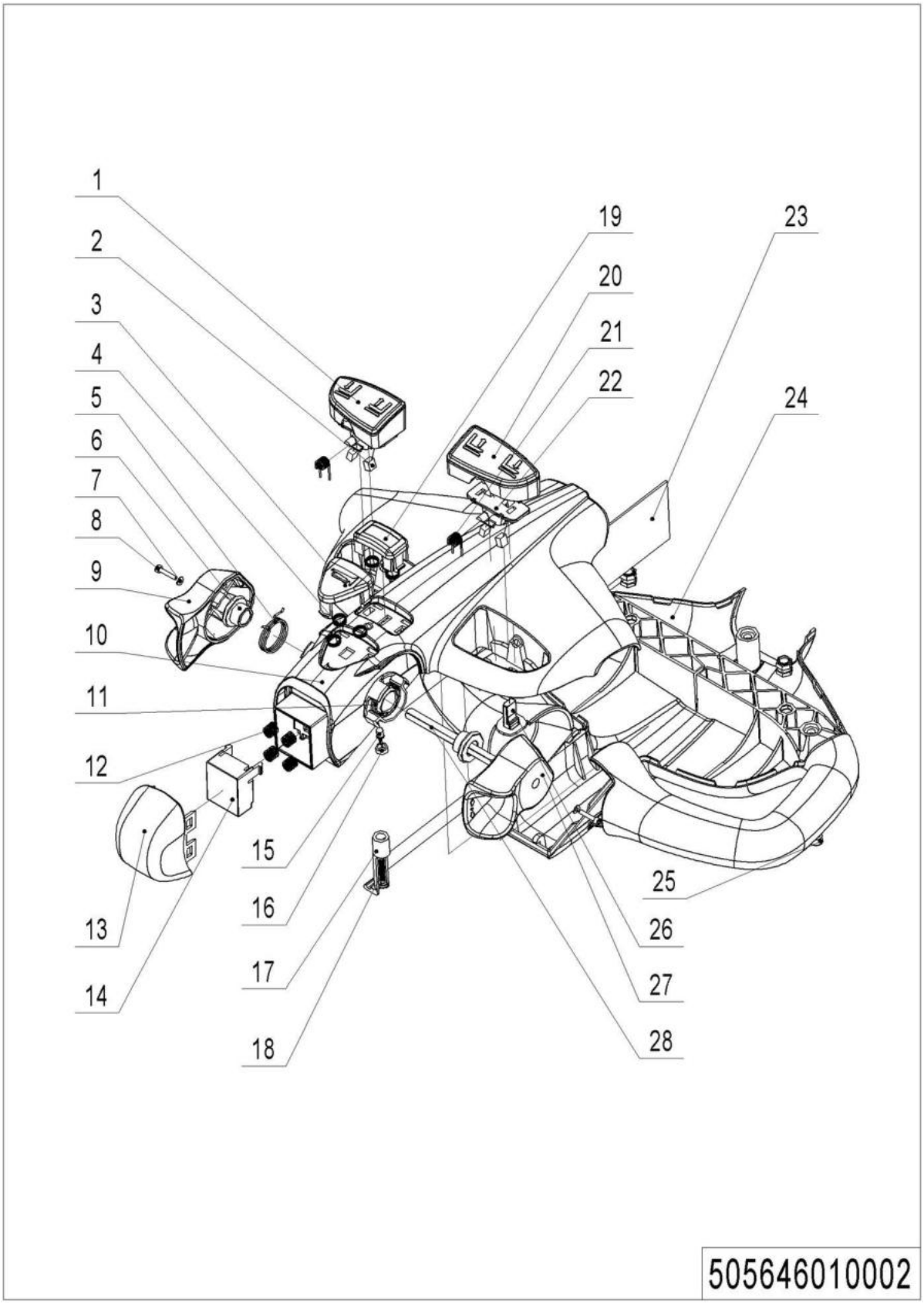

1= Supply as package. 2= Supply with constraints. 3= Phasing-out supply. 4= Supply as assembly. 5= Check other tables.

02 Tiller(505646010002)

No.	Item Code	Mark	Item Description	Qty.	Substitute	Note
--	922100100001		Tiller	1		
1	505698520016	2	Button cap	1		
2	505698520005	2	Magnet	4		
3	505698520002	2	Horn Button	1		
4	505698520003	2	Spring	5		
5	505698520027	2	Torsional Spring	1		
6	505698520004	2	Sleeve	2		
7	505698520009	2	Washer	2		
8	505698520008	2	Screw	2		
9	505698520001	2	Traction lever	1		
10	505698520014	2	Handle Cap	1		
11	505698520026	2	Torsional Spring	1		
12	505698520006	2	Spring	4		
13	505698520020	2	Button Cap-	1		
14	505698520019	2	Pedestal	1		
15	505698520024	2	Light	1		
16	505698520025	2	Lamp Holder	1		
17	505698520012	2	Clamp	1		
18	505698520023	2	Screw	1		
19	505698520021	2	Button Cap	1		
20	505698520022	2	Button Cap	1		
21	505698520018	2	Torsional Spring	2		
22	505698520017	2	Fixing Base	2		
23	505698520028	2	circuit Board	1		
24	505698520015	2	Handle Cap	1		
25	505698520007	2	Screw	3		
26	505698520013	2	Sensor	2		
27	505698520010	2	Traction lever	1		
28	505698520011	2	Axle-Traction lever	1		

03 Load Wheel(534746017001)

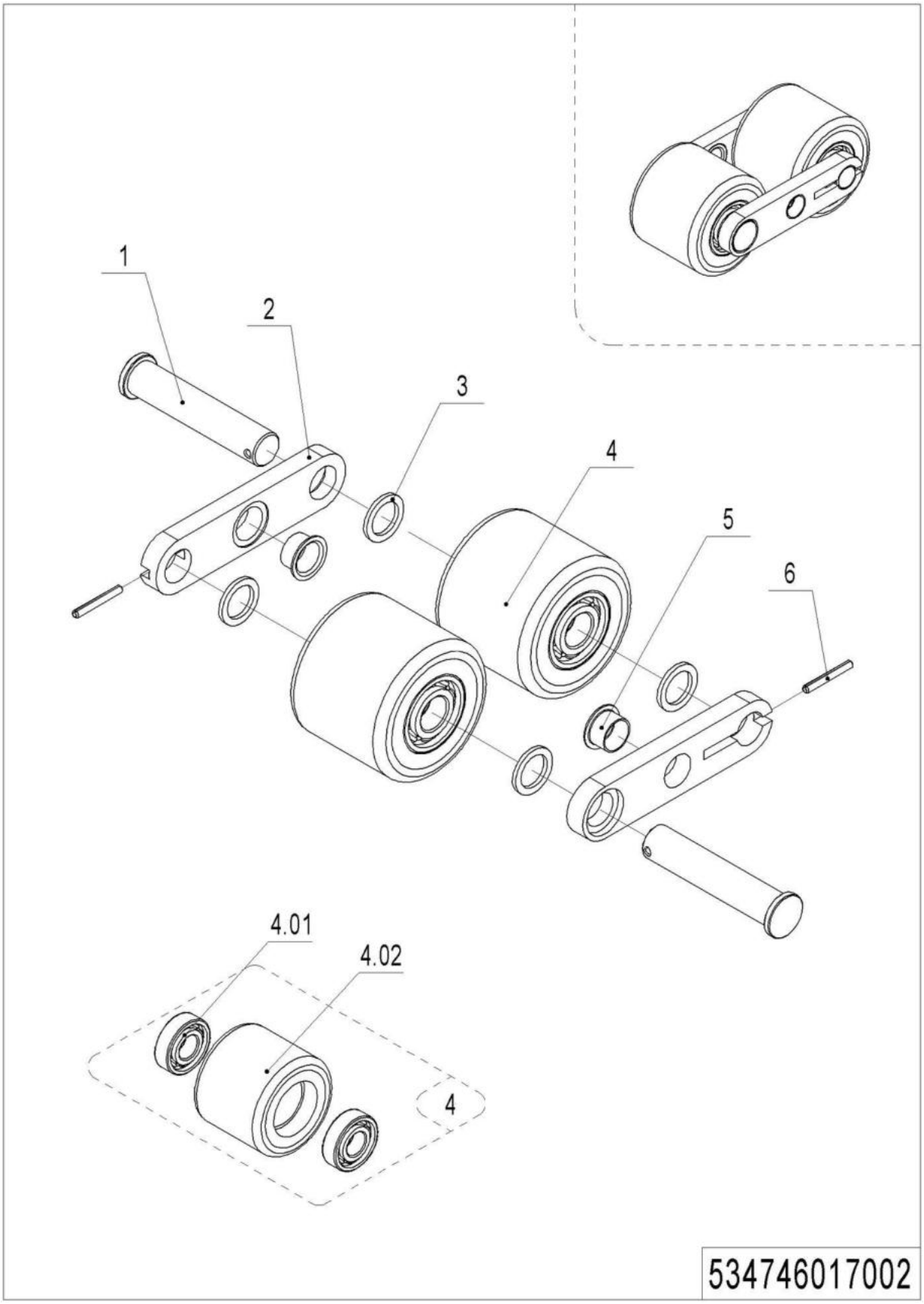

1= Supply as package. 2= Supply with constraints. 3= Phasing-out supply. 4= Supply as assembly. 5= Check other tables.

03 Load Wheel(534746017001)

No.	Item Code	Mark	Item Description	Qty.	Substitute	Note
1	534717020001		Pin	2		
2	534717020002	2	Plate	2		
3	940600500004	1	Washer	4		
4	532998510001	2	Wheel	2		
4.01	910700200019		Bearing	4		
4.02	940300300009		WheelΦ84x70	2		
5	940500200003	1	Bushing	2		
6	910600400017	1	Spring Pin	2		

04 Caster(505646016501)

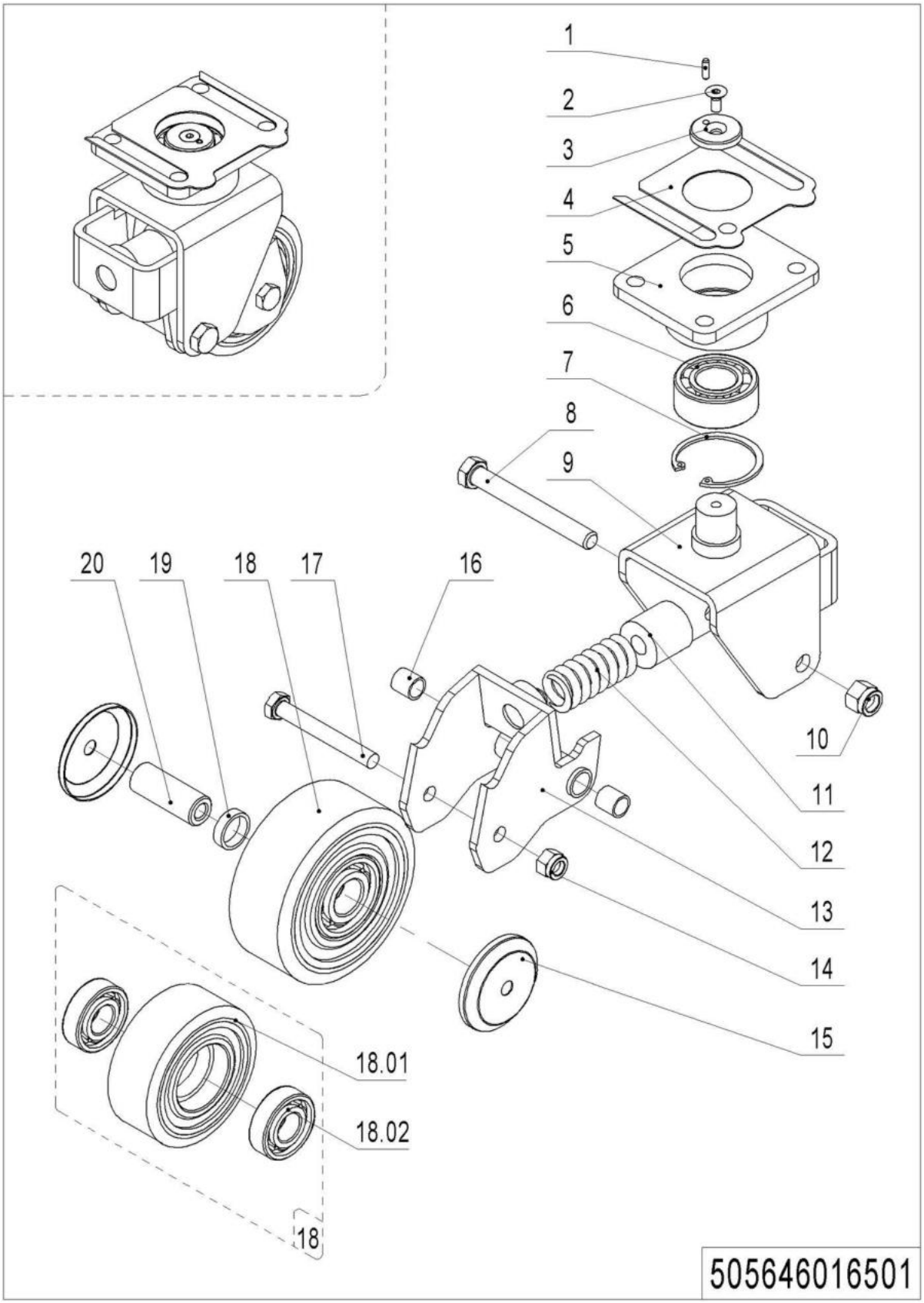

04 Caster(505646016501)

No.	Item Code	Mark	Item Description	Qty.	Substitute	Note
--	505616510000	2	Caster Assembly	2		
1	910600100004	1	Cylindrical Pin	1		
2	941100300001	1	Screw	1		
3	505616520007	1	Retaining Ring	1		
4	505616520014	1	Pad	1		
5	505616510002	2	Plate	1		
6	910700500002		Bearing	1		
7	910401400016	1	Circlip	1		
8	941100200002	1	Bolt	1		
9	505616510001	2	Wheel Carrier	1		
10	910300500006	1	Nut	1		
11	505616520000	2	Spring	1		
12	940400500007	2	Spring	1		
13	505616510003	2	Whirling Arm	1		
14	910300500005	1	Nut	1		
15	505616520011		Dust Cap	2		
16	940500100002	1	Bushing	2		
17	910100100038	1	Bolt	1		
18	505698510000	2	Wheel	1		
18.01	940300300018		WheelΦ100x40	1		
18.02	910700200019		Bearing	2		
19	505616520012	1	Check Ring	2		
20	505616520013	2	Bushing	1		

Chapter 6: Electrical Parts

01Wire Harness (534846033001)

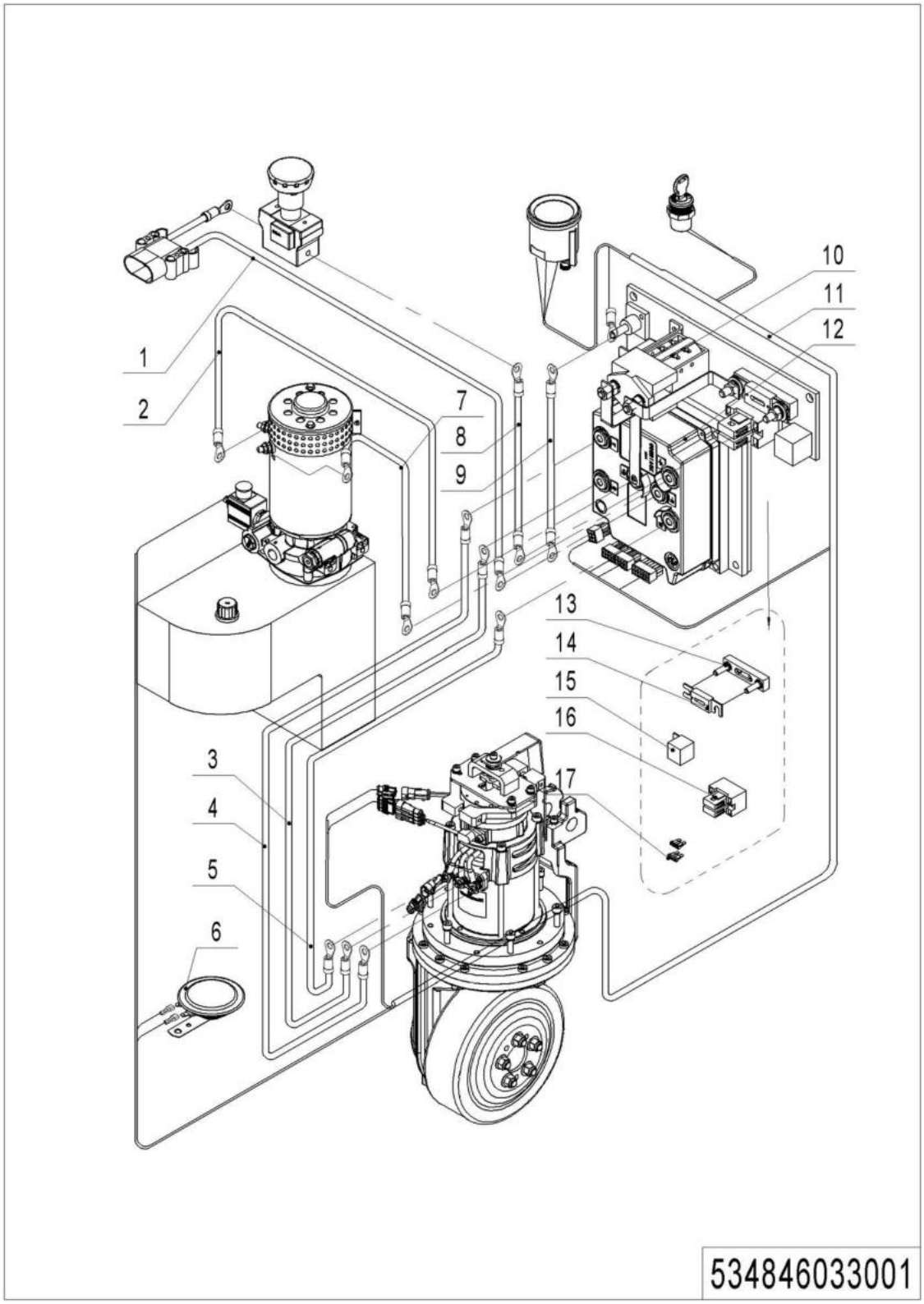

01 Wire Harness(534846033001)

No.	Item Code	Mark	Item Description	Qty.	Substitute	Note
1	534833010008	2	Wire Harness	1		
1	534833010017	2	Wire Harness	1		Li
2	534533010007	2	Cable	1		
3	534833010003	2	Cable	1		
4	534833010004	2	Cable	1		
5	534833010005	2	Cable	1		
6	920500100001		Horn	1		
7	534533010006	2	Cable	1		
8	534833010009	2	Cable	1		
9	534833010013	2	Cables	1		
10	920700100002		Contactor	1		
11	534533010000	2	Wire Harness	1		
11	534833010015	2	Wire Harness	1		Li
12	921400100048		Controller	1		
13	920100400002		Fuse Holder	1		
14	920100100013		Fuse	1		
15	920800100001		Relay	1		
16	920100400005		Fuse Holder	1		
17	920100200002		Fuse	2		

02 Wire Harness (Side-shift) (534846033002)

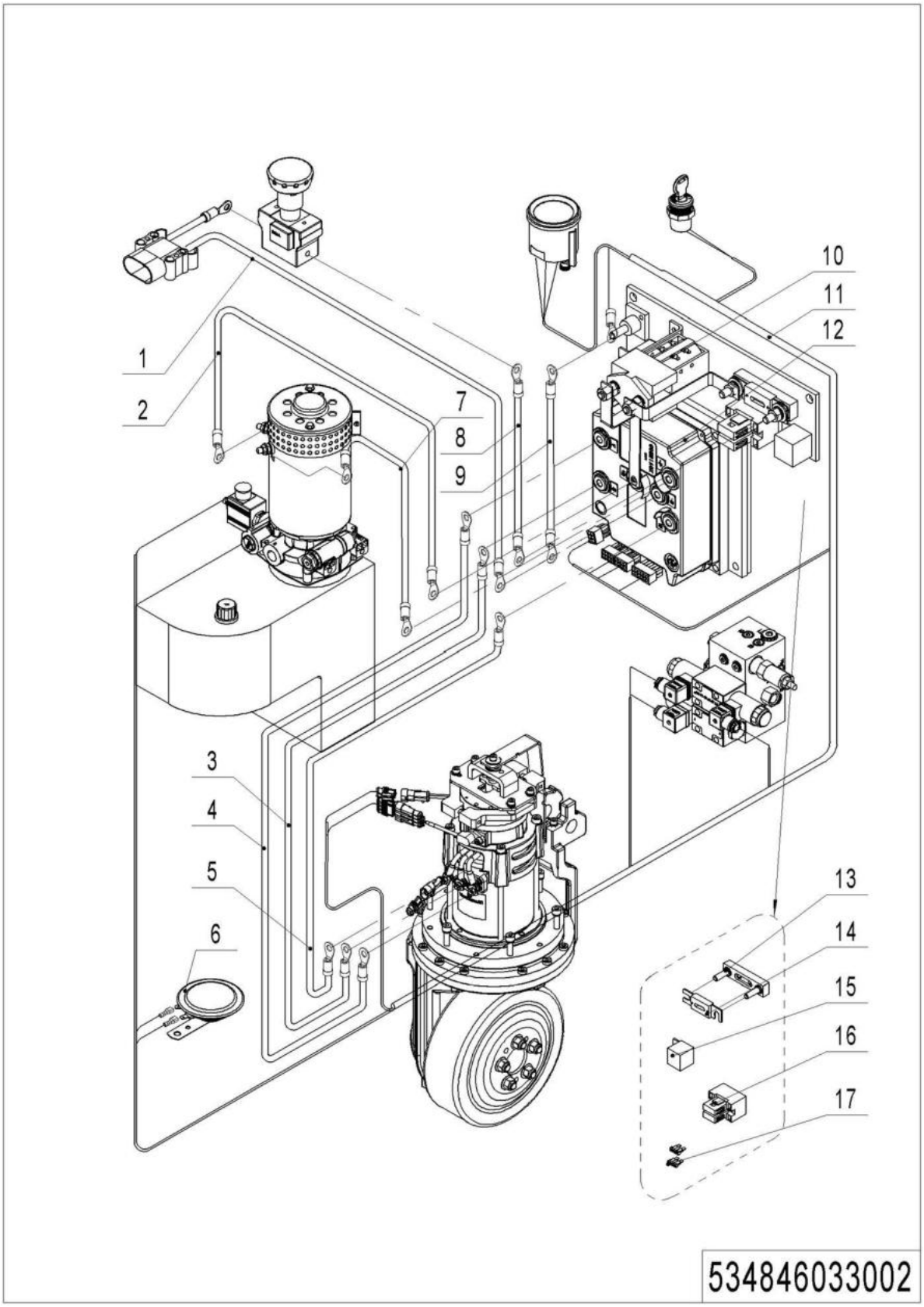

1= Supply as package. 2= Supply with constraints. 3= Phasing-out supply. 4= Supply as assembly. 5= Check other tables.

02 Wire Harness (Side-shift)(534746033002)

No.	Item Code	Mark	Item Description	Qty.	Substitute	Note
1	534833010008	2	Wire Harness	1		
1	534833010017	2	Wire Harness	1		Li
2	534533010007	2	Cable	1		
3	534833010003	2	Cable	1		
4	534833010004	2	Cable	1		
5	534833010005	2	Cable	1		
6	920500100001		Horn	1		
7	534533010006	2	Cable	1		
8	534833010009	2	Cable	1		
9	534833010013	2	Cables	1		
10	920700100002		Contactor	1		
11	534533010000	2	Wire Harness	1		
11	534833010014	2	Wire Harness	1		Li
12	921400100048		Controller	1		
13	920100400002		Fuse Holder	1		
14	920100100013		Fuse	1		
15	920800100001		Relay	1		
16	920100400005		Fuse Holder	1		
17	920100200002		Fuse	2		

03 Charger (534846036501)

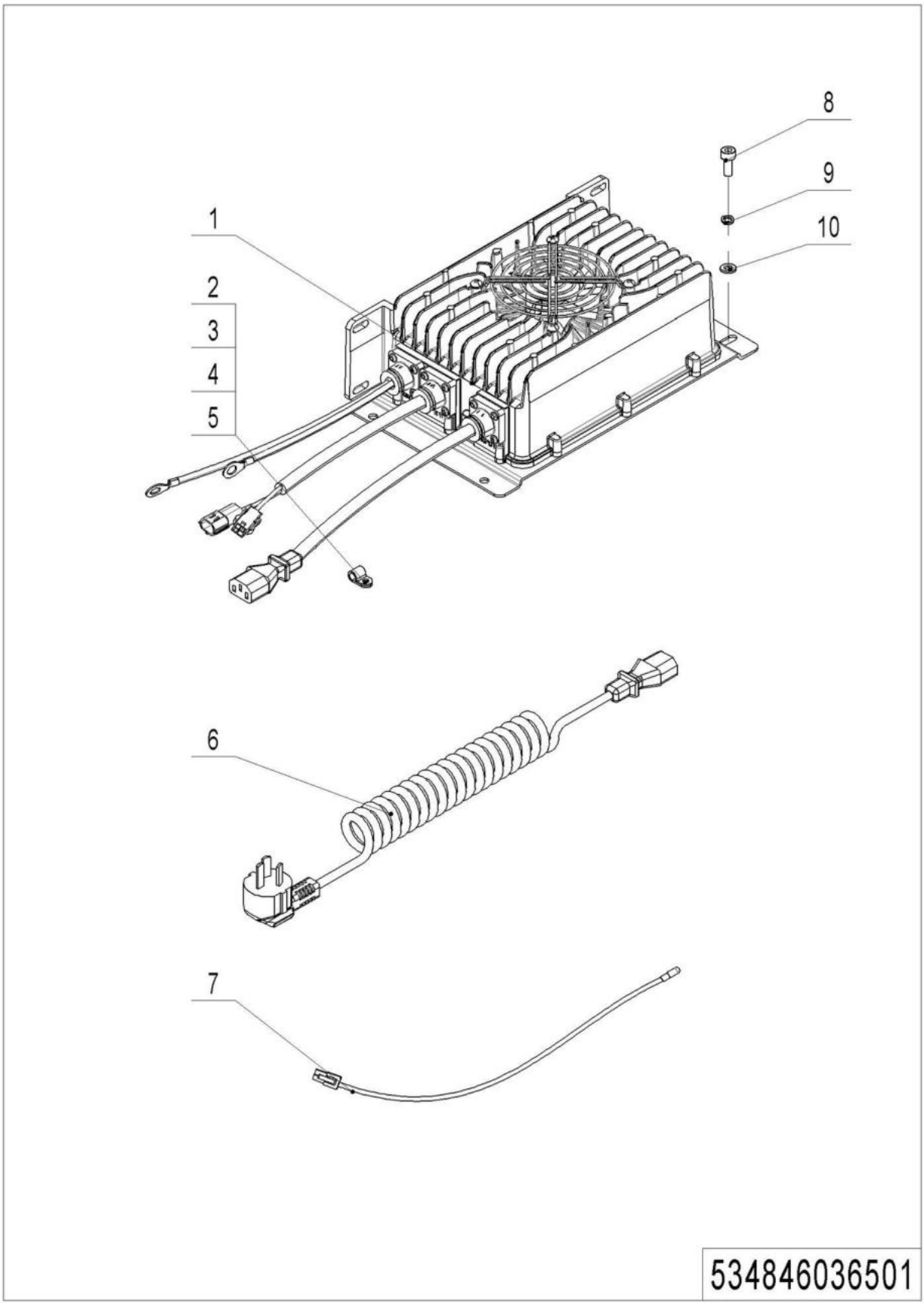

1= Supply as package. 2= Supply with constraints. 3= Phasing-out supply. 4= Supply as assembly. 5= Check other tables.

03 Charger(534846036501)

No.	Item Code	Mark	Item Description	Qty.	Substitute	Note
1	921000100046		Charger24V35A	1		
2	921300200001	1	Cable Clamp	4		
3	910200500034	1	Screw	4		
4	910400100003	1	Flat Washer	4		
5	910400500003	1	Spring Washer	4		
6	921500200031		Spring Cable(USA)	1		
6	921500200008		Spring Cable（Asia）	1		
6	921500200005		Spring Cable(EU)	1		
6	921500200003		Spring Cable(AUS)	1		
6	921500200004		Spring Cable(ENG)	1		
7	922000100020		Lamp	1		
8	910200200033	1	Screw	4		
9	910400500005	1	Spring Washer	4		
10	910400100005	1	Flat Washer	4		

04 Charger(Li) (534846036501)

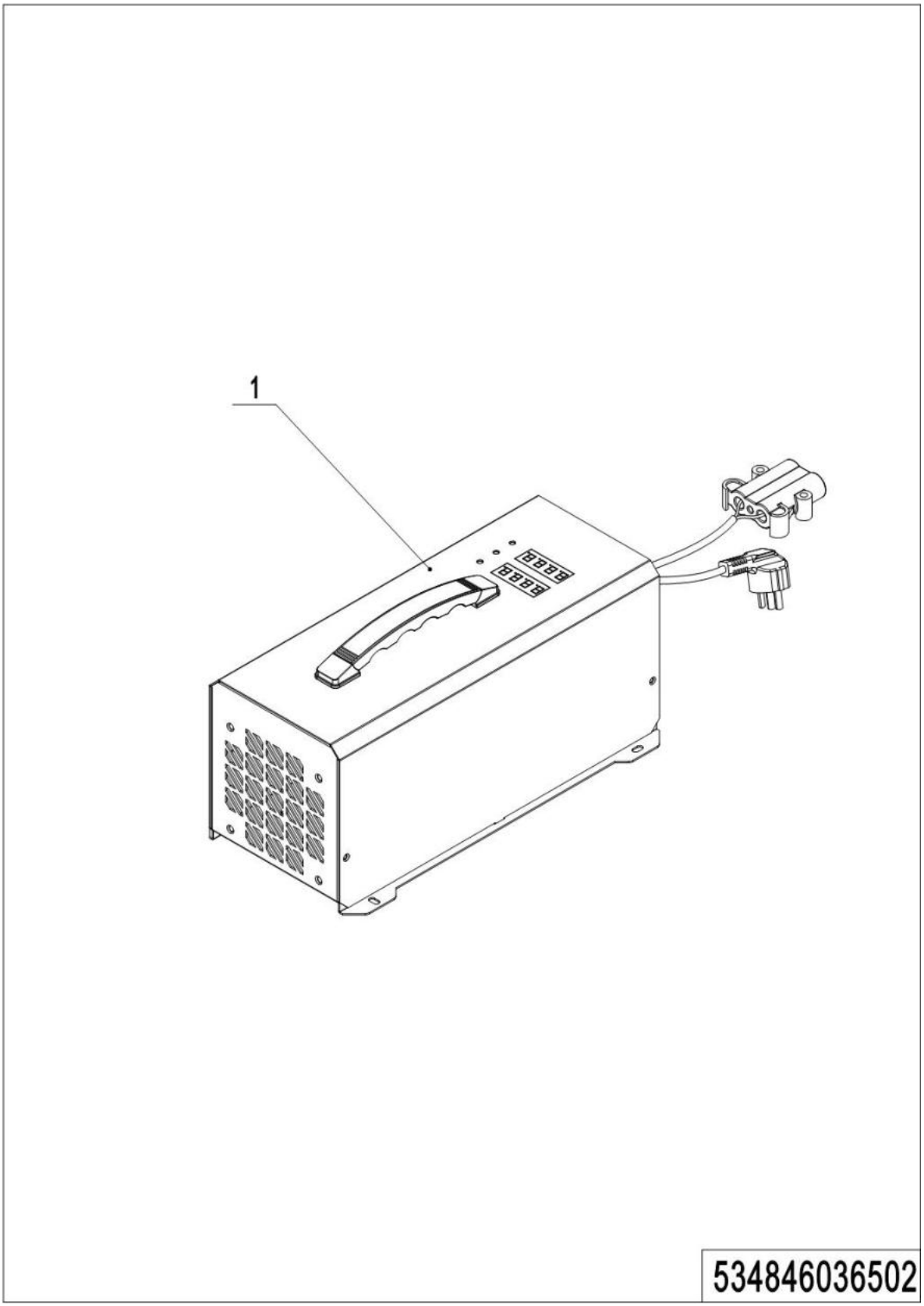

1= Supply as package. 2= Supply with constraints. 3= Phasing-out supply. 4= Supply as assembly. 5= Check other tables.

04 Charger(Li)(534846036502)

No.	Item Code	Mark	Item Description	Qty.	Substitute	Note
1	921000200522		Charger24V60A(Asia-CHN)	1		
1	921000200523		Charger24V60A(Asia-EN)	1		
1	921000200524		Charger24V60A(EU)	1		
1	921000200525		Charger24V60A(ENG)	1		
1	921000200526		Charger24V60A(AUS)	1		
1	921000200527		Charger24V60A((ISR)	1		
1	921000200528		Charger24V60A(ARG)	1		
1	921000200529		Charger24V60A(ZA)	1		
1	921000200530		Charger24V60A(US)	1		
1	921000200531		Charger24V80A(Asia-CHN)	1		
1	921000200663		Charger24V60A(BIGZA)	1		
1	921000200531		Charger24V80A(Asia-CHN)	1		
1	921000200532		Charger24V80A(Asia-EN)	1		
1	921000200533		Charger24V80A(EU)	1		
1	921000200534		Charger24V80A(ENG)	1		
1	921000200535		Charger24V80A(AUS)	1		
1	921000200536		Charger24V80A(ISR)	1		
1	921000200537		Charger24V80A(ARG)	1		
1	921000200538		Charger24V80A(ZA)	1		
1	921000200539		Charger24V8A(US)	1		
1	921000200664		Charger24V80A(BIGZA)	1		

05 Traction Battery (534746037001)

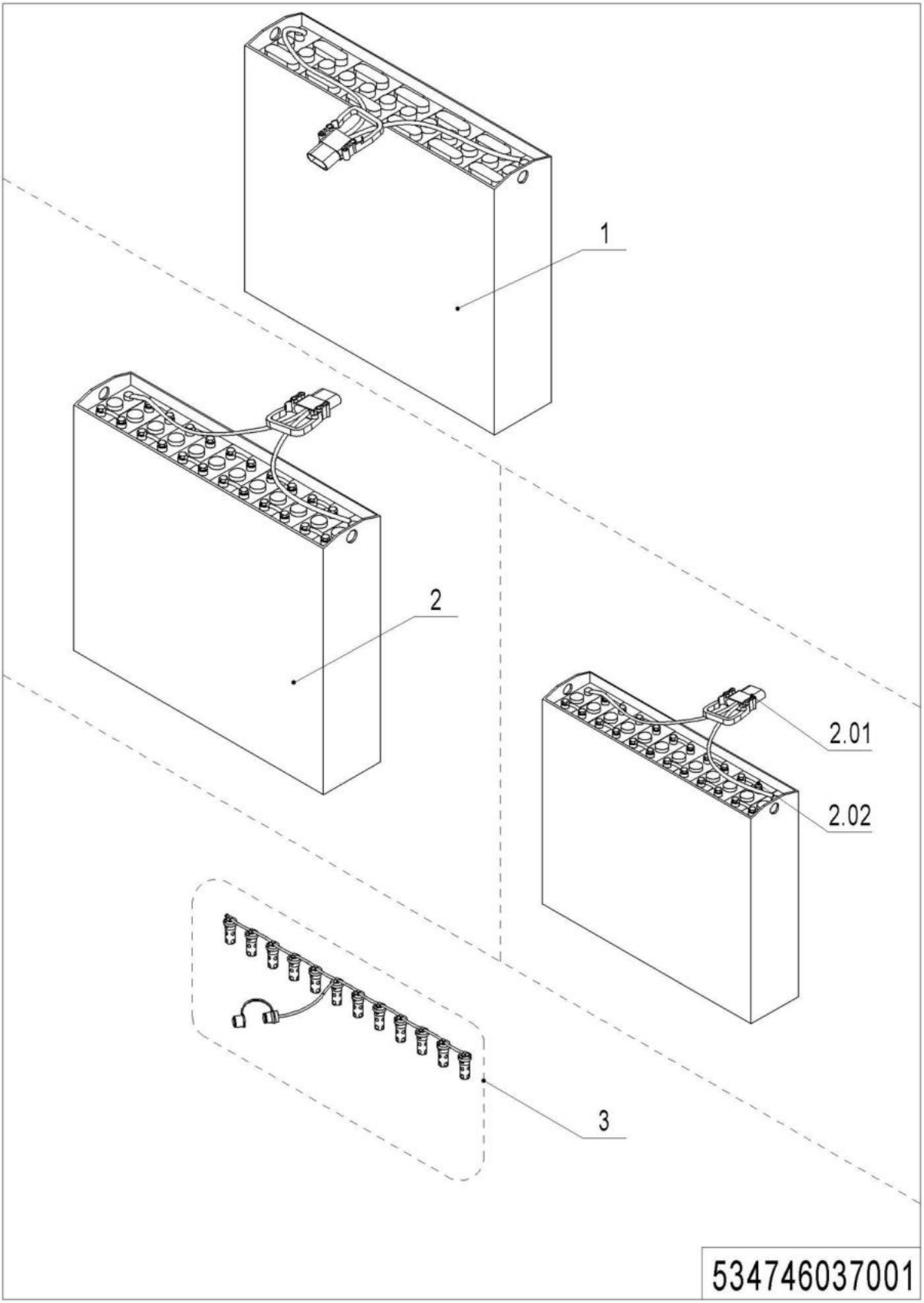

1= Supply as package. 2= Supply with constraints. 3= Phasing-out supply. 4= Supply as assembly. 5= Check other tables.

05 Traction Battery (534746037001)

No.	Item Code	Mark	Item Description	Qty.	Substitute	Note
1	534737010000		Battery24V270Ah(welded)	1		Welded
2	534737010001		Battery24V270Ah	1		Bolted
2.01	920400100007		Connector	1		General Use
2.02	505698520000		Bolt	24		Bolted Only
3	535937110000		Water refilling system	1		Optional

06 Traction Battery (Li) (534846037001)

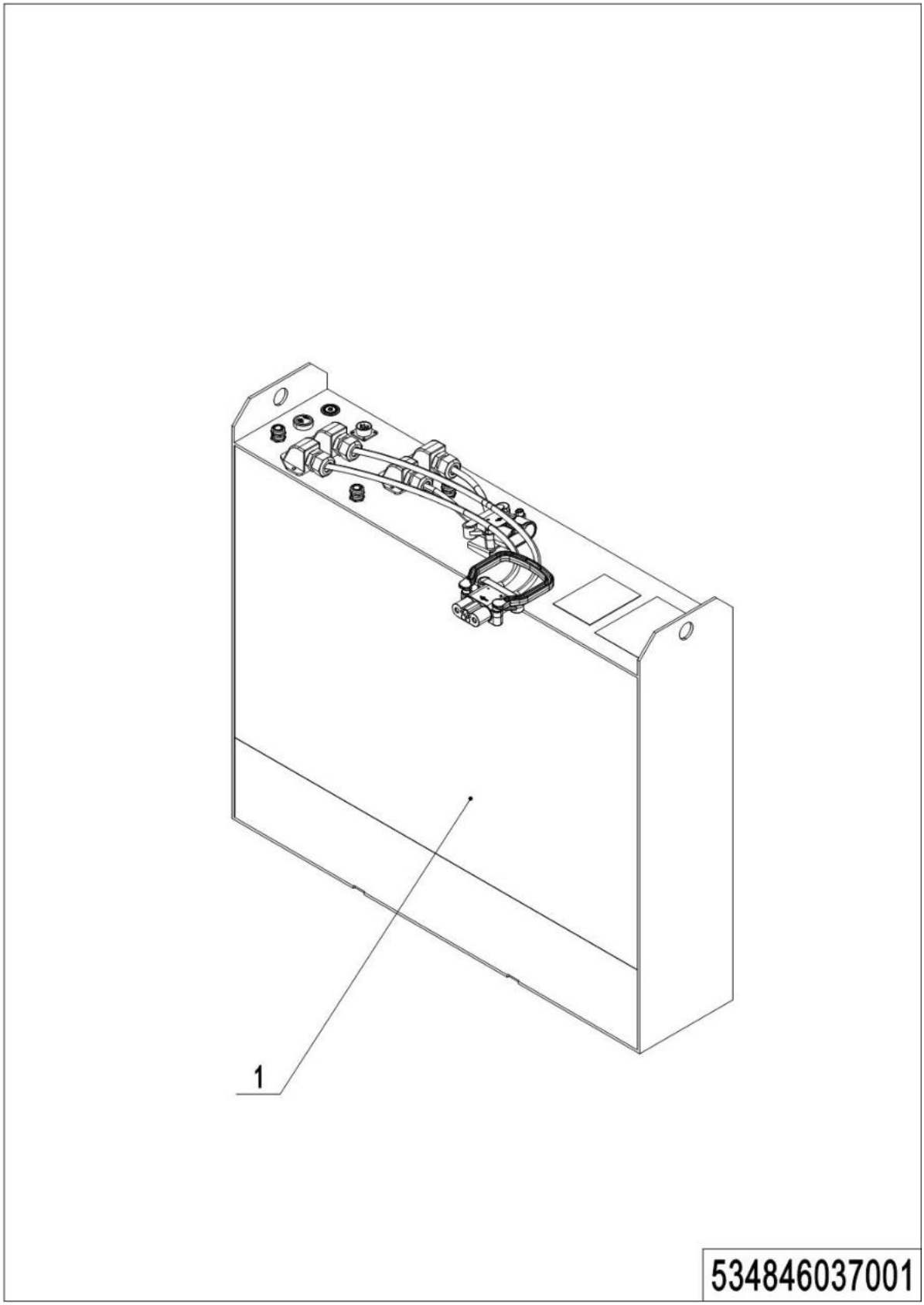

1= Supply as package. 2= Supply with constraints. 3= Phasing-out supply. 4= Supply as assembly. 5= Check other tables.

06 Traction Battery (Li) (534846037001)

No.	Item Code	Mark	Item Description	Qty.	Substitute	Note
1	920600100340	2	Li Battery24V150Ah	1		
2	920600100342	2	Li Battery24V200Ah	1		

07 Display Assembly (534846010001)

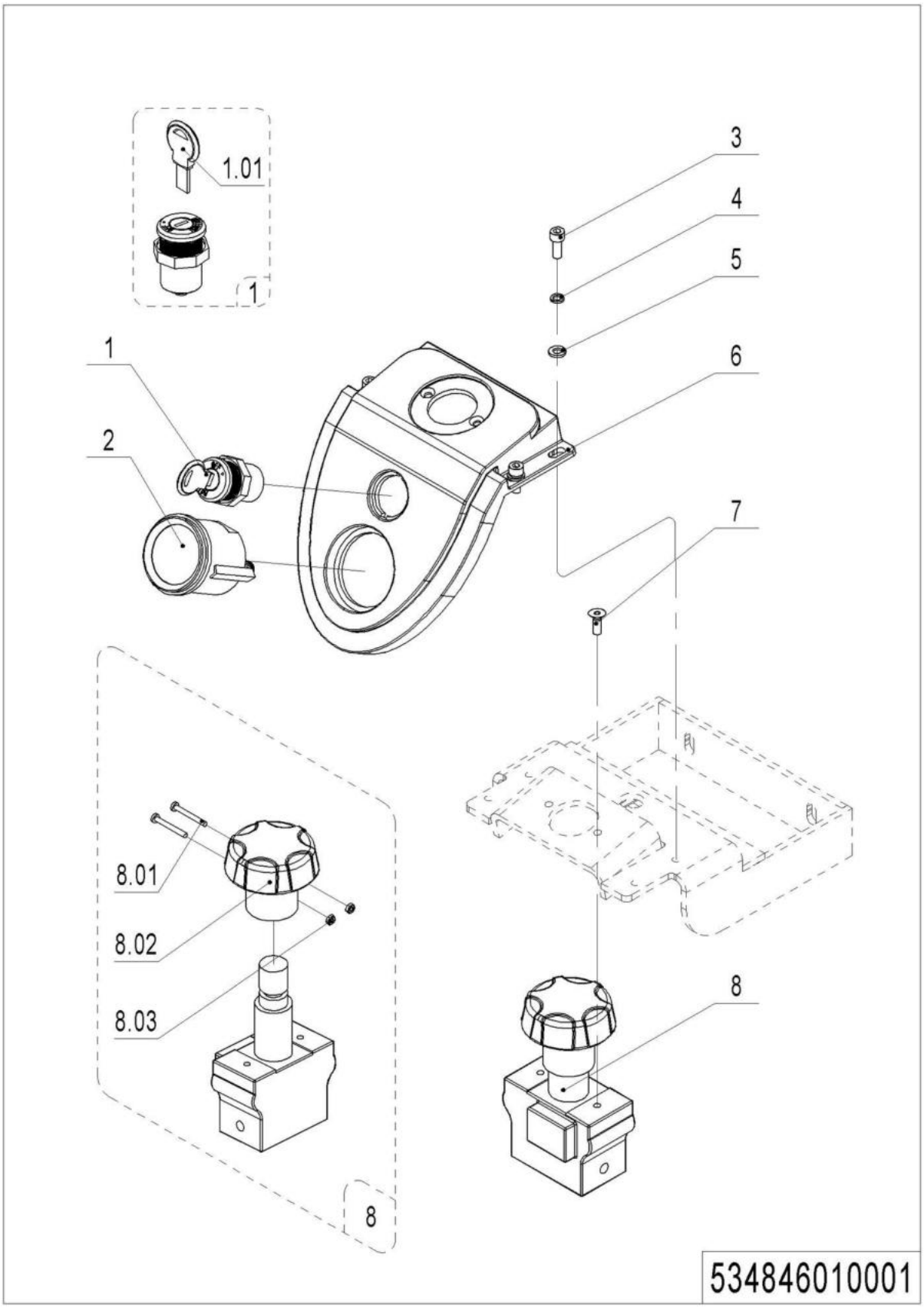

07 Display Assembly(534746037001)

No.	Item Code	Mark	Item Description	Qty.	Substitute	Note
1	920200200025		Key Switch	1		
1	920200200028		Key Switch	1		Li
1.01	403898520003		Key	1		
2	921100100012		Display	1		
3	910200200035	1	Screw	4		
4	910400500005	1	Spring Washer	4		
5	910400100005	1	Flat Washer	4		
6	504410020001	2	Protective Cover	1		
7	910200400011	1	Screw	2		
8	920200100001		Emergency Button	1		
8.01	910200500016	1	Screw	2		
8.02	505698520029		Button	1		
8.03	910300100002	1	Nut	2		

Chapter 7: Special Parts

01 Load Backrest (Optional) (534846040501)

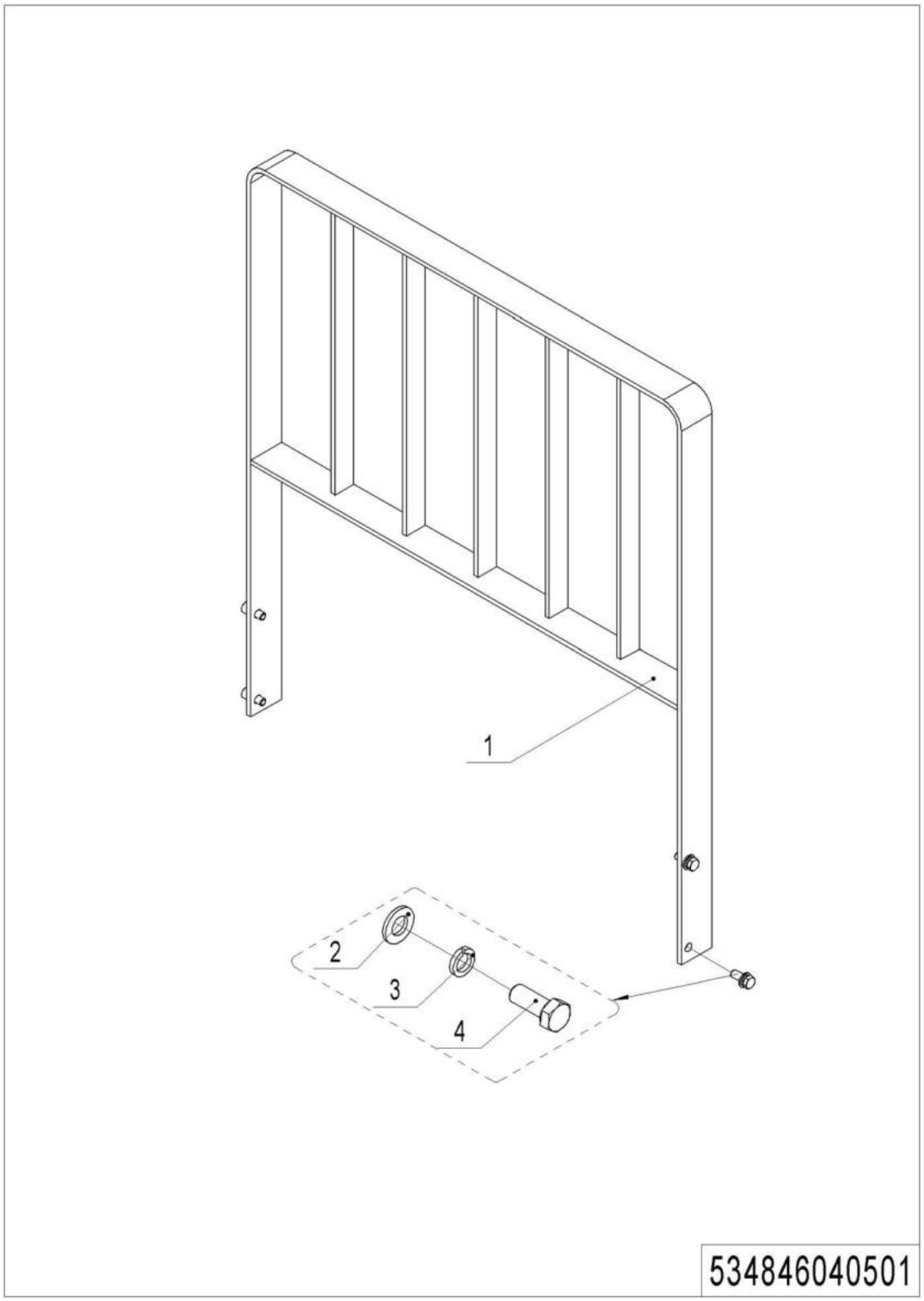

1= Supply as package. 2= Supply with constraints. 3= Phasing-out supply. 4= Supply as assembly. 5= Check other tables.

01 Load Backrest (Optional)(534846040501)

No.	Item Code	Mark	Item Description	Qty.	Substitute	Note
1	534840510000	2	Load Backrest	1		
2	910400100007	1	Flat Washer	4		
3	910400500007	1	Spring Washer	4		
4	910100300037	1	Bolt	4		

02 Load Backrest (Side-shift,Optional) (216546040501)

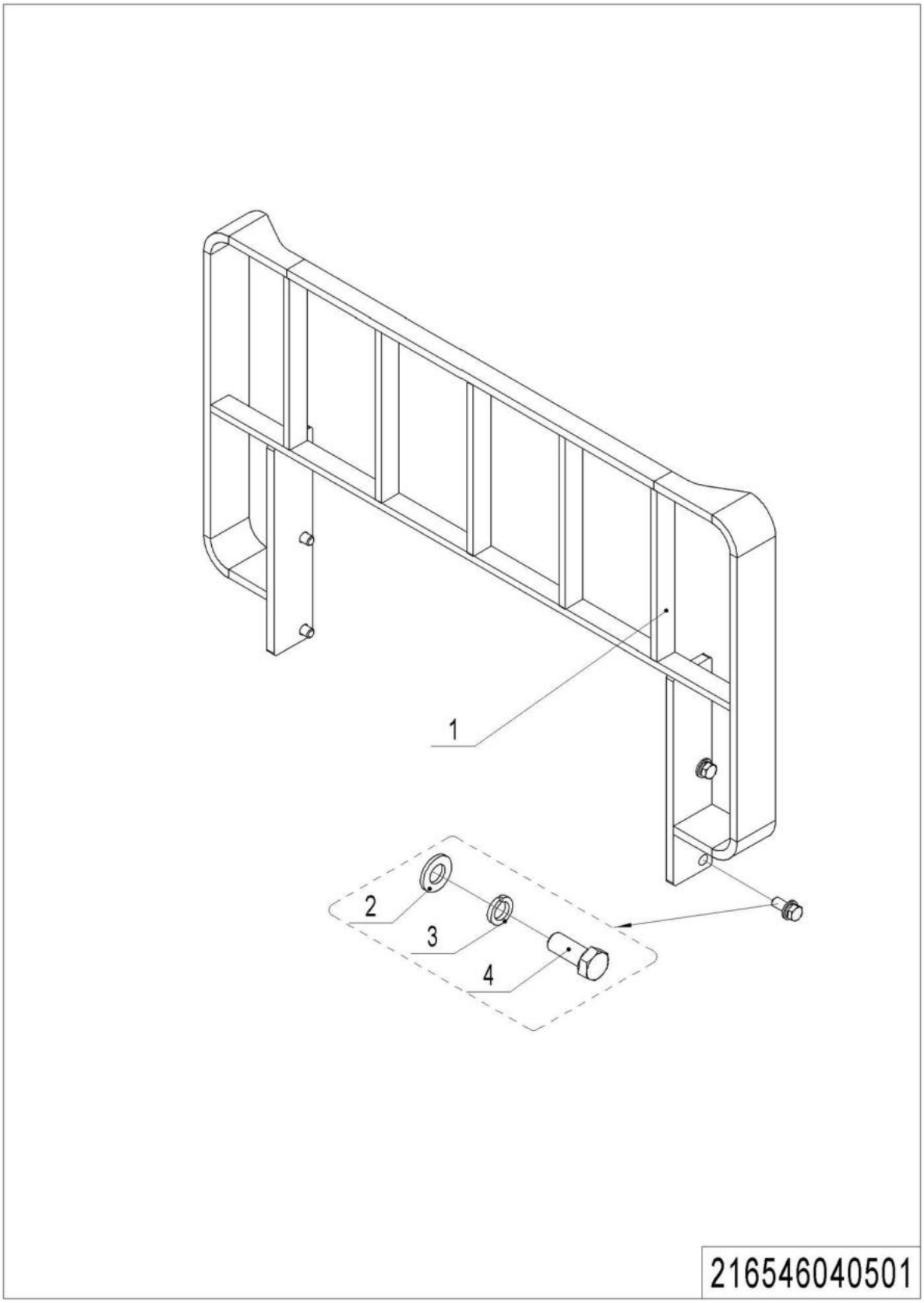

1= Supply as package. 2= Supply with constraints. 3= Phasing-out supply. 4= Supply as assembly. 5= Check other tables.

02 Load Backrest (Side-shift,Optional)(216546040501)

No.	Item Code	Mark	Item Description	Qty.	Substitute	Note
1	216540510001	2	Load Backrest	1		
2	910400100008	1	Flat Washer	4		
3	910400500008	1	Spring Washer	4		
4	910100300050	1	Bolt	4		

03 Side-shifter (216546042501)

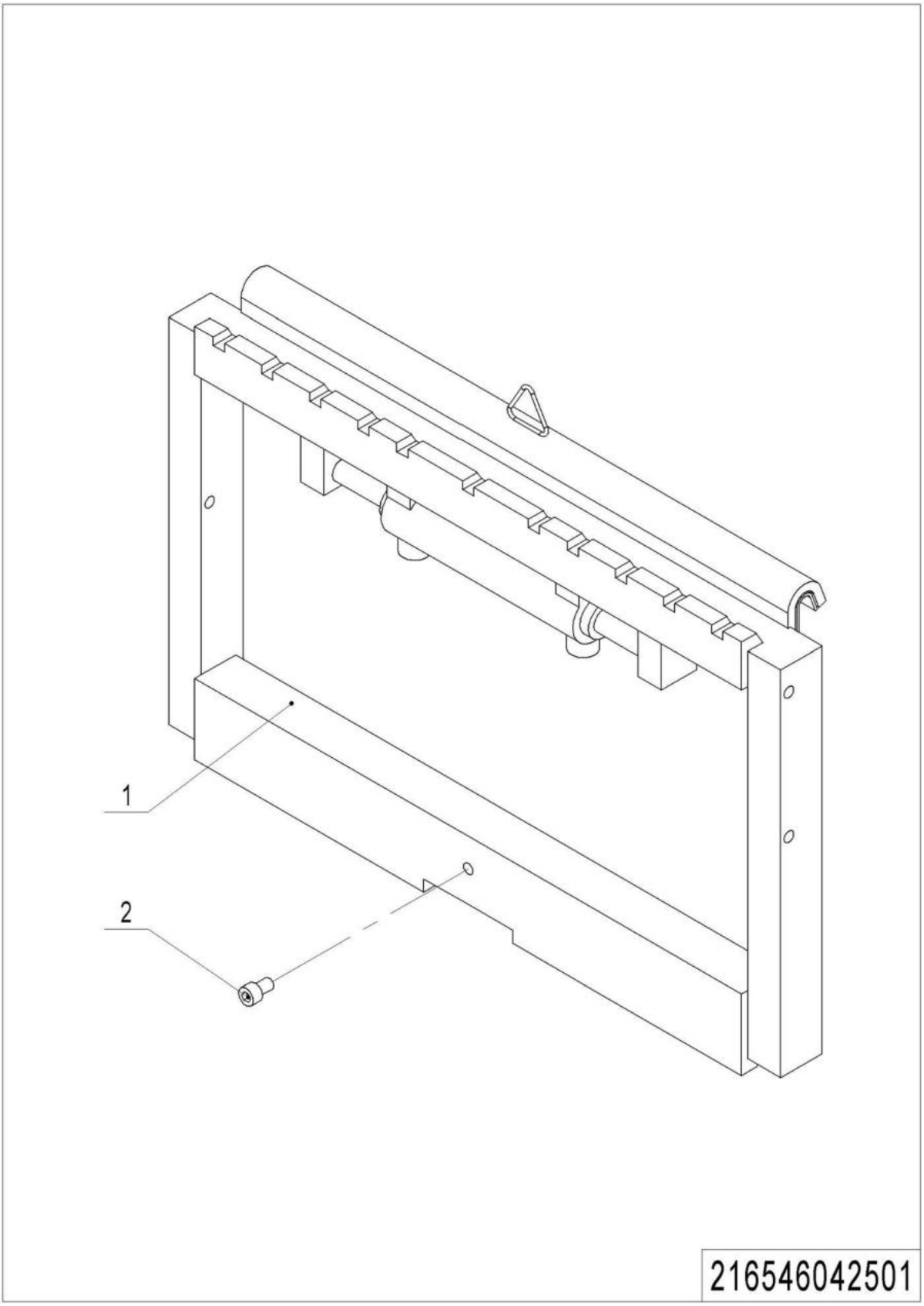

1= Supply as package. 2= Supply with constraints. 3= Phasing-out supply. 4= Supply as assembly. 5= Check other tables.

03 Side-shifter (216546042501)

No.	Item Code	Mark	Item Description	Qty.	Substitute	Note
1	940100200008		Side Shifter	1		
2	910200200074	1	Screw	1		

Chapter 8: Others

01 Label and Decal (EU) (535146047001)

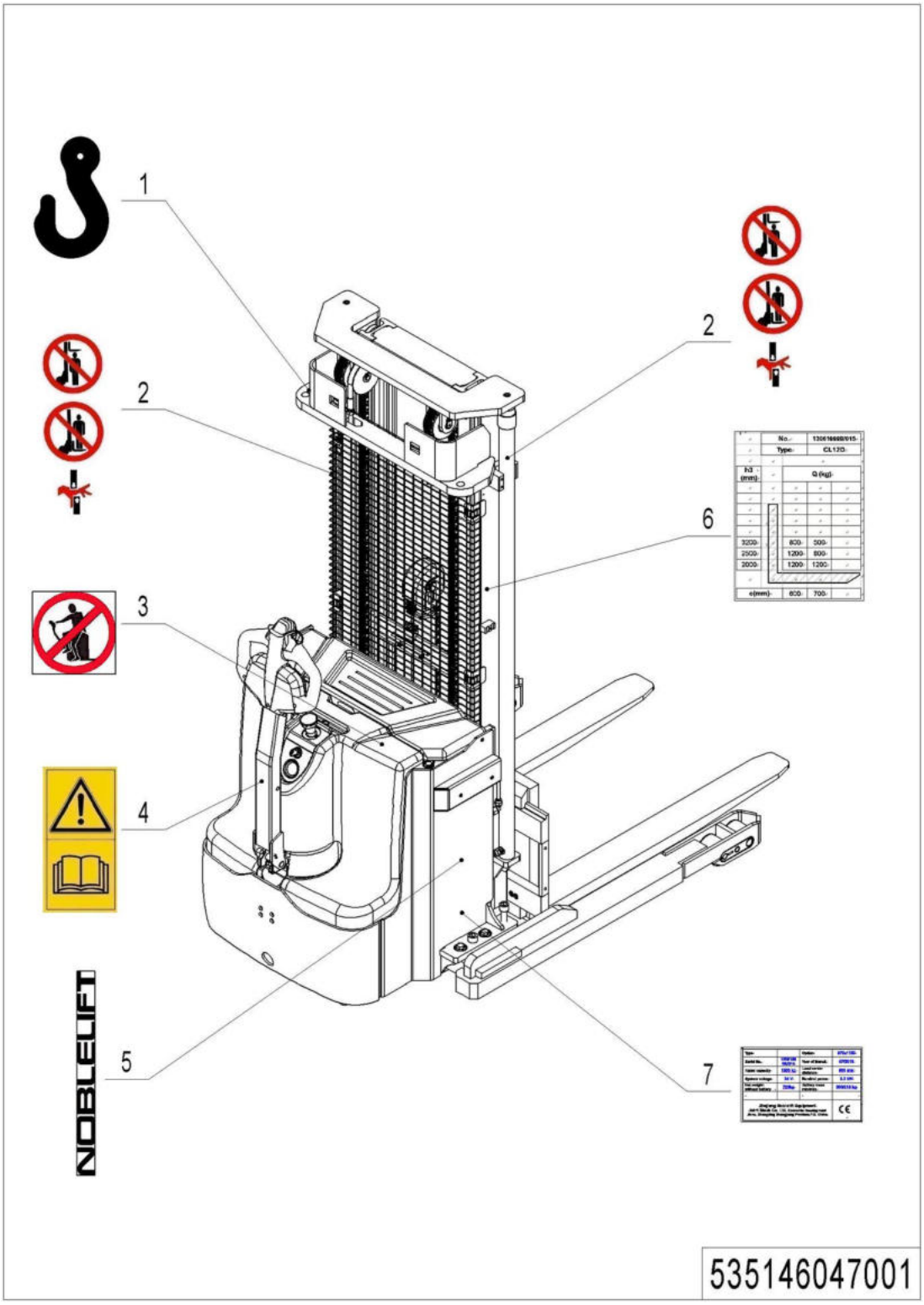

1= Supply as package. 2= Supply with constraints. 3= Phasing-out supply. 4= Supply as assembly. 5= Check other tables.

01 Label and Decal (EU)(535146047001)

No.	Item Code	Mark	Item Description	Qty.	Substitute	Note
1	941200300001		Label	2		
2	941200100004		Label	2		
3	941200100003		Label	1		
4	941200300002		Label	1		
5	941200500001		Label	2		
6	535147502002		Load Capacity Diagram	2		Depends On Customer
7	535147502001		Truck data plate	1		

02 Label and Decal (USA)(535146047002)

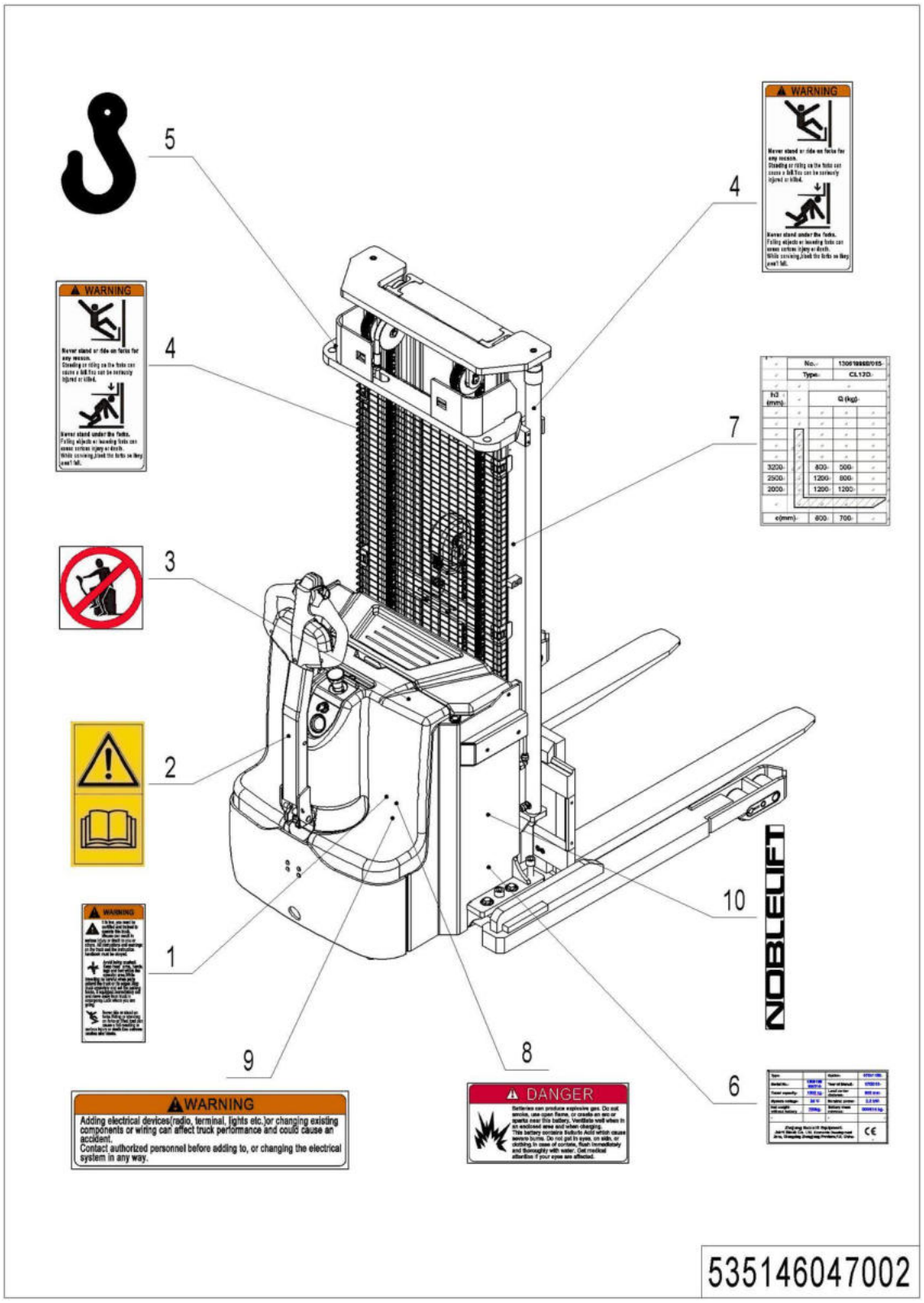

1= Supply as package. 2= Supply with constraints. 3= Phasing-out supply. 4= Supply as assembly. 5= Check other tables.

02 Label and Decal (USA)(535146047002)

No.	Item Code	Mark	Item Description	Qty.	Substitute	Note
1	941200100009		Label	1		
2	941200300002		Label	1		
3	941200100003		Label	1		
4	941200100016		Label	1		
5	941200300001		Label	2		
6	535147502001		Truck data plate	1		
7	535147502002		Load Capacity Diagram	2		
8	941200100013		Label	1		
9	941200100010		Label	1		
10	941200500001		Label	2		Depends On Customer

Appendix

01 Electrical Circuit Diagram (534846045501)

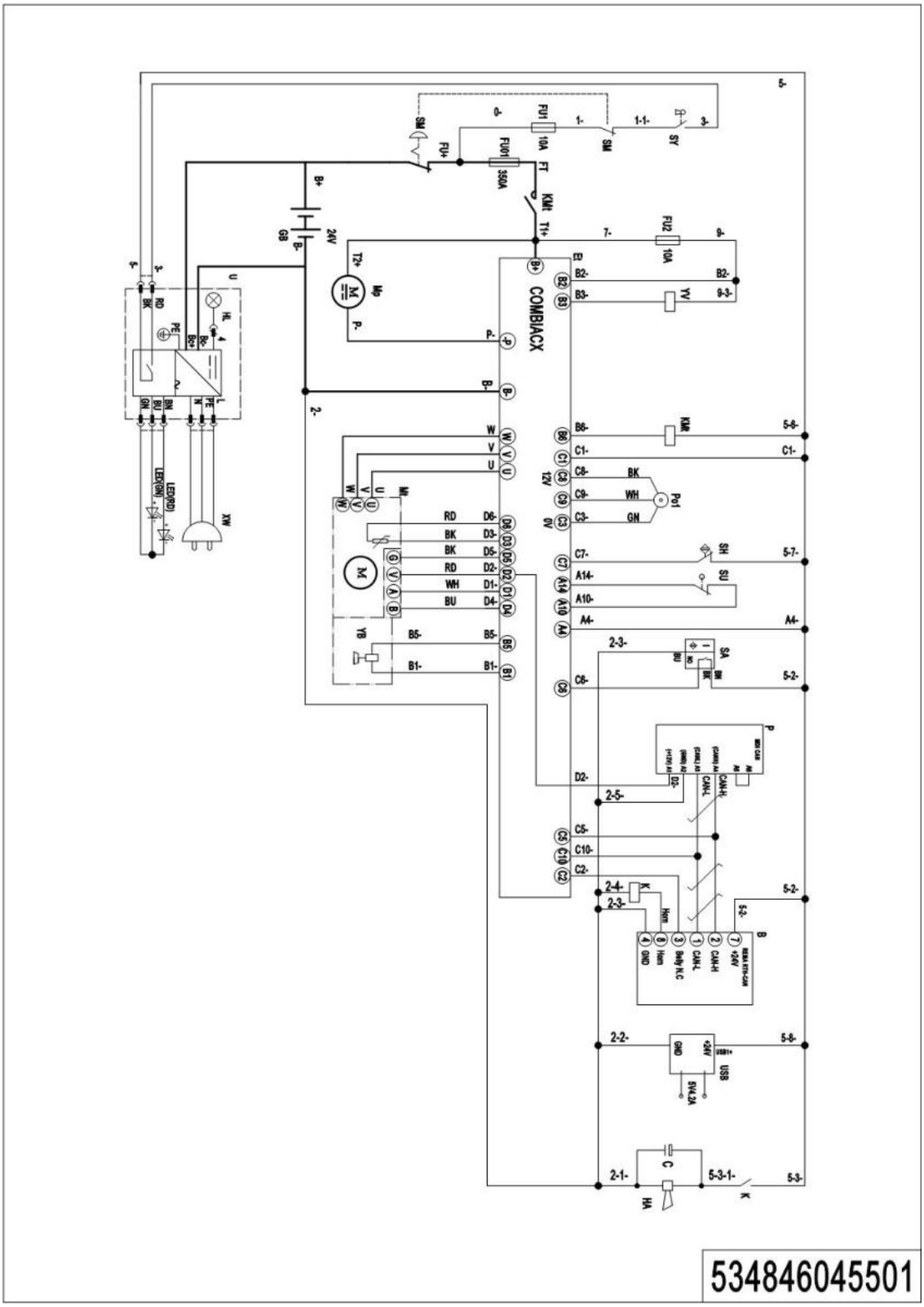

02 Electrical Circuit Diagram (Side-shift) (534846045502)

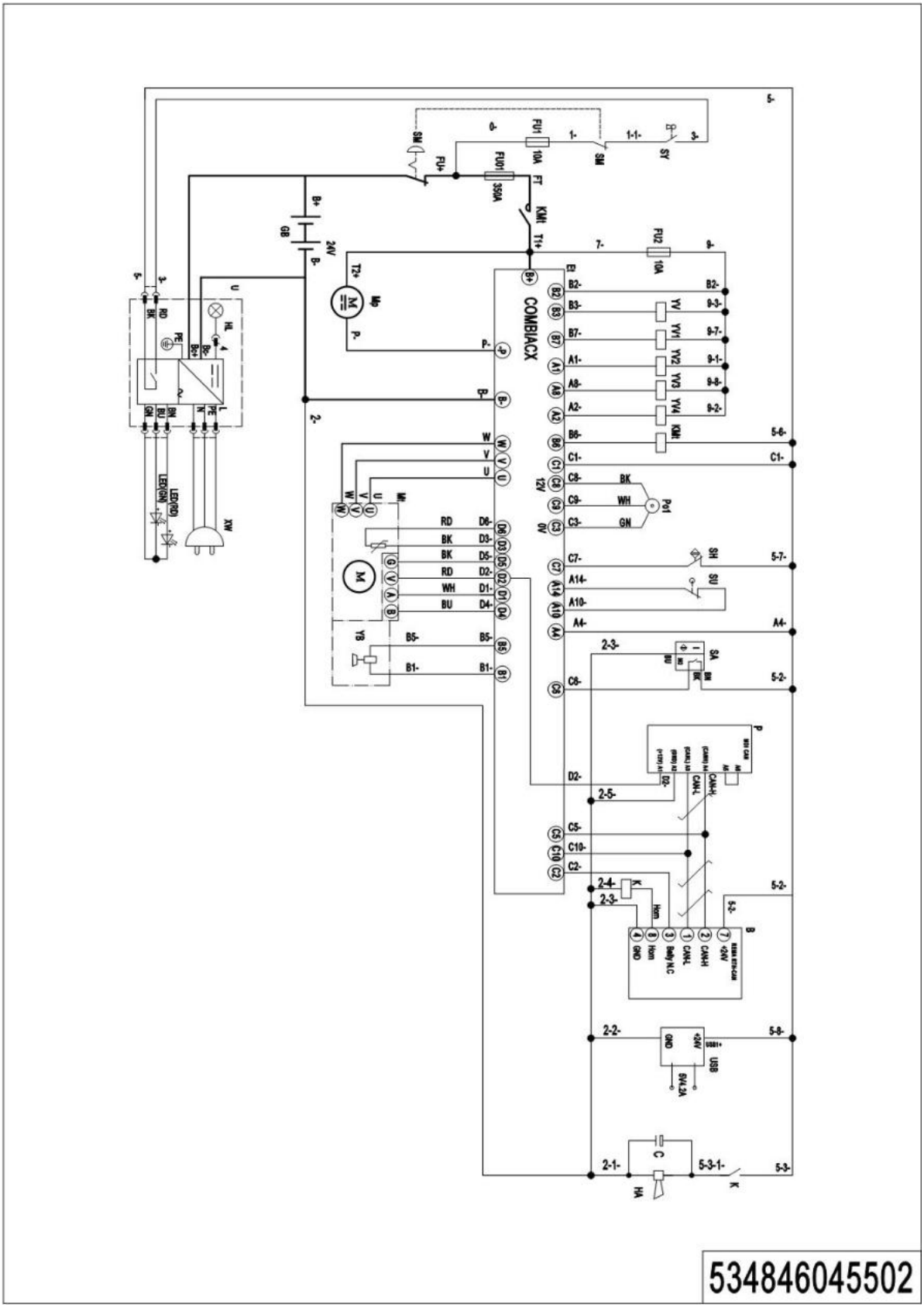

03 Electrical Circuit Diagram(Li) (534846045503)

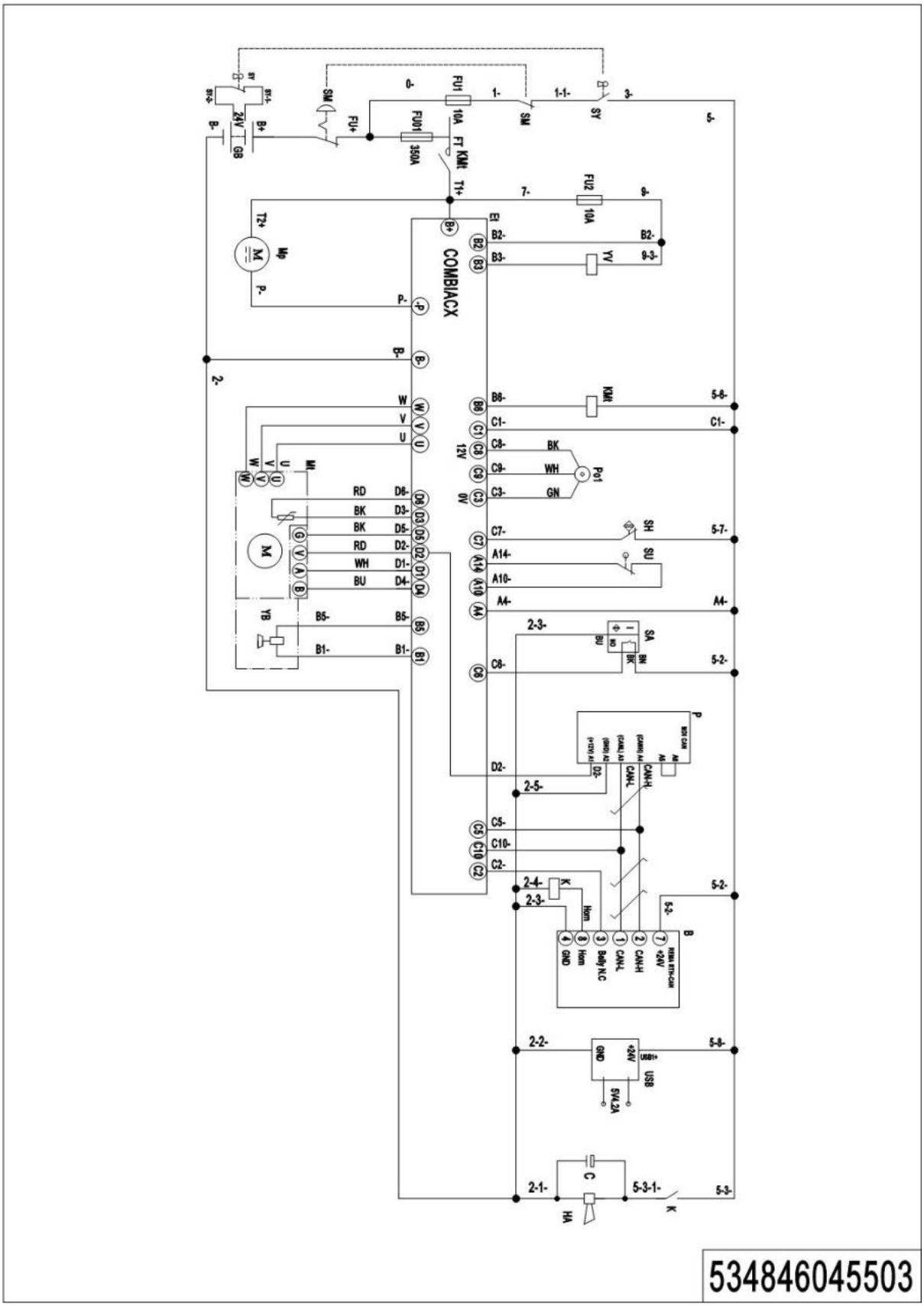

04 Electrical Circuit Diagram (Side-shift,Li)(534846045504)

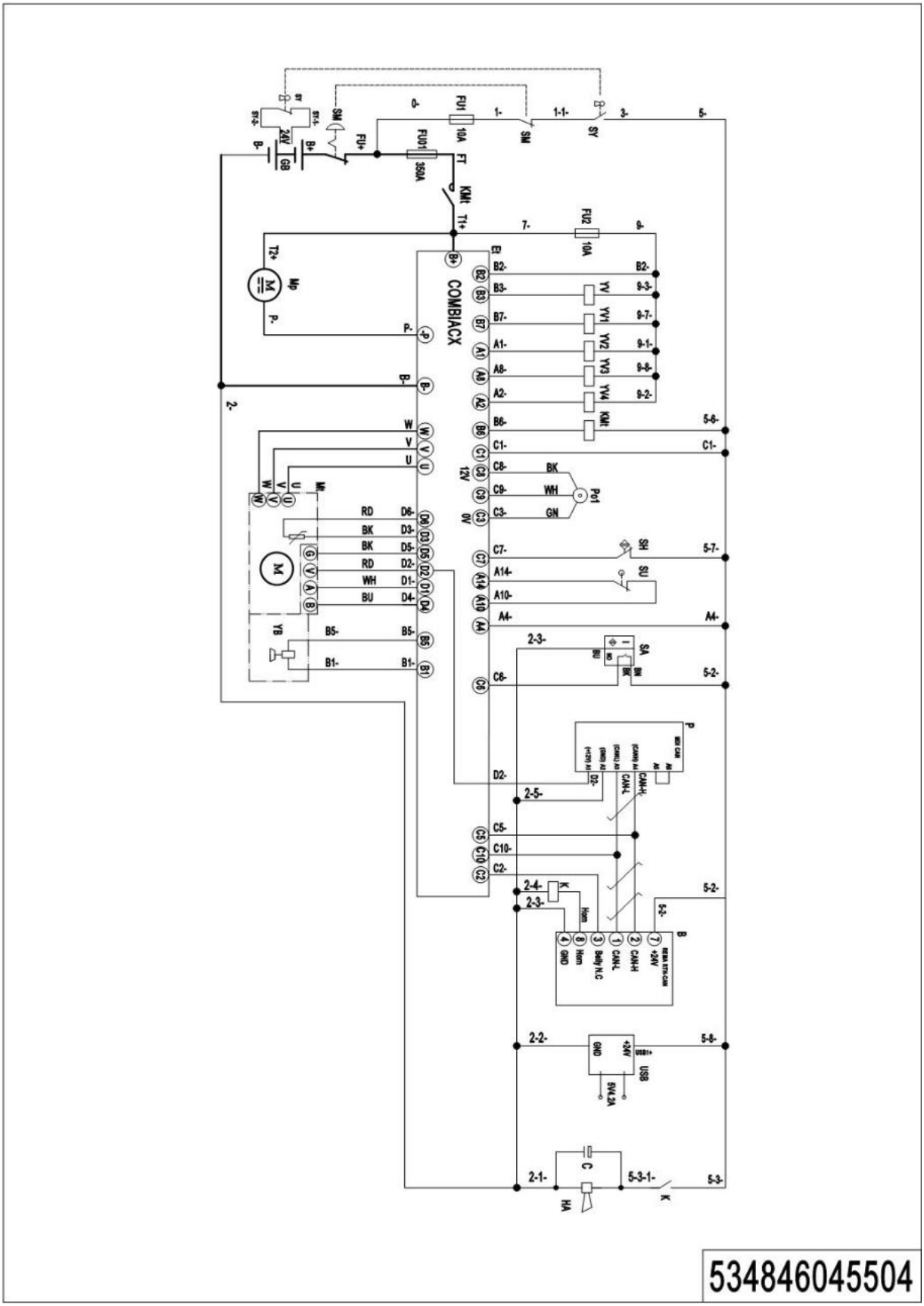

1= Supply as package. 2= Supply with constraints. 3= Phasing-out supply. 4= Supply as assembly. 5= Check other tables.

05 Hydraulic Circuit Diagram (534846045507)

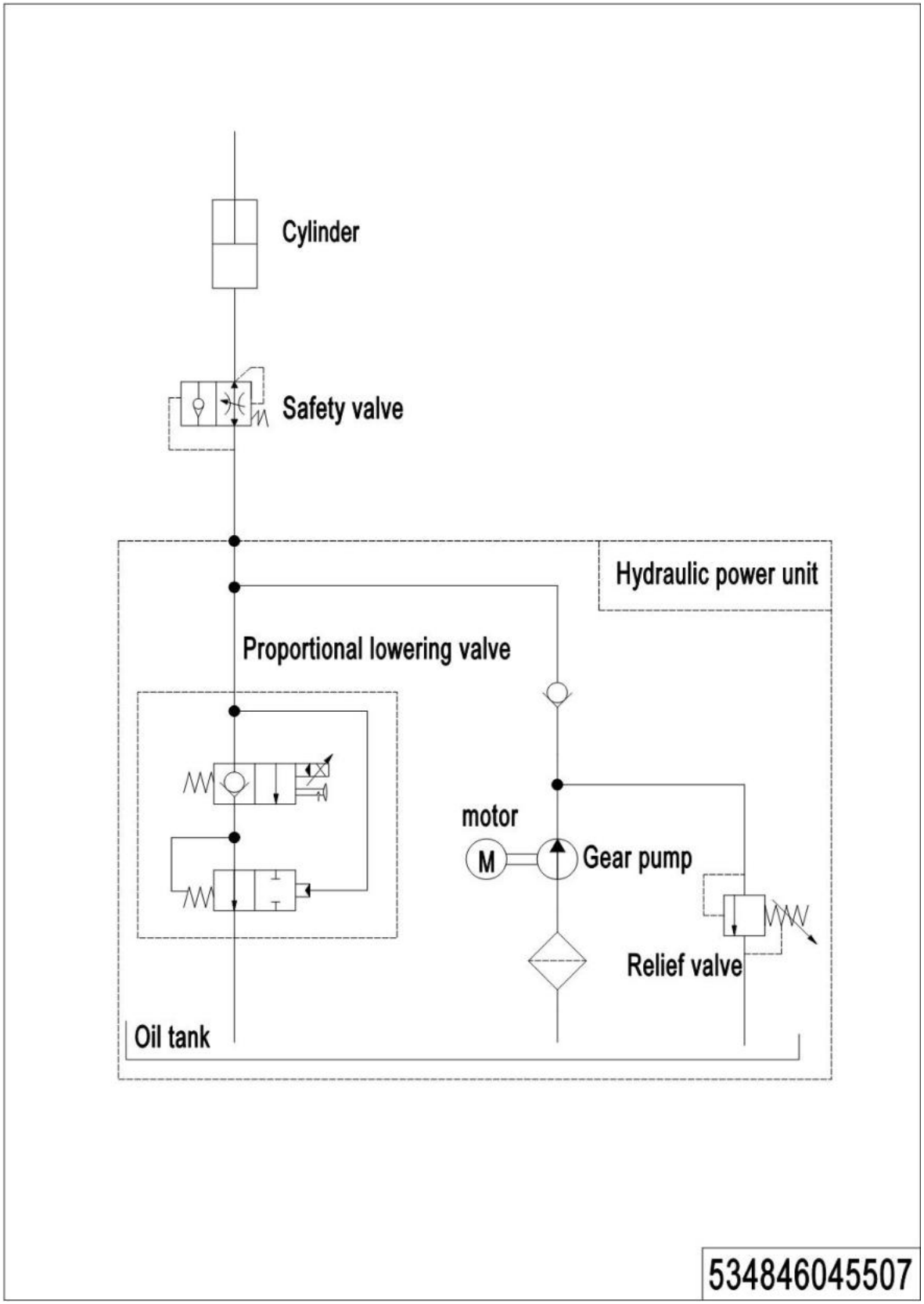

06 Hydraulic Circuit Diagram (Side-shift) (534846045508)

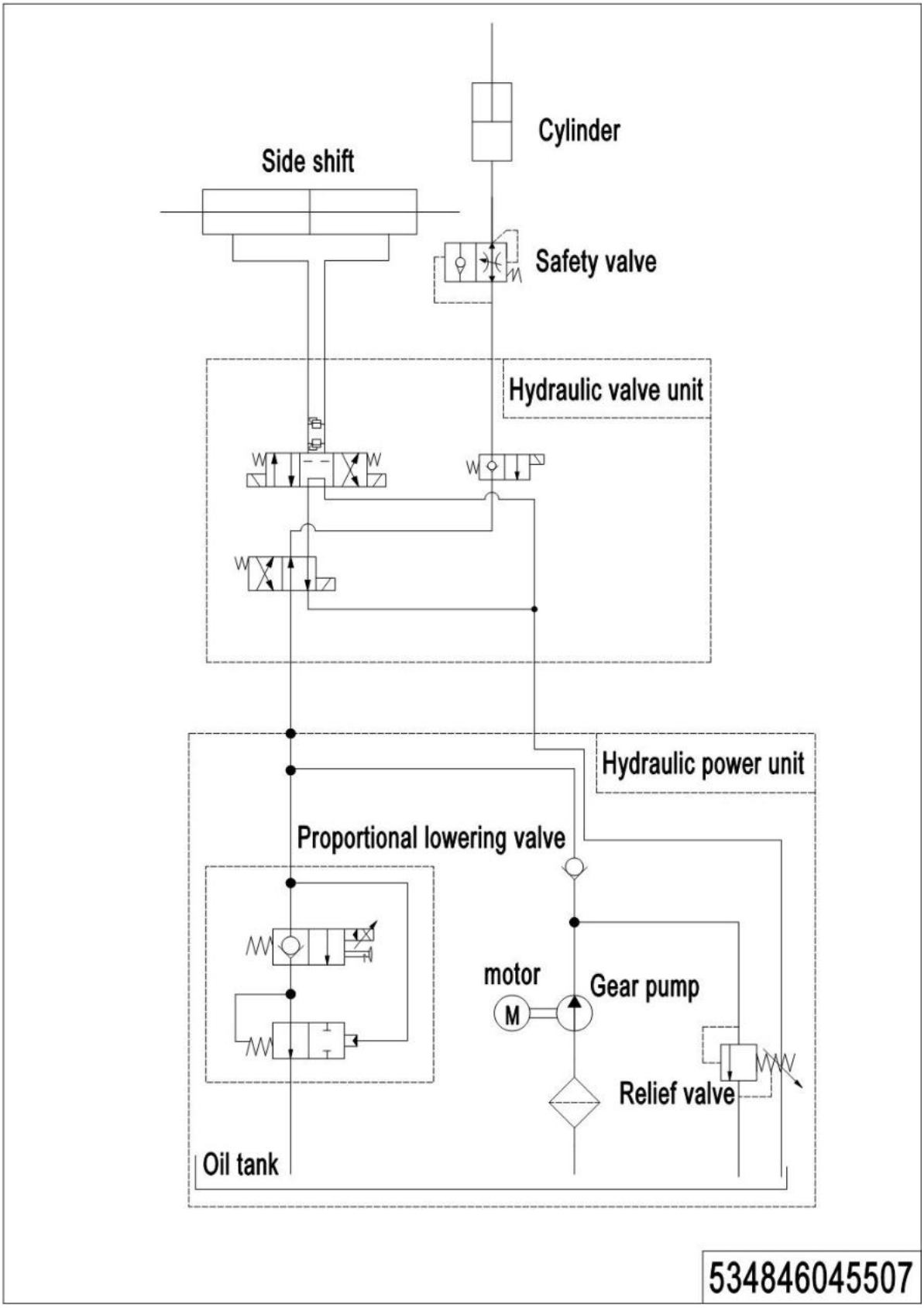

07 Consumable Parts List

No.	Item Code	Item Description	Qty.	Chapter/ Section/ Number
1	534798520026	Carbon Brush	1	Chapter 2/03/2
2	535098510002	Seal Kit	2	Chapter 4/01/18.01
3	534798510003	Seal Kit	1	Chapter 4/01/43.01
4	535098510003	Seal Kit	2	Chapter 4/02/16.01 Chapter 4/03/16.01
5	535098510000	Seal Kit	2	Chapter 4/04/29.01 Chapter 4/05/37.01
6	534798510001	Seal Kit	1	Chapter 4/04/52.01 Chapter 4/05/66.01
7	535098510001	Seal Kit	1	Chapter 4/06/20.01
8	940400100011	Air Spring	1	Chapter 5/01/9
9	910700200019	Bearing	12	Chapter 5/03/4.01 Chapter 5/04/18.02
10	940300300009	WheelΦ84x70	4	Chapter 5/03/4.02
11	940300300018	WheelΦ100x40	2	Chapter 5/04/18.01
12	910700500002	Bearing	2	Chapter 5/04/6
13	920100100013	Fuse	1	Chapter 6/01/14 Chapter 6/02/14
14	920100200002	Fuse	2	Chapter 6/01/17 Chapter 6/02/17

1= Supply as package. 2= Supply with constraints. 3= Phasing-out supply. 4= Supply as assembly. 5= Check other tables.