Print Number: Print Date:

NOBLELIFT

Scan QR Code for More

Electric Pallet Stacker PS16DL

PARTS MANUAL

562046010101

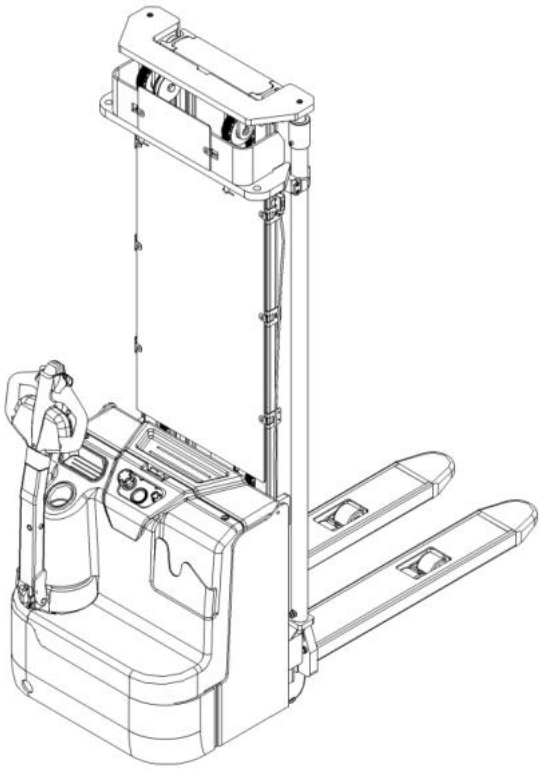

Version V03

Truck Identification Number From:

Parts Manual

PS16DL-PM04EN

Please order parts from authorized dealers of Noblelift Intelligent Equipment Co., LTD.

In order to avoid wrong delivery, all the orders for spare parts should specify the following items:

- Truck model, identification number and manufacture year.
- Orders for spare parts of mast, hydraulic transmission unit, steering axle, motor, etc. shall indicate the manufacture number of these parts.
- Codes for Noblelift spare parts are shown in the table of parts manual. Please also pay attention to the description of supply status, order quantity, etc. (check the number listed in "Mark" column of the parts manual).

"Mark" Column:

The unmarked indicates the parts are in short supply cycle.

Number 1: supply as package. Indicating these that parts are small parts and seal parts, which are supplied in package unit and in short supply cycle.

Number 2: supply with constraints. Indicating that these spare parts are not in stock and will be prepared for production after receiving the order from customers, which are in long supply cycle.

Number 3: phasing-out supply. Indicating that these parts will be replaced by new parts due to technical improvements and the current stock will not be available when these parts run out. Please check the description of technical improvements notice.

Number 4: supply as assembly. Indicating that these parts are assembly parts defined by manufacture process, which cannot be supplied as a single part.

Number 5: check other tables.

This parts manual is the property of Noblelift and can be shared under the confidential agreement only, Noblelift has the right to claim for compensation of any unauthorized use. Copy without permission is not allowed. Figures in the manual are not limited by the original design. Noblelift Intelligent Equipment Co., LTD reserves the right to improve the products for continuous technology progress.

Table of Contents

Chapter 1: Drive System 1
01 Drive Unit (535046013501) 1
02 Drive Unit 1.7kW (535046013502) 3
Chapter 2: Hydraulic System 5
01 Hydraulic Pipeline (562045024001) 5
01 Hydraulic Pipeline (562045024001) Continuation 7
02Hydraulic Unit 24V3.2KW4.0cc (534746023501) 9
Chapter 3: Truck Frame 11
01 Truck body (561746021501) 11
02 Chassis assembly (562046038501) 13
03 Chassis assembly (sideways) (562046038502) 15
04 Fork Carriage (562046038001) 17
05 Pull rod assembly (561746038501) 19
Chapter 4: Mast System 21
01 Two-stage Mast Standard Lift (535946044001) 21
01 Two-stage Mast Standard Lift (535946044001) Continuation 23
02 Two-stage mast full free lift (535946043501) 25
02 Two-stage Mast Full Free Lift (535946043501) Continuation 1 27
02 Two-stage Mast Full Free Lift (535946043501) Continuation 2 29
03 Triple Mast Standard Lift (535946045001) 31
03 Triple Mast Standard Lift (535946045001) Continuation 33
04 Triple Mast Full Free Lift (535946044501) 35
04 Triple Mast Full Free Lift (535946044501) Continuation 1 37
04 Triple Mast Full Free Lift (535946044501) Continuation 2 39
04 Triple Mast Full Free Lift (535946044501) Continuation 3 41
04 Triple Mast Full Free Lift (535946044501) Continuation 4 43
Chapter 5: Steering System, Braking System, Wheels 45
01 Handle assembly (504446011001) 45

02 Control Handle (505646011004) 47
02 Control Handle (505646011004) Continuation 49
03 Load Wheel (561746017001) 51
04 Caster (534746016501) 53
Chapter 6: Electrical Parts 55
01 Display Assembly (534746010001) 55
02 Electronic Components (561746033001) 57
02 Electronic Components (EN1175:2020) (561746033011) 59
03 Electric control assembly (EN1175:2020) (561746033011) 59
04 Charger (534746036501) 63
05 充电器 锂电(534446036502) 65
06 Traction Battery (534746037001) 67
07 牵引电池 锂电 (534446037002) 69
Chapter 7: Special Parts 70
01 Load Backrest (532646040501) 71
Chapter 8: Others 73
01 Label and Decal (EU) (562046047001) 73
02 Label and Decal (US) (562046047002) 75
Appendix 77
01 Electrical Circuit Diagram (561746045510) 77
01 Electrical Circuit Diagram (EN1175:2020) (561746045511) 78
02 Hydraulic Circuit Diagram (561746045502) 79
03 Consumable Parts List 80

Chapter 1: Drive System

01 Drive Unit (535046013501)

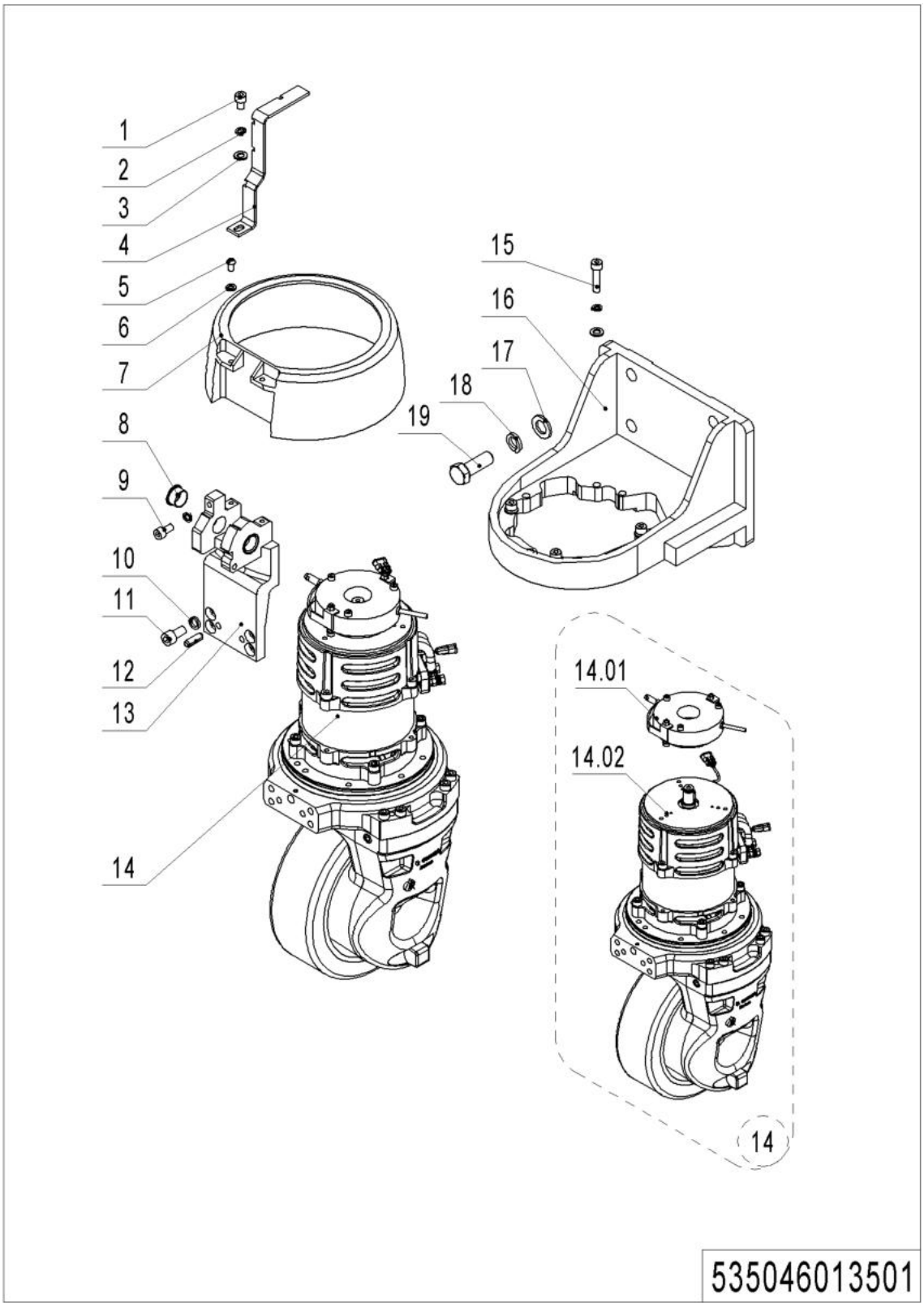

01 Drive Unit (535046013501)

No.	Item Code	Mark	Item Description	Qty.	Substitute	Note
1	910200200053	1	Screw	1		
2	910400500006	1	Spring Washer	5		
3	910400100006	1	Flat Washer	5		
4	534713520002		Fixing Mount	1		
5	910200300017	1	Screw	2		
6	910400100005	1	Flat Washer	2		
7	534713520003		Protective Cover	1		
8	940500200005		Bushing	2		
9	910200200055	1	Screw	1		
10	910400500007	1	Spring Washer	4		
11	910200200075	1	Screw	4		
12	910600400044	1	Spring Pin	2		
13	534713520001		Bracket	1		
14	535098510006		Drive Unit	1		
14.01	940700100001		Brake	1		
14.02	940900400003	5	Drive Unit	1		**See 535046013001**
15	910200200060	1	Screw	4		
16	534713520000		Wheel Mount	1		
17	910400100010	1	Flat Washer	4		
18	910400500010	1	Spring Washer	4		
19	910100300071	1	Bolt	4		

1= Supply as package. 2= Supply with constraints. 3= Phasing-out supply. 4= Supply as assembly. 5= Check other tables.

02 Drive Unit 1.7kW (535046013502)

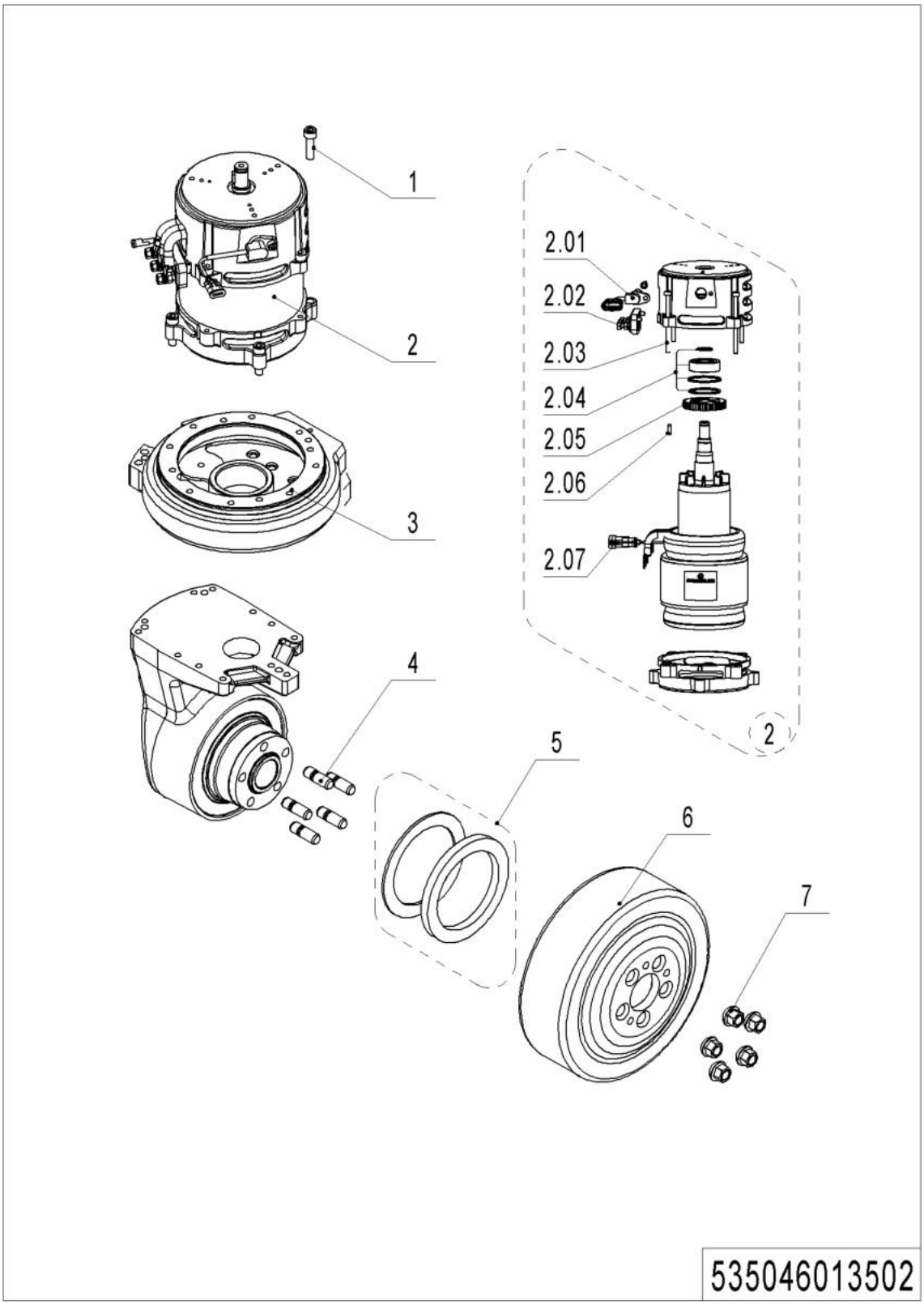

1= Supply as package. 2= Supply with constraints. 3= Phasing-out supply. 4= Supply as assembly. 5= Check other tables.

02 Drive Unit 1.7kW (535046013502)

No.	Item Code	Mark	Item Description	Qty.	Substitute	Note
1	504498520016	1	Screw	4		
2	535098510004	2	Motor	1		
2.01	535098520041		Sensor	1		
2.02	535098520042		Wiring Board	1		
2.03	535098520043		Screw	4		
2.04	535098510005		Motor Kit	1		
2.05	535098520044		Sensor	1		
2.06	504498520011		Feather Key	1		
2.07	535098520045		Sensor	1		
3	504498510002	2	Rotary Table Kit	1		
4	504498520005	2	Bolt	5		
5	504498510003	2	Seal Kit	1		
6	940300400005		WheelΦ230x70	1		
7	504498520003	1	Nut	5		

Chapter 2: Hydraulic System

01 Hydraulic Pipeline (562045024001)

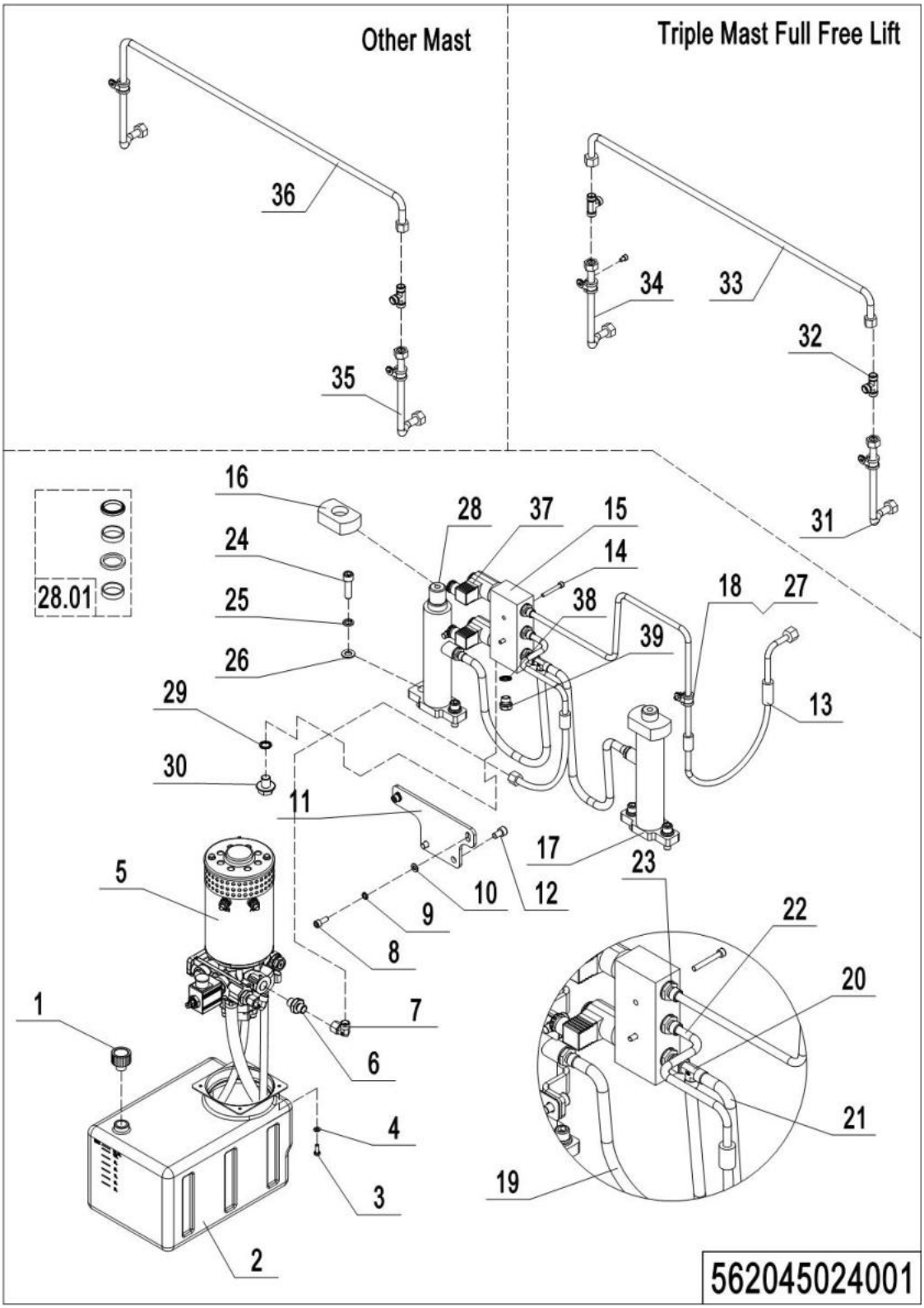

1= Supply as package. 2= Supply with constraints. 3= Phasing-out supply. 4= Supply as assembly. 5= Check other tables.

01 Hydraulic Pipeline (562045024001)

No.	Item Code	Mark	Item Description	Qty.	Substitute	Note
1	951100200004		Screw Plug	1		
2	534719010001		Tank Kit	1		
3	910100300010		Bolt	4		
4	910400100005		Flat Washer	4		
5	950900100015		Pump Unit	1		See 534746023501
6	950400300005		Joint	1		
7	950400200003		Joint	1		
8	910200200057		Screw	2		
9	910400500006		Spring Washer	2		
10	910400100006		Flat Washer	2		
11	534719020001		Mounting Plate	1		
12	910200200075		Screw	2		
13	562024520002		Hose	1		
14	910200200042		Screw	2		
15	560824520003		Valve Block	1		
16	562024520008		Subplate	2		
17	562024510001		Cylinder	2		
18	910200200032		Screw	6		
19	562024520004		Hose	1		
20	950401000003		Joint	1		
21	562024520005		Hose	1		
22	561724520001		Hose	1		
23	950400400003		Joint	5		
24	910200200100		Screw	4		
25	910400500008		Spring Washer	4		
26	910400100008		Flat Washer	4		
27	951000100001		Hose Clamp	3		
28	562024510001		Cylinder	2		
28.01	562098510001		Seal Kit	2		

1= Supply as package. 2= Supply with constraints. 3= Phasing-out supply. 4= Supply as assembly. 5= Check other tables.

01 Hydraulic Pipeline (562045024001) Continuation

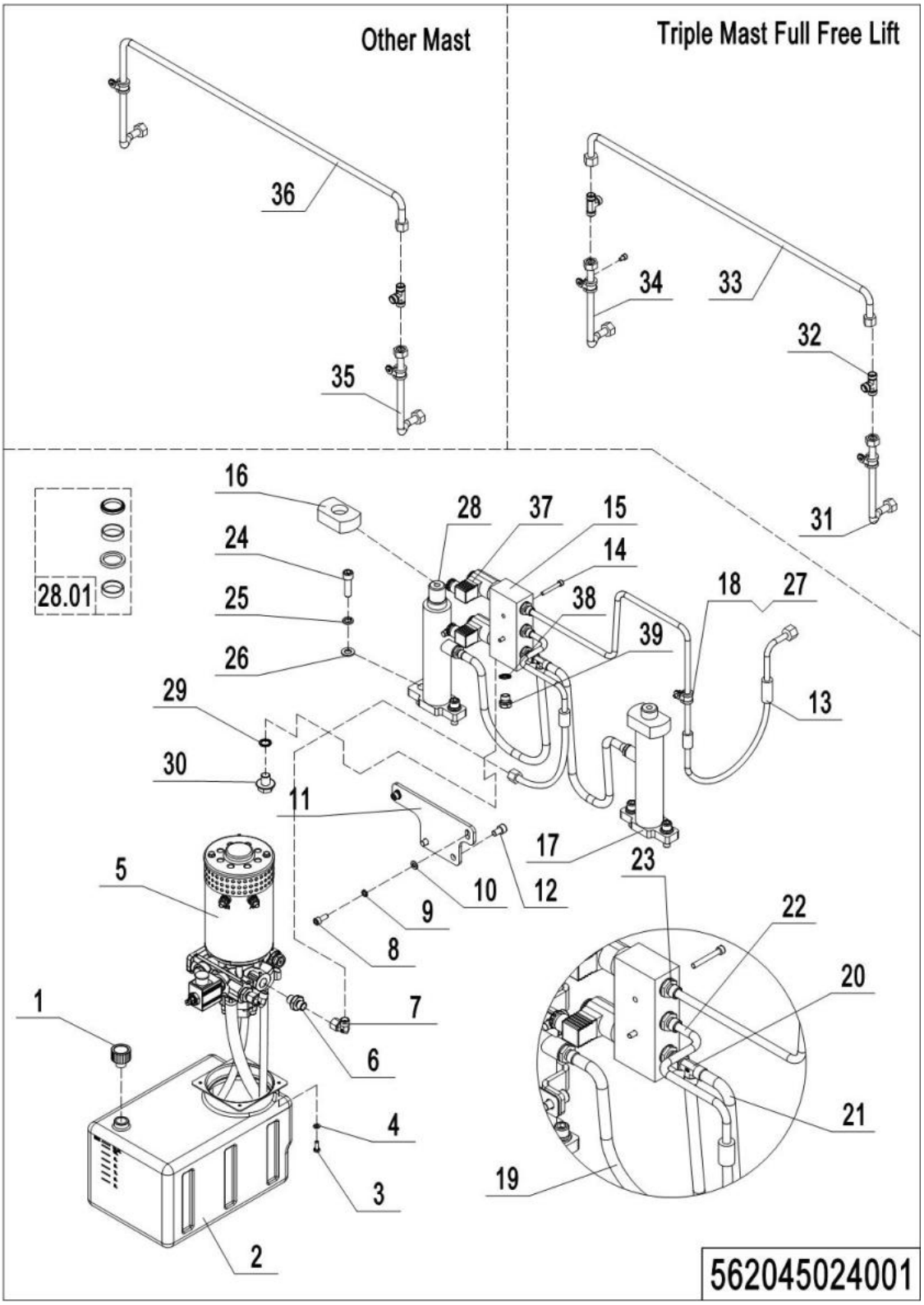

01 Hydraulic Pipeline (562045024001) Continuation

No.	Item Code	Mark	Item Description	Qty.	Substitute	Note
29	910800900005		Bonded Washer	1		
30	911300100001		Screw Plug	1		
31	534724010006		Steel Tube	1		
32	950400700002		Joint	2		Triple mast
32	950400700002		Joint	1		Two-stage mast
33	534724010000		Steel Tube	1		
34	534724010005		Steel Tube	1		
35	534724010006		Steel Tube	1		Triple mast
35	534724010007		Steel Tube	1		Two-stage mast
36	534724010009		Steel Tube	1		Triple mast
36	534724010008		Steel Tube	1		Two-stage mast
37	950700200003		Valve	2		
38	910800900005		Bonded Washer	1		
39	911300100001		Screw Plug	1		

02Hydraulic Unit 24V3.2KW4.0cc (534746023501)

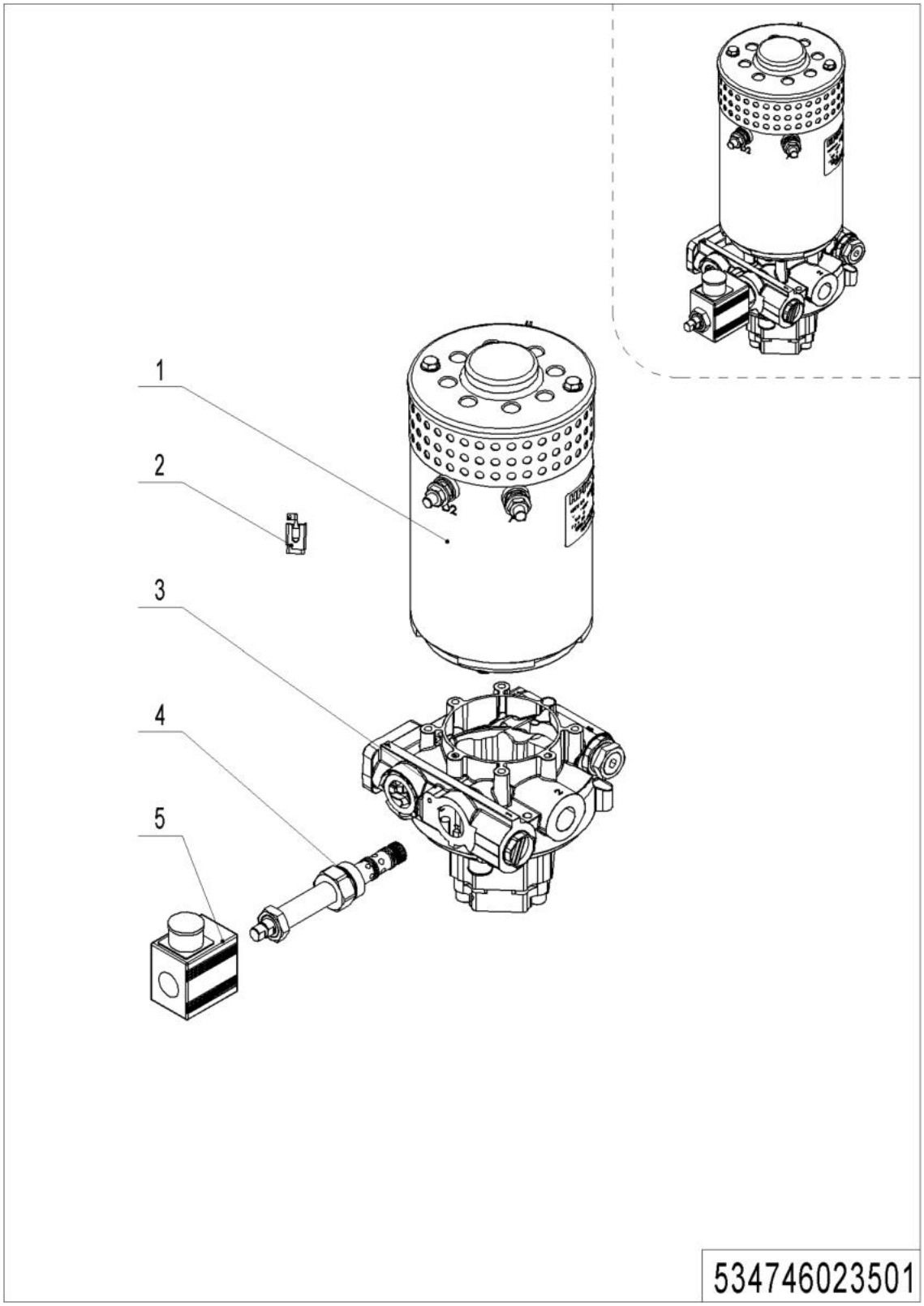

1= Supply as package. 2= Supply with constraints. 3= Phasing-out supply. 4= Supply as assembly. 5= Check other tables.

02 Hydraulic Unit 24V3.2KW4.0cc (534746023501)

No.	Item Code	Mark	Item Description	Qty.	Substitute	Note
--	950900100015		Pump Unit	1		
1	534798510006	2	Motor	1		
2	534798520026	2	Carbon Brush	1		
3	534798510007	2	Valve Block	1		
4	534798520024	2	Magnetic Valve	1		**Provide with coil**
5	534798520025	2	Coil	1		**Provide with valve**

Chapter 3: Truck Frame

01 Truck body (561746021501)

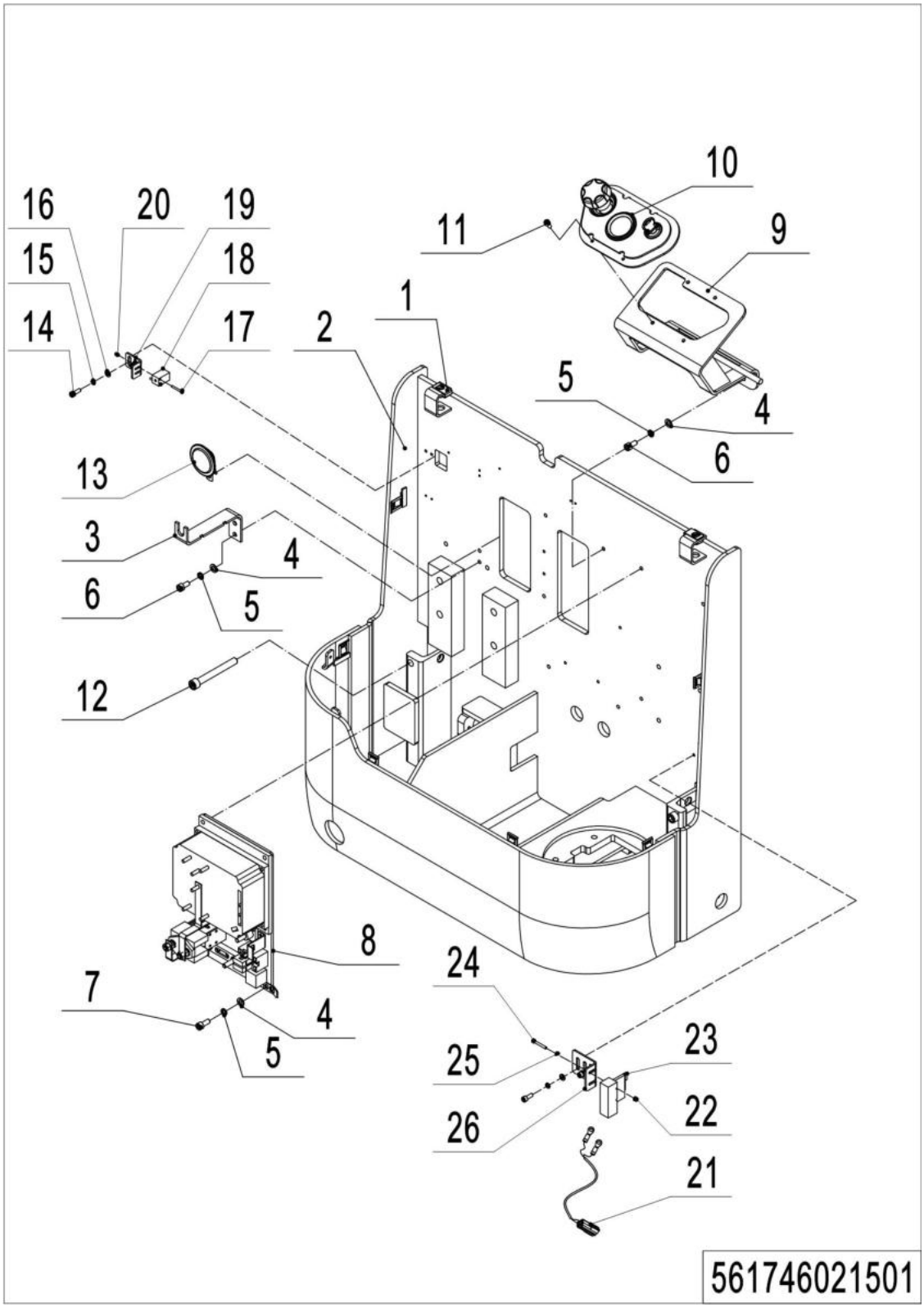

01 Truck body (561746021501)

No.	Item Code	Mark	Item Description	Qty.	Substitute	Note
1	940400400003		Cage Nut	2		
2	562021510001		Chassis(570x1150)	1		
2	562021510002		Chassis(685x1150)	1		
3	534721520025		Fixing Mount	1		
4	910400100006		Flat Washer	8		
5	910400500006		Spring Washer	8		
6	910200200055		Screw	4		
7	910200200058		Screw	4		
8	534721520027		Mounting Plate	1		
9	534710010000		Mounting Plate	1		
10	534710001001		Indicator Kit	1		
11	910200200036		Screw	4		
12	910200200090		Screw	2		
13	920500100001		Horn	1		
14	910200200035		Screw	4		
15	910400500005		Spring Washer	4		
16	910400100005		Flat Washer	4		
17	910200500015		Screw	2		
18	561733510000		Proximity Switch	1		
19	562021520013		Mounting Plate	1		
20	910300500011		Nut	2		
21	561733010001		Wire Harness	1		
21	561733010013		Wire Harness	1		EN1175:2020
22	910300500001		Nut	2		
23	920200300003		Switch	1		
24	910200400006		Screw	4		
25	910400100003		Flat Washer	2		
26	562021520014		Mounting Plate	1		

02 Chassis assembly (562046038501)

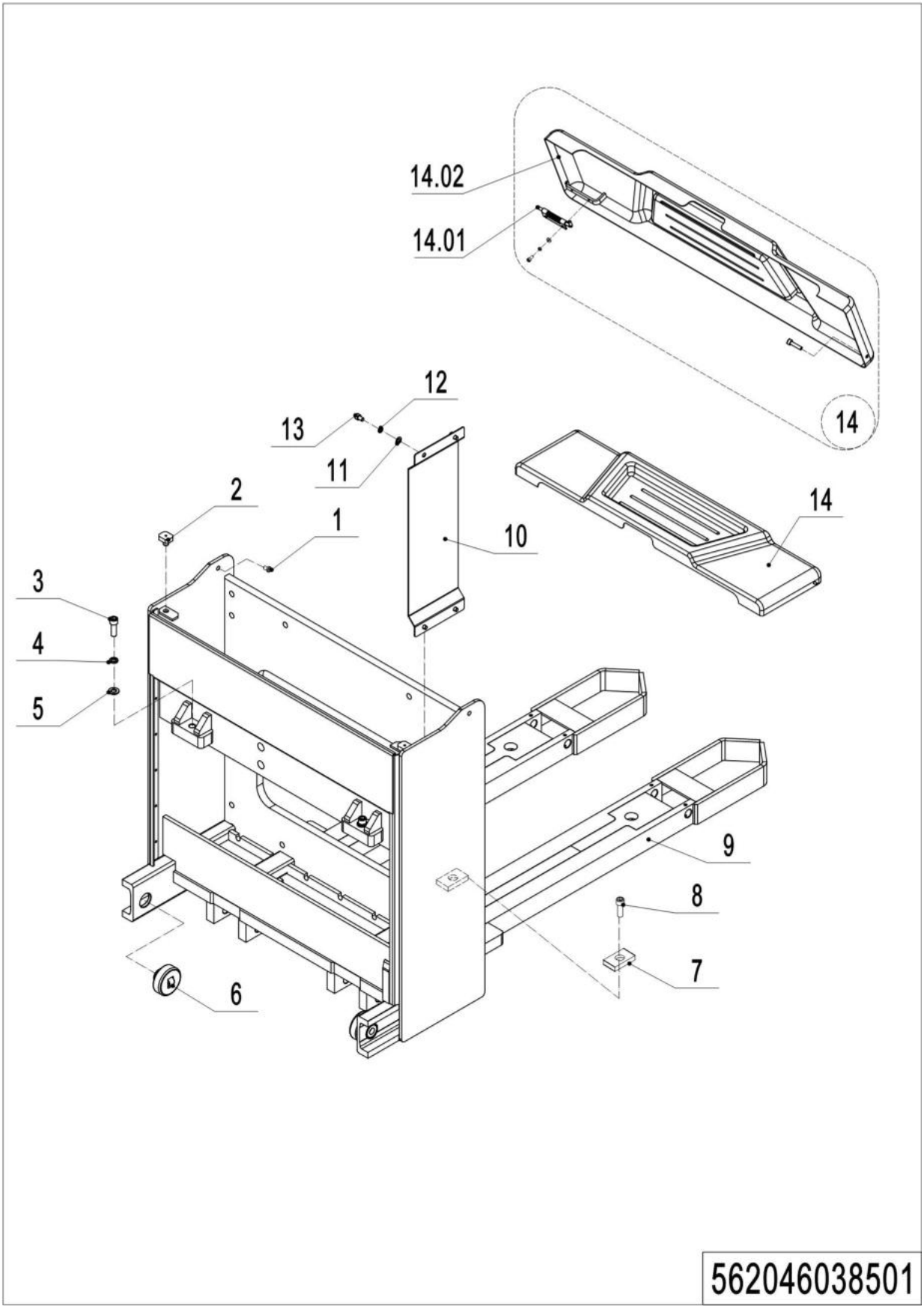

1= Supply as package. 2= Supply with constraints. 3= Phasing-out supply. 4= Supply as assembly. 5= Check other tables.

02 Chassis assembly (562046038501)

No.	Item Code	Mark	Item Description	Qty.	Substitute	Note
1	534721520023		Sleeve	2		
2	505938520016		Crash Pad	2		
3	910200200099		Screw	2		
4	910400500008		Spring Washer	2		
5	910400100008		Flat Washer	2		
6	940200300001		Compound Roller	2		
7	534721520024		Crash Pad	2		
8	910200200035		Screw	2		
9	561738510001		Fork Carriage(570x1150)	1		570x1150
9	562038510006		Fork Carriage(685x1150)	1		685x1150
10	562038520035		Baffle	1		
11	910400100006		Flat Washer	4		
12	910400500006		Spring Washer	4		
13	910200200053		Screw	4		
14	562098510003		Cell Cover	1		
14.01	940800900001		Lock Pin	1		
14.02	562021010002		Cell Cover	1		

03 Chassis assembly (sideways) (562046038502)

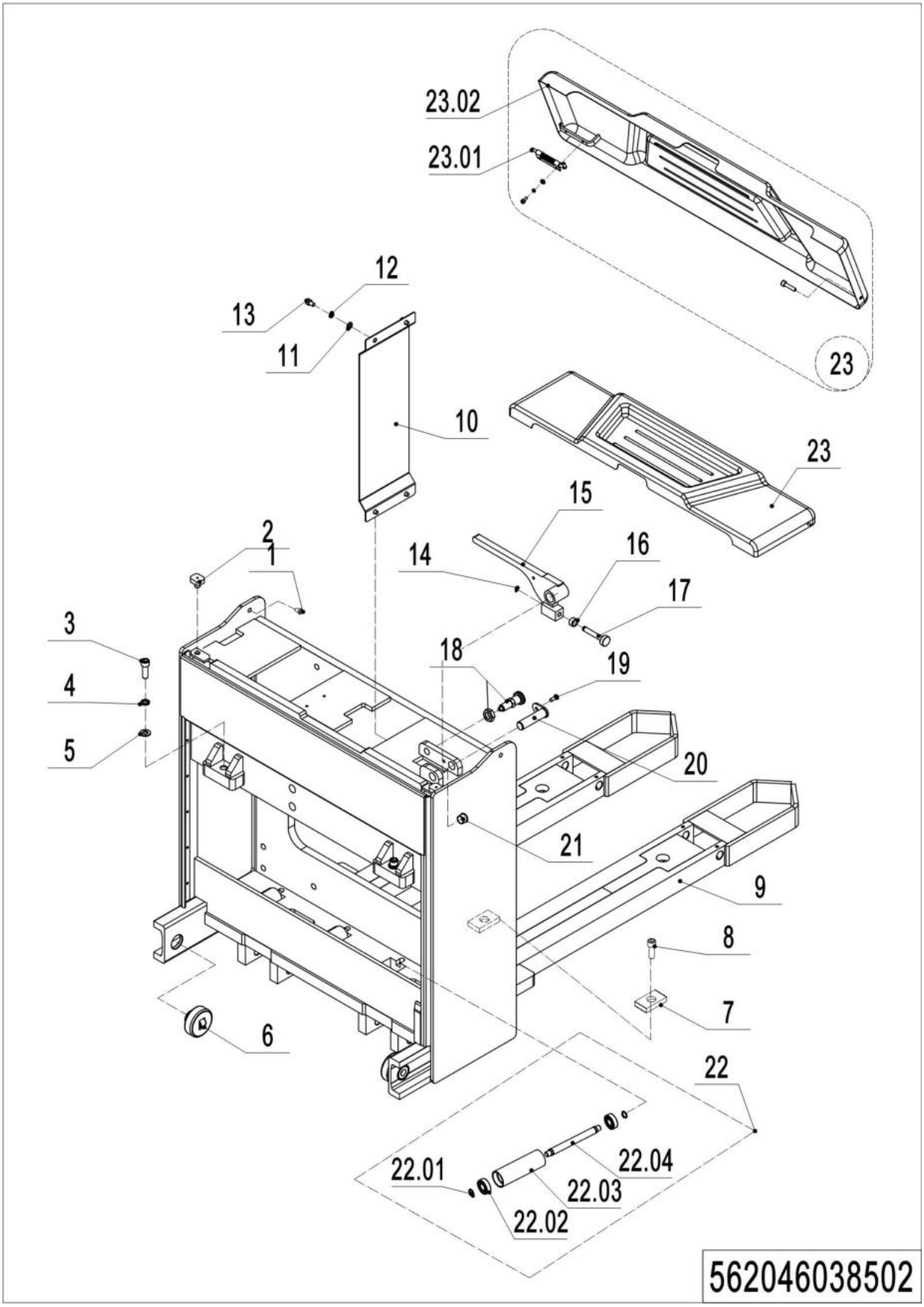

03 Chassis assembly (sideways) (562046038502)

No.	Item Code	Mark	Item Description	Qty.	Substitute	Note
1	534721520023		Sleeve	2		
2	505938520016		Crash Pad	2		
3	910200200099		Screw	2		
4	910400500008		Spring Washer	2		
5	910400100008		Flat Washer	2		
6	940200300001		Compound Roller	2		
7	534721520024		Crash Pad	2		
8	910200200035		Screw	2		
9	562038510007		Fork Carriage(570x1150)	1		570x1150
9	562038510009		Fork Carriage(685x1150)	1		685x1150
10	562038520035		Baffle	1		
11	910400100006		Flat Washer	4		
12	910400500006		Spring Washer	4		
13	910200200053		Screw	4		
14	910401300002		Circlip	1		
15	562038510008		Baffle	1		
16	535921520038		Spacer Bush	1		
17	535921520037		Pin	1		
18	940800900002		Indexing Plunger	1		
19	910200400017		Screw	1		
20	535921510004		Pin	1		
21	940500200008		Bushing	2		
22	534721510003		Roller	4		
22.01	910401300006		Circlip	8		
22.02	910700200017		Bearing	8		
22.03	534721520028		Roller	4		
22.04	534721520029		Axle	4		
23	562098510003		Cell Cover	1		
23.01	940800900001		Lock Pin	1		
23.02	562021010002		Cell Cover	1		

1= Supply as package. 2= Supply with constraints. 3= Phasing-out supply. 4= Supply as assembly. 5= Check other tables.

04 Fork Carriage (562046038001)

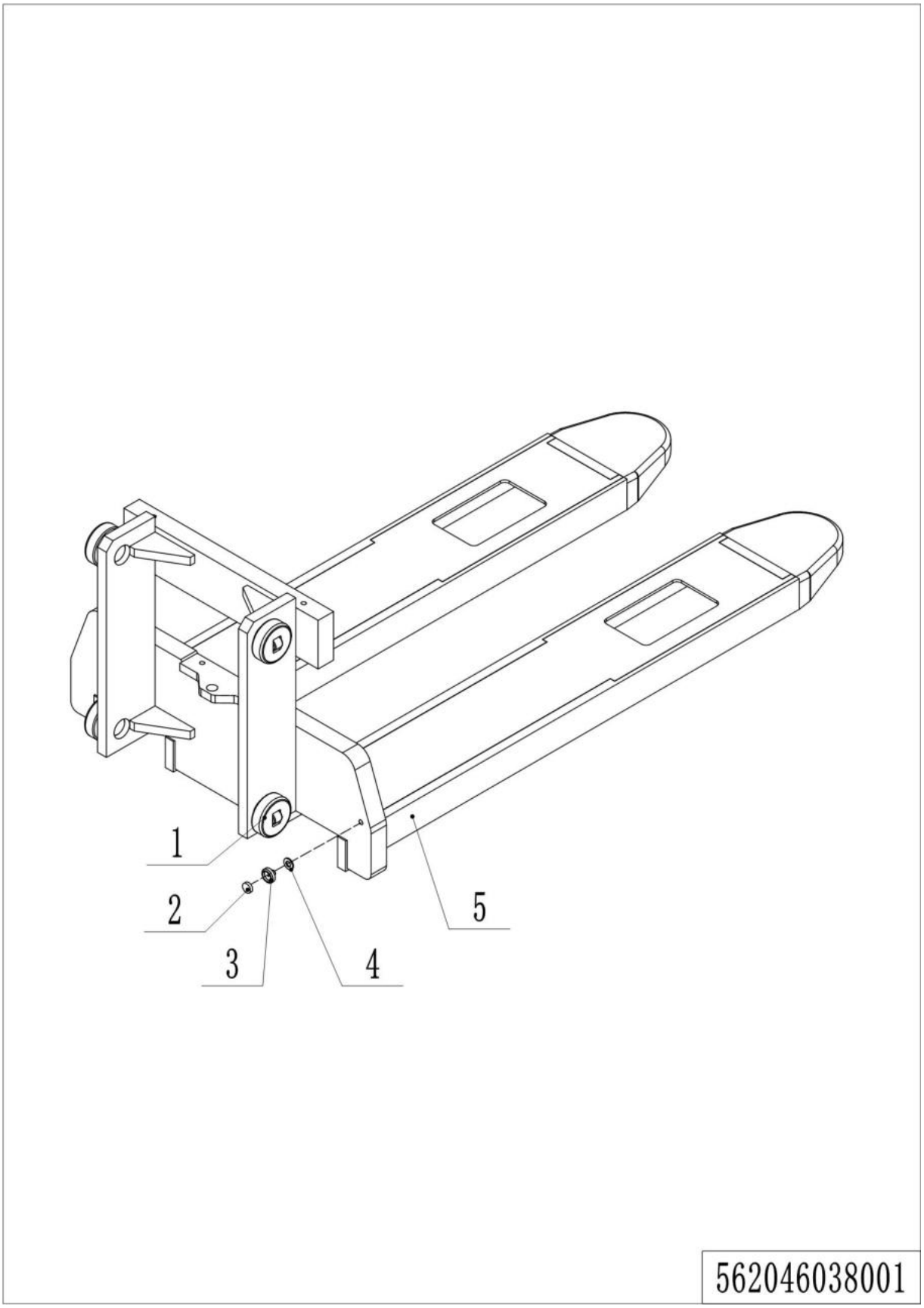

1= Supply as package. 2= Supply with constraints. 3= Phasing-out supply. 4= Supply as assembly. 5= Check other tables.

04 Fork Carriage (562046038001)

No.	Item Code	Mark	Item Description	Qty.	Substitute	Note
1	940200300008		Compound Roller	4		
2	940600100001		Magnetic Steel	1		
3	940600200001		Mounting Base	1		
4	910400100007	1	Flat Washer	2		
5	562038010001	2	Fork(570x1150)	1		Two-stage mast
5	562038010002	2	Fork(685x1150)	1		Two-stage mast
5	562038010003	2	Fork(570x1150)	1		Two-stage mast full free lift
5	562038010004	2	Fork(685x1150)	1		Two-stage mast full free lift
5	562038010005	2	Fork(570x1150)	1		Triple mast
5	562038010006	2	Fork(685x1150)	1		Triple mast
5	562038010007	2	Fork(570x1150)	1		Triple mast full free lift
5	562038010008	2	Fork(685x1150)	1		Triple mast full free lift

05 Pull rod assembly (561746038501)

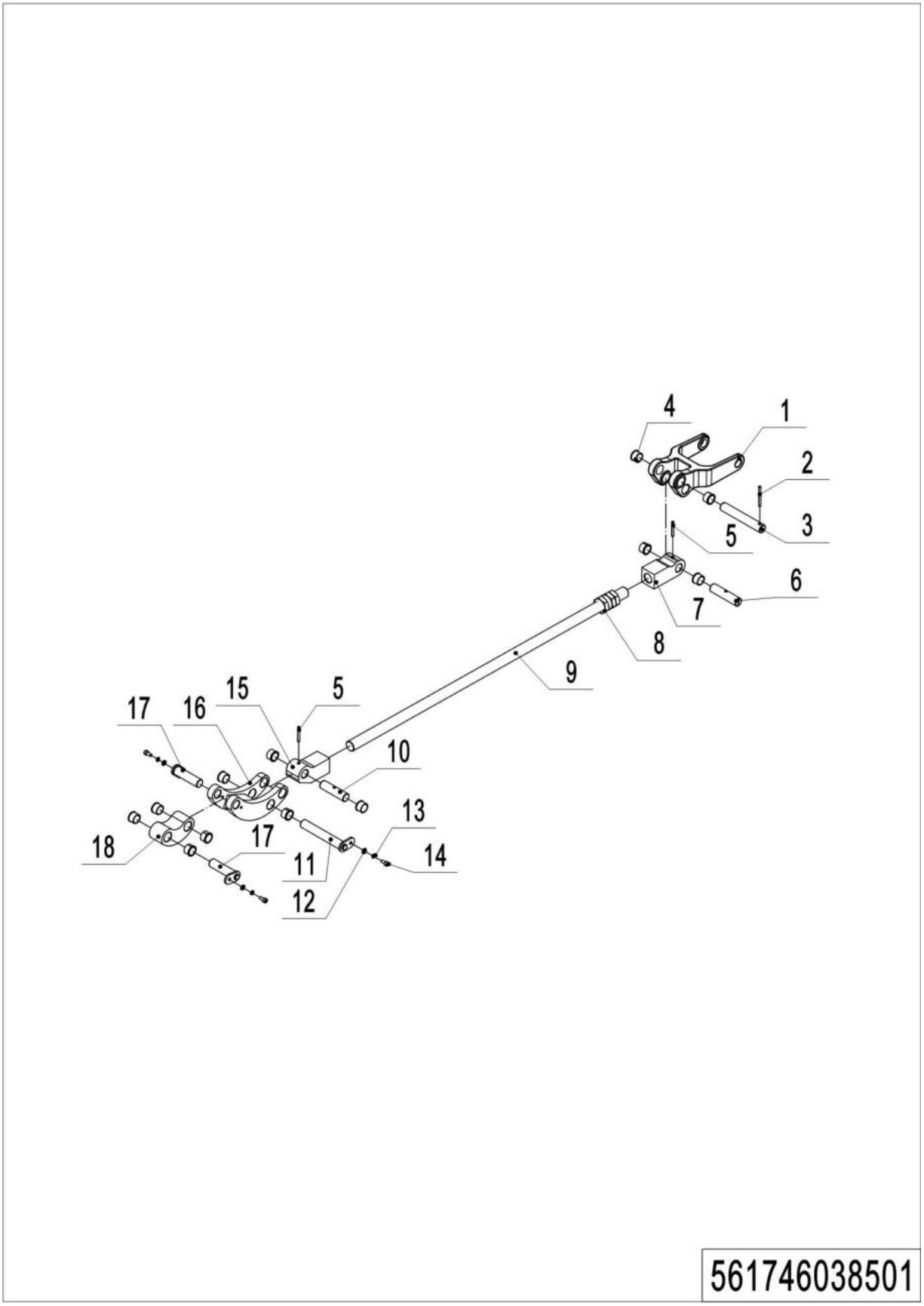

1= Supply as package. 2= Supply with constraints. 3= Phasing-out supply. 4= Supply as assembly. 5= Check other tables.

05 Pull rod assembly (561746038501)

No.	Item Code	Mark	Item Description	Qty.	Substitute	Note
1	562038520023		Riser	2		
2	910600400031		Spring Pin	2		
3	562038520025		Pin	2		
4	940500200007		Bushing	24		
5	910600400028		Spring Pin	4		
6	562038520024		Axle	2		
7	562038520026		Sleeve	2		
8	910300400010		Nut	4		
9	561738510002		Rod	2		
10	562038520028		Axle	2		
11	562038510003		Pin	2		
12	910400100005		Flat Washer	6		
13	910400500005		Spring Washer	6		
14	910200200035		Screw	6		
15	562038520027		Sleeve	2		
16	562038510004		Plate	2		
17	562038510005		Pin	4		
18	562038520029		Oscillating Bar	2		

Chapter 4: Mast System

01 Two-stage Mast Standard Lift (535946044001)

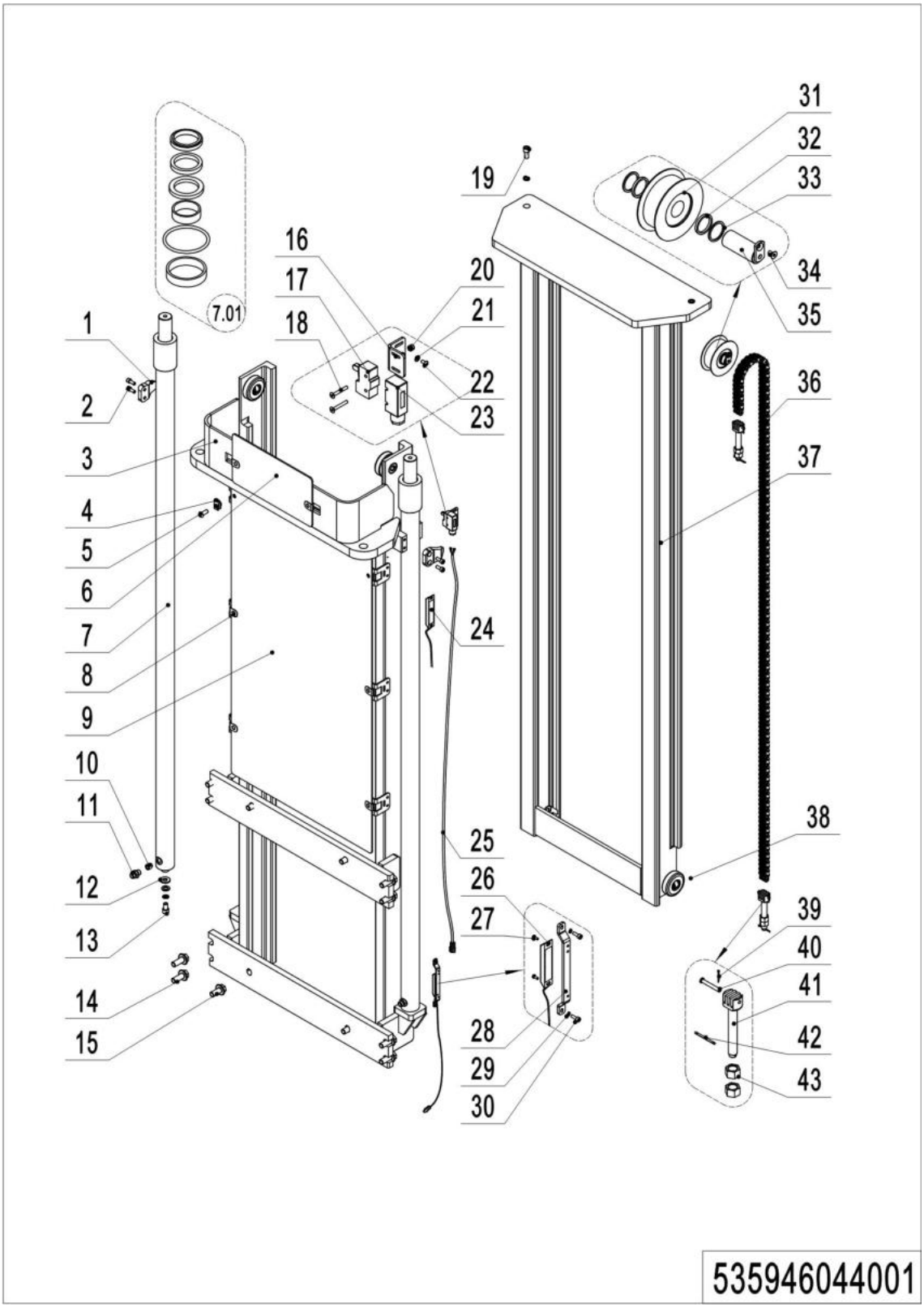

01 Two-stage Mast Standard Lift (535946044001)

No.	Item Code	Mark	Item Description	Qty.	Substitute	Note
1	275044020076		Fixing Plate	2		
2	910200200057	1	Screw	4		
3	534744010013	2	Outer Mast(2900)	1		
3	534744010012	2	Outer Mast(3200)	1		
3	534744010011	2	Outer Mast(3600)	1		
4	940400400003		Cage Nut	2		
5	941100100005	1	Screw	2		
6	534744520037		Guard Plate	1		
7	534744010008		Cylinder	2		**2900**
7	534744010007		Cylinder	2		**3200**
7	534744010006		Cylinder	2		**3600**
7.01	534798510005		Seal Kit	2		
8	940400300001		Spring Buckle	4		
8	940400300001		Spring Buckle	6		
9	534744020011		Guard Plate	1		**2900**
9	534744520038		Guard Plate	1		**3200**
9	534744020006		Guard Plate	1		**3600**
10	950600300001		Safety Valve	2		
11	950400400003		Joint	2		
12	534744520015		Subplate	2		
13	910200200096		Screw	2		
14	910100800006		Bolt	8		
15	910100800005		Bolt	4		
16	534744520036		Fixing Plate	1		
17	920200300001		Microswitch	1		
18	910200400007		Screw	2		
19	910200200097		Screw	2		
20	910300500001		Nut	2		
21	910400100003	1	Flat Washer	2		
22	910200300005	1	Screw	2		

1= Supply as package. 2= Supply with constraints. 3= Phasing-out supply. 4= Supply as assembly. 5= Check other tables.

01 Two-stage Mast Standard Lift (535946044001) Continuation

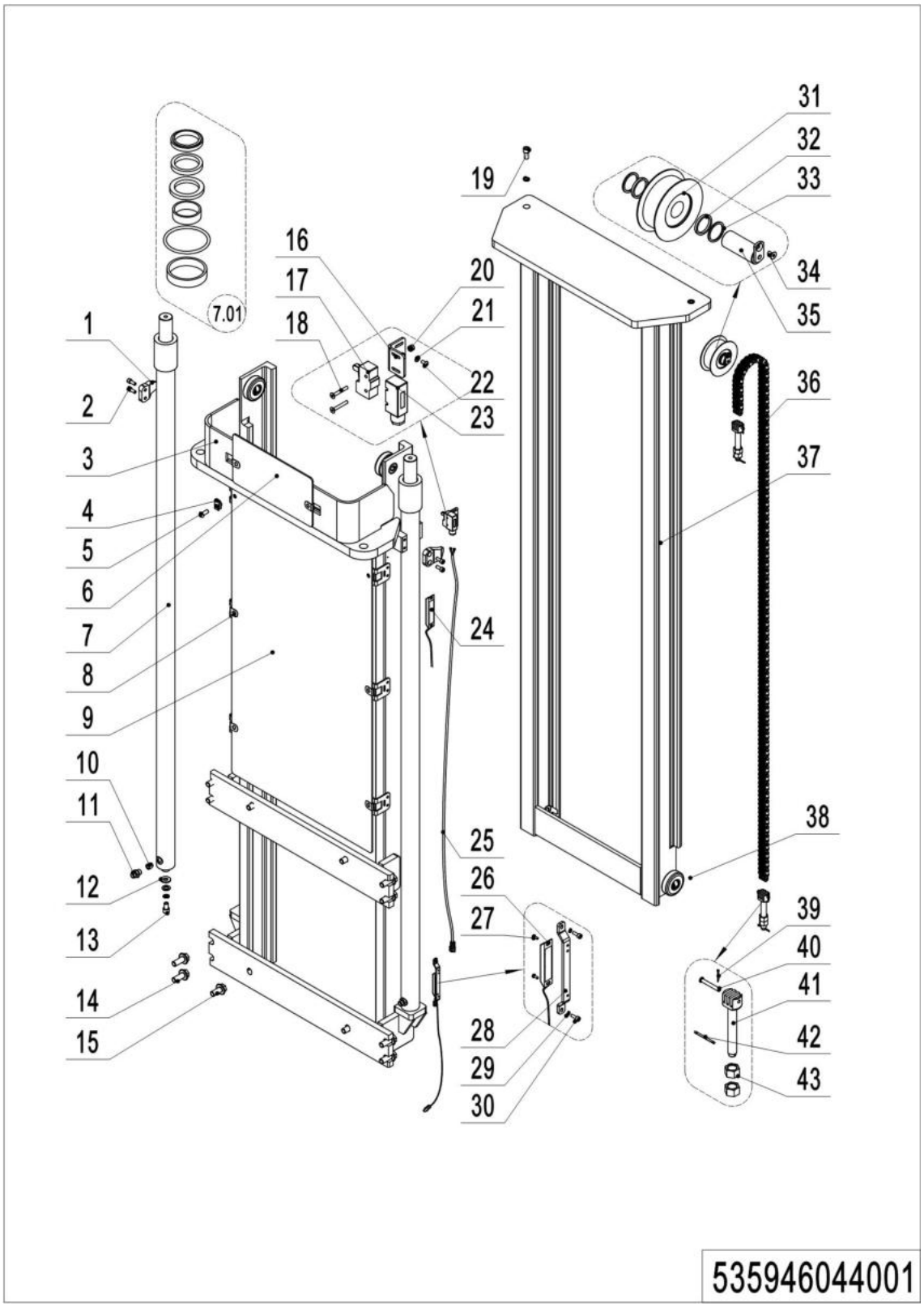

01 Two-stage Mast Standard Lift (535946044001) Continuation

No.	Item Code	Mark	Item Description	Qty.	Substitute	Note
23	920200300008		Protective Cover	1		
24	535933510013	3	Switch	1		**2900**
24	535933510014	3	Switch	1		**3200**
24	535933510016	3	Switch	1		**3600**
24	535933510021		Switch	1		**EN1175-2020**
25	535933510025		Wire Harness	1		**EN1175-2020**
26	535933510005	3	Switch	1		
26	535933510020		Switch	1		**EN1175-2020**
27	910200500010	1	Screw	4		
27	910200500021	1	Screw	4		**EN1175-2020**
28	534744520059		Protective Cover	2		
28	534744520080		Protective Cover	2		**EN1175-2020**
29	910400500003	1	Spring Washer	4		
30	910200300006	1	Screw	4		
31	940200500010		Sprocket Bearing	1		
32	940600500009		Washer	2		
33	940600500008		Washer	2		
34	910200400016	1	Screw	1		
35	533544510006		Pin	1		
36	534744010010		Chain	1		**2900**
36	532944010015		Chain	1		**3200**
36	534744010009		Chain	1		**3600**
37	534744010016	2	Inner Mast(2900)	1		
37	534744010015	2	Inner Mast(3200)	1		
37	534744010014	2	Inner Mast(3600)	1		
38	940200300004		Compound Roller	4		
39	910600600006	1	Cotter Pin	2		
40	941100800012		Pin	2		
41	532644520038		Chain Anchor	2		
42	910600600023	1	Cotter Pin	2		
43	910300200008	1	Nut	4		

02 Two-stage mast full free lift (535946043501)

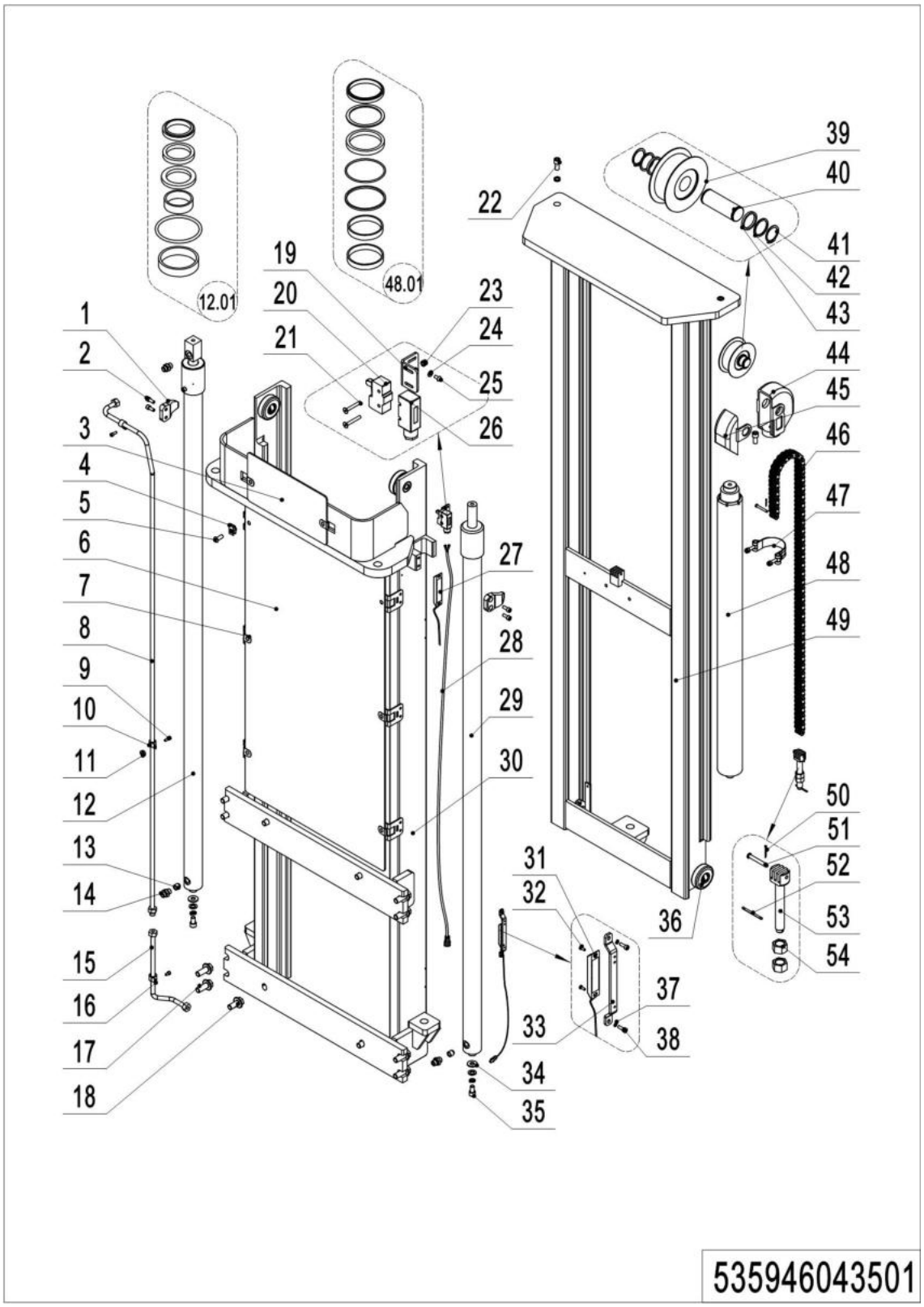

02 Two-stage mast full free lift (535946043501)

No.	Item Code	Mark	Item Description	Qty.	Substitute	Note
1	275044020076		Fixing Plate	2		
2	910200200057	1	Screw	4		
3	534744520037		Guard Plate	1		
4	940400400003		Cage Nut	2		
5	941100100005	1	Screw	2		
6	534744020011		Guard Plate	1		**2900**
6	534744520038		Guard Plate	1		**3200**
6	534744020006		Guard Plate	1		**3600**
7	940400300001		Spring Buckle	4		
7	940400300001		Spring Buckle	6		
8	534743510017		Steel Tube	1		**2900**
8	534743510016		Steel Tube	1		**3200**
8	534743510015		Steel Tube	1		**3600**
9	910200200035		Screw	2		
10	951000100001		Hose Clamp	2		
11	940600500001		Washer	2		
12	534743510008		Cylinder	1		**2900**
12	534743510007		Cylinder	1		**3200**
12	534743510006		Cylinder	1		**3600**
12.01	534798510002		Seal Kit	2		**Also for cylinder 29**
13	950600300001		Safety Valve	3		
14	950400400003		Joint	4		
15	534743510018		Steel Tube	1		
16	951000100003		Hose Clamp	1		
17	910100800006		Bolt	8		
18	910100800005		Bolt	4		
19	534744520036		Fixing Plate	1		
20	920200300001		Microswitch	1		
21	910200400007	1	Screw	2		
22	910200200097	1	Screw	3		

1= Supply as package. 2= Supply with constraints. 3= Phasing-out supply. 4= Supply as assembly. 5= Check other tables.

02 Two-stage Mast Full Free Lift (535946043501) Continuation 1

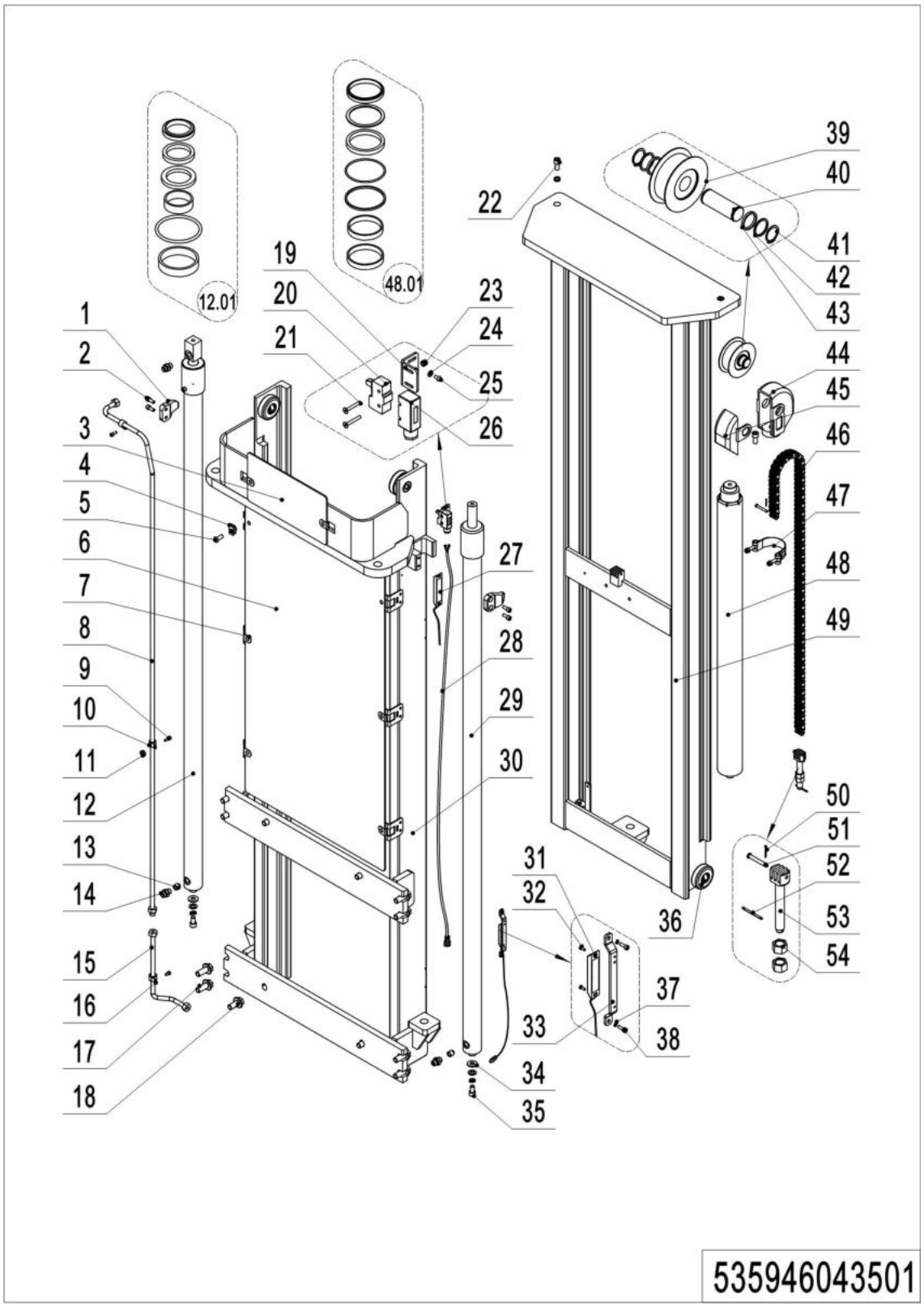

02 Two-stage Mast Full Free Lift (535946043501) Continuation 1

No.	Item Code	Mark	Item Description	Qty.	Substitute	Note
23	910300500001	1	Nut	2		
24	910400100003	1	Flat Washer	2		
25	910200300005	1	Screw	2		
26	920200300008		Protective Cover	1		
27	535933510013		Switch	1		**2900**
27	535933510014		Switch	1		**3200**
27	535933510016		Switch	1		**3600**
27	535933510021		Switch	1		**EN1175-2020**
28	535933510025		Wire Harness	1		
29	534743510014		Cylinder	1		**2900**
29	534743510013		Cylinder	1		**3200**
29	534743510012		Cylinder	1		**3600**
30	534743510022	2	Outer Mast(2900)	1		
30	534743510021	2	Outer Mast(3200)	1		
30	534743510020	2	Outer Mast(3600)	1		
31	535933510005	3	Switch	1		
31	535933510020		Switch	1		**EN1175-2020**
32	910200500010	1	Screw	4		
32	910200500021	1	Screw	4		
33	534744520059	3	Protective Cover	2		
33	534744520080		Protective Cover	2		**EN1175-2020**
34	534744520015		Subplate	2		
35	910200200096	1	Screw	2		
36	940200300004		Compound Roller	4		
37	910400500003	1	Spring Washer	4		
38	910200300006	1	Screw	4		
39	940200500010		Sprocket Bearing	1		
40	532644520037		Axle	1		
41	910401300016		Circlip	2		
42	940600500008	1	Washer	2		

1= Supply as package. 2= Supply with constraints. 3= Phasing-out supply. 4= Supply as assembly. 5= Check other tables.

02 Two-stage Mast Full Free Lift (535946043501) Continuation 2

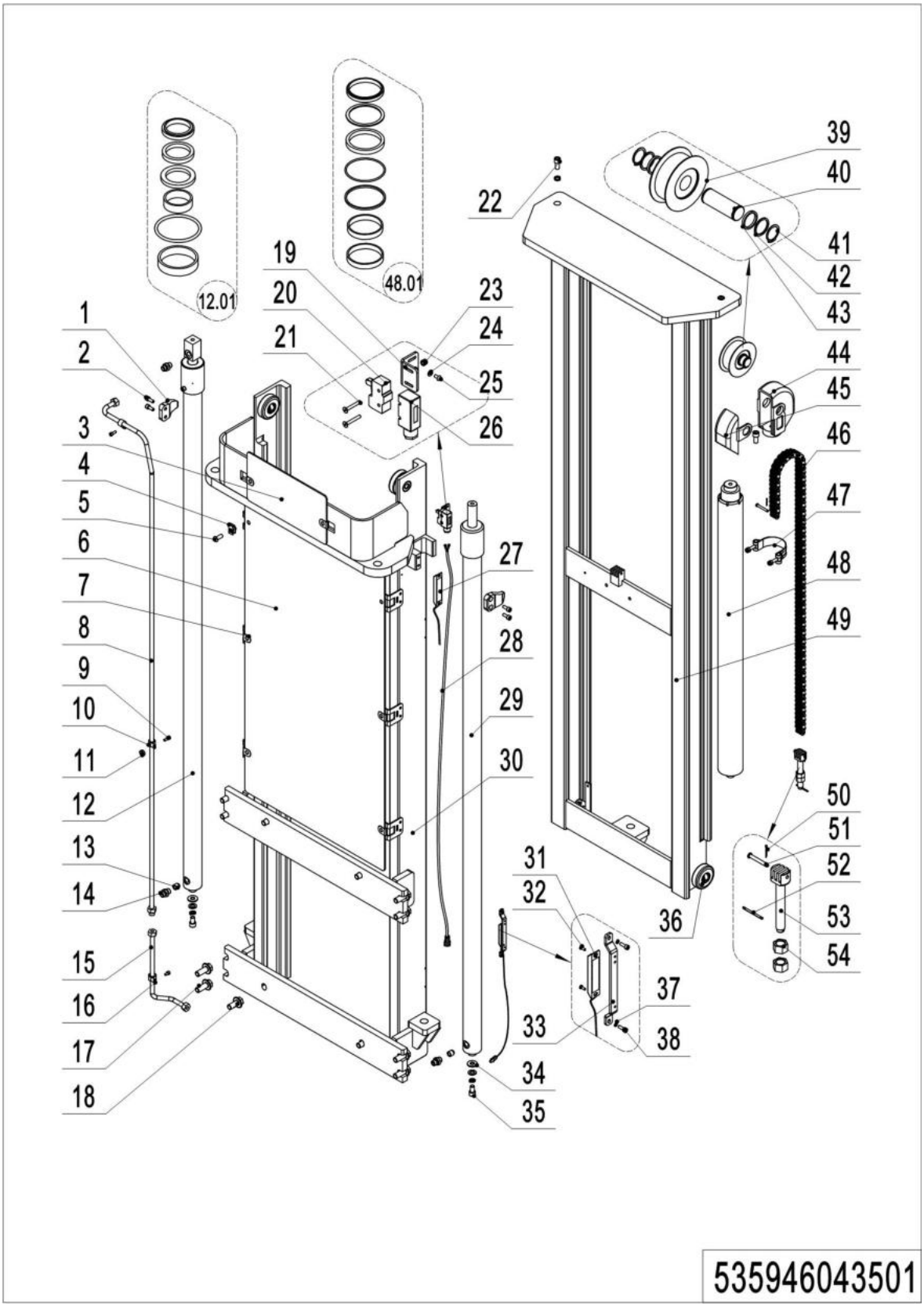

02 Two-stage Mast Full Free Lift (535946043501) Continuation 2

No.	Item Code	Mark	Item Description	Qty.	Substitute	Note
43	940600500009		Washer	2		
44	532644520035		Yoke	1		
45	532644520036		Side Cover	1		
46	532644510077		Chain	1		**2900**
46	532644510083		Chain	1		**3200**
46	532644510073		Chain	1		**3600**
47	940800600002		Hoop	1		
48	534743510011		Cylinder	1		**2900**
48	534743510010		Cylinder	1		**3200**
48	534743510009		Cylinder	1		**3600**
48.01	534798510003		Seal Kit	1		
49	534743510025	2	Inner Mast(2900)	1		
49	534743510024	2	Inner Mast(3200)	1		
49	534743510023	2	Inner Mast(3600)	1		
50	910600600006	1	Cotter Pin	2		
51	941100800012		Pin	2		
52	910600600023	1	Cotter Pin	1		
53	532644520038		Chain Anchor	1		
54	910300200008	1	Nut	2		

03 Triple Mast Standard Lift (535946045001)

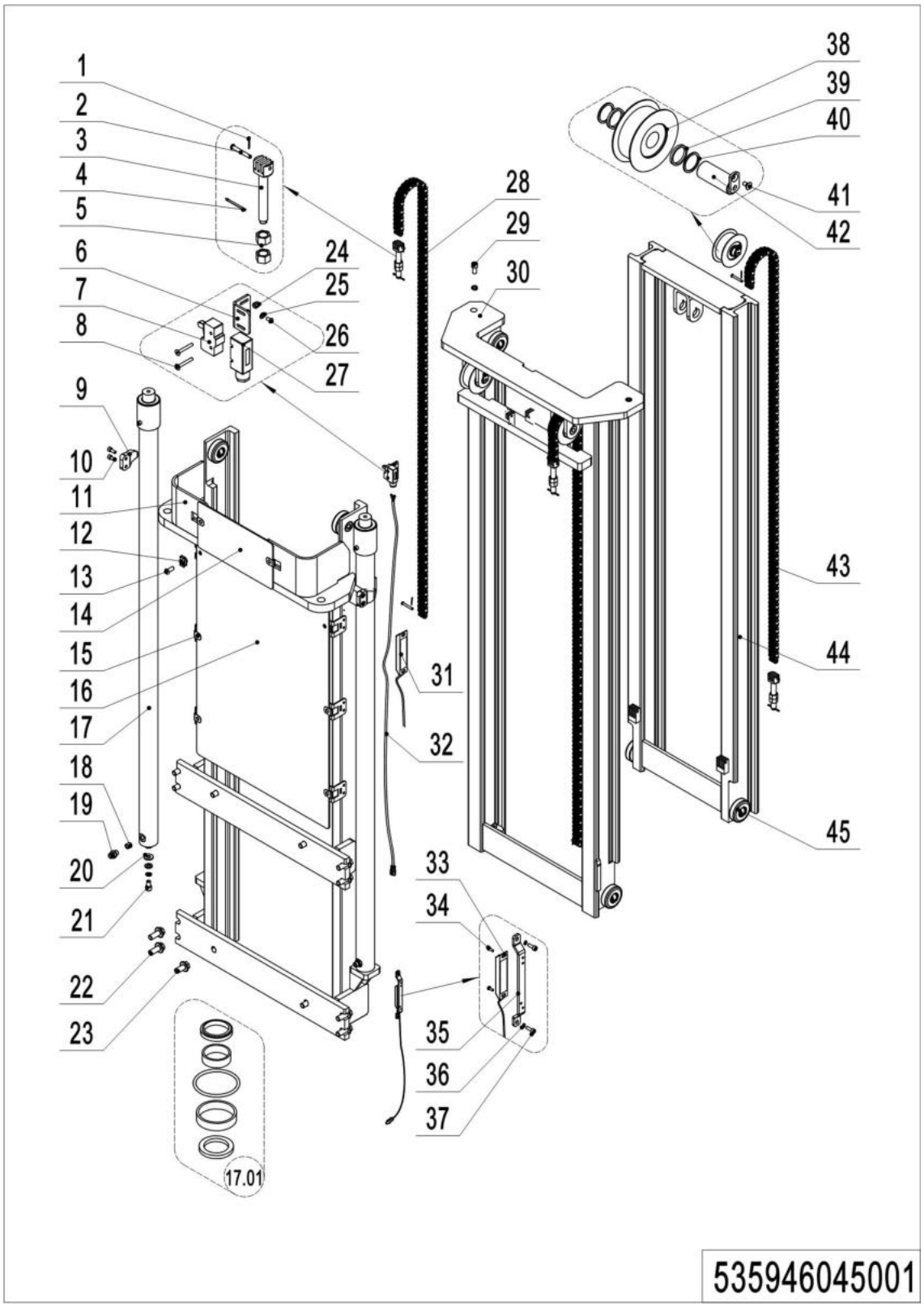

03 Triple Mast Standard Lift (535946045001)

No.	Item Code	Mark	Item Description	Qty.	Substitute	Note
1	910600600006	1	Cotter Pin	6		
2	941100800012		Pin	6		
3	532644520038		Chain Anchor	3		
4	910600600023		Cotter Pin	3		
5	910300200008	1	Nut	6		
6	534744520036		Fixing Plate	1		
7	920200300001		Microswitch	1		
8	910200400007	1	Screw	2		
9	275044020076		Fixing Plate	2		
10	910200200057	1	Screw	4		
11	534745010012	2	Outer Mast(4300)	1		
11	534745010010	2	Outer Mast(4600)	1		
12	940400400003		Cage Nut	2		
13	941100100005	1	Screw	2		
14	534744520037		Guard Plate	1		
15	940400300001		Spring Buckle	6		
16	534744520039		Guard Plate	1		**4300**
16	534744520038		Guard Plate	1		**4600**
17	534745010007		Cylinder	2		**4300**
17	534745010006		Cylinder	2		**4600**
17.01	534798510004		Seal Kit	2		
18	950600300001		Safety Valve	2		
19	950400400003		Joint	2		
20	534744520015		Subplate	2		
21	910200200096	1	Screw	2		
22	910100800006		Bolt	8		
23	910100800005		Bolt	4		
24	910300500001	1	Nut	2		
25	910400100003	1	Flat Washer	2		

1= Supply as package. 2= Supply with constraints. 3= Phasing-out supply. 4= Supply as assembly. 5= Check other tables.

03 Triple Mast Standard Lift (535946045001) Continuation

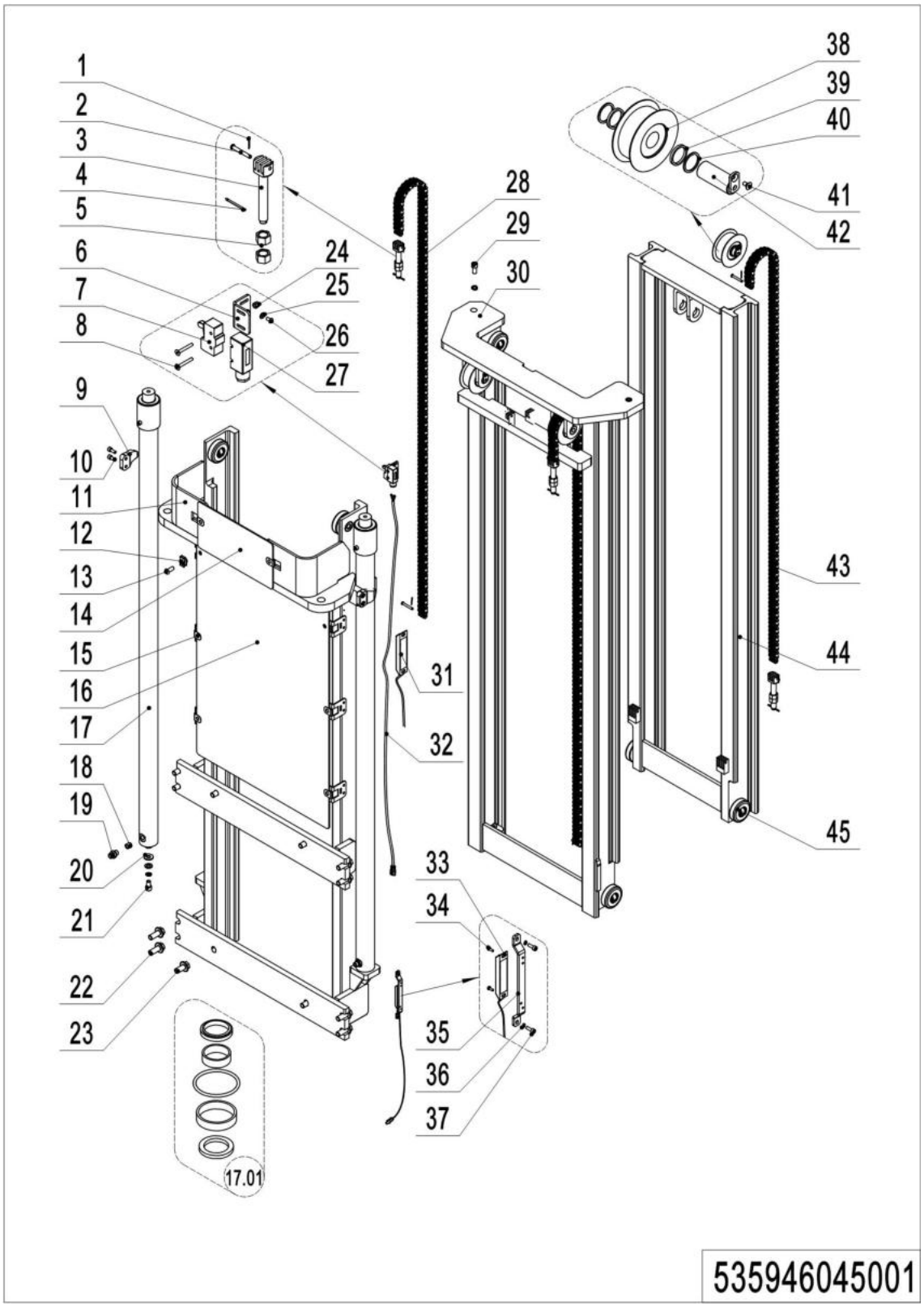

03 Triple Mast Standard Lift (535946045001) Continuation

No.	Item Code	Mark	Item Description	Qty.	Substitute	Note
26	910200300005	1	Screw	2		
27	920200300008		Protective Cover	1		
28	534745010009		Chain	2		**4300**
28	534145010005		Chain	2		**4600**
29	910200200097		Screw	2		
30	534745010013	2	Middle Mast(4300)	1		
30	534745010011	2	Middle Mast(4600)	1		
31	535933510013		Switch	1		**4300**
31	535933510014		Switch	1		**4600**
31	535933510021		Switch	1		**EN1175-2020**
32	535933510025		Wire Harness	1		**EN1175-2020**
33	535933510005		Switch	1		
33	535933510020		Switch	1		**EN1175-2020**
34	910200500010	1	Screw	4		
34	910200500021	1	Screw	4		**EN1175-2020**
35	534744520059		Protective Cover	2		
35	534744520080		Protective Cover	2		**EN1175-2020**
36	910400500003	1	Spring Washer	4		
37	910200200014	1	Screw	4		
38	940200500010		Sprocket Bearing	3		
39	940600500009	1	Washer	6		
40	940600500008	1	Washer	6		
41	910200400016	1	Screw	3		
42	535045010008		Pin	3		
43	535044510020		Chain	1		**4300**
43	534745010008		Chain	1		**4600**
44	534745010005		Inner Mast(4300)	1		**4300**
44	534745010004		Inner Mast(4600)	1		**4600**
45	940200300004		Compound Roller	8		

1= Supply as package. 2= Supply with constraints. 3= Phasing-out supply. 4= Supply as assembly. 5= Check other tables.

04 Triple Mast Full Free Lift (535946044501)

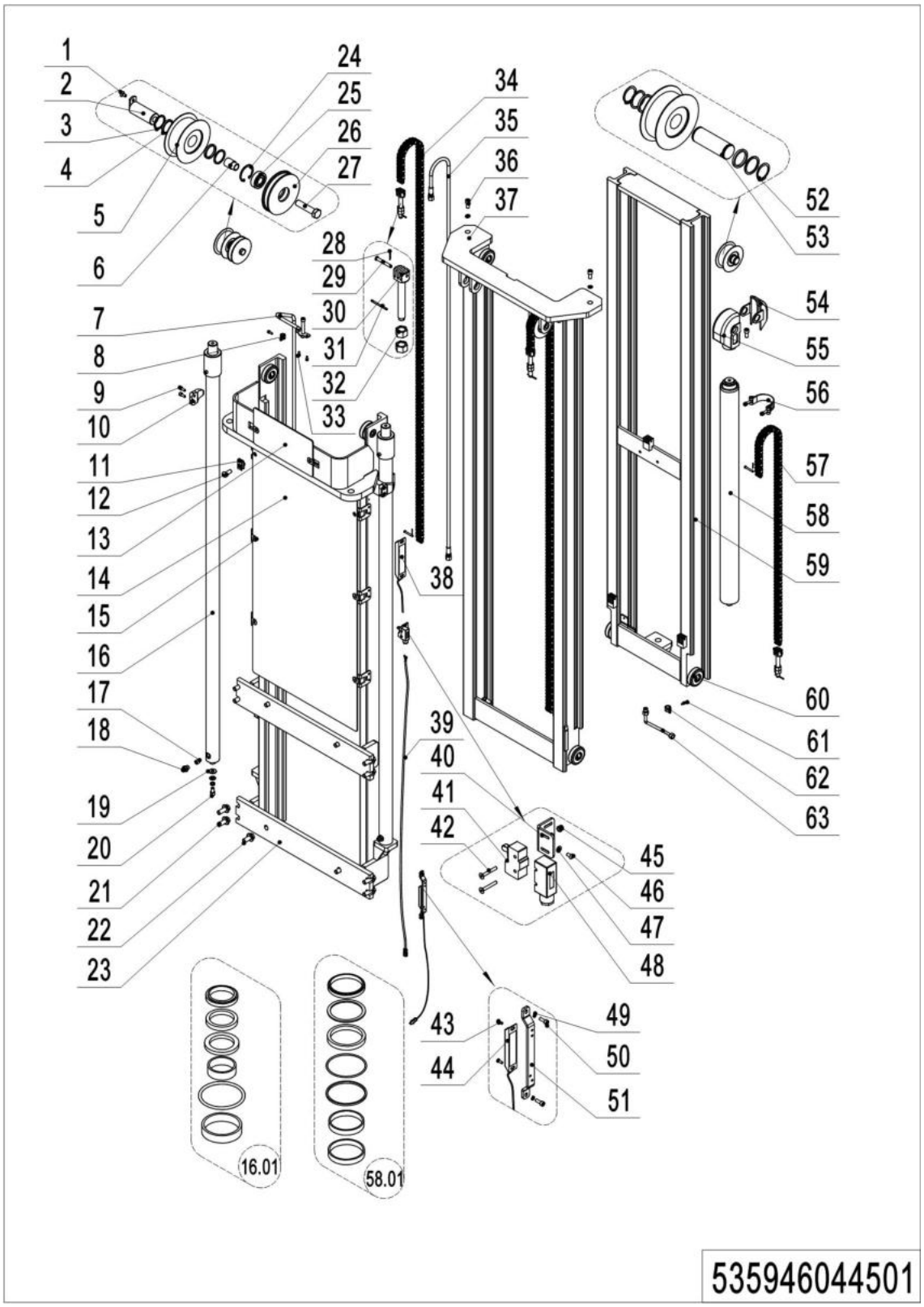

04 Triple Mast Full Free Lift (535946044501)

No.	Item Code	Mark	Item Description	Qty.	Substitute	Note
1	910200400016	1	Screw	2		
2	533544510006		Pin	2		
3	940600500009		Washer	6		
4	940600500008		Washer	6		
5	940200500010		Sprocket Bearing	3		
6	535944520001		Sleeve	1		
7	534744520074		Steel Tube	1		**3400**
7	534744510023		Steel Tube	1		**4000**
7	534744510021		Steel Tube	1		**4300**
7	534744510020		Steel Tube	1		**4600**
7	534744510022		Steel Tube	1		**5300**
7	534744520045		Steel Tube	1		**5500**
8	951000100001		Hose Clamp	2		
9	910200200057	1	Screw	4		
10	275044020076		Fixing Plate	2		
11	940400400003		Cage Nut	2		
12	941100100005		Screw	2		
13	534744520037		Guard Plate	1		
14	534744520072		Guard Plate	1		**3400**
14	534744520041		Guard Plate	1		**4000**
14	534744520039		Guard Plate	1		**4300**
14	534744520038		Guard Plate	1		**4600**
14	534744520040		Guard Plate	1		**5300**
14	534744520052		Guard Plate	1		**5500**
15	940400300001	1	Spring Buckle	4		
15	940400300001	1	Spring Buckle	6		
16	534744510044		Cylinder	2		**3400**
16	534744510019		Cylinder	2		**4000**
16	534744510017		Cylinder	2		**4300**
16	534744510016		Cylinder	2		**4600**

1= Supply as package. 2= Supply with constraints. 3= Phasing-out supply. 4= Supply as assembly. 5= Check other tables.

04 Triple Mast Full Free Lift (535946044501) Continuation 1

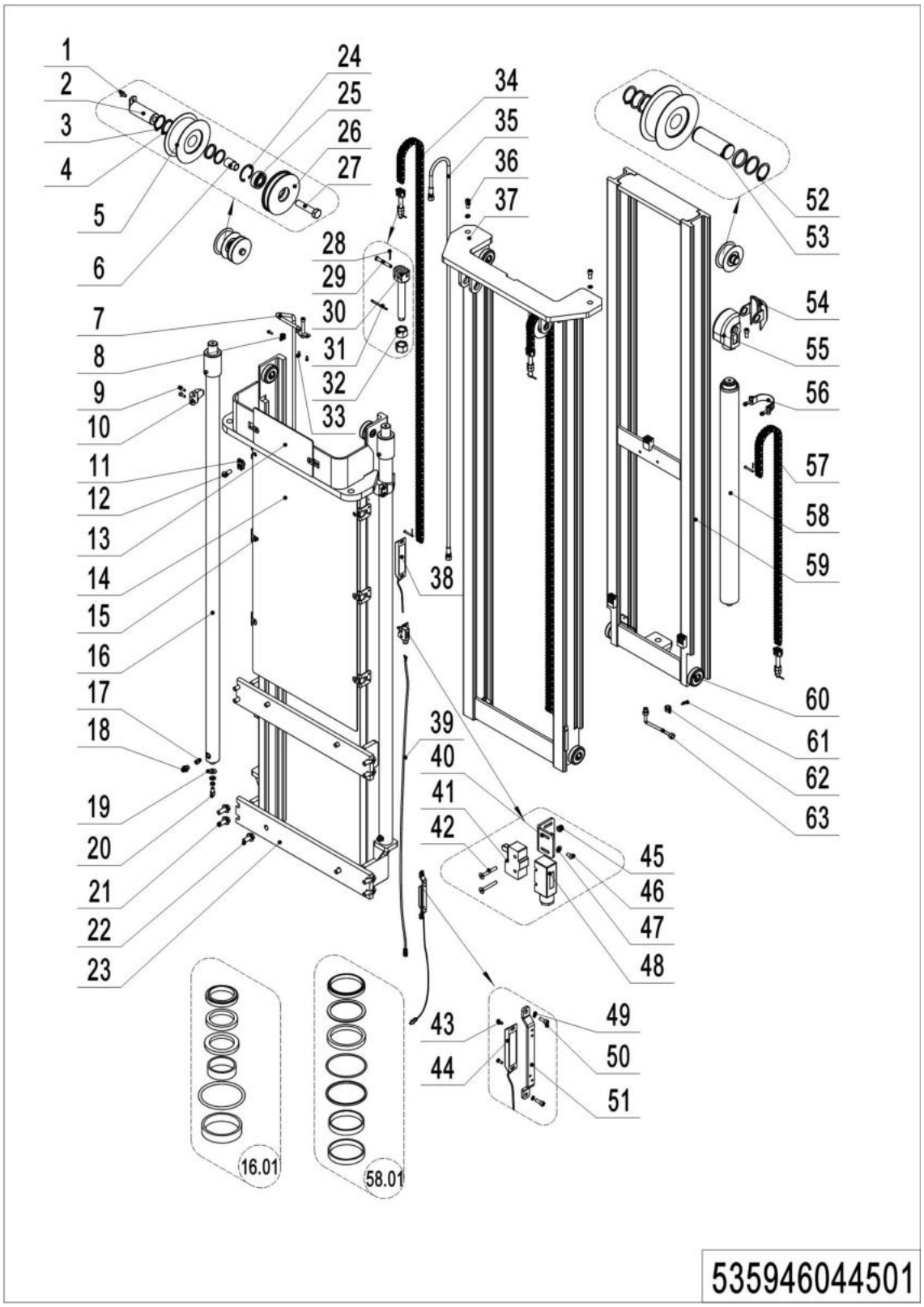

04 Triple Mast Full Free Lift (535946044501) Continuation 1

No.	Item Code	Mark	Item Description	Qty.	Substitute	Note
16	534744510018		Cylinder	2		**5300**
16	534744510028		Cylinder	2		**5500**
16.01	534798510000		Seal Kit	2		
17	950600300001		Safety Valve	3		
18	950400400003		Joint	3		
19	534744520015		Subplate	2		
20	910200200096	1	Screw	2		
21	910100800006	1	Bolt	8		
22	910100800005	1	Bolt	4		
23	534744510041	2	Outer Mast(3400)	1		
23	534744510039	2	Outer Mast(4000)	1		
23	534744510037	2	Outer Mast(4300)	1		
23	534744510030	2	Outer Mast(4600)	1		
23	534744510035	2	Outer Mast(5300)	1		
23	534744510032	2	Outer Mast(5500)	1		
24	910401400013	1	Circlip	1		
25	910700200019		Bearing	1		
26	535944520000		Pulley	1		
27	910100100073	1	Bolt	1		
28	910600600006	1	Cotter Pin	6		
29	941100800006	3	Pin	6		
29	941100800012		Pin	6		
30	941300100008		Chain Bolt	3		
31	910600600023	1	Cotter Pin	3		
32	910300200008	1	Nut	6		
33	910200400006	1	Screw	2		
34	532644510081		Chain	2		**3400**
34	534744510047		Chain	2		**4000**
34	534745010009		Chain	2		**4300**
34	534145010005		Chain	2		**4600**

04 Triple Mast Full Free Lift (535946044501) Continuation 2

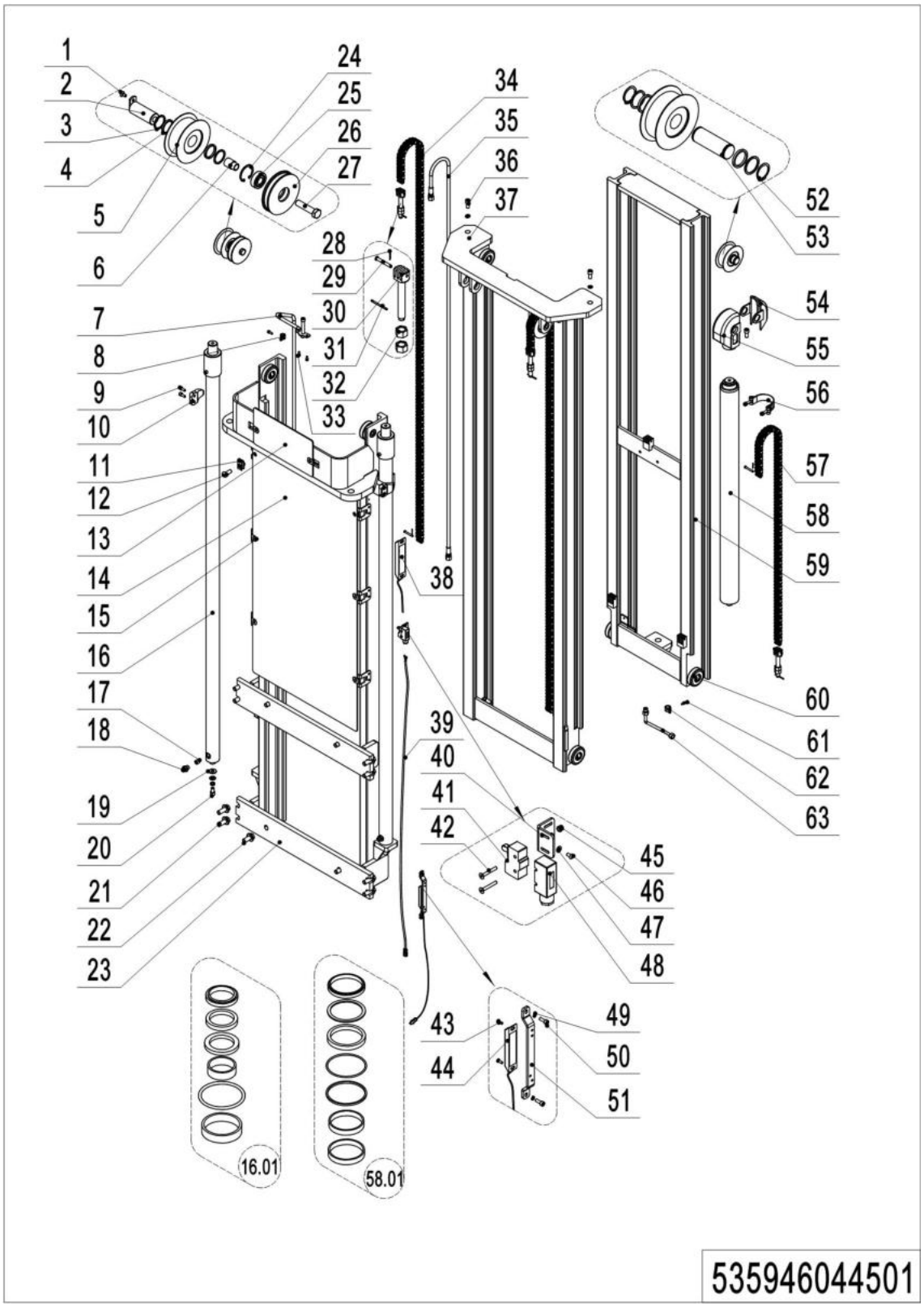

04 Triple Mast Full Free Lift (535946044501) Continuation 2

No.	Item Code	Mark	Item Description	Qty.	Substitute	Note
34	534744010009		Chain	2		**5300**
34	535044510031		Chain	2		**5500**
34	534744520073		Hose	1		**3400**
35	534744520043		Hose	1		**4000**
35	532644520143		Hose	1		**4300**
35	532644520144		Hose	1		**4600**
35	534744520050		Hose	1		**5300**
35	534744520044		Hose	1		**5500**
36	910200200097	1	Screw	3		
37	534744510042	2	Middle Mast(3400)	1		
37	534744510040	2	Middle Mast(4000)	1		
37	534744510038	2	Middle Mast(4300)	1		
37	534744510031	2	Middle Mast(4600)	1		
37	534744510036	2	Middle Mast(5300)	1		
37	534744510033	2	Middle Mast(5500)	1		
38	535933510018		Switch	1		**3400**
38	535933510012		Switch	1		**4000**
38	535933510013		Switch	1		**4300**
38	535933510014		Switch	1		**4600**
38	535933510016		Switch	1		**5300**
38	535933510017		Switch	1		**5500**
38	535933510021		Switch	1		**EN1175-2020**
39	535933510025		Wire Harness	1		
40	534744520036		Fixing Plate	1		
41	920200300001		Microswitch	1		
42	910200400007	1	Screw	4		
43	910200500010	1	Screw	4		
43	910200500021	1	Screw	4		**EN1175-2020**
44	535933510005		Switch	1		
44	535933510020		Switch	1		**EN1175-2020**

04 Triple Mast Full Free Lift (535946044501) Continuation 3

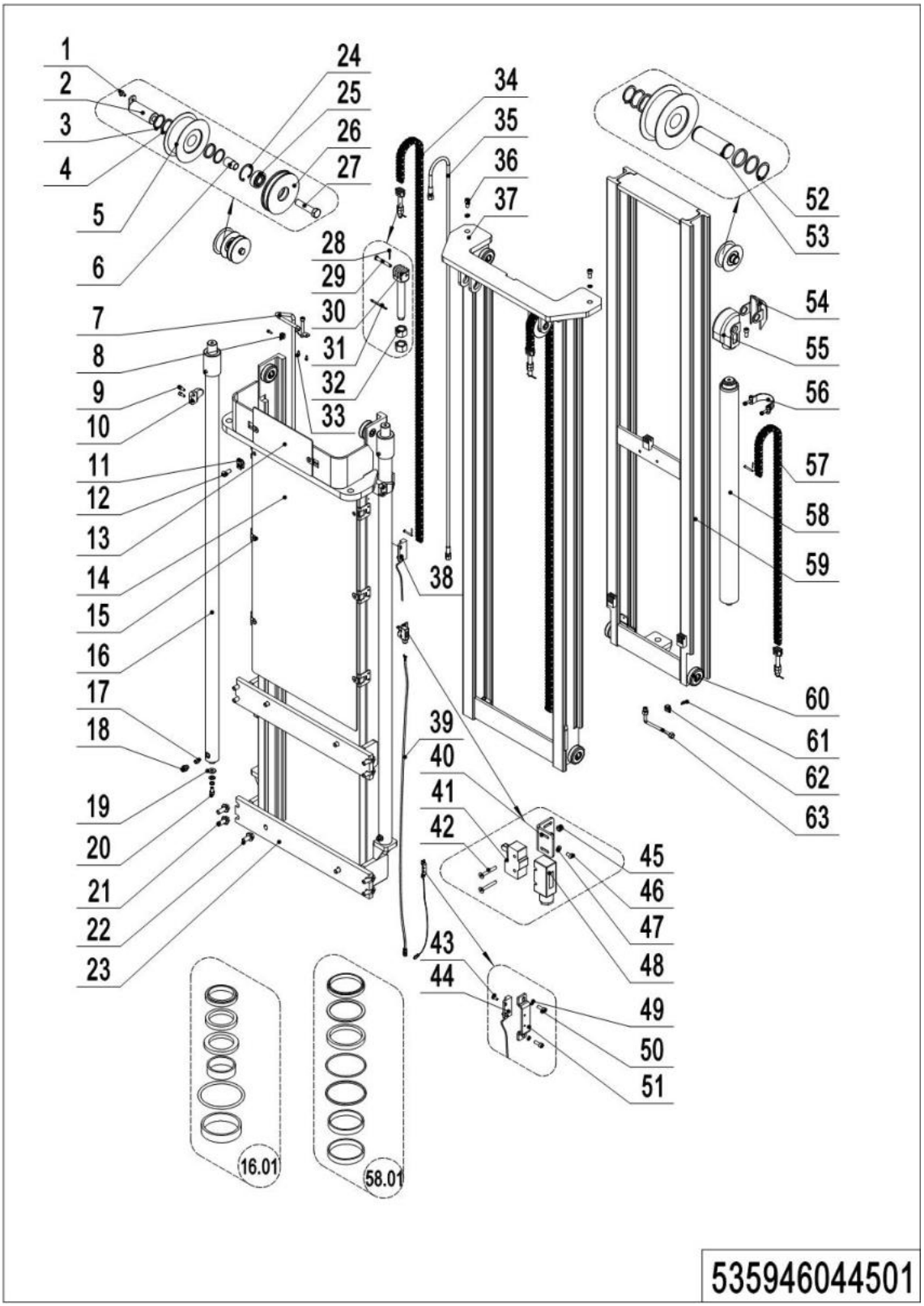

04 Triple Mast Full Free Lift (535946044501) Continuation 3

No.	Item Code	Mark	Item Description	Qty.	Substitute	Note
45	910300500001	1	Nut	4		
46	910200300005	1	Screw	4		
47	910400100003	1	Flat Washer	4		
48	920200300008		Protective Cover	1		
49	910400500003		Spring Washer	4		
50	910200200014	1	Screw	4		
51	534744520059		Protective Cover	2		
51	534744520080		Protective Cover	2		**EN1175-2020**
52	910401300016	1	Circlip	2		
53	532644520037		Axle	1		
54	532644520036		Side Cover	1		
55	532644520035		Yoke	1		
56	940800600002		Hoop	1		
57	534744510046		Chain	1		3400
57	532644510075		Chain	1		4000
57	532644510077		Chain	1		4300
57	251044510096		Chain	1		4600
57	532644510073		Chain	1		5300
57	535944510000		Chain	1		5500
58	534744510045		Cylinder	1		3400
58	534744510015		Cylinder	1		4000
58	534744510013		Cylinder	1		4300
58	534744510012		Cylinder	1		4600
58	534744510014		Cylinder	1		5300
58	534744510029		Cylinder	1		5500
58.01	534798510001		Seal Kit	1		
59	534744510043	2	Inner Mast(3400)	1		3400
59	534744510011	2	Inner Mast(4000)	1		4000
59	534744510009	2	Inner Mast(4300)	1		4300
59	534744510008	2	Inner Mast(4600)	1		4600

04 Triple Mast Full Free Lift (535946044501) Continuation 4

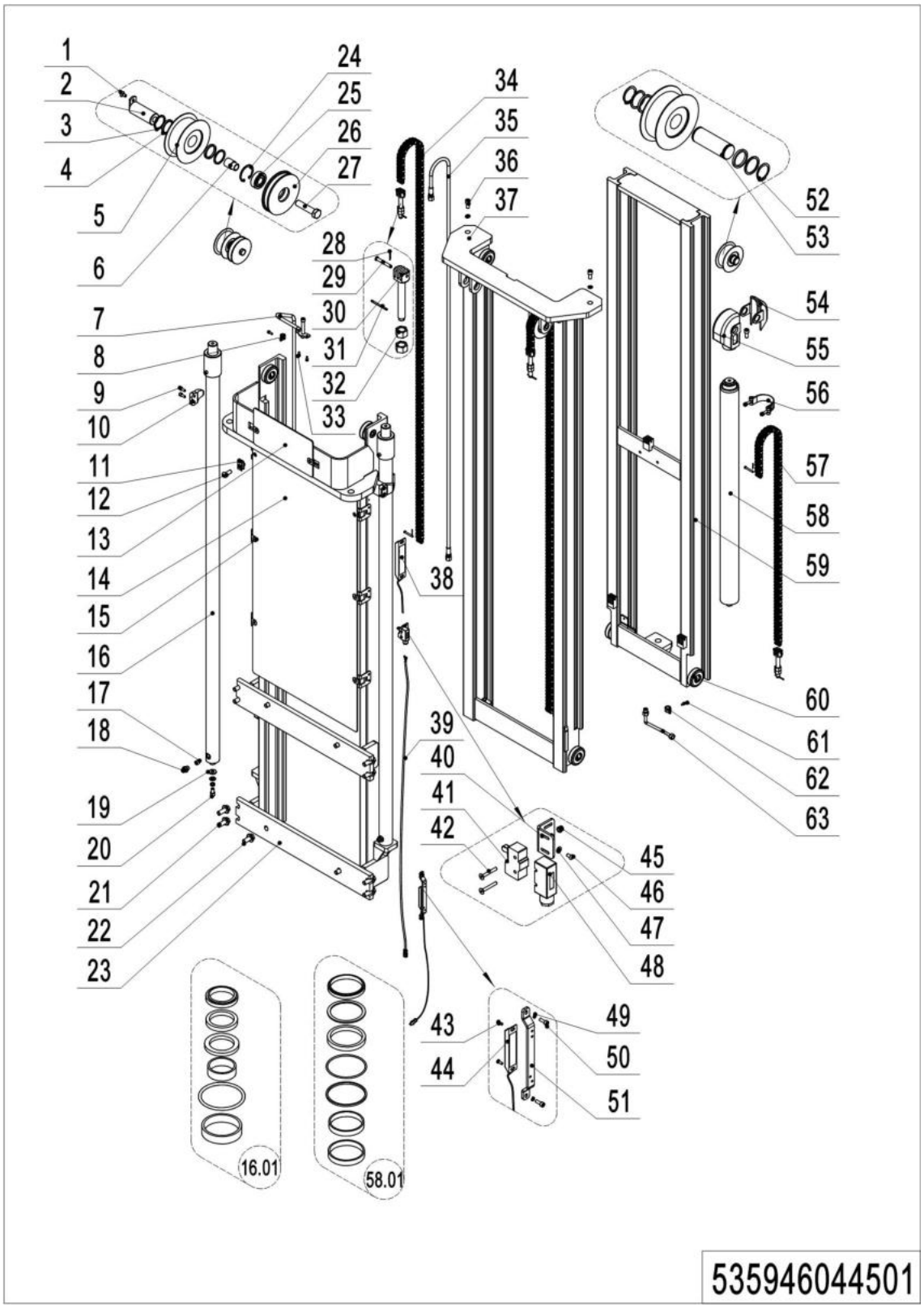

04 Triple Mast Full Free Lift (535946044501) Continuation 4

No.	Item Code	Mark	Item Description	Qty.	Substitute	Note
59	534744510010	2	Inner Mast(5300)	1		5300
59	534744510034	2	Inner Mast(5500)	1		5500
60	940200300004		Compound Roller	8		
61	910200200032	1	Screw	1		
62	951000100003		Hose Clamp	1		
63	533544520006		Steel Tube	1		

Chapter 5: Steering System, Braking System, Wheels

01 Handle assembly(504446011001)

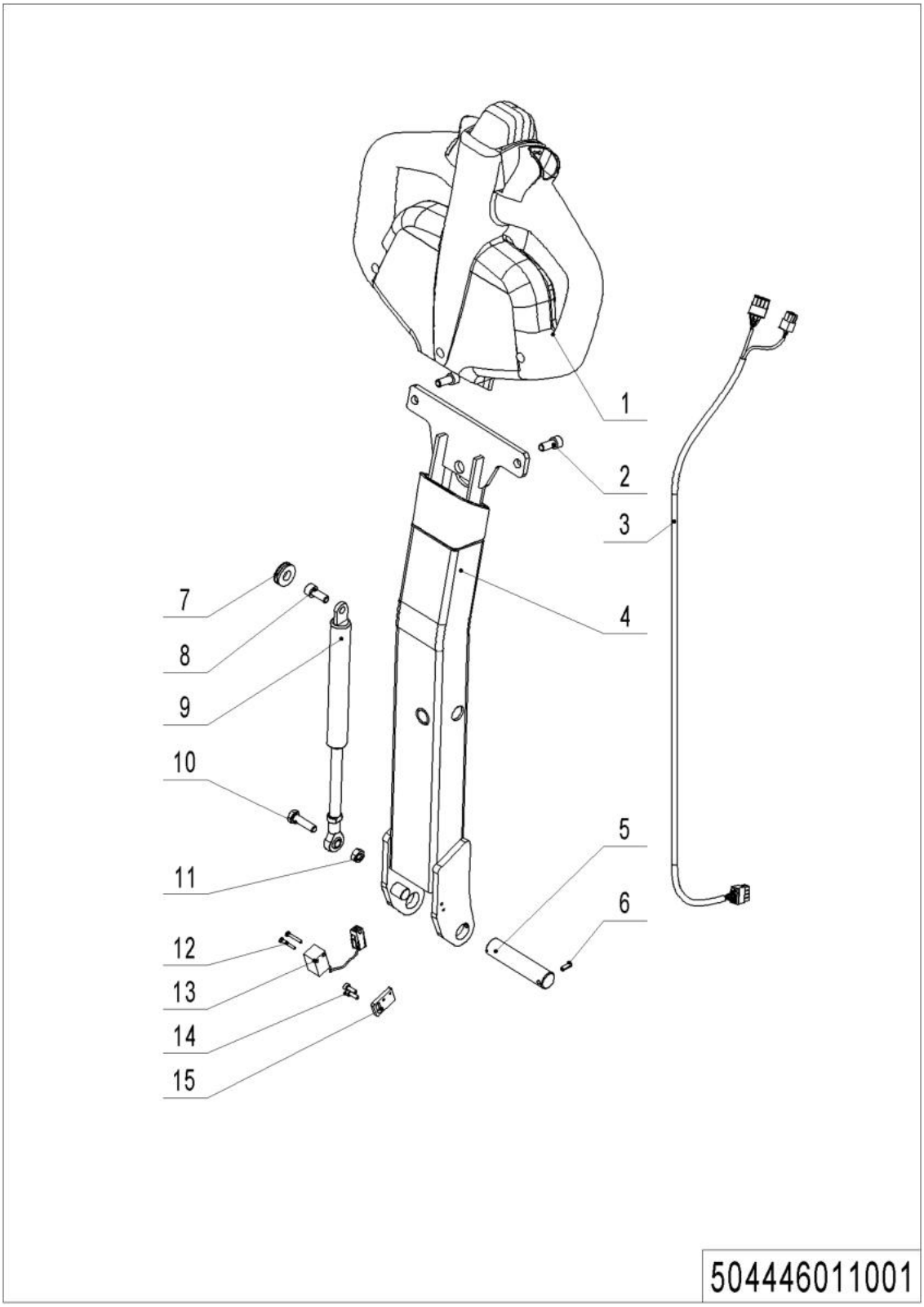

01 Handle assembly (504446011001)

No.	Item Code	Mark	Item Description	Qty.	Substitute	Note
1	922100100001		Tiller	1		See 535946011002
1	922100100099		Tiller	1		EN1175:2020, See 505646011004
2	910200200057	1	Screw	2		
3	534733010001		Wire Harness	1		
3	534733010032		Wire Harness	1		EN1175:2020
4	504411010001		Tiller	1		
5	504411020011		Axle	1		
6	910600400009	1	Spring Pin	1		
7	502311020009		Close Plate	1		
8	941100400001	1	Screw	1		
9	940400100011		Air Spring	1		
10	910100300024	1	Bolt	1		
11	910300100006	1	Nut	1		
12	910200500015	1	Screw	2		
13	505633510002		Proximity Switch	1		
14	910200200014	1	Screw	2		
15	504411020009		Baseboard	1		

02 Control Handle (505646011004)

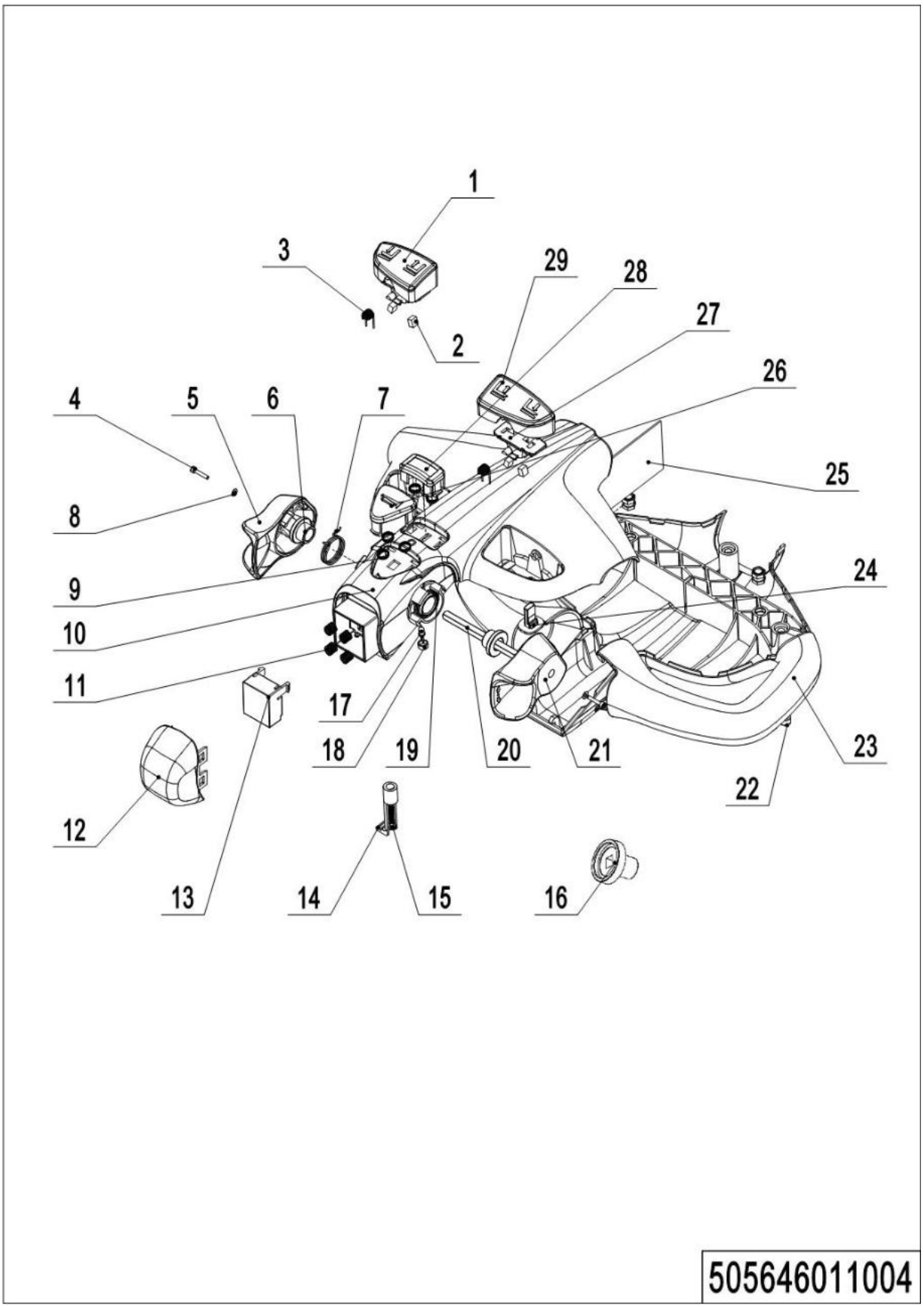

02 Control Handle (505646011004)

No.	Item Code	Mark	Item Description	Qty.	Substitute	Note
--	922100100001		Tiller	1		
--	922100100099		Tiller	1		EN1175:2020
1	505698520016		Button cap	1		
2	505698520005		Magnet	4		
3	505698520018		Torsional Spring	2		
4	505698520008		Screw	2		
5	505698520001		Traction lever	1		
6	505698520004		Sleeve	2		
7	505698520027		Torsional Spring	1		
8	505698520009		Washer	2		
9	505698520003		Spring	5		
10	505698520014		Handle Cap	1		
10	505698520099		Spring	1		EN1175:2020
11	505698520006		Button Cap-	4		
12	505698520020		Pedestal	1		
13	505698520019		Clamp			
13	505698520100		Screw	1		EN1175:2020
14	505698520012		Magnet holder	1		
15	505698520023		Light	1		
16	505698520102		Lamp Holder	2		
17	505698520024		Torsional Spring	1		
18	505698520025		Axle-Traction lever	1		
19	505698520026		Traction lever	1		
20	505698520011		Screw	1		
21	505698520010		Handle Cap	1		
22	505698520007		Sensor	3		
23	505698520015		circuit Board	1		
24	505698520013		Screw	2		
25	505698520028		Traction lever			
25	505698520101		Sleeve	1		EN1175:2020

02 Control Handle (505646011004) Continuation

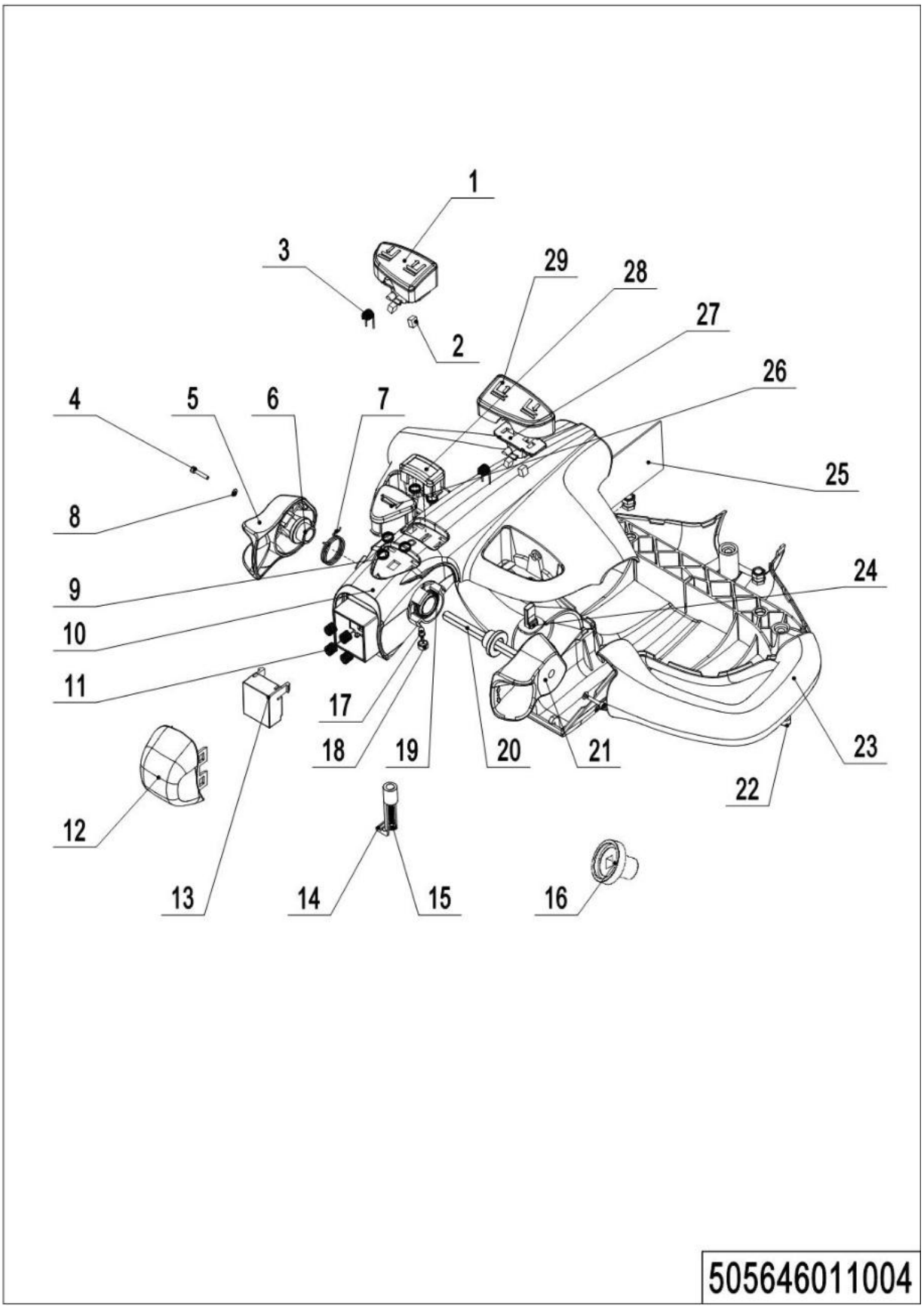

02 Control Handle (505646011004) Continuation

No.	Item Code	Mark	Item Description	Qty.	Substitute	Note
26	505698520002		Horn Button	1		
27	505698520017		Fixing Base	2		
28	505698520021		Button Cap	1		
29	505698520022		Button Cap	1		

03 Load Wheel (561746017001)

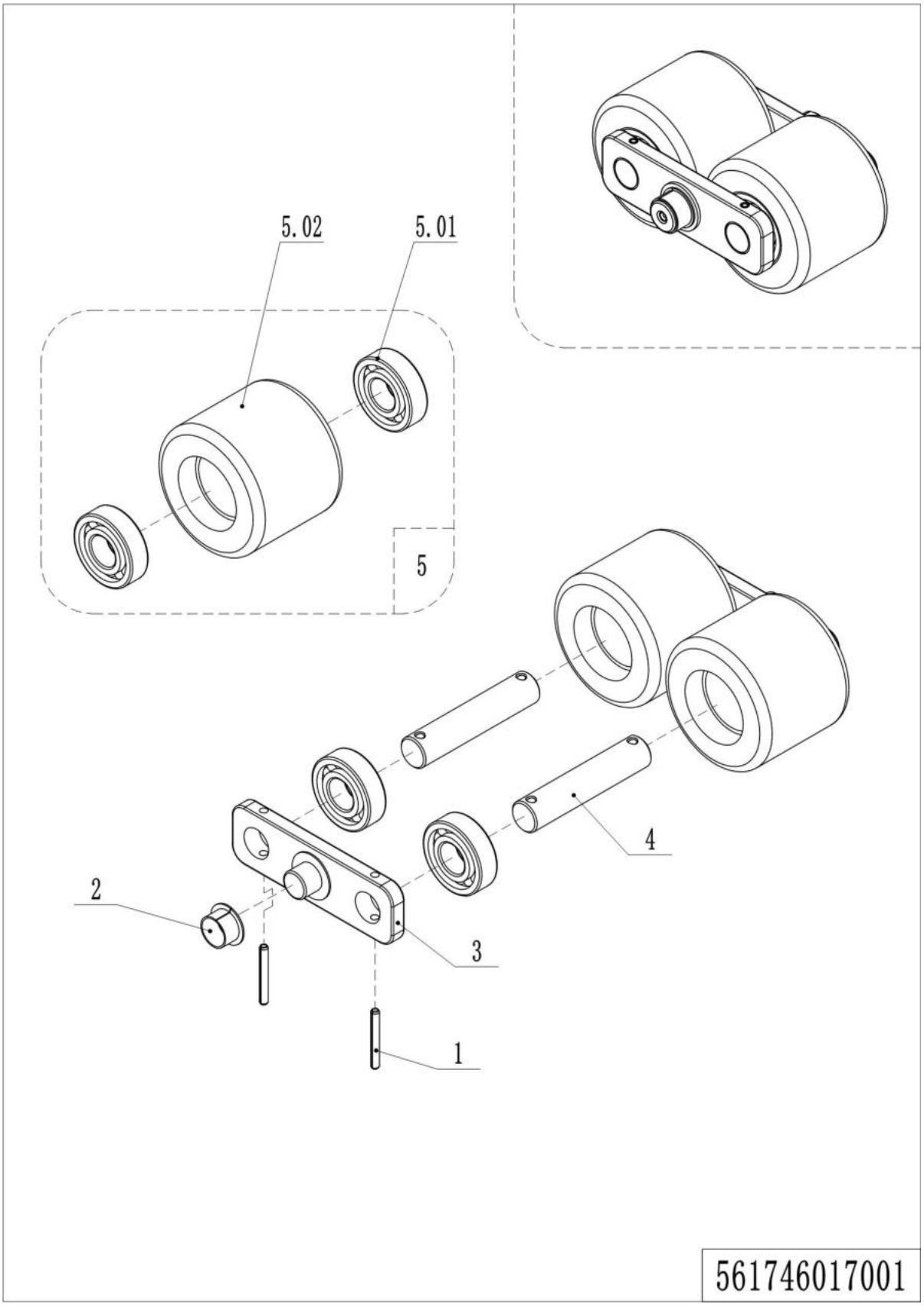

1= Supply as package. 2= Supply with constraints. 3= Phasing-out supply. 4= Supply as assembly. 5= Check other tables.

03 Load Wheel (561746017001)

No.	Item Code	Mark	Item Description	Qty.	Substitute	Note
--	562098510002		Wheel	2		
1	910600400028		Spring Pin	4		
2	940500200003		Bushing	4		
3	505617020001		Plate	4		
4	560517020000		Axle	4		
5	532998510001		Wheel	4		
5.01	910700200019		Bearing	8		
5.02	940300300009		WheelΦ84x70	4		

04 Caster (534746016501)

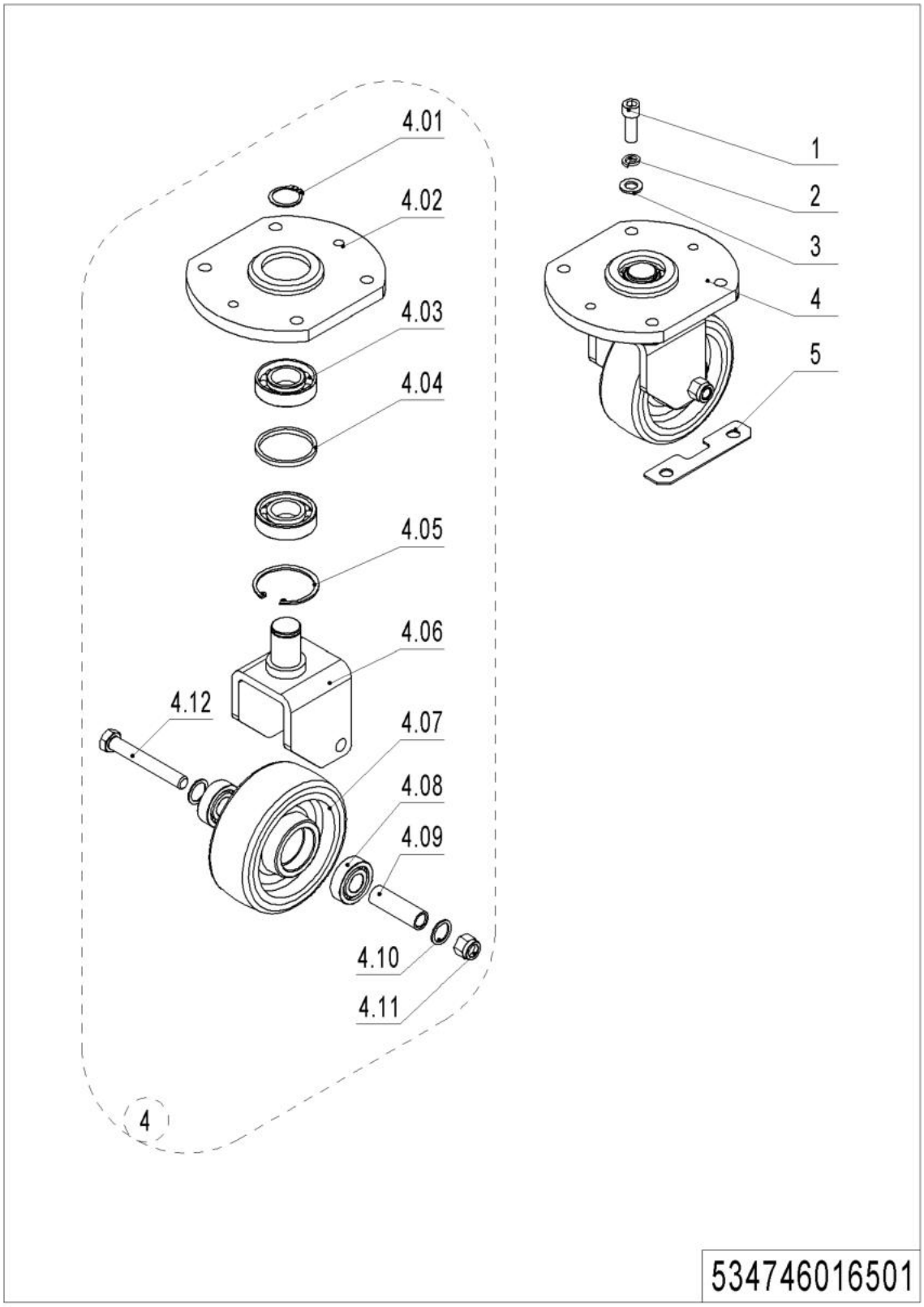

1= Supply as package. 2= Supply with constraints. 3= Phasing-out supply. 4= Supply as assembly. 5= Check other tables.

04 Caster (534746016501)

No.	Item Code	Mark	Item Description	Qty.	Substitute	Note
1	910200200099	1	Screw	4		
2	910400500008	1	Spring Washer	4		
3	910400100008	1	Flat Washer	4		
4	534716510002		Caster Assembly	1		
4.01	910401300016	1	Circlip	1		
4.02	534716510000		Bracket	1		
4.03	910700400004		Bearing	2		
4.04	532616520001	1	Check Ring	1		
4.05	910401400018	1	Circlip	1		
4.06	534716510001	2	Wheel Carrier	1		
4.07	940300300020		WheelΦ150x54	1		
4.08	910700200019		Bearing	2		
4.09	532616520003		Bushing	1		
4.10	940600500014	1	Washer	2		
4.11	910300500007	1	Nut	1		
4.12	910100100069	1	Bolt	1		
5	534721520026		Subplate	6		

Chapter 6: Electrical Parts

01 Display Assembly (534746010001)

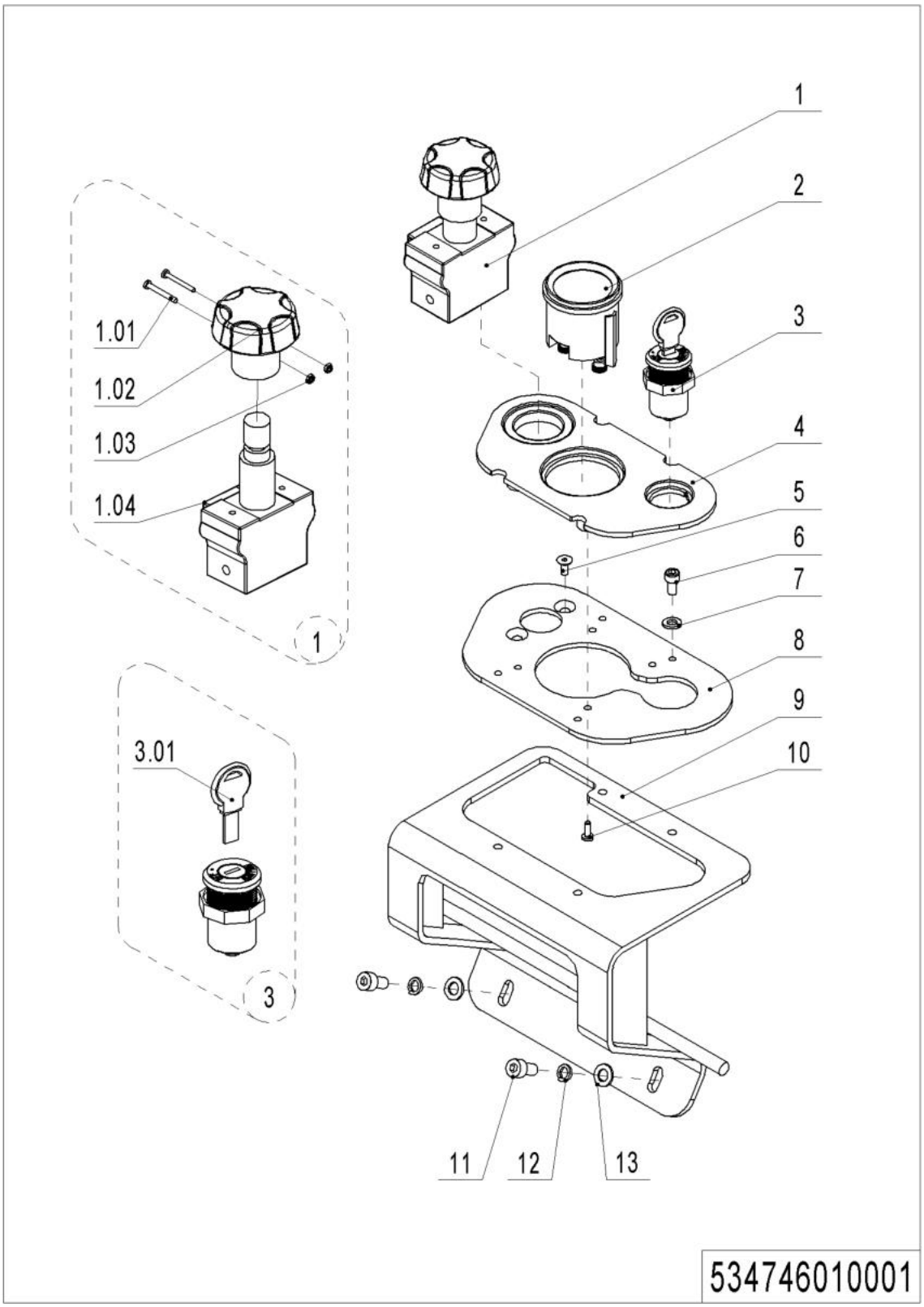

01 Display Assembly (534746010001)

No.	Item Code	Mark	Item Description	Qty.	Substitute	Note
1	920200100001		Emergency Button	1		
1.01	910200500016		Screw	2		
1.02	505698520029		Button	1		
1.03	910300100002		Nut	2		
1.04	505698520030		Proximity Switch	1		
2	921100100012		Display	1		
2	921100100116		Display	1		EN1175:2020
3	505634010000		Key Switch	1		
3	505634010001		Key Switch	1		lithium battery
3.01	505698520031		Key	1		
4	534710020004		Panel	1		
5	910200400010		Screw	2		
6	910200200036		Screw	4		
7	910400100005		Flat Washer	4		
8	534710020005		Fixing Base	1		
9	534710010000		Mounting Plate	1		
10	910201300001		Screw	4		
11	910200200055		Screw	2		
12	910400500006		Spring Washer	2		
13	910400100006		Flat Washer	2		

02 Electronic Components (561746033001)

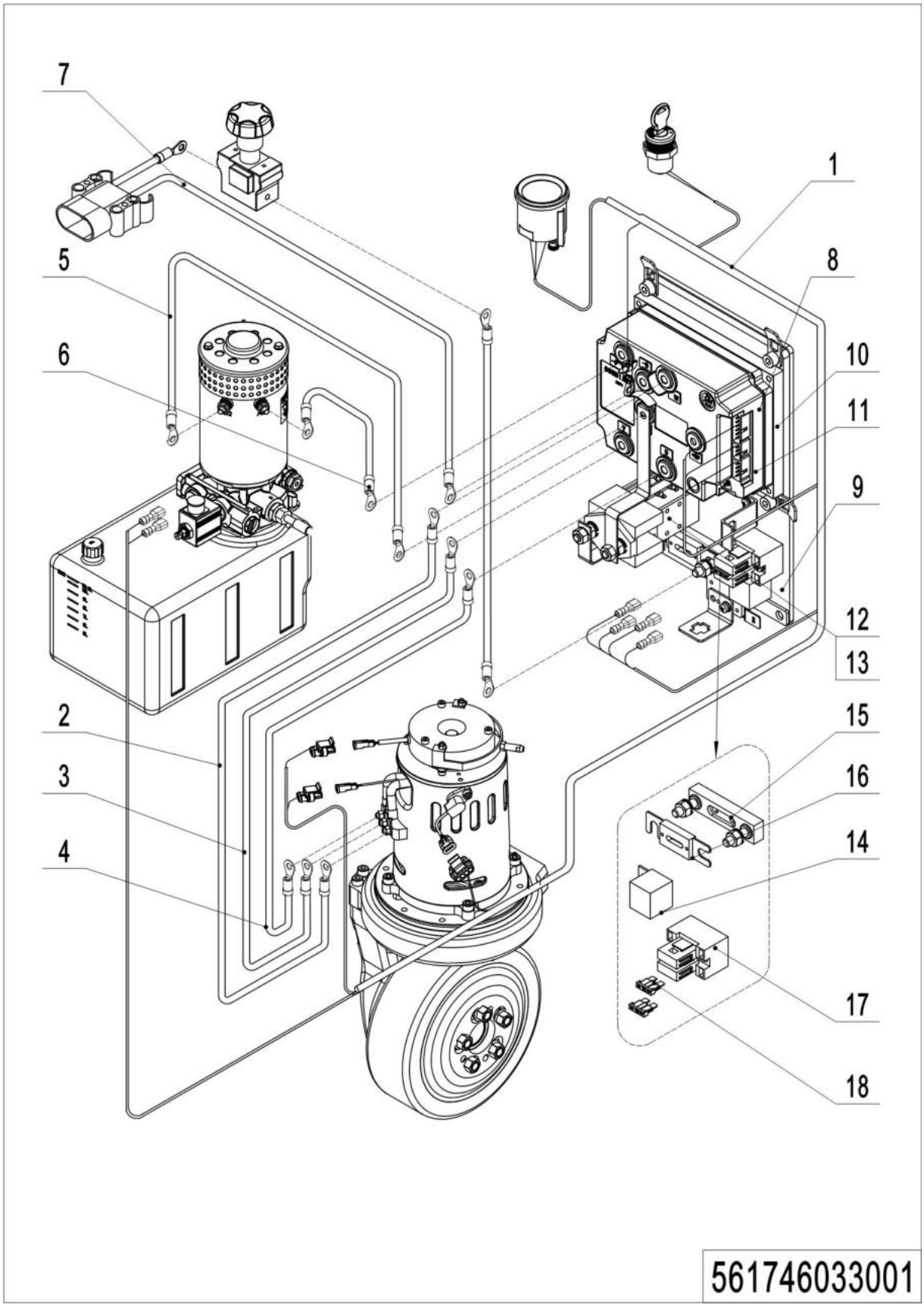

1= Supply as package. 2= Supply with constraints. 3= Phasing-out supply. 4= Supply as assembly. 5= Check other tables.

02 Electronic Components (561746033001)

No.	Item Code	Mark	Item Description	Qty.	Substitute	Note
1	561733010000		Wire Harness			
2	534733010003		Cable			
3	534733010004		Cable			
4	534733010005		Cable			
5	534733010006		Cable			
6	534733010007		Cable			
7	561733010003		Wire Harness			
8	561733010004		Electronic Components			
9	534721520027		Mounting Plate			
10	534733020000		Plate			
11	921400100048		Controller			
12	920700100002		Contactor			
13	921300400004		Holder			
14	920800100001		Relay			
15	920100400002		Fuse Holder			
16	920100100013		Fuse			
17	920100400005		Fuse Holder			
18	920100200002		Fuse			

02 Electronic Components (EN1175:2020) (561746033011)

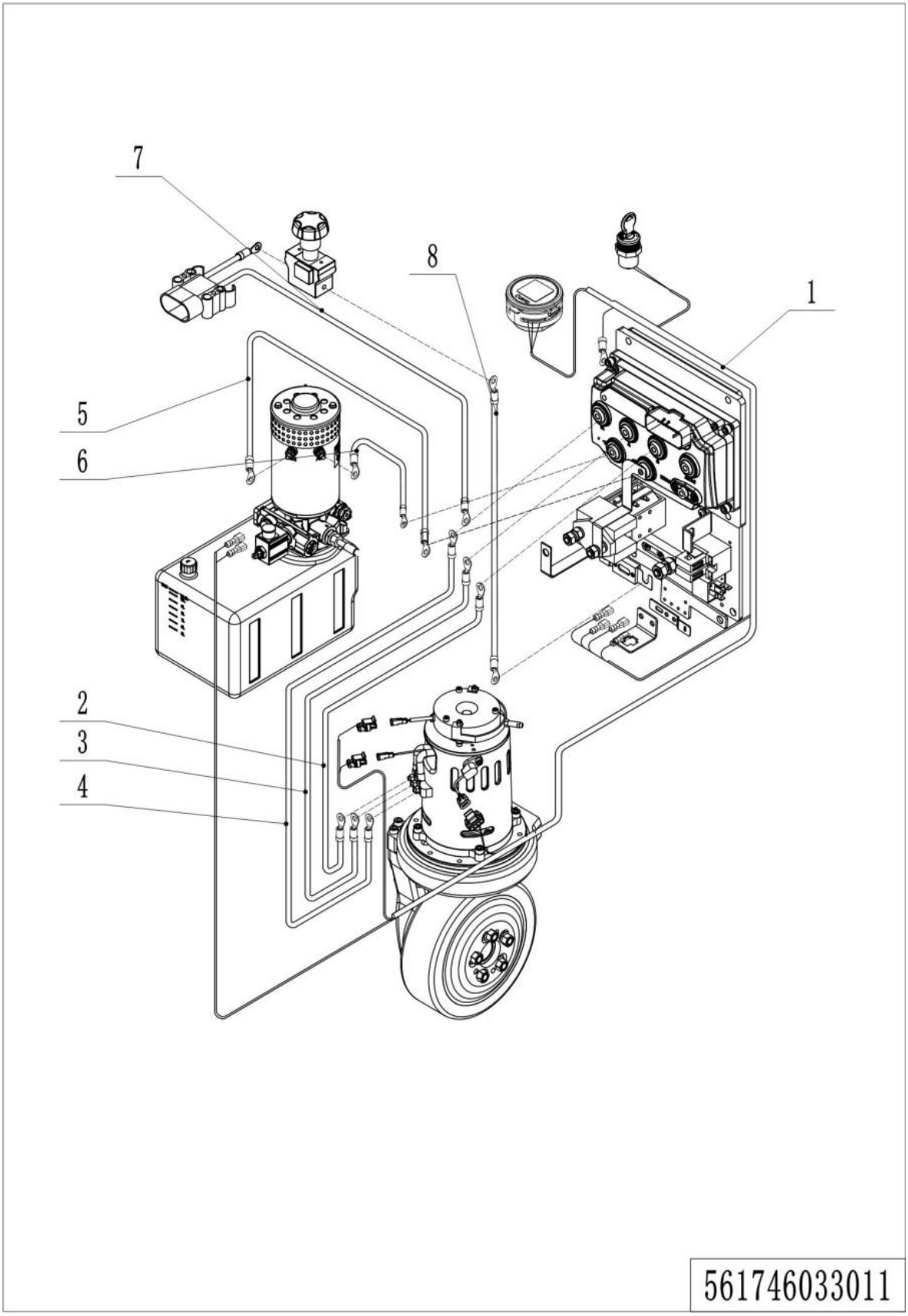

02 Electronic Components (EN1175:2020) (561746033011)

No.	Item Code	Mark	Item Description	Qty.	Substitute	Note
1	561733010011		Wire Harness	1		
1	561733010012		Wire Harness	1		lithium battery
2	561733010017		Cable	1		
3	561733010018		Cable	1		
4	561733010019		Cable	1		
5	561733010020		Cable	1		
6	561733010021		Cable	1		
7	561733010003		Cable	1		
7	561733010010		Cable	1		lithium battery
8	534733010009		Cable	1		

03 Electric control assembly (EN1175:2020) (561746033013)

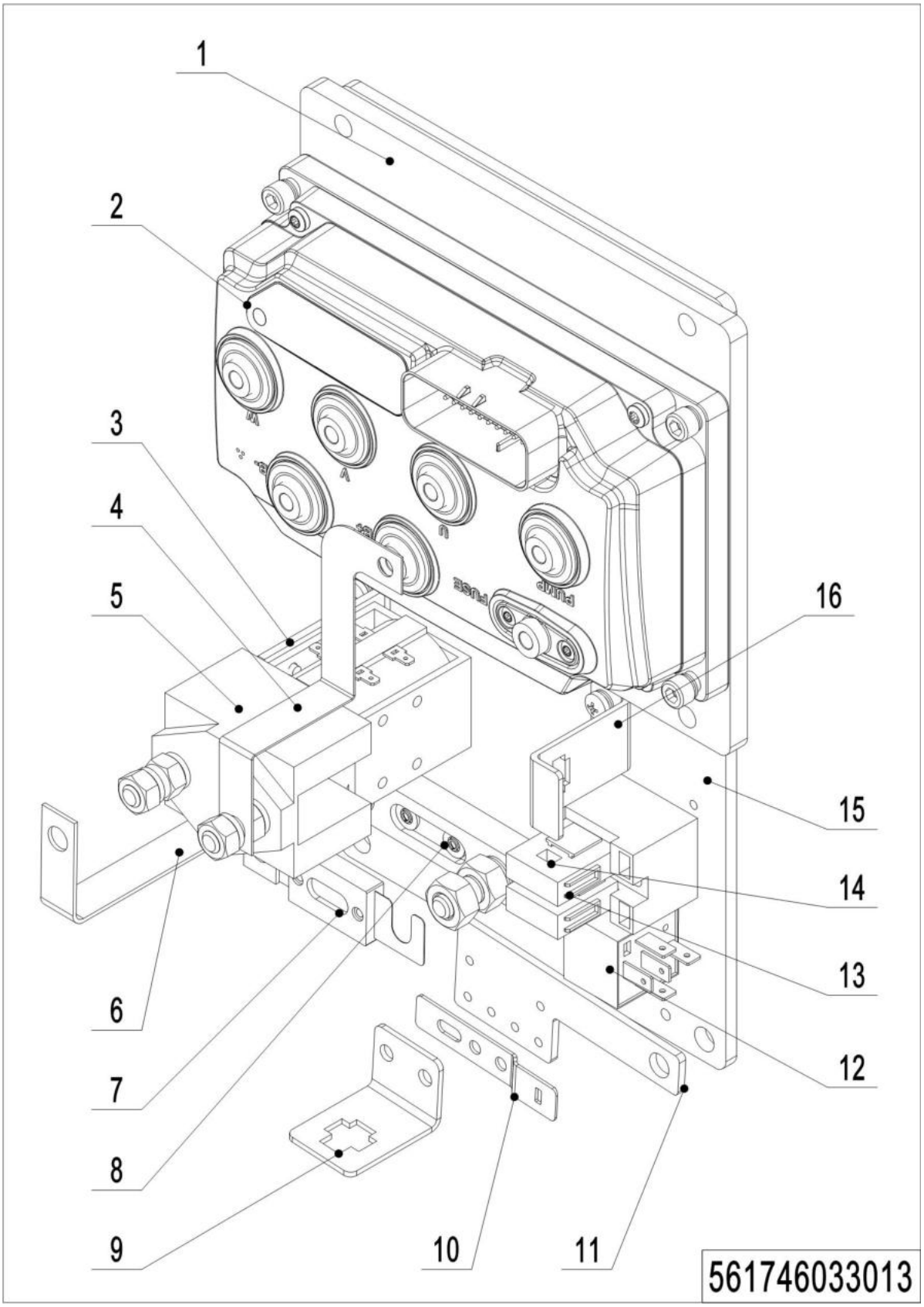

1= Supply as package. 2= Supply with constraints. 3= Phasing-out supply. 4= Supply as assembly. 5= Check other tables.

03 Electric control assembly (EN1175:2020) (561746033013)

No.	Item Code	Mark	Item Description	Qty.	Substitute	Note
1	534733020003		Aluminium plate	1		
2	921400100124		Controller	1		
3	534733020004		Copper bar	1		
4	921300400004		Fixed mount	1		
5	920700100002		Contactor	1		
6	534733020002		Copper bar	1		
7	920100100013		Fuse350A 350A	1		
8	920100400002		Fuse Holder	1		
9	921300300002		Fixed mount	1		
10	921300300005		Fixed mount	1		
11	921300300008		Fixed mount	1		
12	920800100011		Relay	1		
13	920100400005		Fuse Holder	1		
14	920100200002		Fuse10A 10A	1		
15	534721520027		Mounting plate	1		
16	921300300001		Fixed mount	1		

04 Charger (534746036501)

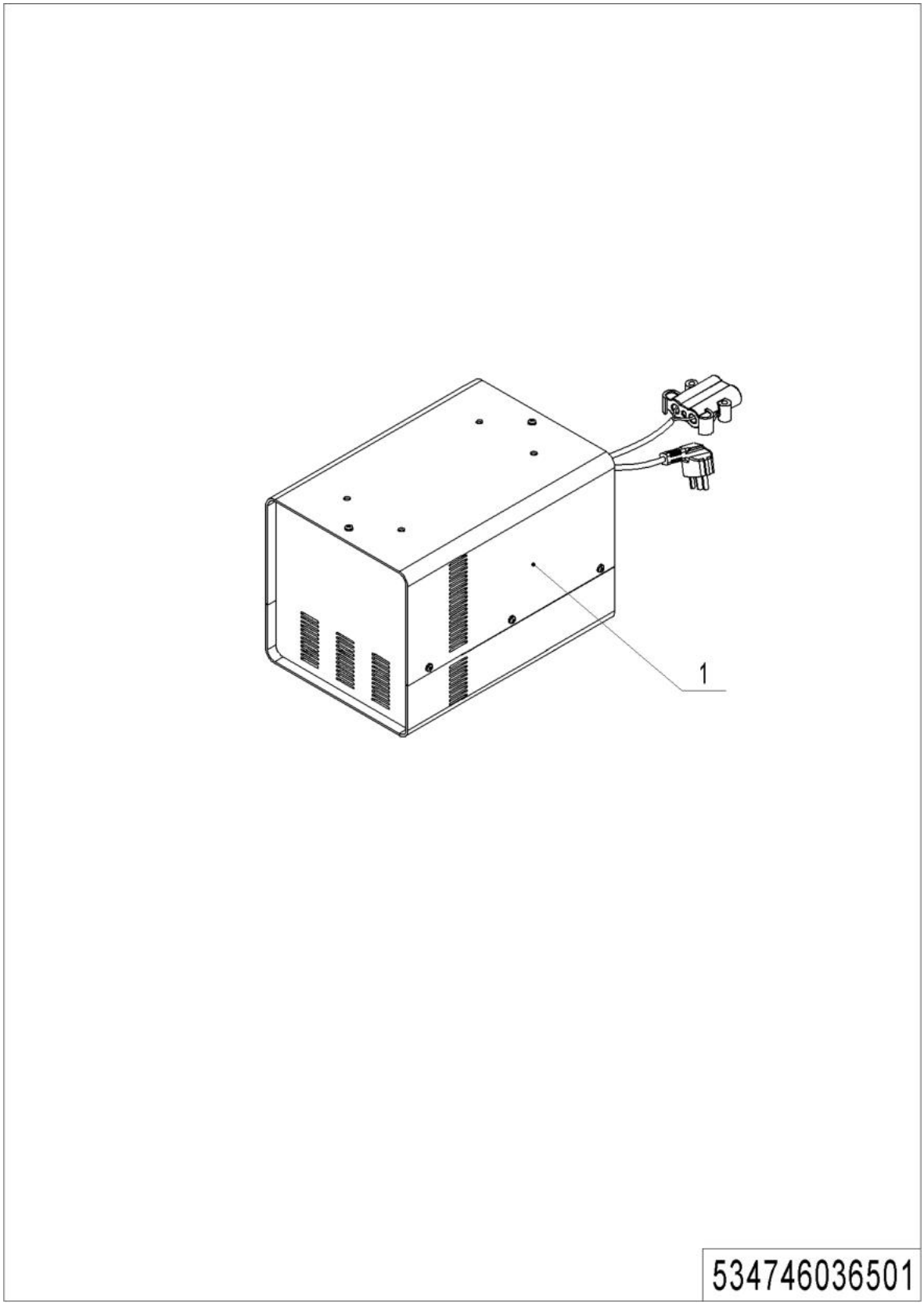

1= Supply as package. 2= Supply with constraints. 3= Phasing-out supply. 4= Supply as assembly. 5= Check other tables.

04 Charger (534746036501)

No.	Item Code	Mark	Item Description	Qty.	Substitute	Note
1	921000200183		Charger24V35A(Aisa-CHN)			
	921000200184		Charger24V35A(Aisa-ENG)			
	921000200185		Charger24V35A(EU)			
	921000200186		ChargerSN24V35A(ENG)			
	921000200187		ChargerSN24V35A(AUS)			
	921000200188		ChargerSN24V35A(USA)			
	921000200365		ChargerSN24V35A(ISR)			
	921000200342		ChargerSN24V35A(CH)			
	921000100041		Charger24V35A(Aisa-CHN)			
	921000200489		ChargerSN24V35A(BRA)			

05 Charger (lithium battery)(53444607002)

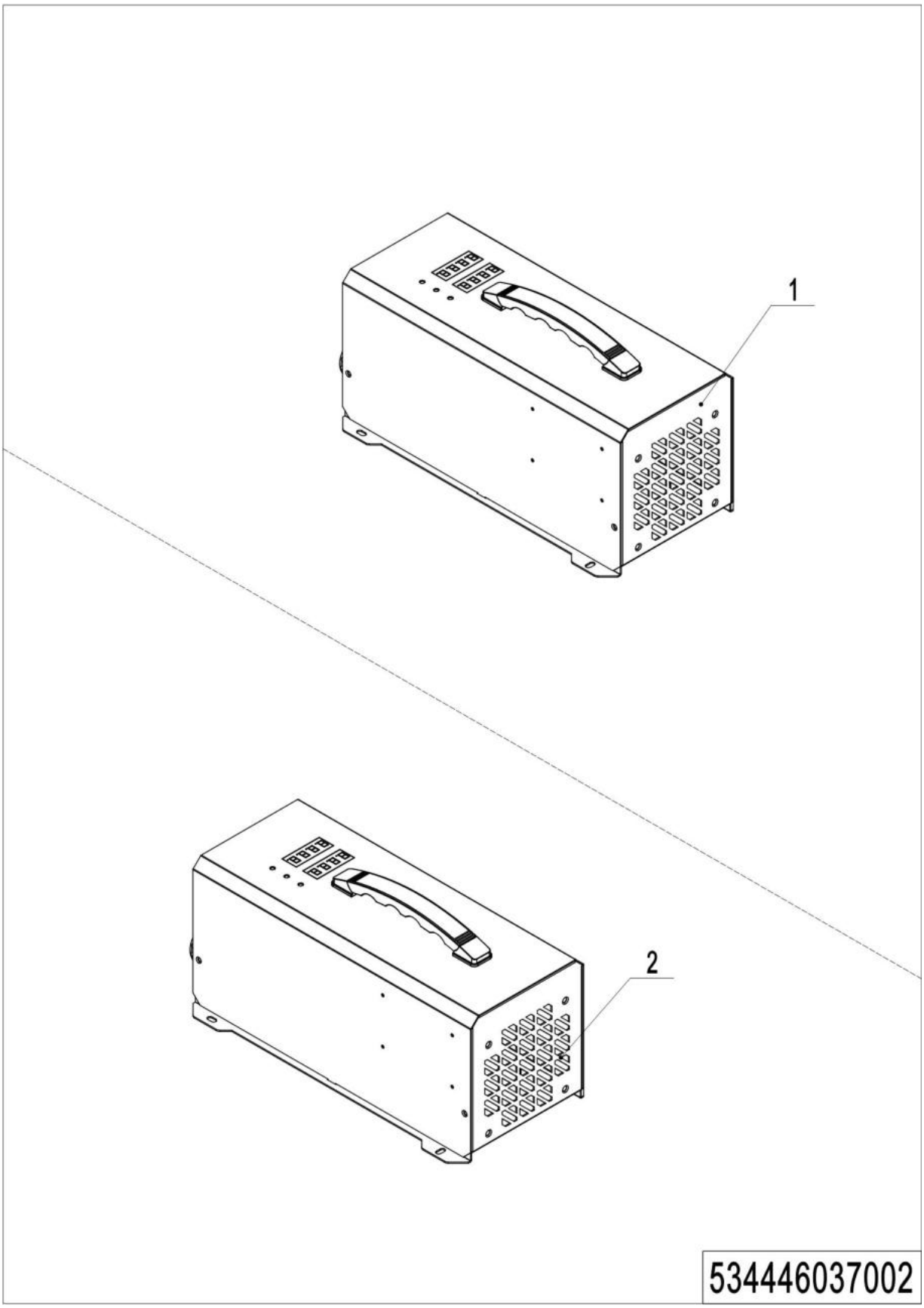

1= Supply as package. 2= Supply with constraints. 3= Phasing-out supply. 4= Supply as assembly. 5= Check other tables.

05 Lithium battery charger (534446036502)

No.	Item Code	Mark	Item Description	Qty.	Substitute	Note
1	921000200649		Li-ChargerSW24V60A(Aisa)	1		
1	921000200524		Li-Charger24V60A(EU)	1		
1	921000200525		Li-Charger24V60A(ENG)	1		
1	921000200526		Li-Charger24V60A(AUS)	1		
1	921000200527		Li-Charger24V60A(ISR)	1		
1	921000200537		Li-Charger24V60A(ARG)	1		
1	921000200528		Li-Charger24V60A(ARG)			
1	921000200529		Li-Charger24V60A(ZA）	1		IND
1	921000200530		Li-Charger24V60A(USA)	1		
1	921000200631		Li-Charger24V60A(THA)	1		
2	921000200652		Li-ChargerSW24V80A(Aisa-CN)	1		
2	921000200532		Li-ChargerSW24V80A(Aisa-EN)	1		
2	921000200533		Li-Charger24V80A(EU)	1		
2	921000200534		Li-Charger 24V80A(ENG)	1		
2	921000200535		Li-Charger24V80A(AUS)	1		
2	921000200536		Li-Charger24V80A(ISR-ENG)	1		
2	921000200538		Li-Charger24V80A（ZA）	1		IND
2	921000200539		Li-Charger 24V80A(USA)	1		Anderson80

06 Traction Battery (534746037001)

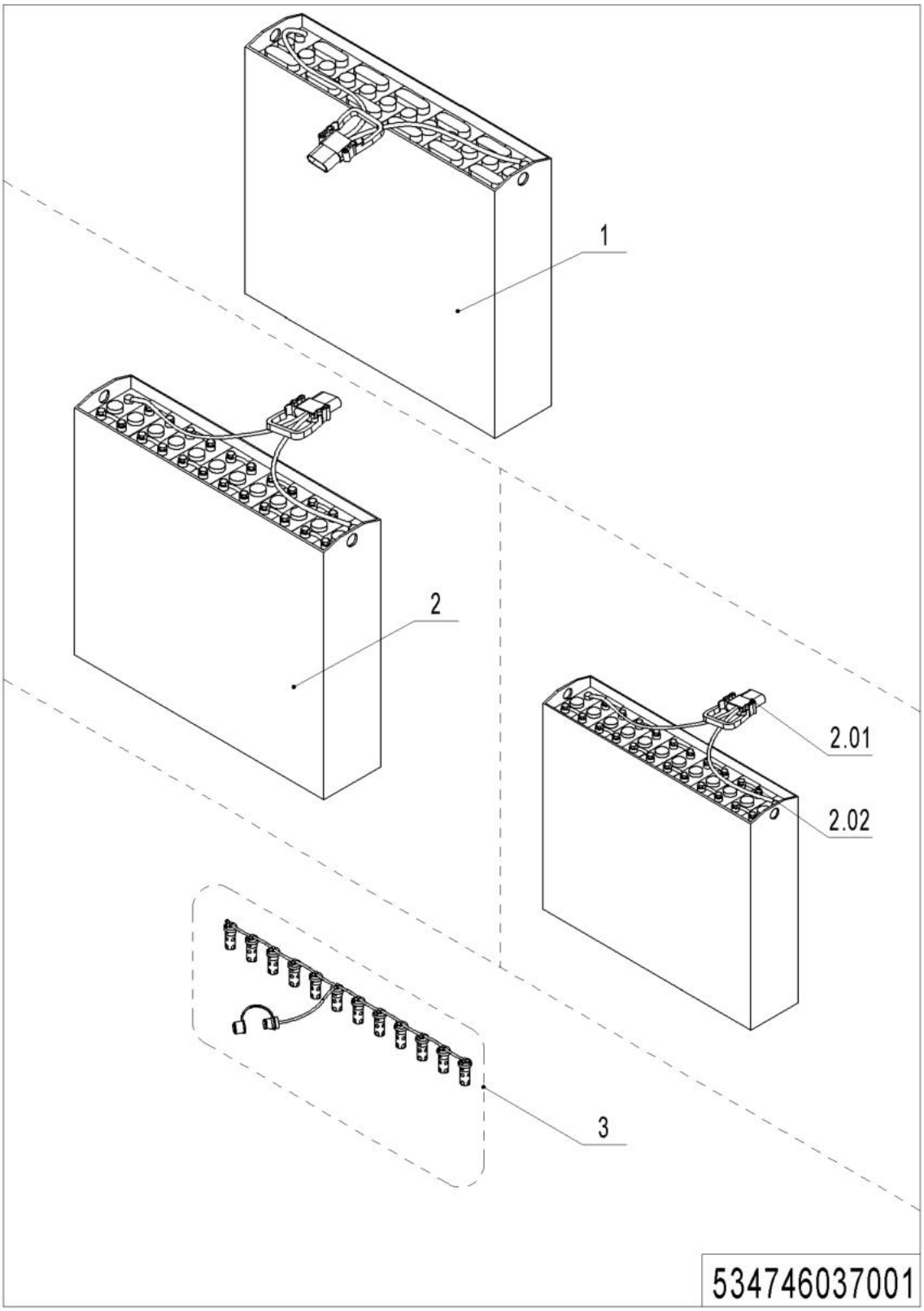

1= Supply as package. 2= Supply with constraints. 3= Phasing-out supply. 4= Supply as assembly. 5= Check other tables.

06 Traction Battery (534746037001)

No.	Item Code	Mark	Item Description	Qty.	Substitute	Note
1	534737010000		Battery24V270Ah(welded)	1		
1	920600100593		Battery24V270Ah(welded)	1		EN1175:2020
2	534737010001		Battery24V270Ah	1		
2	920600100517		Battery24V270Ah	1		EN1175:2020
2.01	920400100007		Connector	1		For all battery
2.02	505698520000		Bolt	24		For bolted battery
3	535937110000		Water refilling system	1		Optional, assemble as needed

07 Traction Battery (lithium battery) (534446037002)

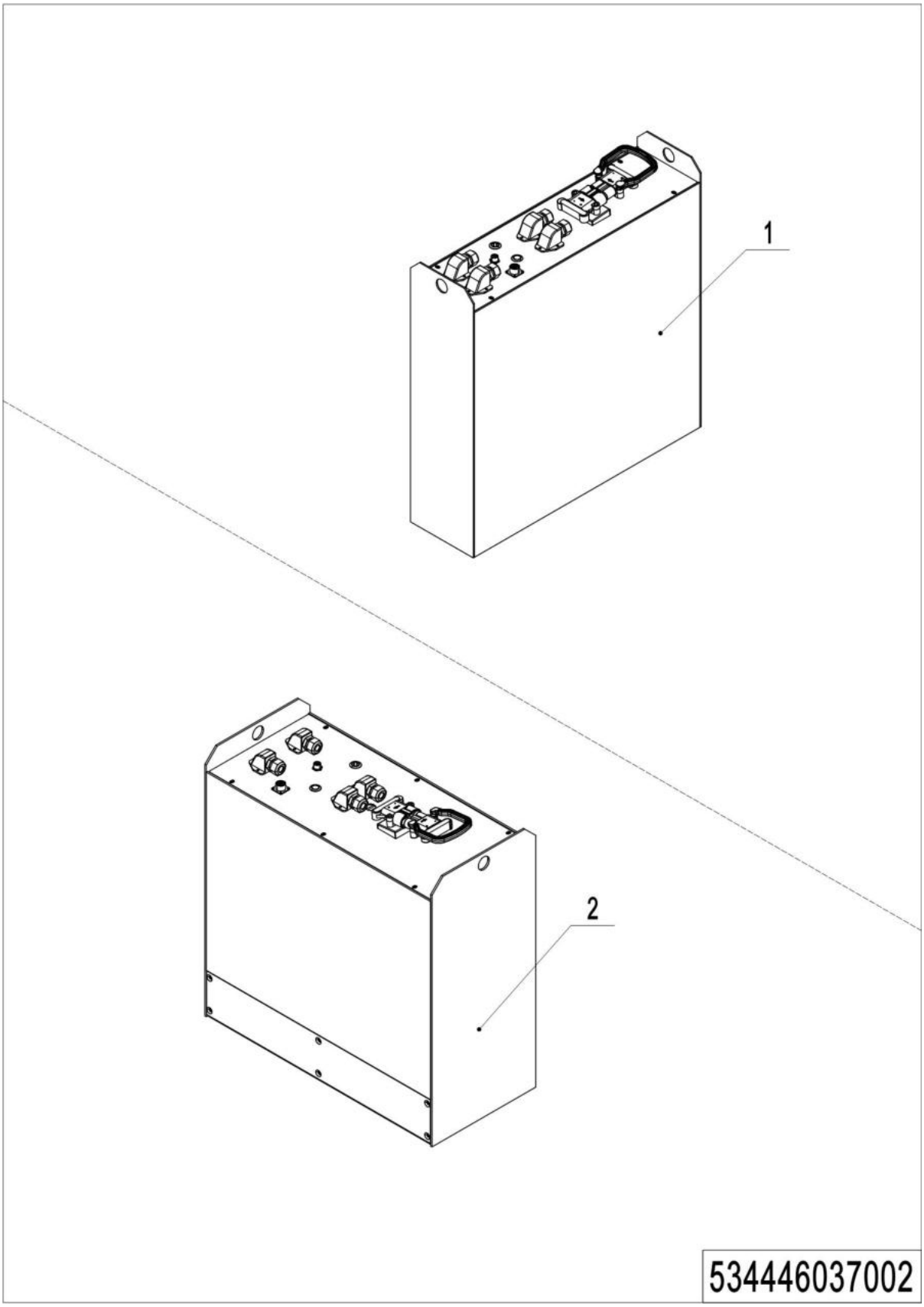

1= Supply as package. 2= Supply with constraints. 3= Phasing-out supply. 4= Supply as assembly. 5= Check other tables.

07 Traction Battery (lithium battery) (534446037002)

No.	Item Code	Mark	Item Description	Qty.	Substitute	Note
2	920600100342		Li-Battery 24V200Ah1HR-13			

Chapter 7: Special Parts

01 Load Backrest (532646040501)

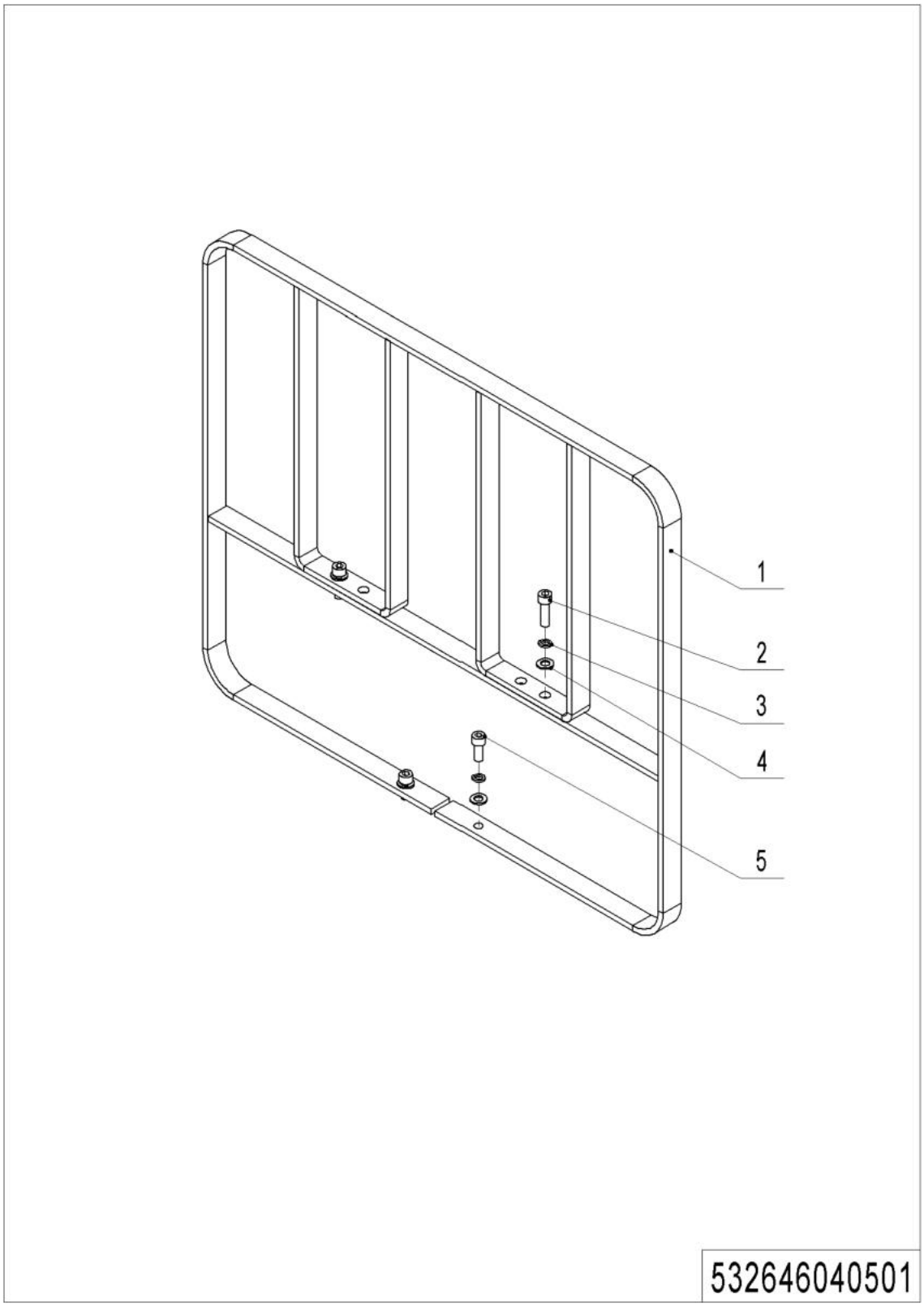

1= Supply as package. 2= Supply with constraints. 3= Phasing-out supply. 4= Supply as assembly. 5= Check other tables.

01 Load Backrest (532646040501)

No.	Item Code	Mark	Item Description	Qty.	Substitute	Note
1	532640510001	2	Load Backrest	1		
2	910200200076	1	Screw	2		
3	910400500007	1	Spring Washer	4		
4	910400100007	1	Flat Washer	4		
5	910200200078	1	Screw	2		

Chapter 8: Others

01 Label and Decal (EU) (562046047001)

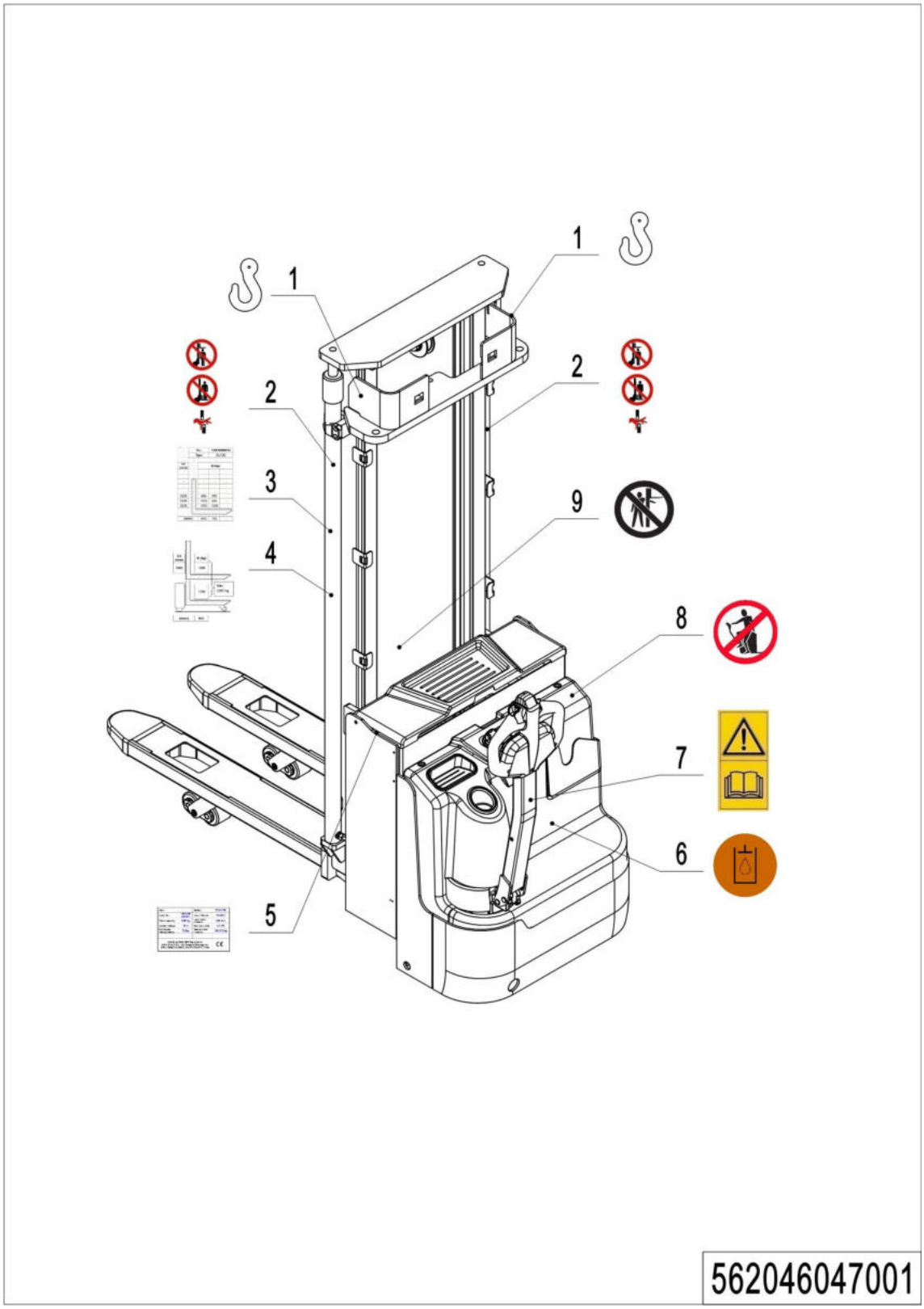

01 Label and Decal (EU) (562046047001)

No.	Item Code	Mark	Item Description	Qty.	Substitute	Note
1	941200300001		Label	2		
2	941200100004		Label	2		
3	562047520001		Label	1		
4	562047520020		Load Capacity Diagram	1		
5	561747520101		Truck data plate	1		
6	941200300003		Label	1		
7	941200300002		Label	1		
8	941200100003		Label	1		
9	941200100006		Label	1		

02 Label and Decal (US) (562046047002)

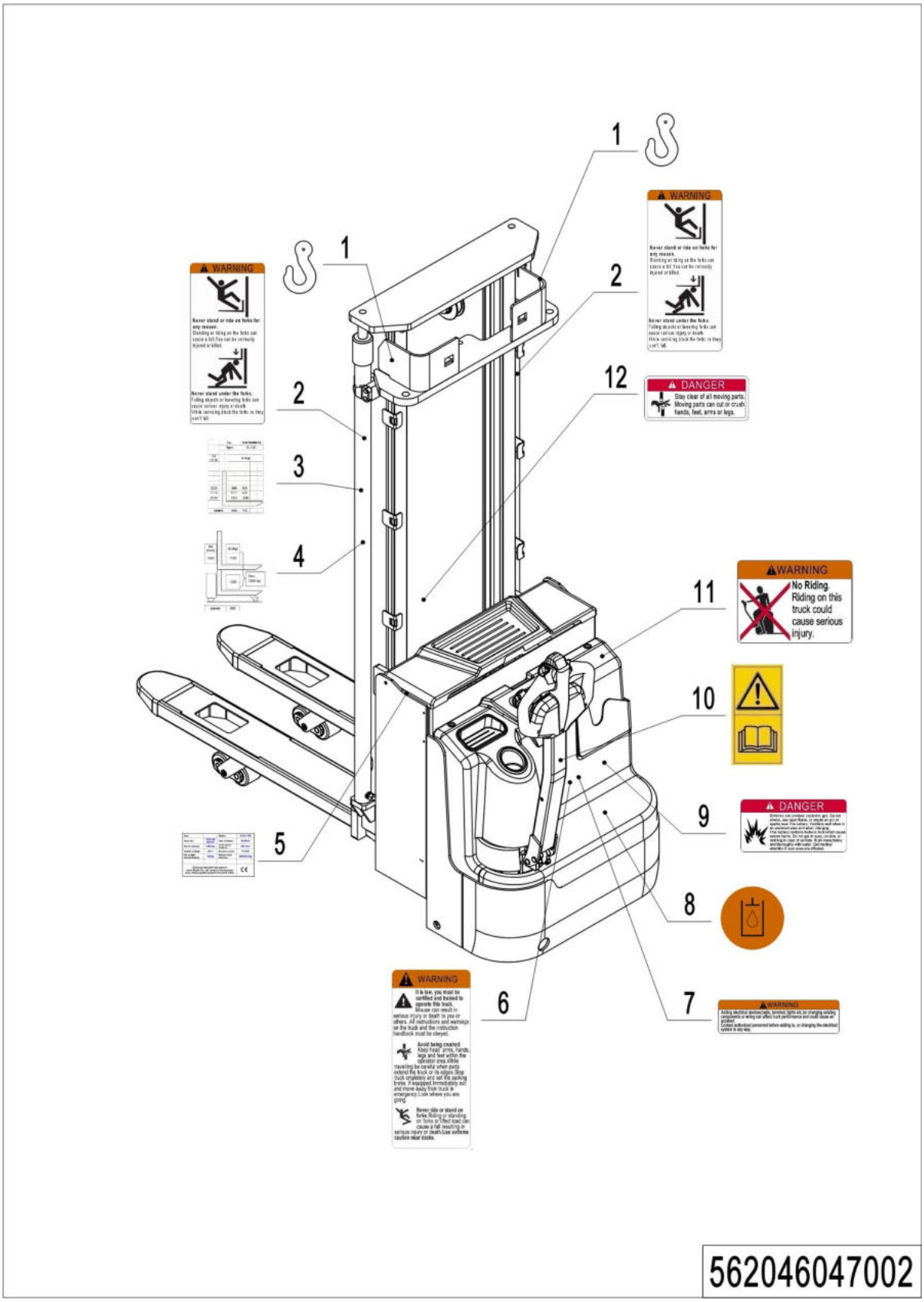

02 Label and Decal (US) (562046047002)

No.	Item Code	Mark	Item Description	Qty.	Substitute	Note
1	941200300001		Label	2		
2	941200100016		Label	2		
3	562047520001		Label	1		
4	562047520020		Load Capacity Diagram	1		
5	561747520101		Truck data plate	1		
6	941200100009		Label	1		
7	941200100010		Label	1		
8	941200300003		Label	1		
9	941200100013		Label	1		
10	941200300002		Label	1		
11	941200100011		Label	1		
12	941200100014		Label	1		

Appendix

01 Electrical Circuit Diagram (561746045510)

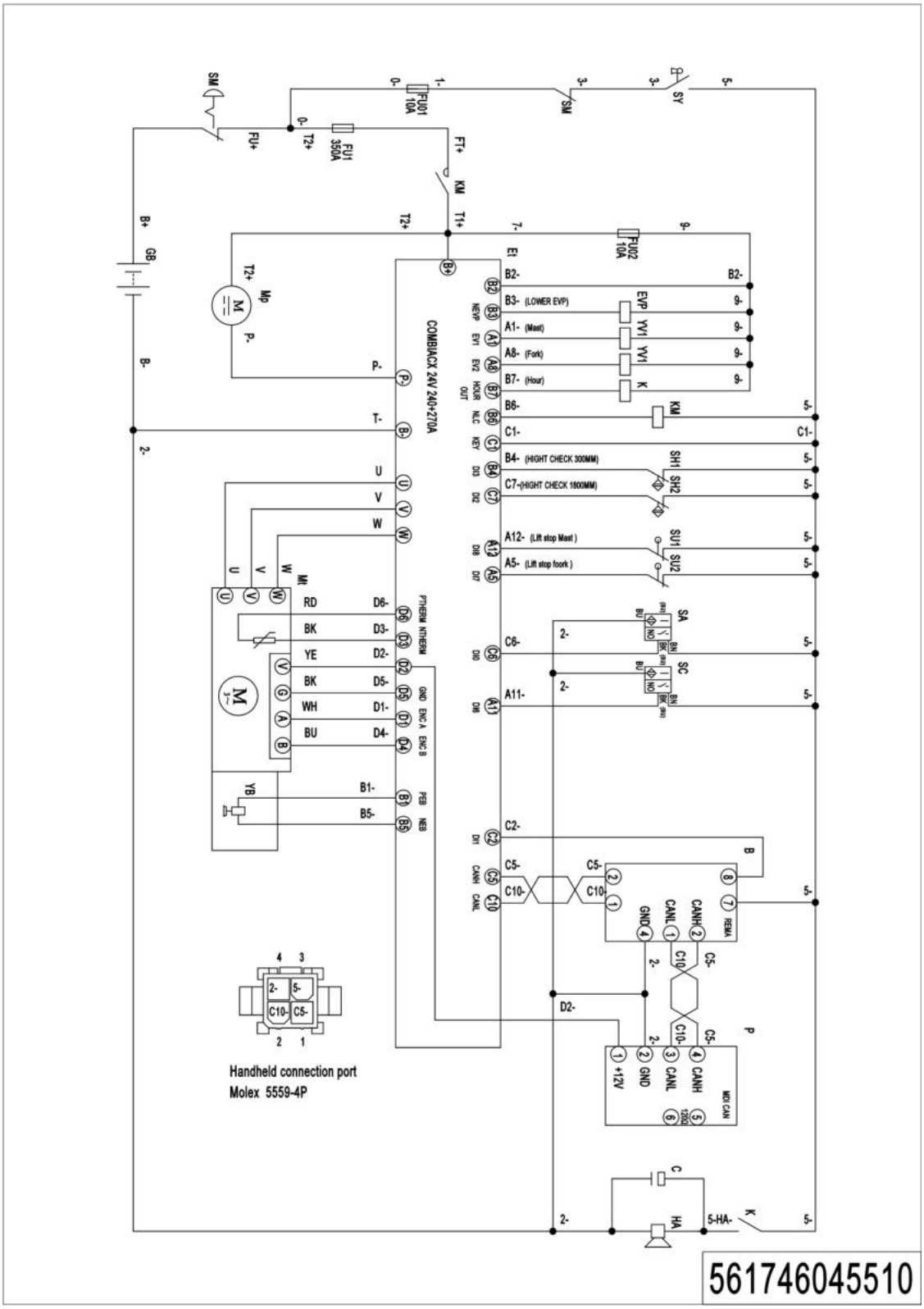

01 Electrical Circuit Diagram (EN1175:2020) (561746045511)

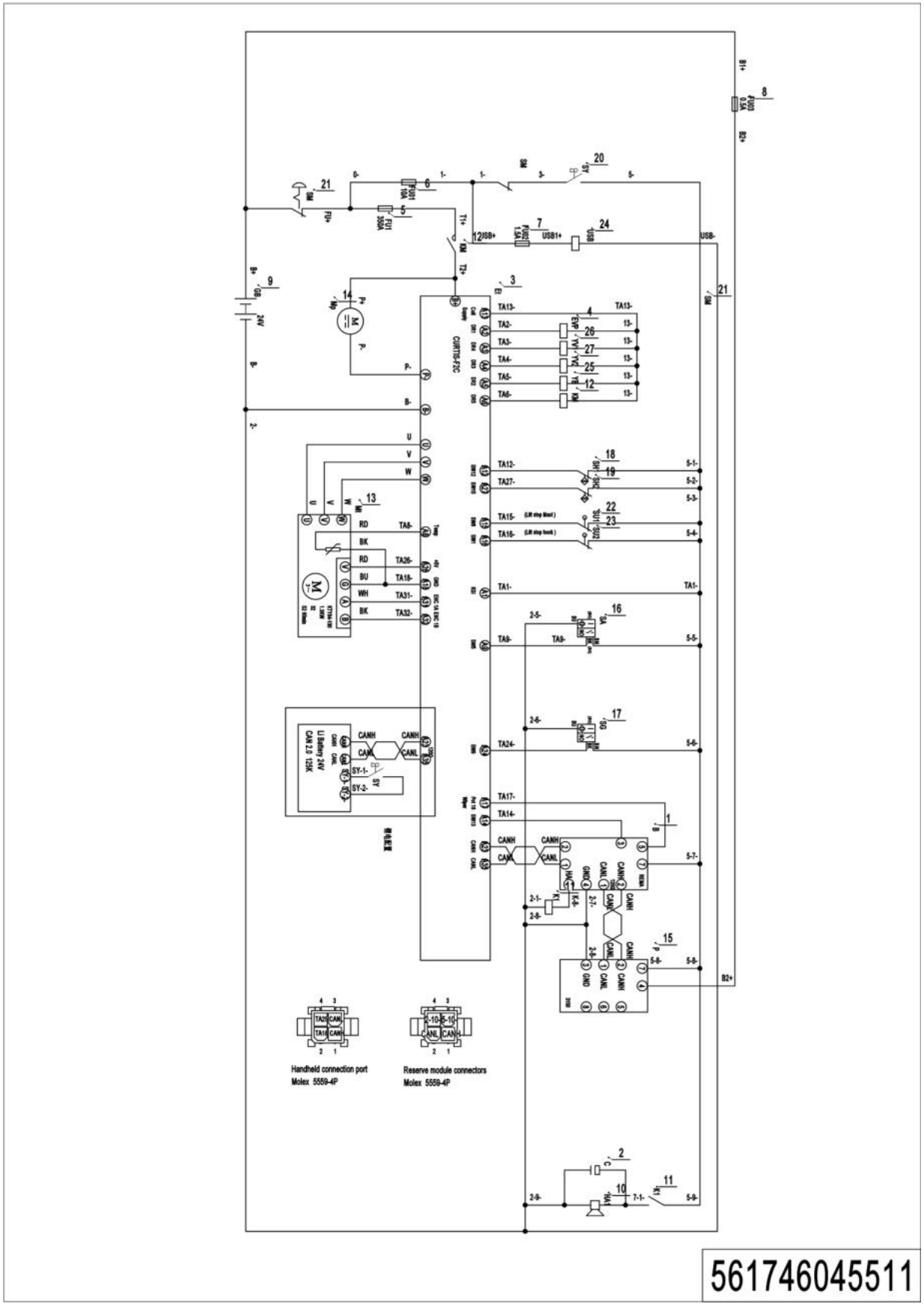

02 Hydraulic Circuit Diagram (561746045502)

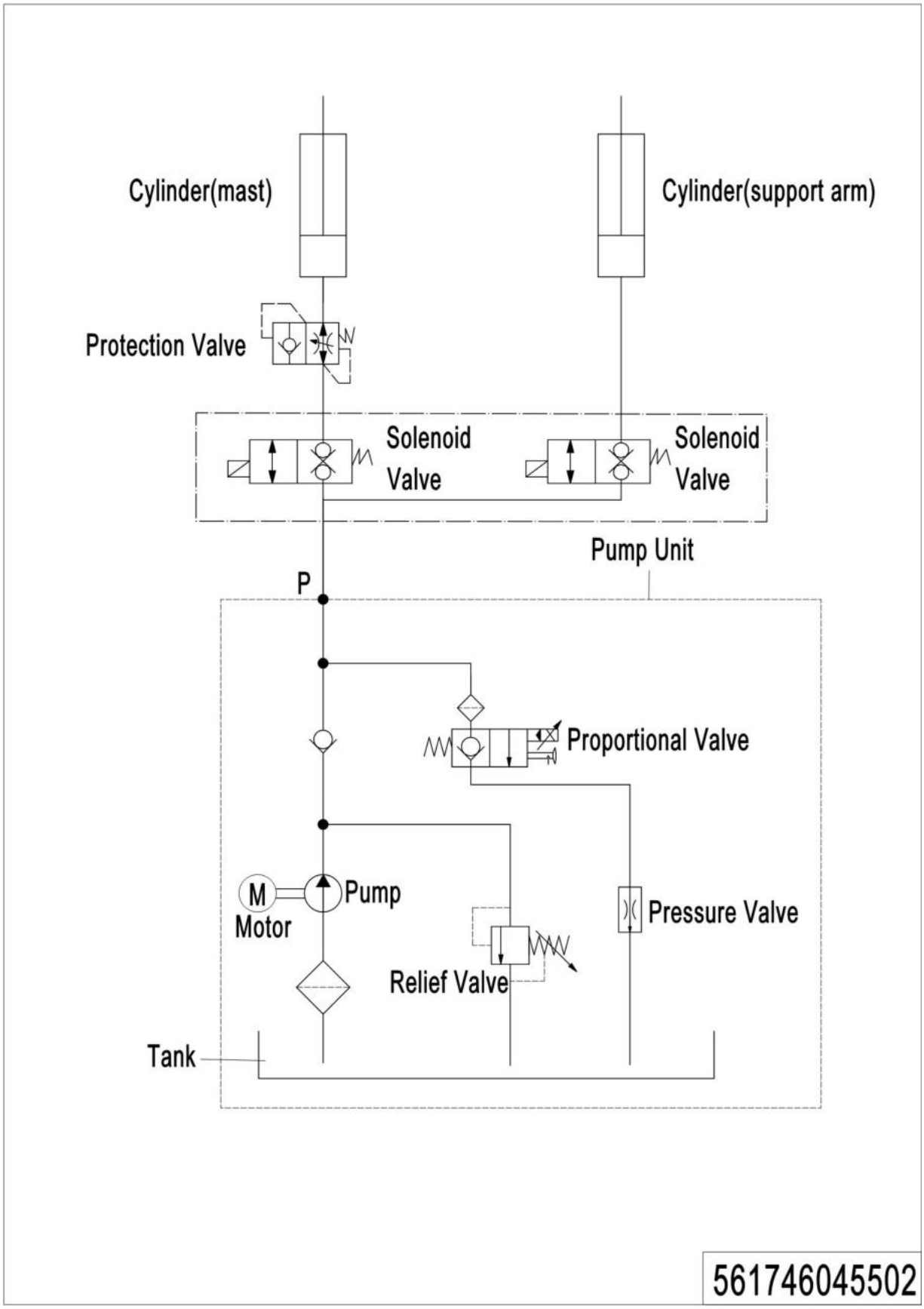

03 Consumable Parts List

No.	Item Code	Item Description	Qty.	Chapter/ Section/ Number
1	910700400004	Bearing	2	Chapter 5/04/4.03
2	910700200019	Bearing	10	Chapter 5/03/5.01 Chapter 5/04/4.08
3	940300300020	WheelΦ150x54	1	Chapter 5/04/4.07
4	940200300004	Compound Roller		Chapter 4/03/45 Chapter 4/04/59
5	534798510005	Seal Kit	2	Chapter 4/01/7.01
6	534798510002	Seal Kit	2	Chapter 4/02/12.01
7	534798510003	Seal Kit	1	Chapter 4/02/48.01
8	534798510004	Seal Kit	2	Chapter 4/03/17.01
9	534798510000	Seal Kit	2	Chapter 4/04/16.01
10	534798510001	Seal Kit	1	Chapter 4/04/58.01
11	940300300009	WheelΦ84x70	4	Chapter 5/03/5.02
12	505633510002	Proximity Switch	1	Chapter 5/01/13
13	940400100011	Air Spring	1	Chapter 5/01/9
14	920200300001	Microswitch	1	Chapter 4/01/17Chapter 4/04/07Chapter 4/04/39
15	535933510013	Switch	1	Chapter4/01/24Chapter4/03/27Chapter4/03/20 Chapter 4/04/38
16	561733510002	Switch	1	Chapter4/01/24Chapter4/03/27Chapter4/03/31 Chapter 4/04/38
17	561733010015	Switch	1	Chapter 4/01/24Chapter 4/03/27Chapter 4/04/38
18	561733010016	Switch	1	Chapter4/01/24Chapter4/03/27Chapter4/03/31 Chapter 4/03/31
19	535933510021	Switch	1	Chapter4/01/26Chapter4/03/31Chapter4/03/33 Chapter 4/04/44
20	535933510005	Switch	1	Chapter4/01/26Chapter4/03/31Chapter4/03/33 Chapter 4/04/44
21	920100100013	Fuse	1	Chapter 6/02/16 Chapter 6/03/7
22	920100200002	Fuse	2	Chapter 6/02/18 Chapter 6/03/14
23	562098510002	Wheel	2	Chapter 5/03/--