Print Number: Print Date:

NOBLELIFT

Scan QR Code for More

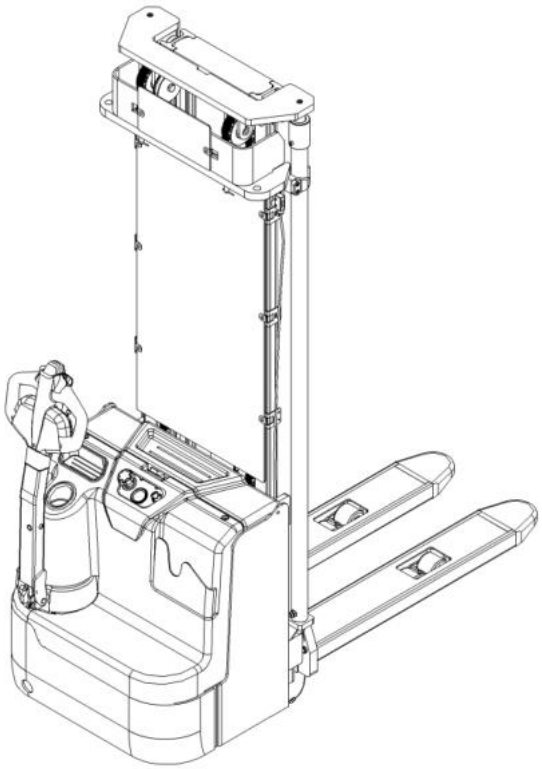

Electric Pallet Stacker PS12DL

PARTS MANUAL

561746010101

Version V02

Truck Identification Number From:

Parts Manual

PS12DL-PM02EN

Please order parts from authorized dealers of Noblelift Intelligent Equipment Co., LTD.

In order to avoid wrong delivery, all the orders for spare parts should specify the following items:

- Truck model, identification number and manufacture year.
- Orders for spare parts of mast, hydraulic transmission unit, steering axle, motor, etc. shall indicate the manufacture number of these parts.
- Codes for Noblelift spare parts are shown in the table of parts manual. Please also pay attention to the description of supply status, order quantity, etc. (check the number listed in "Mark" column of the parts manual).

"Mark" Column:

The unmarked indicates the parts are in short supply cycle.

Number 1: supply as package. Indicating these that parts are small parts and seal parts, which are supplied in package unit and in short supply cycle.

Number 2: supply with constraints. Indicating that these spare parts are not in stock and will be prepared for production after receiving the order from customers, which are in long supply cycle.

Number 3: phasing-out supply. Indicating that these parts will be replaced by new parts due to technical improvements and the current stock will not be available when these parts run out. Please check the description of technical improvements notice.

Number 4: supply as assembly. Indicating that these parts are assembly parts defined by manufacture process, which cannot be supplied as a single part.

Number 5: check other tables.

This parts manual is the property of Noblelift and can be shared under the confidential agreement only, Noblelift has the right to claim for compensation of any unauthorized use. Copy without permission is not allowed. Figures in the manual are not limited by the original design. Noblelift Intelligent Equipment Co., LTD reserves the right to improve the products for continuous technology progress.

Table of Contents

Chapter 1: Drive System 1
01 Drive Unit (535046013501) 1
02 Drive Unit 1.7kW (535046013502) 3
Chapter 2: Hydraulic System 5
01 Hydraulic Pipeline (Two-stage mast) (561745024001) 5
02 Hydraulic Pipeline (Triple mast full free lift) (561745024002) 7
02 Hydraulic Pipeline (Triple mast full free lift) (561745024002) Continuation 9
03 Hydraulic Unit 24V1.5KW2.0cc (534446023501) 11
04 Hydraulic Unit 24V3.2KW4.0cc (534746023501) 13
Chapter 3: Truck Frame 15
01 Truck body (561746021501) 15
02 Chassis assembly (561746038501) 17
03 Fork Carriage (561746038001) 19
04 Pull rod assembly (561746038501) 21
Chapter 4: Mast System 23
01 Two-stage mast standard lift (535646044001) 23
01 Two-stage mast standard lift (535646044001) Continuation 1 25
02 Two-stage mast full free lift (535646043501) 27
02 Two-stage mast full free lift (535646043501) Continuation 1 29
02 Two-stage mast full free lift (535646043501) Continuation 2 31
03 Triple Mast Full Free Lift (535646044501) 33
03 Triple Mast Full Free Lift (535646044501) Continuation 1 35
03 Triple Mast Full Free Lift (535646044501) Continuation 2 37
Chapter 5: Steering System, Braking System, Wheels 39
01 Handle assembly (504446011001) 39
02 Control Handle (505646011004) 41
02 Control Handle (505646011004) Continuation 43
03 Load Wheel (561746017001) 45

04 Caster (534746016501) 47

Chapter 6: Electrical Parts 49

01 Display Assembly (534746010001) 49

02 Electronic Components (561746033001) 51

03 Charger (534446036501) 57

04 Traction Battery (534446037001) 61

Chapter 7: Special Parts 65

01 Load Backrest (532646040501) 65

Chapter 8: Others 67

01 Label and Decal (EU) (561746047001) 67

02 Label and Decal (US) (561746047002) 69

Appendix 71

01 Electrical Circuit Diagram (561746045501) 71

02 Hydraulic Circuit Diagram (561746045502) 73

03 Consumable Parts List 74

Chapter 1: Drive System

01 Drive Unit (535046013501)

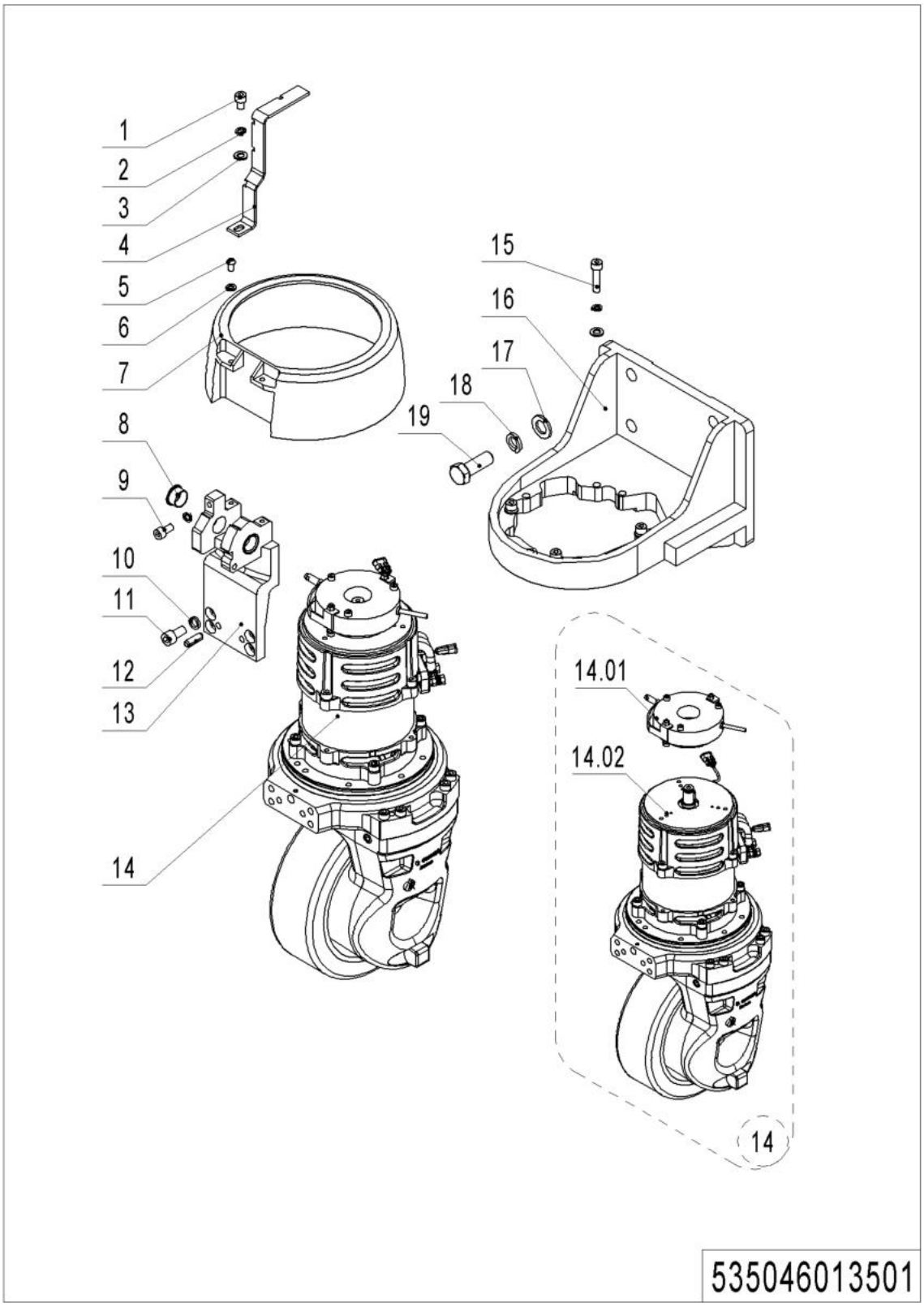

01 Drive Unit (535046013501)

No.	Item Code	Mark	Item Description	Qty.	Substitute	Note
1	910200200053	1	Screw	1		
2	910400500006	1	Spring Washer	5		
3	910400100006	1	Flat Washer	5		
4	534713520002		Fixing Mount	1		
5	910200300017	1	Screw	2		
6	910400100005	1	Flat Washer	2		
7	534713520003		Protective Cover	1		
8	940500200005		Bushing	2		
9	910200200055	1	Screw	1		
10	910400500007	1	Spring Washer	4		
11	910200200075	1	Screw	4		
12	910600400044	1	Spring Pin	2		
13	534713520001		Bracket	1		
14	535098510006		Drive Unit	1		
14.01	940700100001		Brake	1		
14.02	940900400003	5	Drive Unit	1		**See 535046013001**
15	910200200060	1	Screw	4		
16	534713520000		Wheel Mount	1		
17	910400100010	1	Flat Washer	4		
18	910400500010	1	Spring Washer	4		
19	910100300071	1	Bolt	4		

1= Supply as package. 2= Supply with constraints. 3= Phasing-out supply. 4= Supply as assembly. 5= Check other tables.

02 Drive Unit 1.7kW (535046013502)

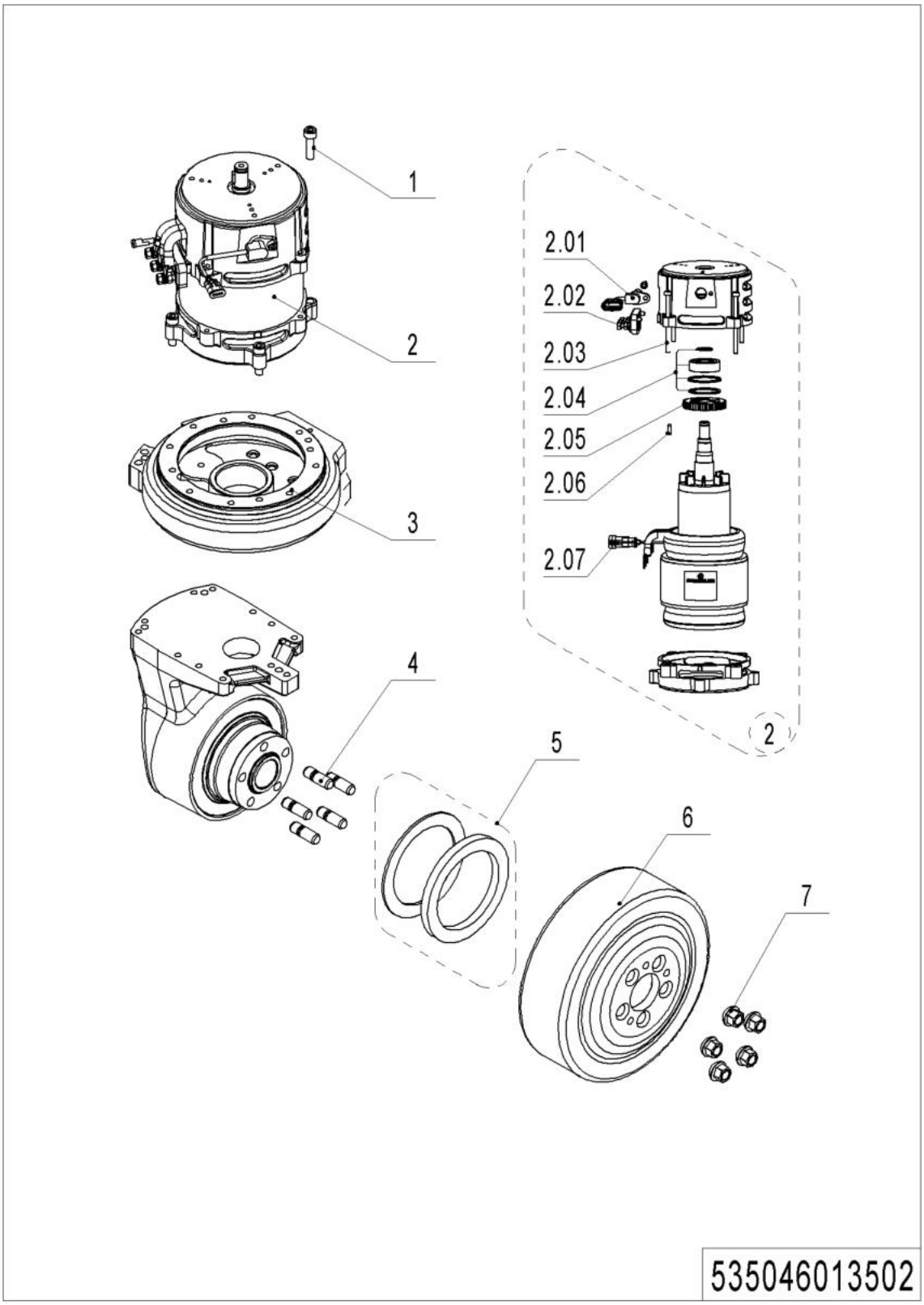

1= Supply as package. 2= Supply with constraints. 3= Phasing-out supply. 4= Supply as assembly. 5= Check other tables.

02 Drive Unit 1.7kW (535046013502)

No.	Item Code	Mark	Item Description	Qty.	Substitute	Note
1	504498520016	1	Screw	4		
2	535098510004	2	Motor	1		
2.01	535098520041		Sensor	1		
2.02	535098520042		Wiring Board	1		
2.03	535098520043		Screw	4		
2.04	535098510005		Motor Kit	1		
2.05	535098520044		Sensor	1		
2.06	504498520011		Feather Key	1		
2.07	535098520045		Sensor	1		
3	504498510002	2	Rotary Table Kit	1		
4	504498520005	2	Bolt	5		
5	504498510003	2	Seal Kit	1		
6	940300400005		WheelΦ230x70	1		
7	504498520003	1	Nut	5		

Chapter 2: Hydraulic System

01 Hydraulic Pipeline (Two-stage mast) (561745024001)

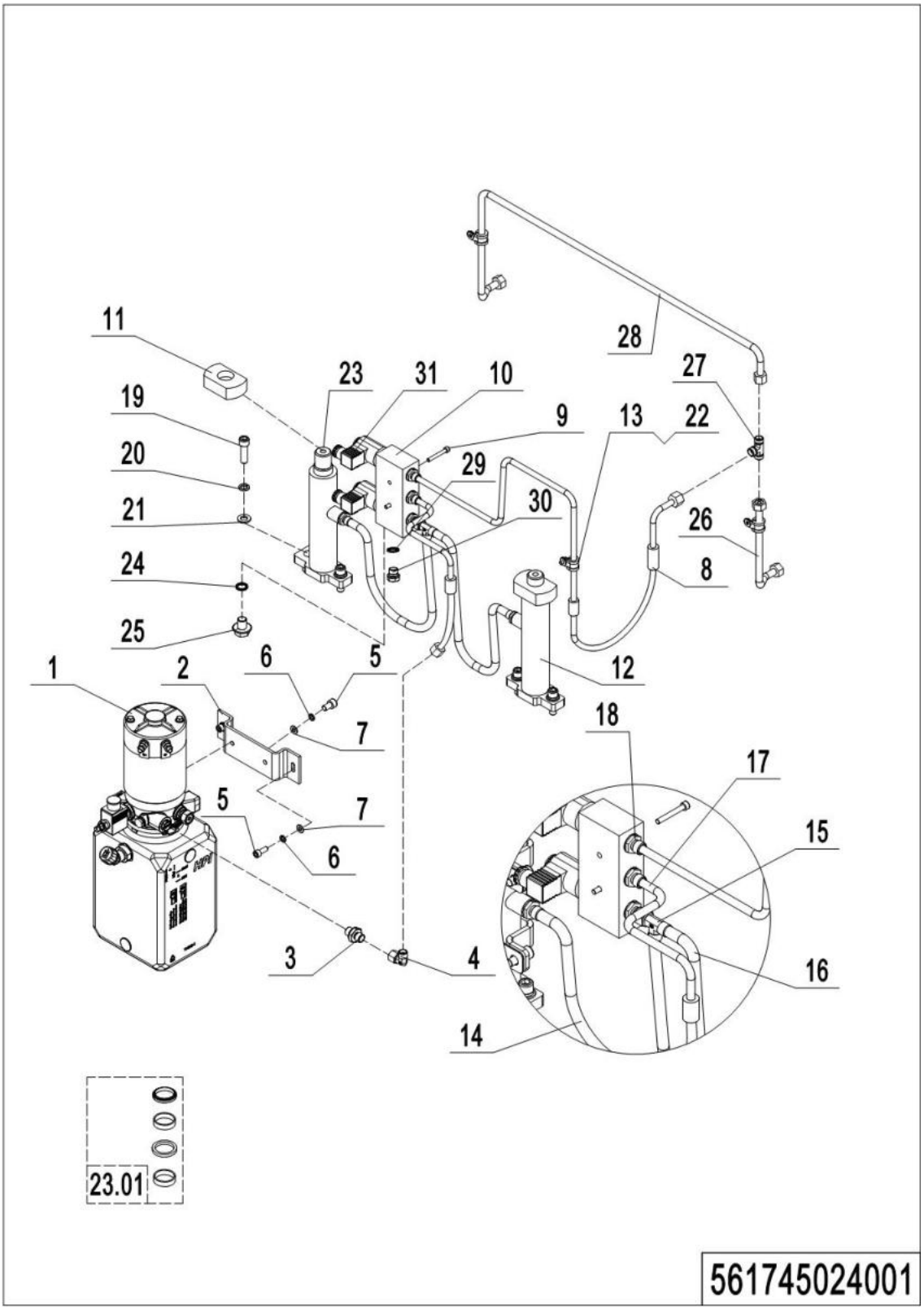

01 Hydraulic Pipeline (Two-stage mast) (561745024001)

No.	Item Code	Mark	Item Description	Qty.	Substitute	Note
1	950900100014		Pump Unit	1		
2	534424020000		Mounting Plate	1		
3	950400300005		Joint	1		
4	950400200003		Joint	1		
5	910200200057		Screw	4		
6	910400500006		Spring Washer	4		
7	910400100006		Flat Washer	4		
8	562024520002		Hose	1		
9	910200200042		Screw	2		
10	560824520003		Valve Block	1		
11	562024520008		Subplate	2		
12	562024510001		Cylinder	2		
13	910200200032		Screw	4		
14	562024520004		Hose	1		
15	950401000003		Joint	1		
16	562024520005		Hose	1		
17	561724520001		Hose	1		
18	950400400003		Joint	5		
19	910200200100		Screw	4		
20	910400500008		Spring Washer	4		
21	910400100008		Flat Washer	4		
22	951000100001		Hose Clamp	1		
23	562024510001		Cylinder	2		
23.01	562098510001		Seal Kit	2		
24	910800900005		Bonded Washer	1		
25	911300100001		Screw Plug	1		
26	534724010007		Steel Tube	1		
27	950400700002		Joint	2		
28	534724010008		Steel Tube	1		
29	910800900005		Bonded Washer	1		
30	911300100001		Screw Plug	1		
31	950700200003		Valve	2		

1= Supply as package. 2= Supply with constraints. 3= Phasing-out supply. 4= Supply as assembly. 5= Check other tables.

02 Hydraulic Pipeline (Triple mast full free lift) (561745024002)

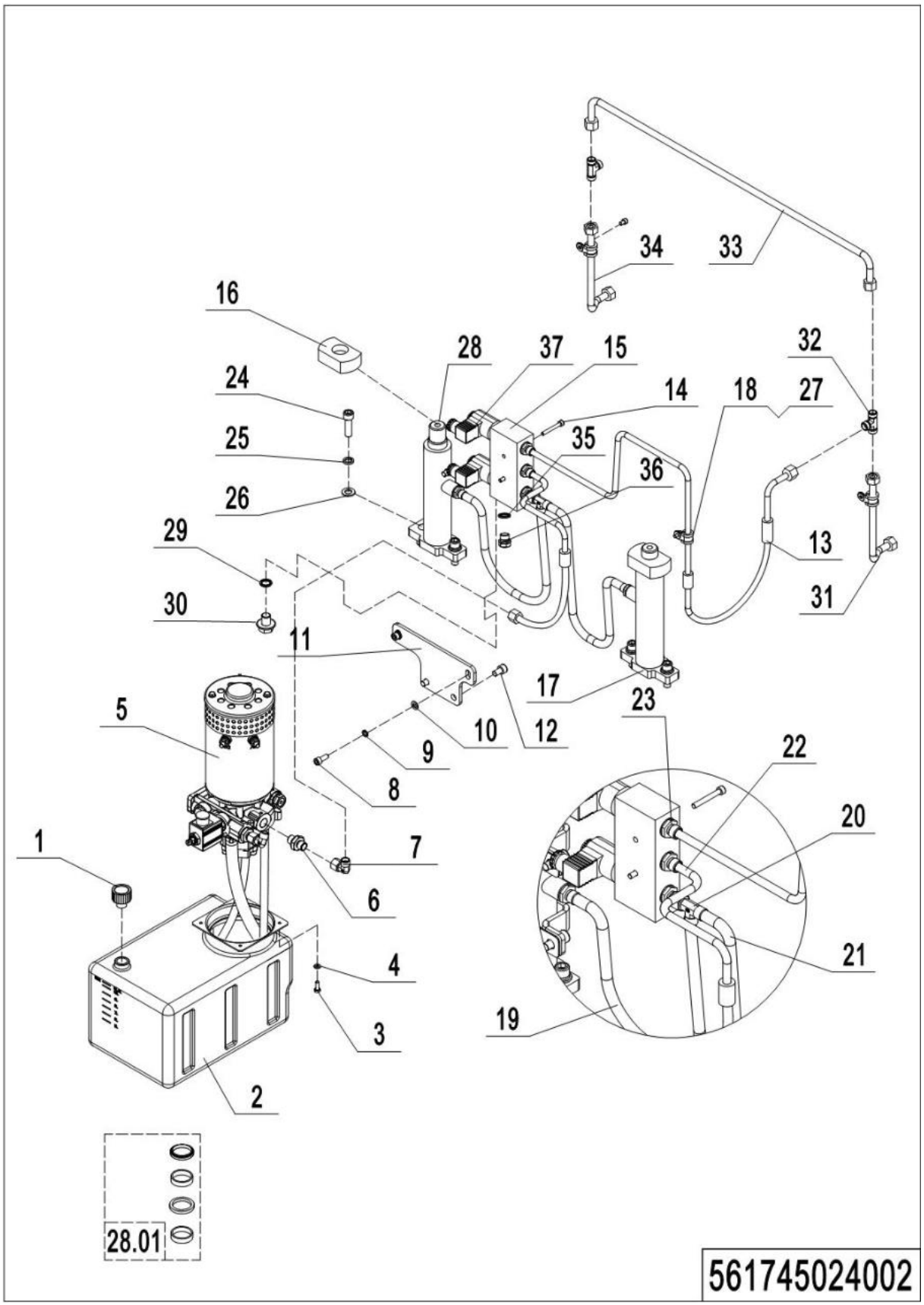

02 Hydraulic Pipeline (Triple mast full free lift) (561745024002)

No.	Item Code	Mark	Item Description	Qty.	Substitute	Note
1	951100200004		Screw Plug	1		
2	534719010001		Tank Kit	1		
3	910100300010		Bolt	4		
4	910400100005		Flat Washer	4		
5	950900100015		Pump Unit	1		See 534746023501
6	950400300005		Joint	1		
7	950400200003		Joint	1		
8	910200200057		Screw	2		
9	910400500006		Spring Washer	2		
10	910400100006		Flat Washer	2		
11	534719020001		Mounting Plate	1		
12	910200200075		Screw	2		
13	562024520002		Hose	1		
14	910200200042		Screw	2		
15	560824520003		Valve Block	1		
16	562024520008		Subplate	2		
17	562024510001		Cylinder	2		
18	910200200032		Screw	6		
19	562024520004		Hose	1		
20	950401000003		Joint	1		
21	562024520005		Hose	1		
22	561724520001		Hose	1		
23	950400400003		Joint	5		
24	910200200100		Screw	4		
25	910400500008		Spring Washer	4		
26	910400100008		Flat Washer	4		
27	951000100001		Hose Clamp	3		
28	562024510001		Cylinder	2		
28.01	562098510001		Seal Kit	2		

1= Supply as package. 2= Supply with constraints. 3= Phasing-out supply. 4= Supply as assembly. 5= Check other tables.

02 Hydraulic Pipeline (Triple mast full free lift) (561745024002) Continuation

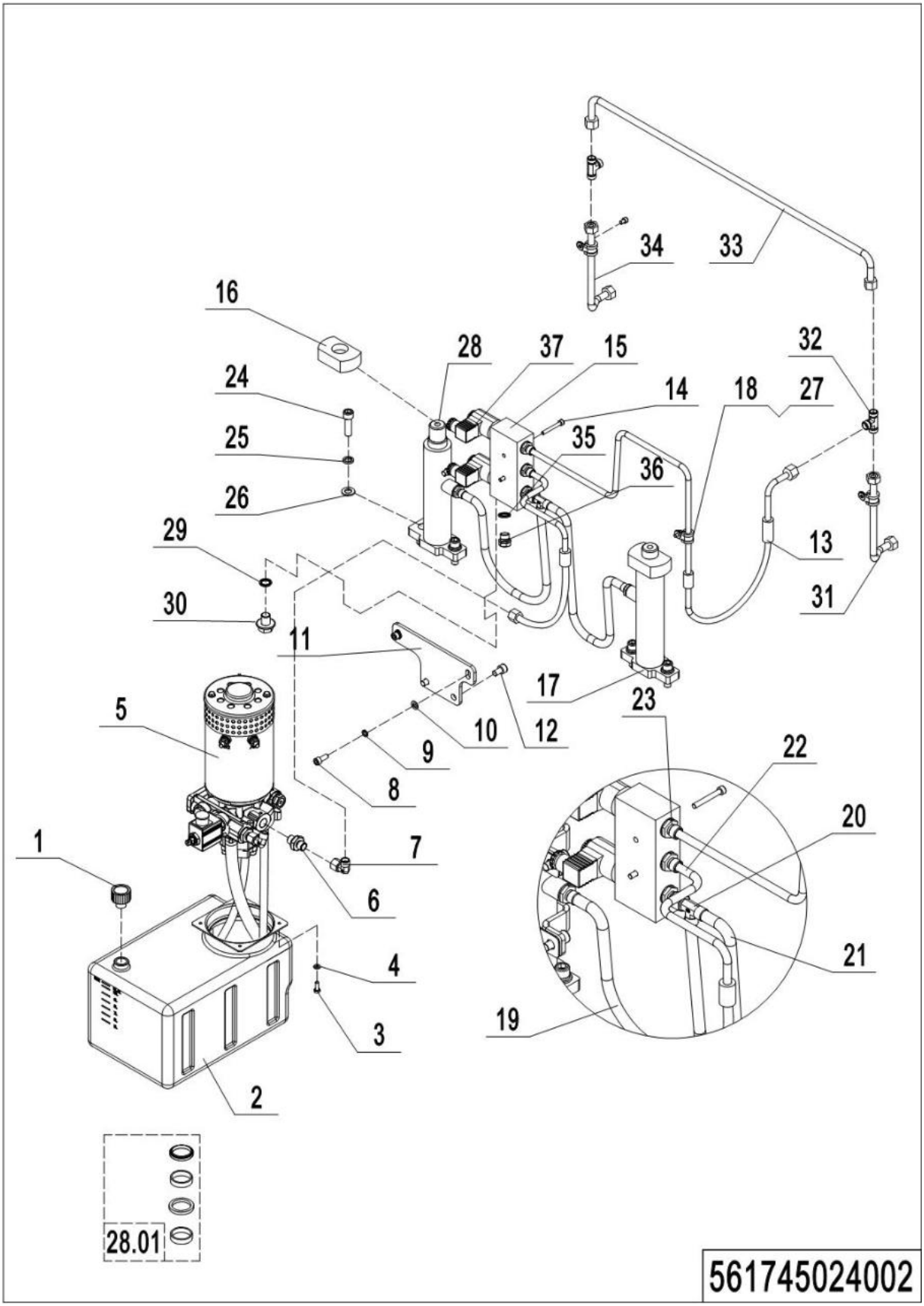

02 Hydraulic Pipeline (Triple mast full free lift) (561745024002) Continuation

No.	Item Code	Mark	Item Description	Qty.	Substitute	Note
29	910800900005		Bonded Washer	1		
30	911300100001		Screw Plug	1		
31	534724010006		Steel Tube	1		
32	950400700002		Joint	2		
33	534724010000		Steel Tube	1		
34	534724010005		Steel Tube	1		
35	910800900005		Bonded Washer	1		
36	911300100001		Screw Plug	1		
37	950700200003		Valve	2		

03 Hydraulic Unit 24V1.5KW2.0cc (534446023501)

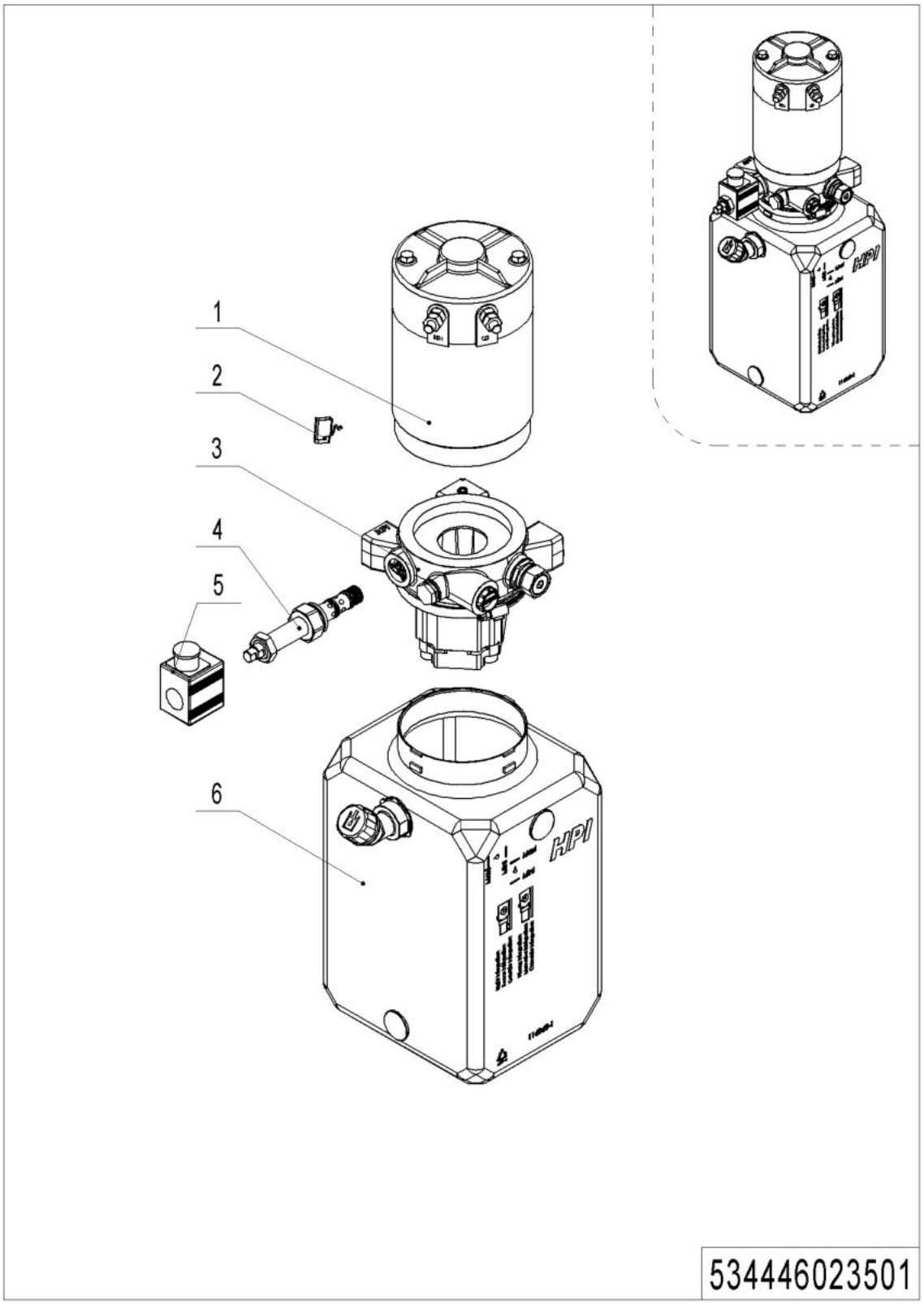

1= Supply as package. 2= Supply with constraints. 3= Phasing-out supply. 4= Supply as assembly. 5= Check other tables.

03 Hydraulic Unit 24V1.5KW2.0cc (534446023501)

No.	Item Code	Mark	Item Description	Qty.	Substitute	Note
--	950900100014		Pump Unit	1		
1	534498510003	2	Motor	1		
2	534498510008	2	Carbon Brush	1		
3	534498510004	2	Valve Block	1		
4	534498510005	2	Magnetic Valve	1		**Provide with coil**
5	534498510006	2	Coil	1		**Provide with valve**
6	534498510007	2	Tank	1		

04 Hydraulic Unit 24V3.2KW4.0cc (534746023501)

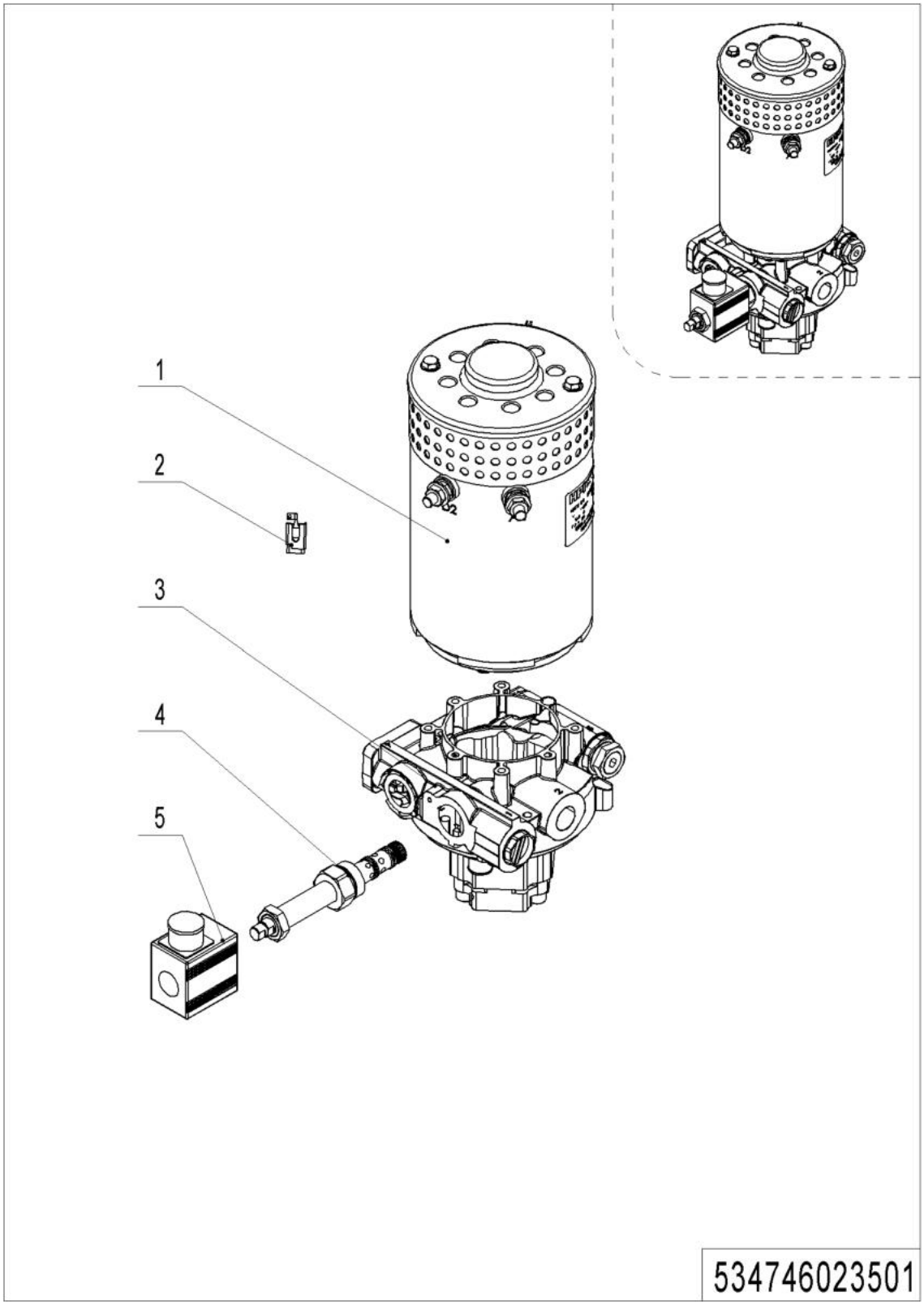

1= Supply as package. 2= Supply with constraints. 3= Phasing-out supply. 4= Supply as assembly. 5= Check other tables.

04 Hydraulic Unit 24V3.2KW4.0cc (534746023501)

No.	Item Code	Mark	Item Description	Qty.	Substitute	Note
--	950900100015		Pump Unit	1		
1	534798510006	2	Motor	1		
2	534798520026	2	Carbon Brush	1		
3	534798510007	2	Valve Block	1		
4	534798520024	2	Magnetic Valve	1		**Provide with coil**
5	534798520025	2	Coil	1		**Provide with valve**

Chapter 3: Truck Frame

01 Truck body (561746021501)

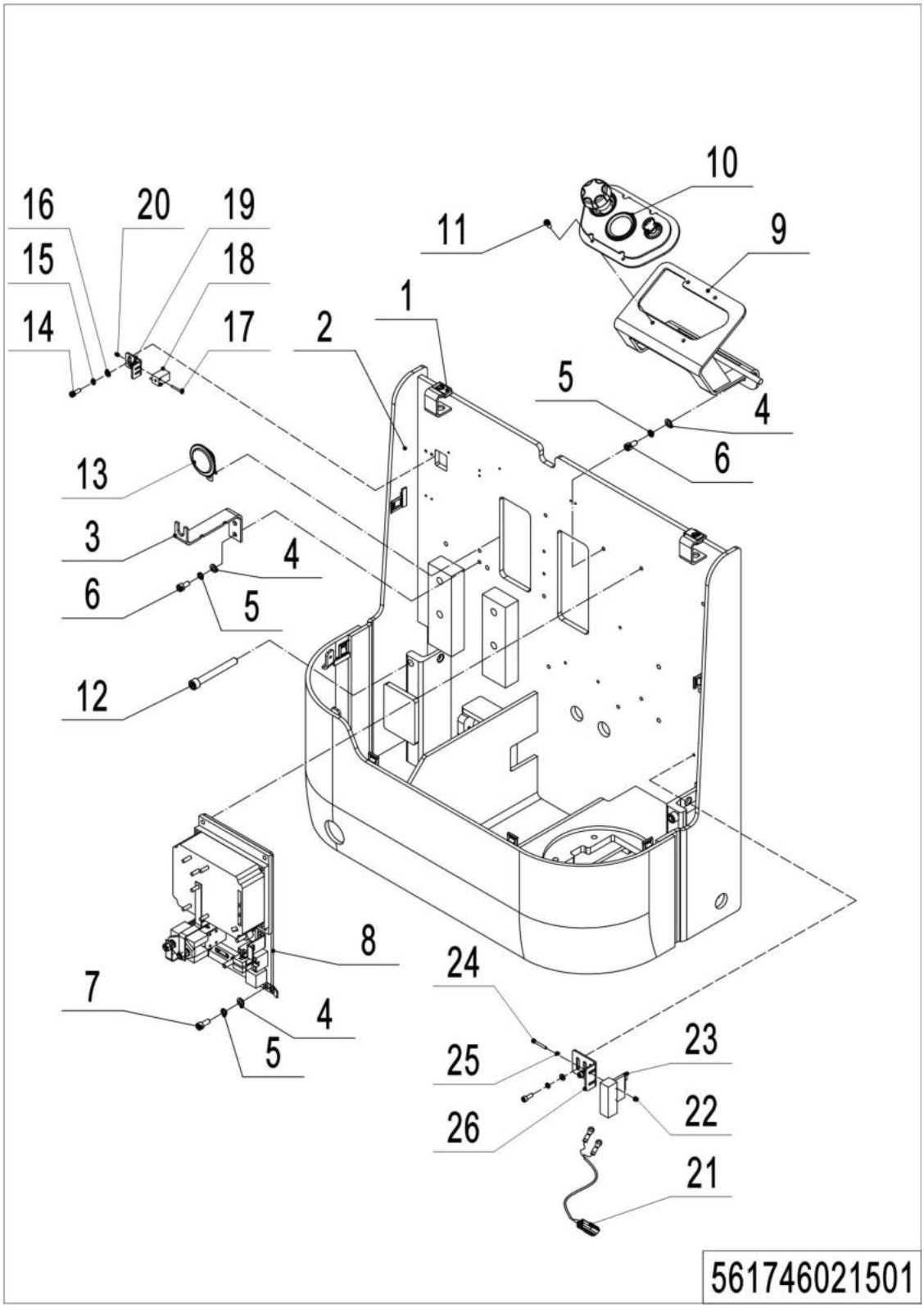

01 Truck body (561746021501)

No.	Item Code	Mark	Item Description	Qty.	Substitute	Note
1	940400400003		Cage Nut	2		
2	562021510001		Chassis(570x1150)	1		
	562021510002		Chassis(685x1150)	1		
3	534721520025		Fixing Mount	1		
4	910400100006		Flat Washer	8		
5	910400500006		Spring Washer	8		
6	910200200055		Screw	4		
7	910200200058		Screw	4		
8	534721520027		Mounting Plate	1		
9	534710010000		Mounting Plate	1		
10	534710001001		Indicator Kit	1		
11	910200200036		Screw	4		
12	910200200090		Screw	2		
13	920500100001		Horn	1		
14	910200200035		Screw	4		
15	910400500005		Spring Washer	4		
16	910400100005		Flat Washer	4		
17	910200500015		Screw	2		
18	561733510000		Proximity Switch	1		
19	562021520013		Mounting Plate	1		
20	910300500011		Nut	2		
21	561733010001		Wire Harness	1		
21	561733010013		Wire Harness	1		EN1175:2020
22	910300500001		Nut	2		
23	920200300003		Micro switch	1	1	23
24	910200400006		Screw	4		
25	910400100003		Flat Washer	2		
26	562021520014		Mounting Plate	1		

02 Chassis assembly (561746038501)

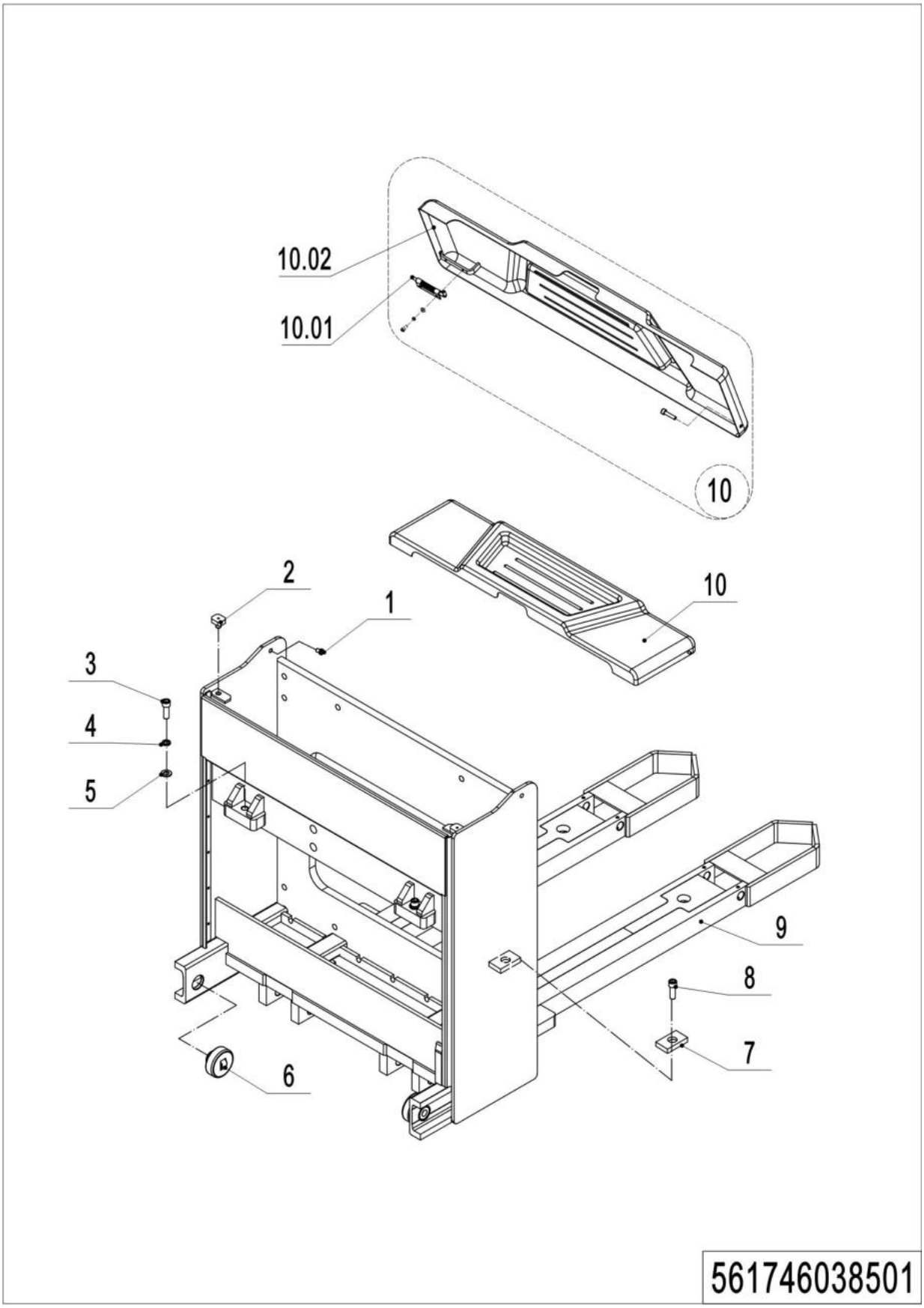

1= Supply as package. 2= Supply with constraints. 3= Phasing-out supply. 4= Supply as assembly. 5= Check other tables.

02 Chassis assembly (561746038501)

No.	Item Code	Mark	Item Description	Qty.	Substitute	Note
1	534721520023		Sleeve	2		
2	505938520016		Crash Pad	2		
3	910200200099		Screw	2		
4	910400500008		Spring Washer	2		
5	910400100008		Flat Washer	2		
6	940200300001		Compound Roller	2		
7	534721520024		Crash Pad	2		
8	910200200035		Screw	2		
9	561738510001		Fork Carriage(570x1150)	1		570x1150
	561738510003		Fork Carriage(685x1150)	1		685x1150
10	561798510001		Cell Cover	1		
10.01	940800900001		Lock Pin	1		
10.02	561721010002		Cell Cover	1		

03 Fork Carriage (561746038001)

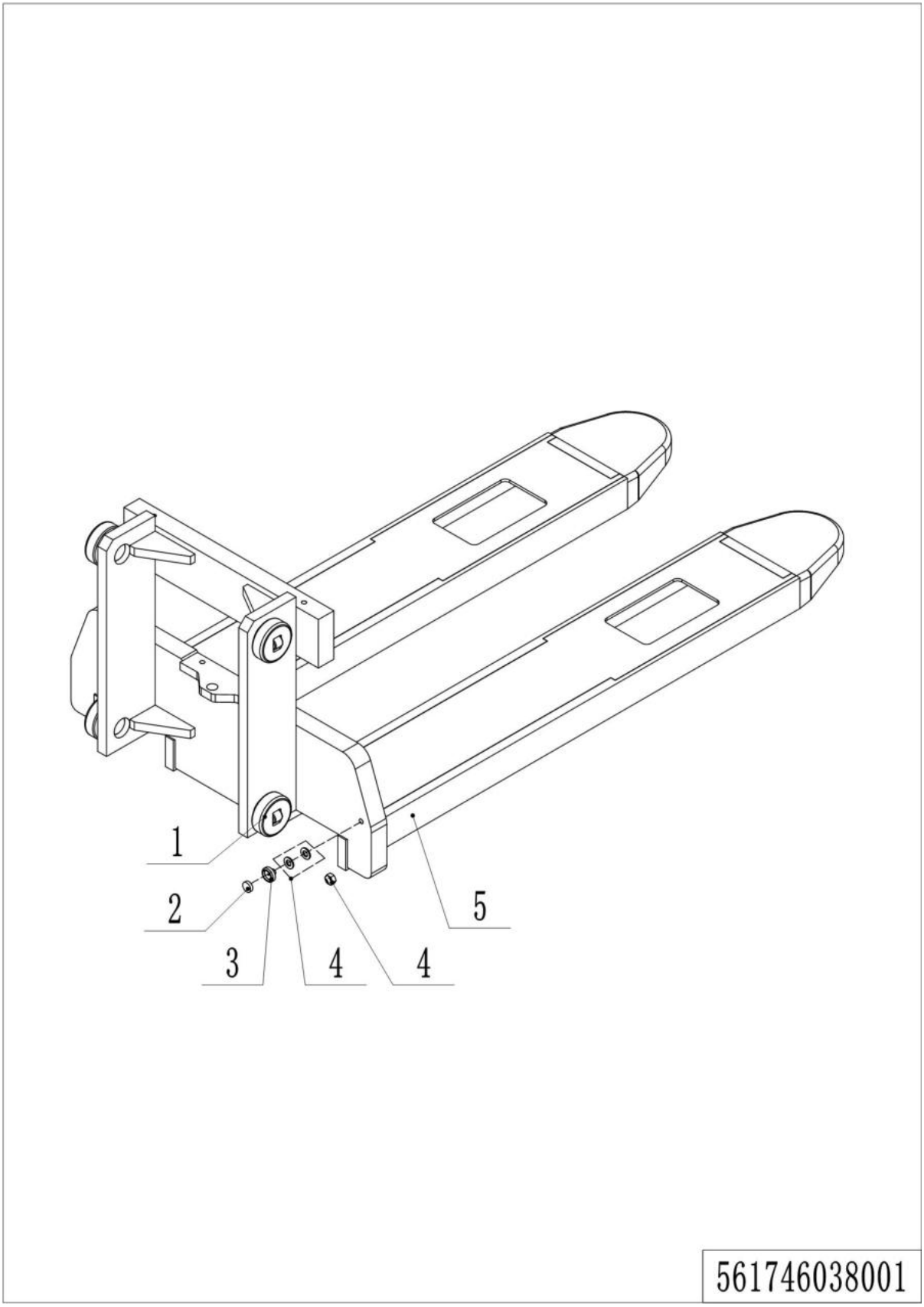

1= Supply as package. 2= Supply with constraints. 3= Phasing-out supply. 4= Supply as assembly. 5= Check other tables.

03 Fork Carriage (561746038001)

No.	Item Code	Mark	Item Description	Qty.	Substitute	Note
1	940200300002		Compound Roller	4		
2	940600100001		Magnetic Steel	1		
3	940600200001		Mounting Base	1		
4	910400100007	1	Flat Washer	2		
	910300100007	1	Nut	1		
5	561738010001	2	Fork(570x1150)	1		DX, Two-stage mast
	561738010002	2	Fork(685x1150)	1		DX, Two-stage mast
	561738010003	2	Fork(570x1150)	1		DX+FFL, Two-stage
	561738010004	2	Fork(685x1150)	1		DX+FFL, Two-stage
	561738010005	2	Fork(570x1150)	1		TX+FFL
	561738010006	2	Fork(685x1150)	1		TX+FFL

04 Pull rod assembly (561746038502)

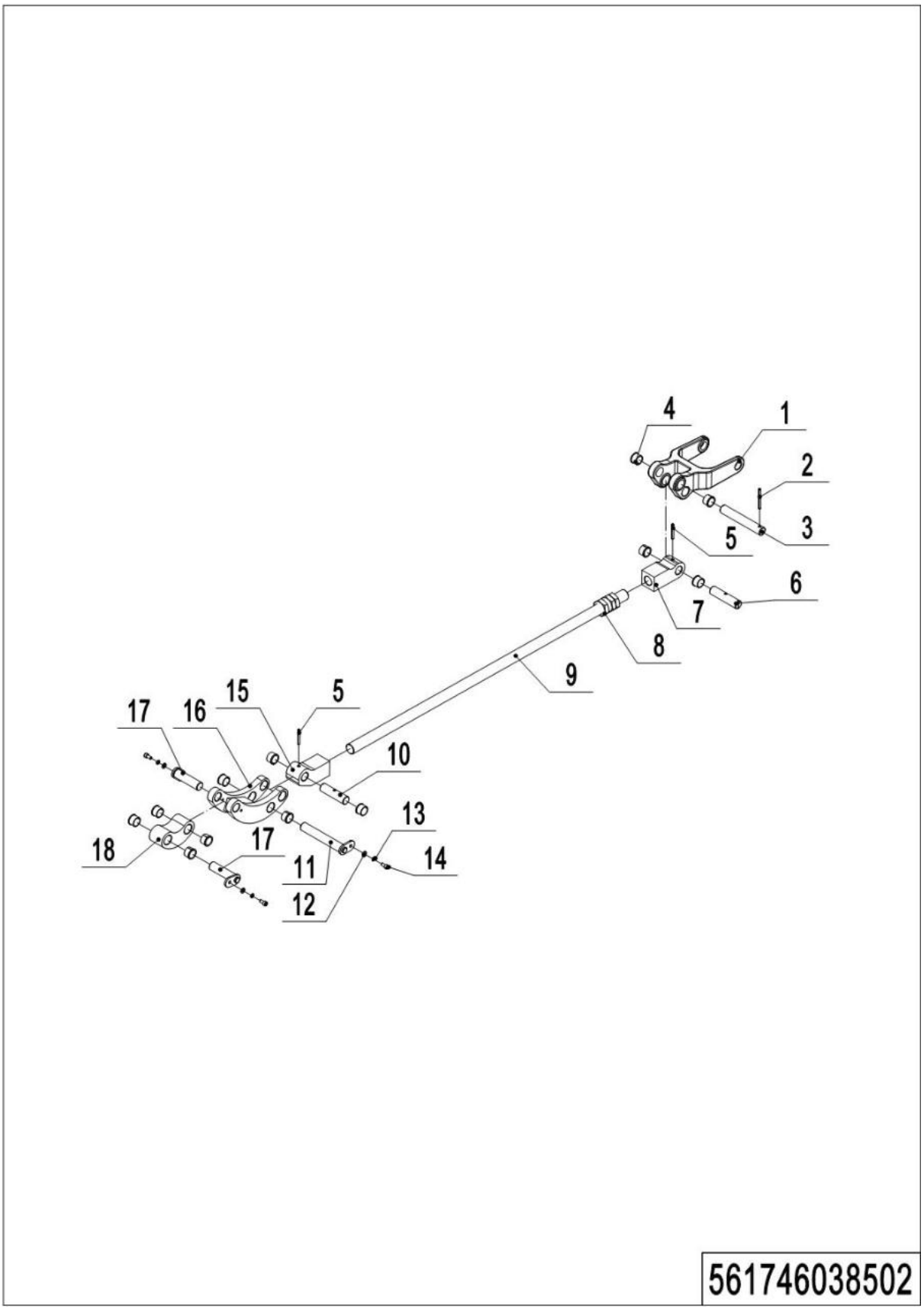

1= Supply as package. 2= Supply with constraints. 3= Phasing-out supply. 4= Supply as assembly. 5= Check other tables.

04 Pull rod assembly (561746038502)

No.	Item Code	Mark	Item Description	Qty.	Substitute	Note
1	562038520023		Riser	2		
2	910600400031		Spring Pin	2		
3	562038520025		Pin	2		
4	940500200007		Bushing	24		
5	910600400028		Spring Pin	4		
6	562038520024		Axle	2		
7	562038520026		Sleeve	2		
8	910300400010		Nut	4		
9	561738510002		Rod	2		
10	562038520028		Axle	2		
11	562038510003		Pin	2		
12	910400100005		Flat Washer	6		
13	910400500005		Spring Washer	6		
14	910200200035		Screw	6		
15	562038520027		Sleeve	2		
16	562038510004		Plate	2		
17	562038510005		Pin	4		
18	562038520029		Oscillating Bar	2		

Chapter 4: Mast System

01 Two-stage mast standard lift (535646044001)

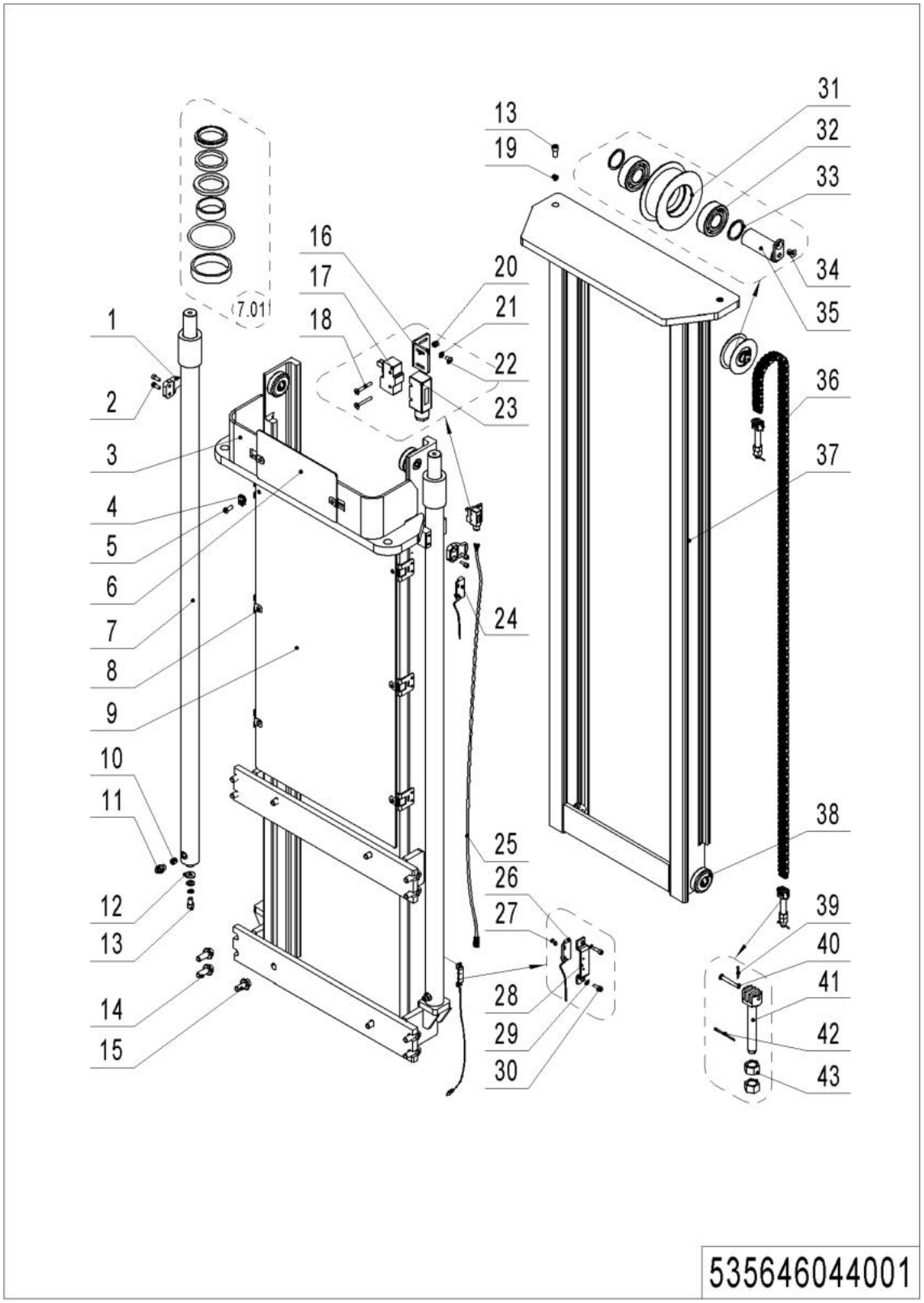

01 Two-stage mast standard lift (535646044001)

No.	Item Code	Mark	Item Description	Qty.	Substitute	Note
1	275044020076		Fixing Plate	2		
2	910200200057	1	Screw	4		
3	534444010013	2	Outer Mast(2900)	1		
3	534444010011	2	Outer Mast(3200)	1		
3	534444010009	2	Outer Mast(3600)	1		
4	940400400003		Cage Nut	2		
5	941100100005	1	Screw	2		
6	534744520037		Guard Plate	1		
7	534444010008		Cylinder	2		**2900**
7	534444010007		Cylinder	2		**3200**
7	534444010006		Cylinder	2		**3600**
7.01	534498510002		Seal Kit	1		
8	940400300001		Spring Buckle	4		
8	940400300001		Spring Buckle	6		
9	534744020011		Guard Plate	1		**2900**
9	534744520038		Guard Plate	1		**3200**
9	534744020006		Guard Plate	1		**3600**
10	950600300001		Safety Valve	2		
11	950400400003		Joint	3		
12	534744520015		Subplate	2		
13	910200200097	1	Screw	4		
14	910100800006	1	Bolt	8		
15	910100800005	1	Bolt	4		
16	534744520036		Fixing Plate	1		
17	920200300001		Microswitch	1		
18	910200400007	1	Screw	2		
19	910400500008	1	Spring Washer	2		
20	910300500001	1	Nut	2		
21	910400100003	1	Flat Washer	2		
22	910200300005	1	Screw	2		

1= Supply as package. 2= Supply with constraints. 3= Phasing-out supply. 4= Supply as assembly. 5= Check other tables.

01 Two-stage mast standard lift (535646044001) Continuation 1

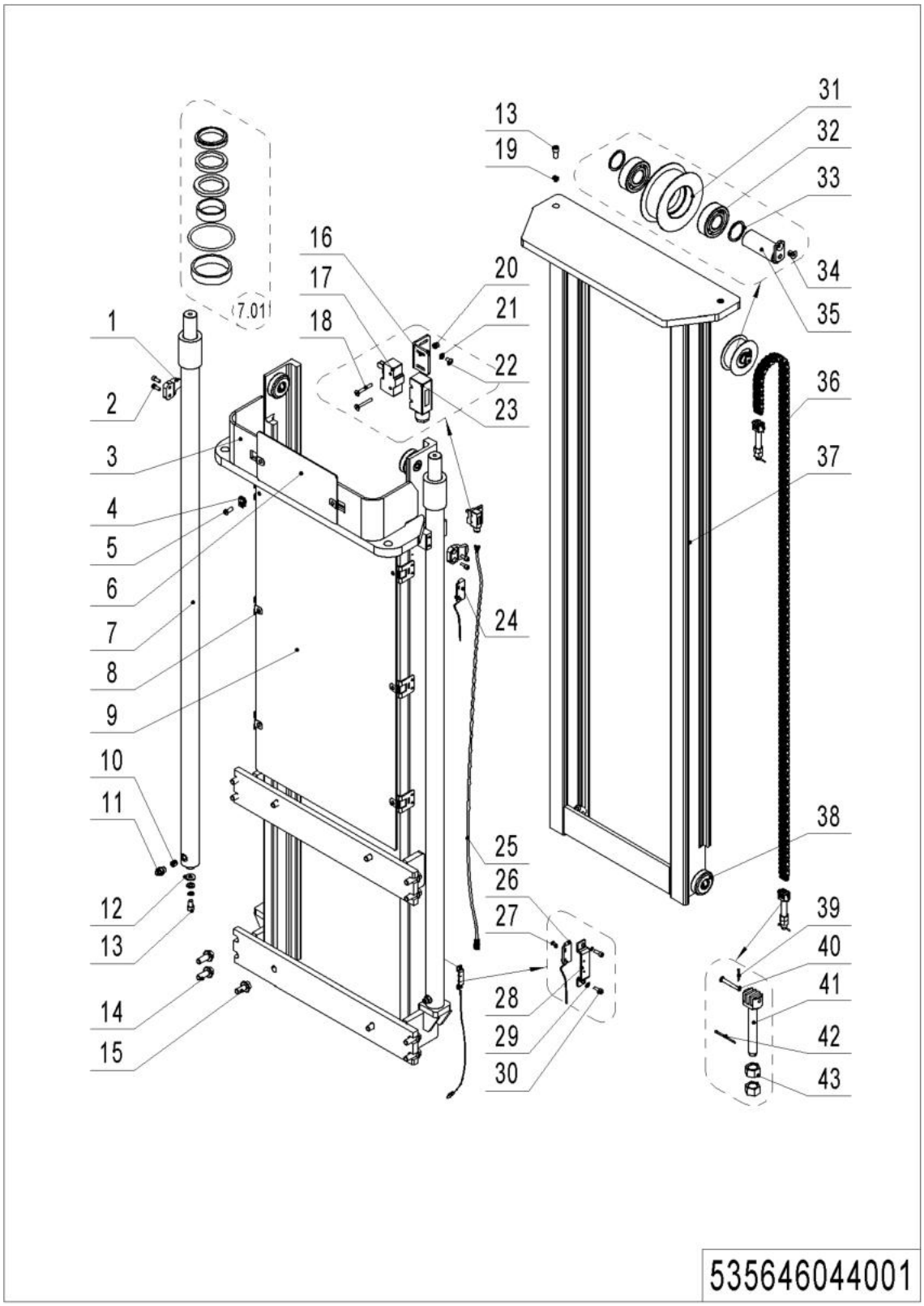

01 Two-stage mast standard lift (535646044001) Continuation 1

No.	Item Code	Mark	Item Description	Qty.	Substitute	Note
23	920200300008		Protective Cover	1		
24	535933510012		Switch	1		**2900**
24	535933510013		Switch	1		**3200**
24	535933510015		Switch	1		**3600**
24	535933510021		Switch	1		**EN1175-2020**
25	535933510025		Wire Harness	1		
26	535933510005		Switch	1		
26	535933510020		Switch	1		**EN1175-2020**
27	910200500010	1	Screw	4		
27	910200500021	1	Screw	4		**EN1175-2020**
28	534744520059		Protective Cover	2		
28	534744520080		Protective Cover	2		**EN1175-2020**
29	910400500003	1	Spring Washer	4		
30	910200300006	1	Screw	4		
31	940200400006		Sprocket	1		
32	910700200021		Bearing	2		
33	940600500008	1	Washer	2		
34	910200400016	1	Screw	1		
35	533544510006		Pin	1		
36	534444010024		Chain	1		**2900**
36	534444010026		Chain	1		**3200**
36	534444010025		Chain	1		**3600**
37	534444010014	2	Inner Mast(2900)	1		
37	534444010012	2	Inner Mast(3200)	1		
37	534444010010	2	Inner Mast(3600)	1		
38	940200300001		Compound Roller	4		
39	910600600006	1	Cotter Pin	2		
40	941100800005		Pin	2		
41	533244020020		Chain Anchor	2		
42	910600600023	1	Cotter Pin	2		
43	910300200008	1	Nut	4		

02 Two-stage mast full free lift (535646043501)

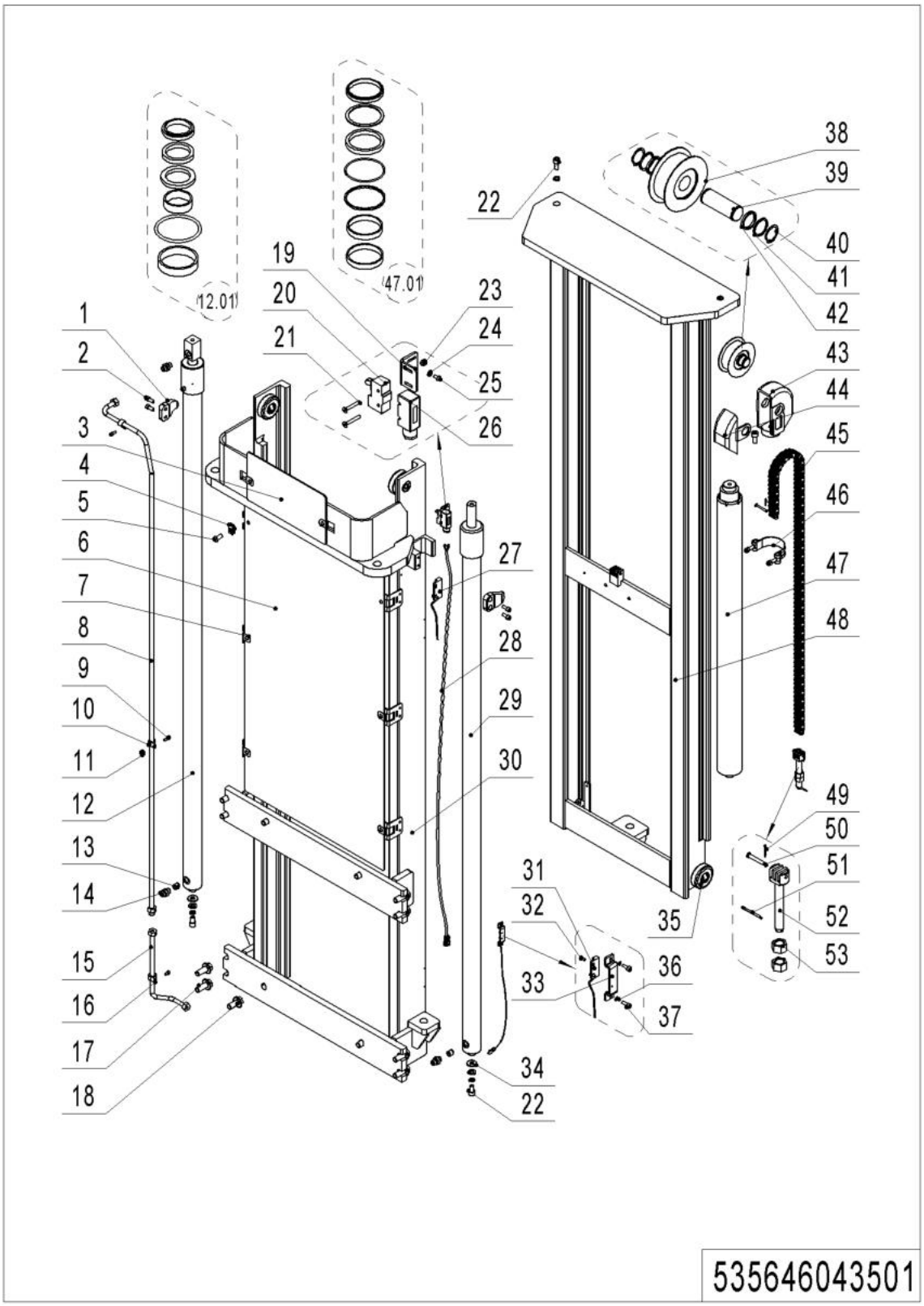

02 Two-stage mast full free lift (535646043501)

No.	Item Code	Mark	Item Description	Qty.	Substitute	Note
1	275044020076		Fixing Plate	2		
2	910200200057	1	Screw	4		
3	534744520037		Guard Plate	1		
4	940400400003		Cage Nut	2		
5	941100100005	1	Screw	2		
6	534744020011		Guard Plate	1		**2900**
6	534744520038		Guard Plate	1		**3200**
6	534744020006		Guard Plate	1		**3600**
7	940400300001		Spring Buckle	4		
7	940400300001		Spring Buckle	6		
8	534743510017		Steel Tube	1		**2900**
8	534743510016		Steel Tube	1		**3200**
8	534443520001		Steel Tube	1		**3600**
9	910200200035		Screw	3		
10	951000100001		Hose Clamp	2		
11	940600500001		Washer	2		
12	534444010017		Cylinder	1		**2900**
12	534444010016		Cylinder	1		**3200**
12	534444010015		Cylinder	1		**3600**
12.01	534498510000		Seal Kit	2		**Also for cylinder 29**
13	950600300001		Safety Valve	3		
14	950400400003		Joint	4		
15	534743510018		Steel Tube	1		
16	951000100003		Hose Clamp	1		
17	910100800006	1	Bolt	8		
18	910100800005	1	Bolt	4		
19	534744520036		Fixing Plate	1		
20	920200300001		Microswitch	1		
21	910200400007	1	Screw	2		
22	910200200097	1	Screw	5		

1= Supply as package. 2= Supply with constraints. 3= Phasing-out supply. 4= Supply as assembly. 5= Check other tables.

02 Two-stage mast full free lift (535646043501) Continuation 1

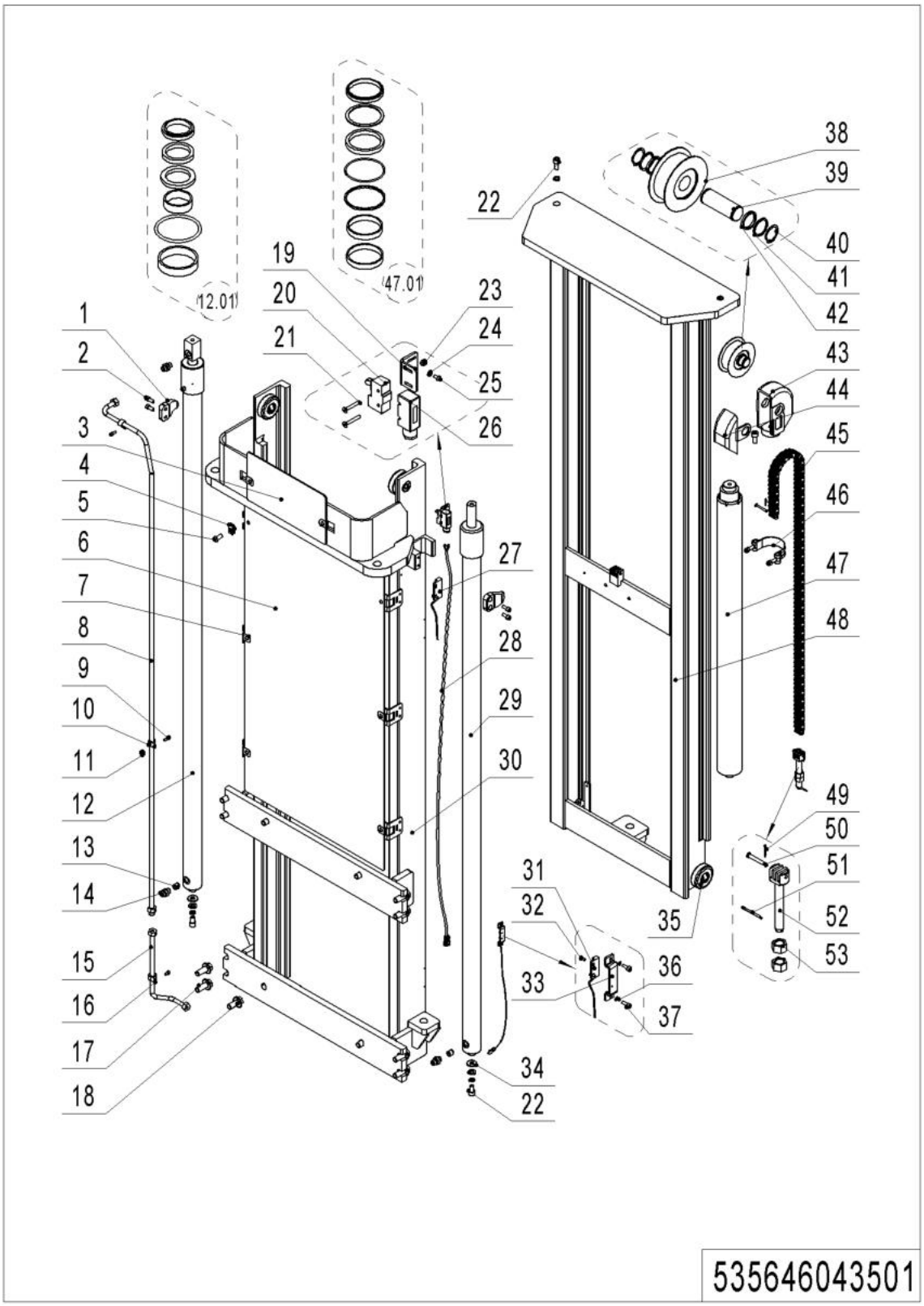

02 Two-stage mast full free lift (535646043501) Continuation 1

No.	Item Code	Mark	Item Description	Qty.	Substitute	Note
23	910300500001	1	Nut	2		
24	910400100003	1	Flat Washer	2		
25	910200300005	1	Screw	2		
26	920200300008		Protective Cover	1		
27	535933510012		Switch	1		**2900**
27	535933510013		Switch	1		**3200**
27	535933510015		Switch	1		**3600**
27	535933510021		Switch	1		**EN1175-2020**
28	535933510025		Wire harness	1		
29	534444010023		Cylinder	1		**2900**
29	534444010022		Cylinder	1		**3200**
29	534444010021		Cylinder	1		**3600**
30	534443510004	2	Outer Mast(2900)	1		
30	534443510002	2	Outer Mast(3200)	1		
30	534443510000	2	Outer Mast(3600)	1		
31	535933510005		Switch	1		
31	535933510020		Switch	1		**EN1175-2020**
32	910200500010	1	Screw	2		
32	910200500021	1	Screw	4		**EN1175-2020**
33	534744520059		Protective Cover	2		
33	534744520080		Protective Cover	2		**EN1175-2020**
34	534744520015		Subplate	2		
35	940200300001		Compound Roller	4		
36	910400500003	1	Spring Washer	4		
37	910200300006	1	Screw	4		
38	940200500010		Sprocket Bearing	1		
39	910401300016		Circlip	1		
40	532644520037	1	Axle	2		
41	940600500009	1	Washer	2		
42	940600500008	1	Washer	2		

02 Two-stage mast full free lift (535646043501) Continuation 2

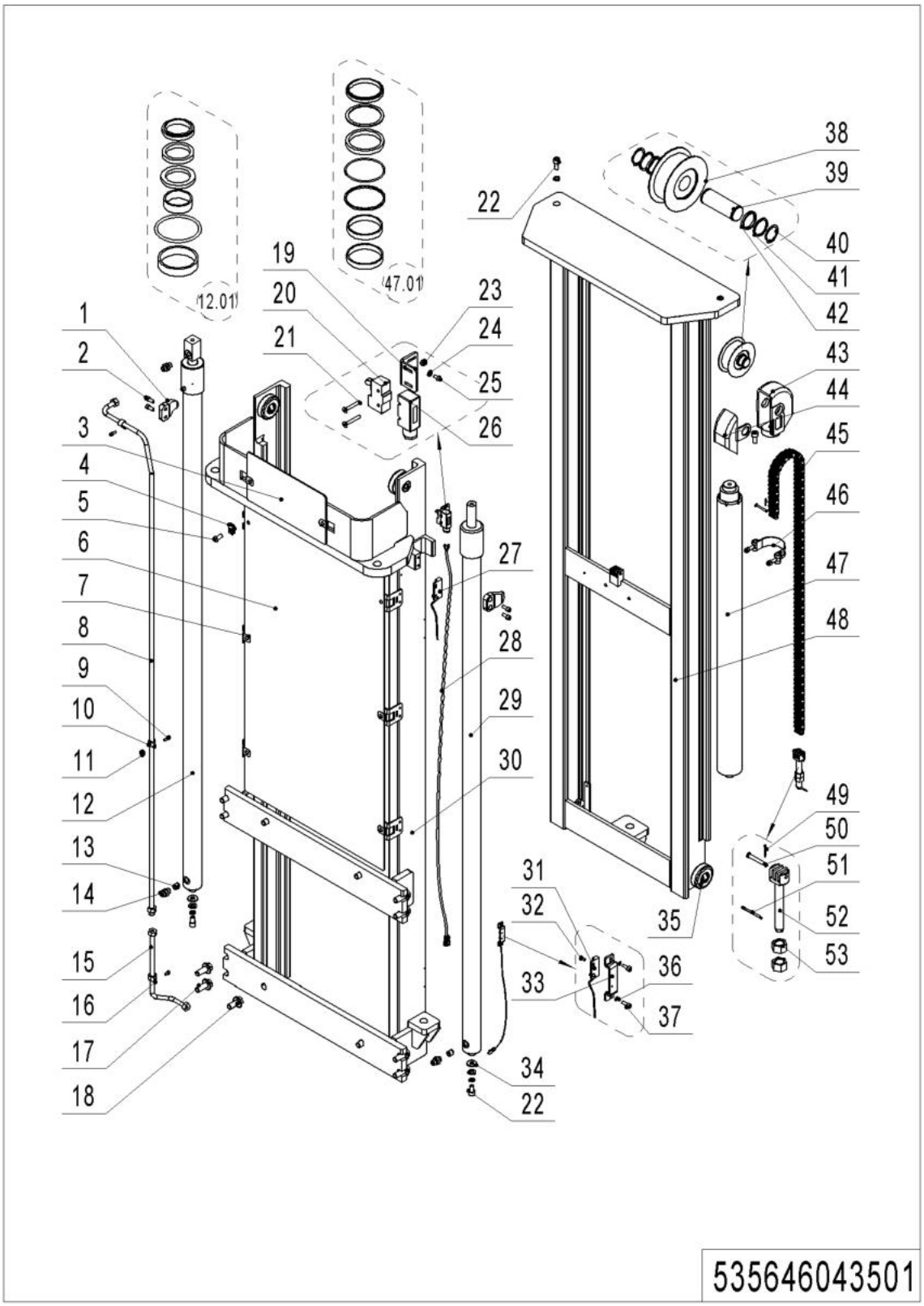

02 Two-stage mast full free lift (535646043501) Continuation 2

No.	Item Code	Mark	Item Description	Qty.	Substitute	Note
43	532644520035		Yoke	1		
44	532644520036		Side Cover	1		
45	251044510096		Chain	1		**2900**
45	534744510024		Chain	1		**3200**
45	532644510079		Chain	1		**3600**
46	940800600002		Hoop	1		
47	534444010020		Cylinder	1		**2900**
47	534444010019		Cylinder	1		**3200**
47	534444010018		Cylinder	1		**3600**
47.01	534498510001		Seal Kit	1		
48	534443510005	2	Inner Mast(2900)	1		
48	534443510003	2	Inner Mast(3200)	1		
48	534443510001	2	Inner Mast(3600)	1		
49	910600600006	1	Cotter Pin	2		
50	941100800012		Pin	2		
51	910600600023	1	Cotter Pin	1		
52	532644520038		Chain Anchor	1		
53	910300200008	1	Nut	2		

03 Triple Mast Full Free Lift (535646044501)

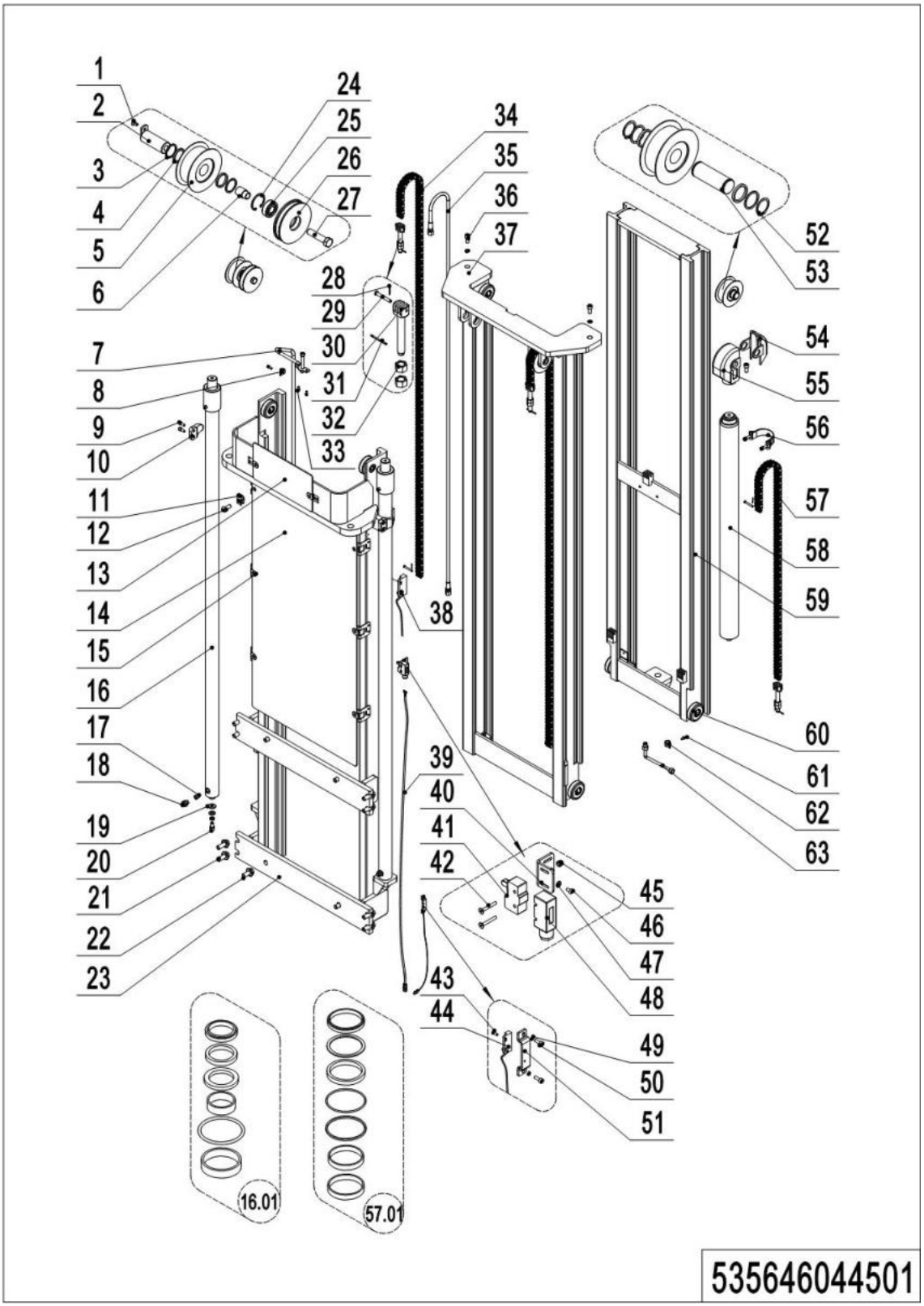

03 Triple Mast Full Free Lift (535646044501)

No.	Item Code	Mark	Item Description	Qty.	Substitute	Note
1	910200400016	1	Screw	2		
2	533544510006		Pin	2		
3	940200500010		Sprocket Bearing	3		
4	940600500009	1	Washer	6		
5	940600500008	1	Washer	6		
6	535944520001		Sleeve	1		
7	534744510021		Steel Tube	1		**4300**
7	534744510020		Steel Tube	1		**4600**
8	951000100001		Hose Clamp	2		
9	910200200057	1	Screw	4		
10	275044020076		Fixing Plate	2		
11	940400400003		Cage Nut	2		
12	941100100005	1	Screw	2		
13	534744520037		Guard Plate	1		
14	534744520039		Guard Plate	1		**4300**
14	534744520038		Guard Plate	1		**4600**
15	940400300001		Spring Buckle	6		
16	534744510017		Cylinder	2		**4300**
16	534744510016		Cylinder	2		**4600**
16.01	534798510000		Seal Kit	2		
17	950600300001		Safety Valve	3		
18	950400400003		Joint	3		
19	534744520015		Subplate	2		
20	910200200096	1	Screw	2		
21	910100800006	1	Bolt	8		
22	910100800005	1	Bolt	4		
23	534444510004	2	Outer Mast(4300)	1		
23	534444510000	2	Outer Mast(4600)	1		
24	910401400013	1	Circlip	1		
25	910700200019		Bearing	1		

1= Supply as package. 2= Supply with constraints. 3= Phasing-out supply. 4= Supply as assembly. 5= Check other tables.

03 Triple Mast Full Free Lift (535646044501) Continuation 1

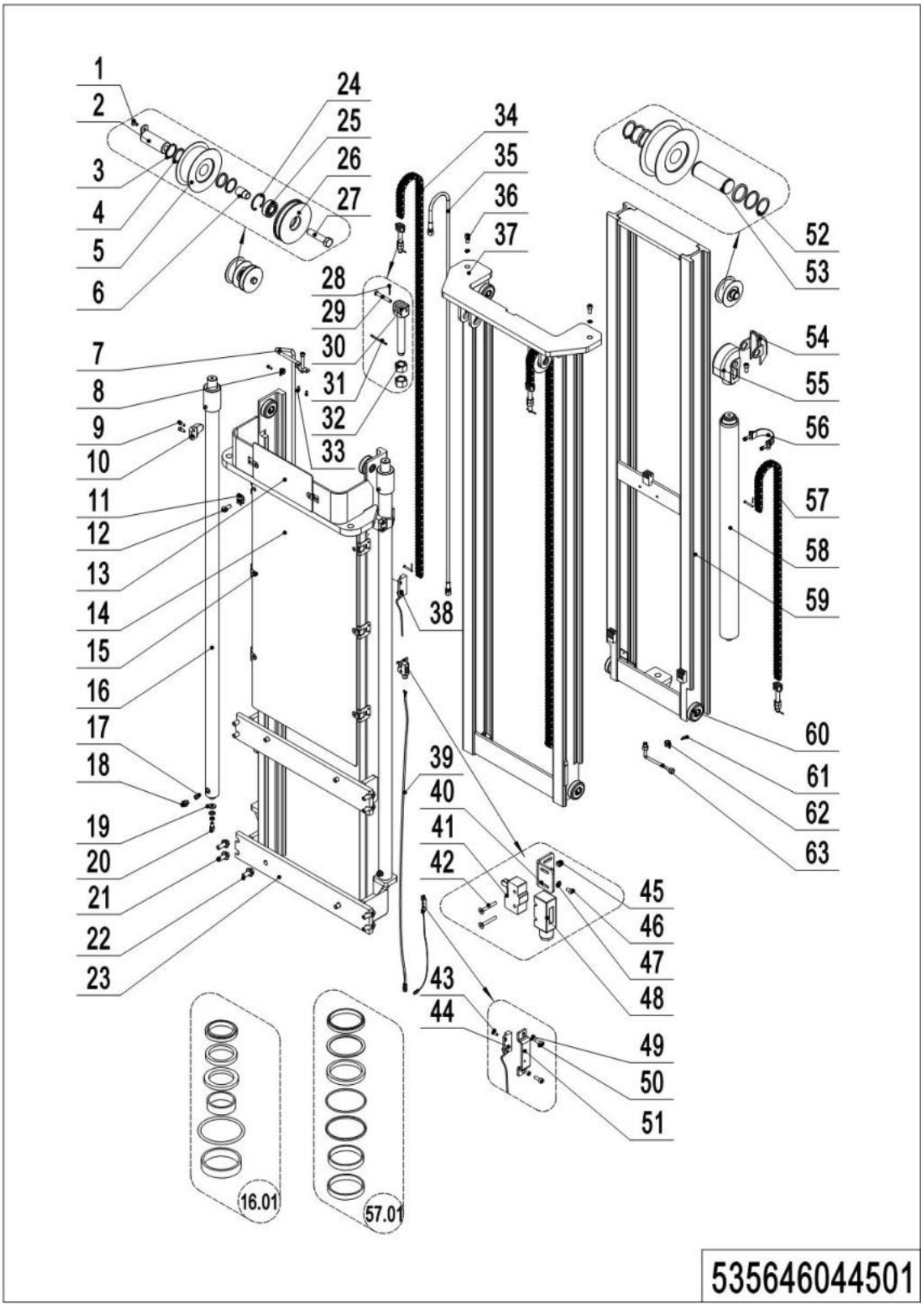

03 Triple Mast Full Free Lift (535646044501) Continuation 1

No.	Item Code	Mark	Item Description	Qty.	Substitute	Note
26	535944520000		Pulley	1		
27	910100100073		Bolt	1		
28	910600600006	1	Cotter Pin	6		
29	941100800012		Pin	6		
30	532644520038		Chain Anchor	3		
31	910600600023	1	Cotter Pin	3		
32	910300200008	1	Nut	6		
33	910200200033	1	Screw	2		
34	534745010009		Chain	2		**4300**
34	534145010005		Chain	2		**4600**
35	532644520143		Hose	1		**4300**
35	532644520144		Hose	1		**4600**
36	910200200097	1	Screw	3		
37	534444510005	2	Middle Mast(4300)	1		
37	534444510001	2	Middle Mast(4600)	1		
38	535933510013		Switch	1		**4300**
38	535933510014		Switch	1		**4600**
38	535933510021		Switch	1		**EN1175-2020**
39	535933510025		Wire Harness	1		
40	534744520036		Fixing Plate	1		
41	920200300001		Microswitch	1		
42	910200400007	1	Screw	2		
43	910200500010	1	Screw	4		
43	910200500021	1	Screw	4		**EN1175-2020**
44	535933510005		Switch	1		
44	535933510020		Switch	1		**EN1175-2020**
45	910300500001	1	Nut	2		
46	910200300005	1	Screw	2		
47	910400100003	1	Flat Washer	2		
48	920200300008		Protective Cover	1		

1= Supply as package. 2= Supply with constraints. 3= Phasing-out supply. 4= Supply as assembly. 5= Check other tables.

03 Triple Mast Full Free Lift (535646044501) Continuation 2

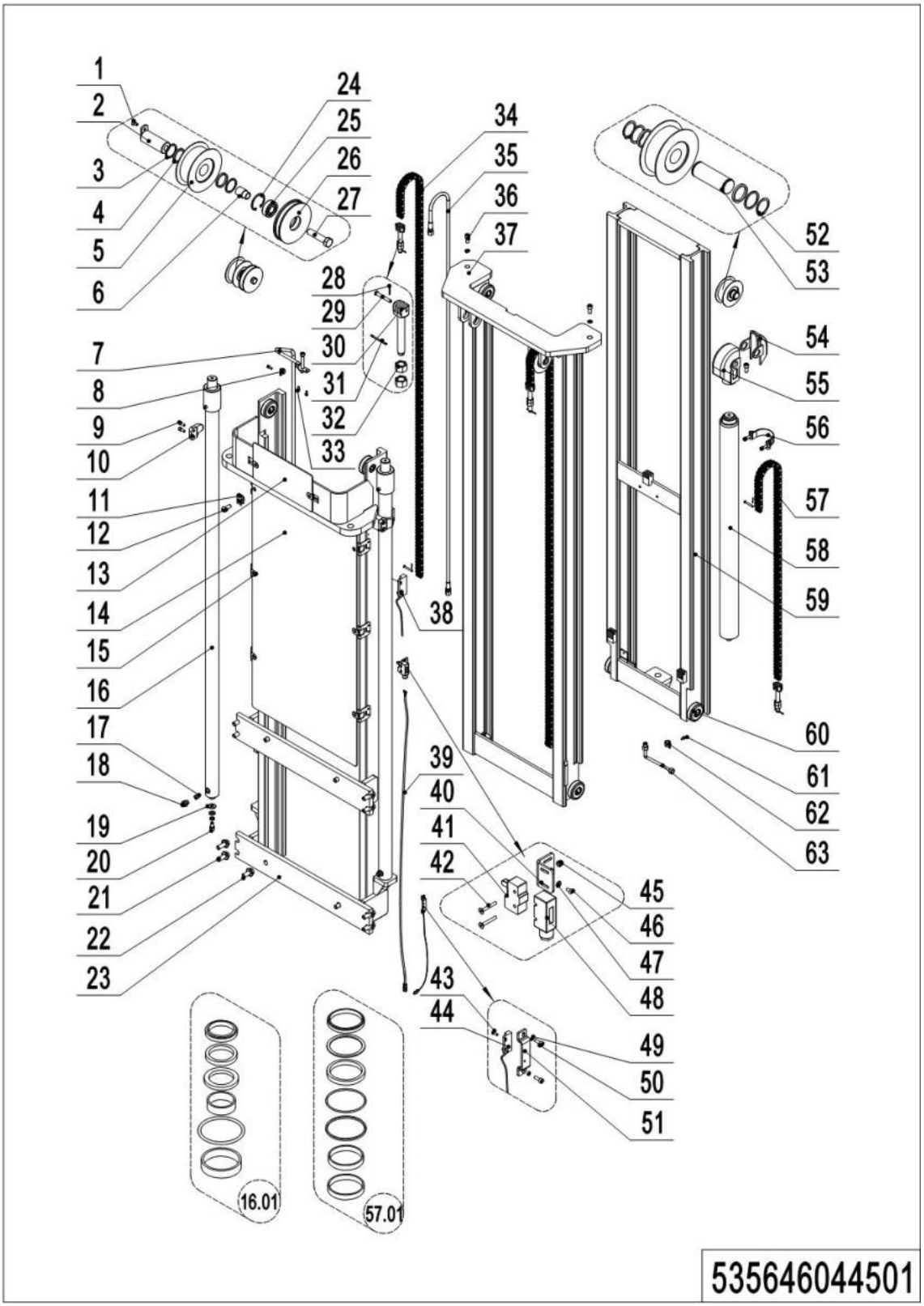

03 Triple Mast Full Free Lift (535646044501) Continuation 2

No.	Item Code	Mark	Item Description	Qty.	Substitute	Note
49	910400500003	1	Spring Washer	4		
50	910200200014	1	Screw	4		
51	534744520059		Protective Cover	2		
51	534744520080		Protective Cover	2		**EN1175-2020**
52	910401300016	1	Circlip	2		
53	532644520037		Axle	1		
54	532644520036		Side Cover	1		
55	532644520035		Yoke	1		
56	940800600002		Hoop	1		
57	532644510083		Chain	1		**4300**
57	534444510003		Chain	1		**4600**
58	534744510013		Cylinder	1		**4300**
58	534744510012		Cylinder	1		**4600**
58.01	534798510001		Seal Kit	1		
59	534444510006	2	Inner Mast(4300)	1		
59	534444510002	2	Inner Mast(4600)	1		
60	940200300001		Compound Roller	8		
61	910200200032	1	Screw	1		
62	951000100003		Hose Clamp	1		
63	533544520006		Steel Tube	1		

Chapter 5: Steering System, Braking System, Wheels

01 Handle assembly (504446011001)

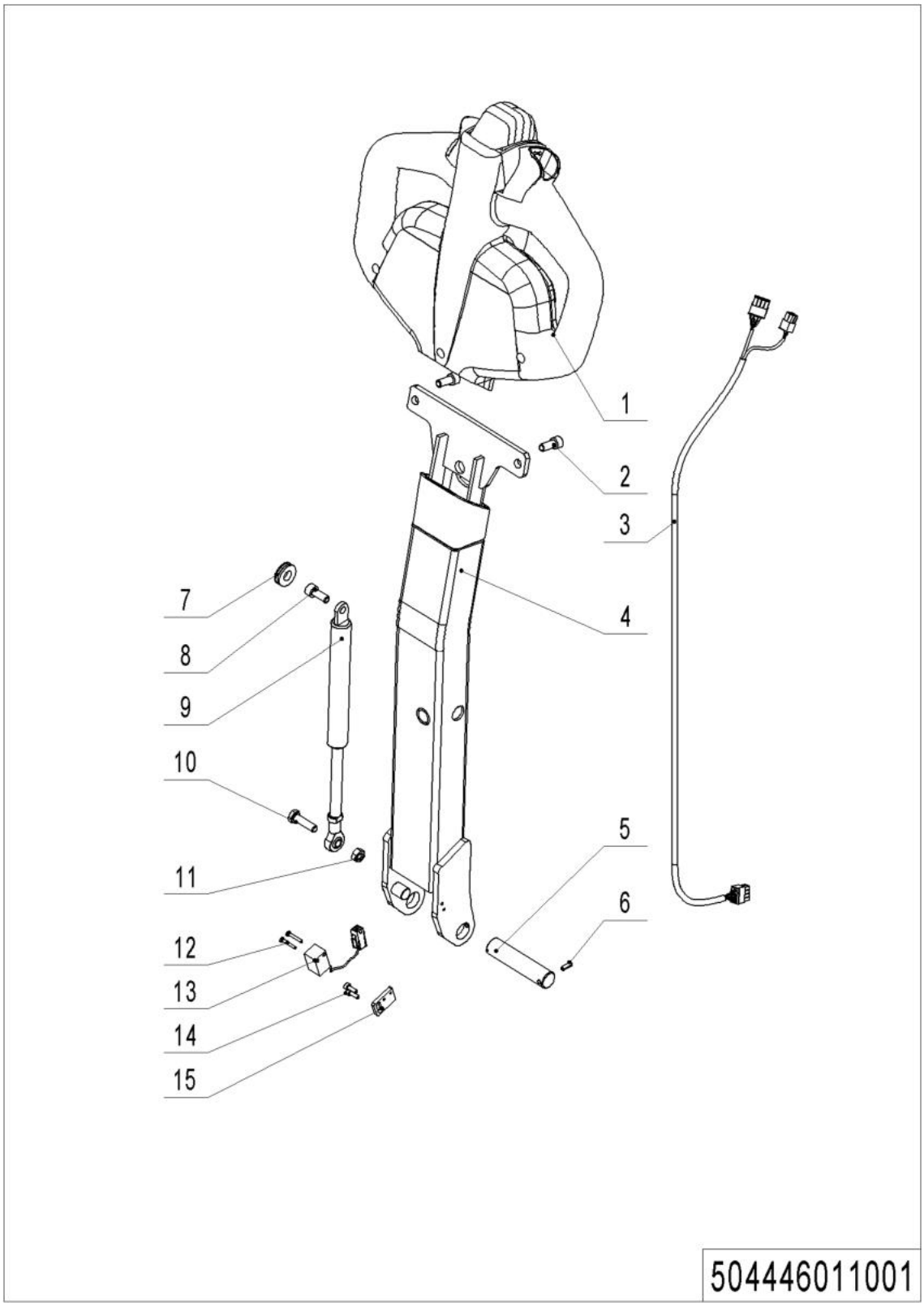

01 Handle assembly (504446011001)

No.	Item Code	Mark	Item Description	Qty.	Substitute	Note
1	922100100001		Tiller	1		See 535946011002
1	922100100099		Tiller	1		EN1175:2020, See 505646011004
2	910200200057	1	Screw	2		
3	534733010001		Wire Harness	1		
3	534733010032		Wire Harness	1		EN1175:2020
4	504411010001		Tiller	1		
5	504411020011		Axle	1		
6	910600400009	1	Spring Pin	1		
7	502311020009		Close Plate	1		
8	941100400001	1	Screw	1		
9	940400100011		Air Spring	1		
10	910100300024	1	Bolt	1		
11	910300100006	1	Nut	1		
12	910200500015	1	Screw	2		
13	505633510002		Proximity Switch	1		
14	910200200014	1	Screw	2		
15	504411020009		Baseboard	1		

02 Control Handle (505646011004)

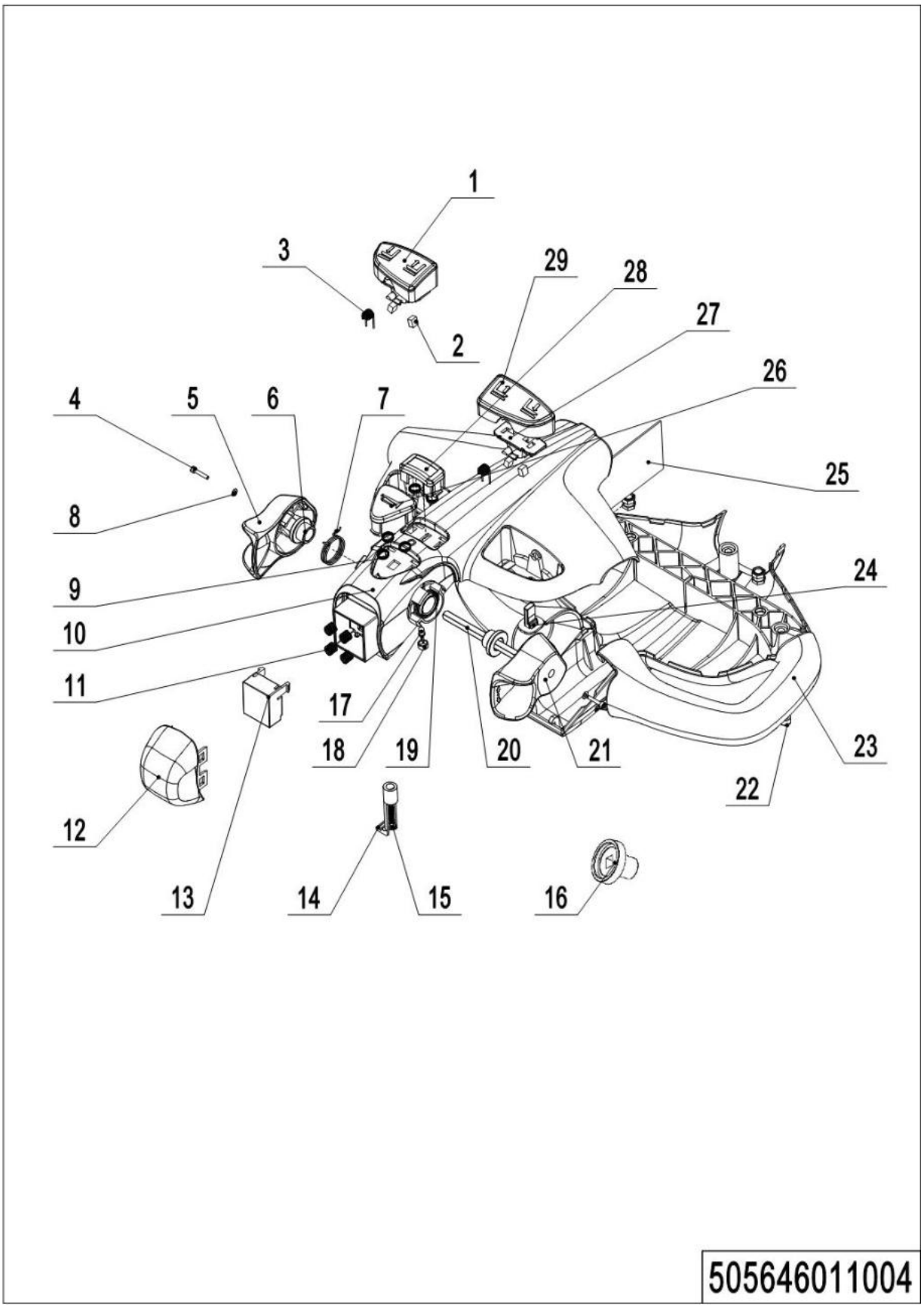

02 Control Handle (505646011004)

No.	Item Code	Mark	Item Description	Qty.	Substitute	Note
--	922100100001		Tiller	1		
--	922100100099		Tiller	1		
1	505698520016		Button cap	1		
2	505698520005		Magnet	4		
3	505698520018		Torsional Spring	2		
4	505698520008		Screw	2		
5	505698520001		Traction lever	1		
6	505698520004		Sleeve	2		
7	505698520027		Torsional Spring	1		
8	505698520009		Washer	2		
9	505698520003		Spring	5		
10	505698520014		Handle Cap	1		
10	505698520099		Spring	1		EN1175:2020
11	505698520006		Button Cap-	4		
12	505698520020		Pedestal	1		
13	505698520019		Clamp			
13	505698520100		Screw	1		EN1175:2020
14	505698520012		Magnet holder	1		
15	505698520023		Light	1		
16	505698520102		Lamp Holder	2		
17	505698520024		Torsional Spring	1		
18	505698520025		Axle-Traction lever	1		
19	505698520026		Traction lever	1		
20	505698520011		Screw	1		
21	505698520010		Handle Cap	1		
22	505698520007		Sensor	3		
23	505698520015		circuit Board	1		
24	505698520013		Screw	2		
25	505698520028		Traction lever			
25	505698520101		Sleeve	1		EN1175:2020

02 Control Handle (505646011004) Continuation

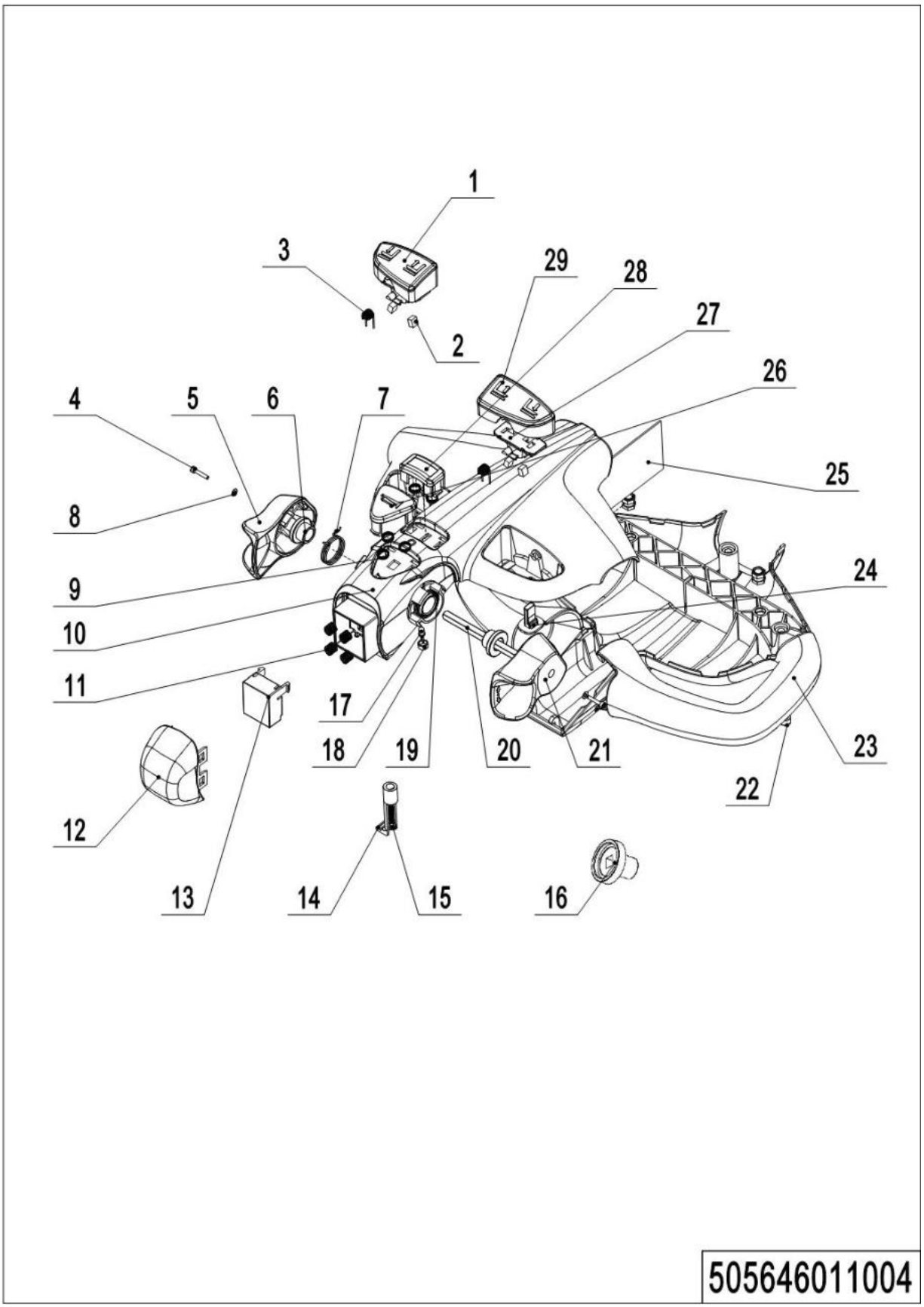

02 Control Handle (505646011004) Continuation

No.	Item Code	Mark	Item Description	Qty.	Substitute	Note
26	505698520002		Horn Button	1		
27	505698520017		Fixing Base	2		
28	505698520021		Button Cap	1		
29	505698520022		Button Cap	1		

03 Load Wheel (561746017001)

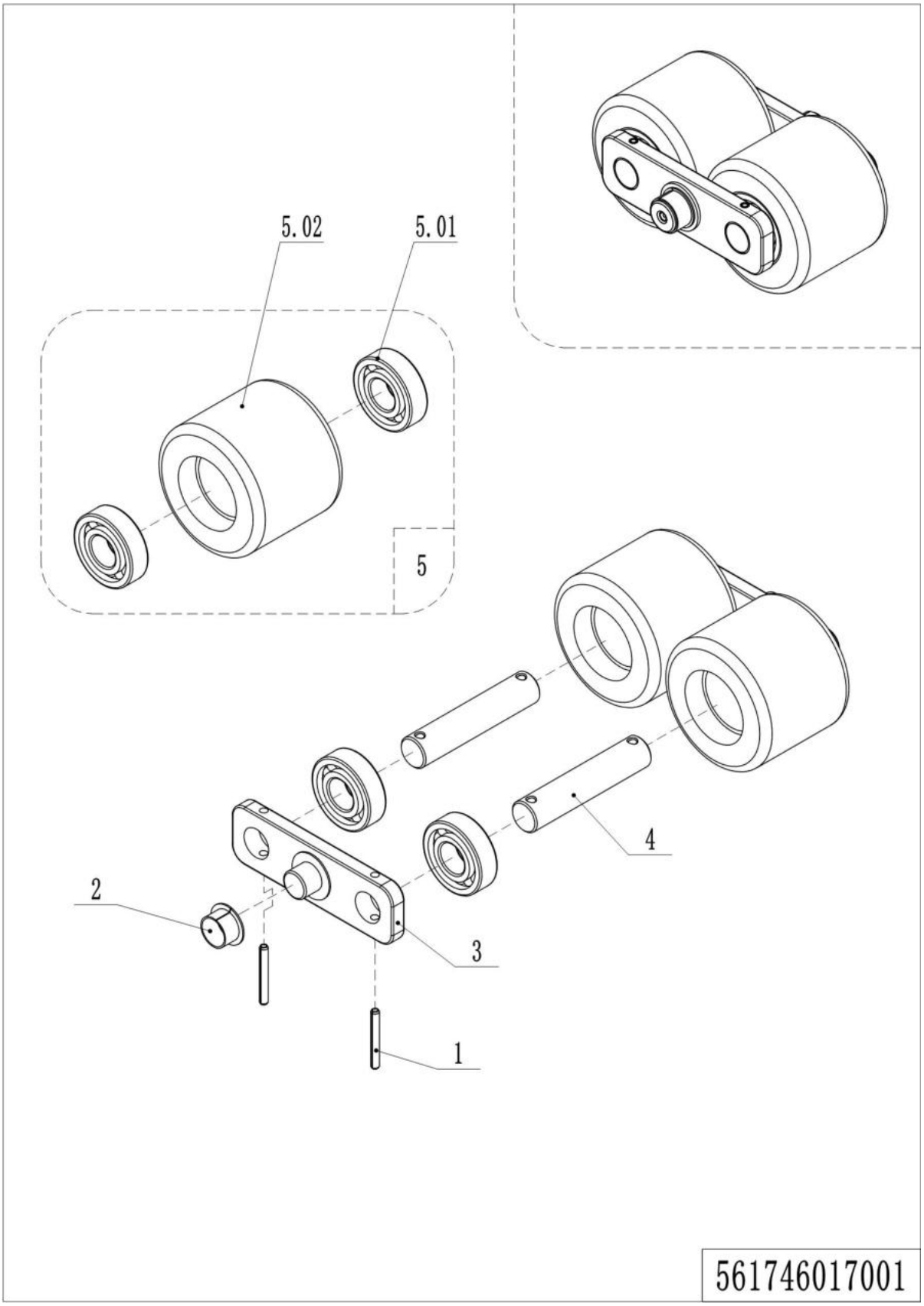

1= Supply as package. 2= Supply with constraints. 3= Phasing-out supply. 4= Supply as assembly. 5= Check other tables.

03 Load Wheel (561746017001)

No.	Item Code	Mark	Item Description	Qty.	Substitute	Note
--	562098510002		Wheel	2		
1	910600400028		Spring Pin	4		
2	940500200003		Bushing	4		
3	505617020001		Plate	4		
4	560517020000		Axle	4		
5	532998510001		Wheel	4		
5.01	910700200019		Bearing	8		
5.02	940300300009		WheelΦ84x70	4		

04 Caster (534746016501)

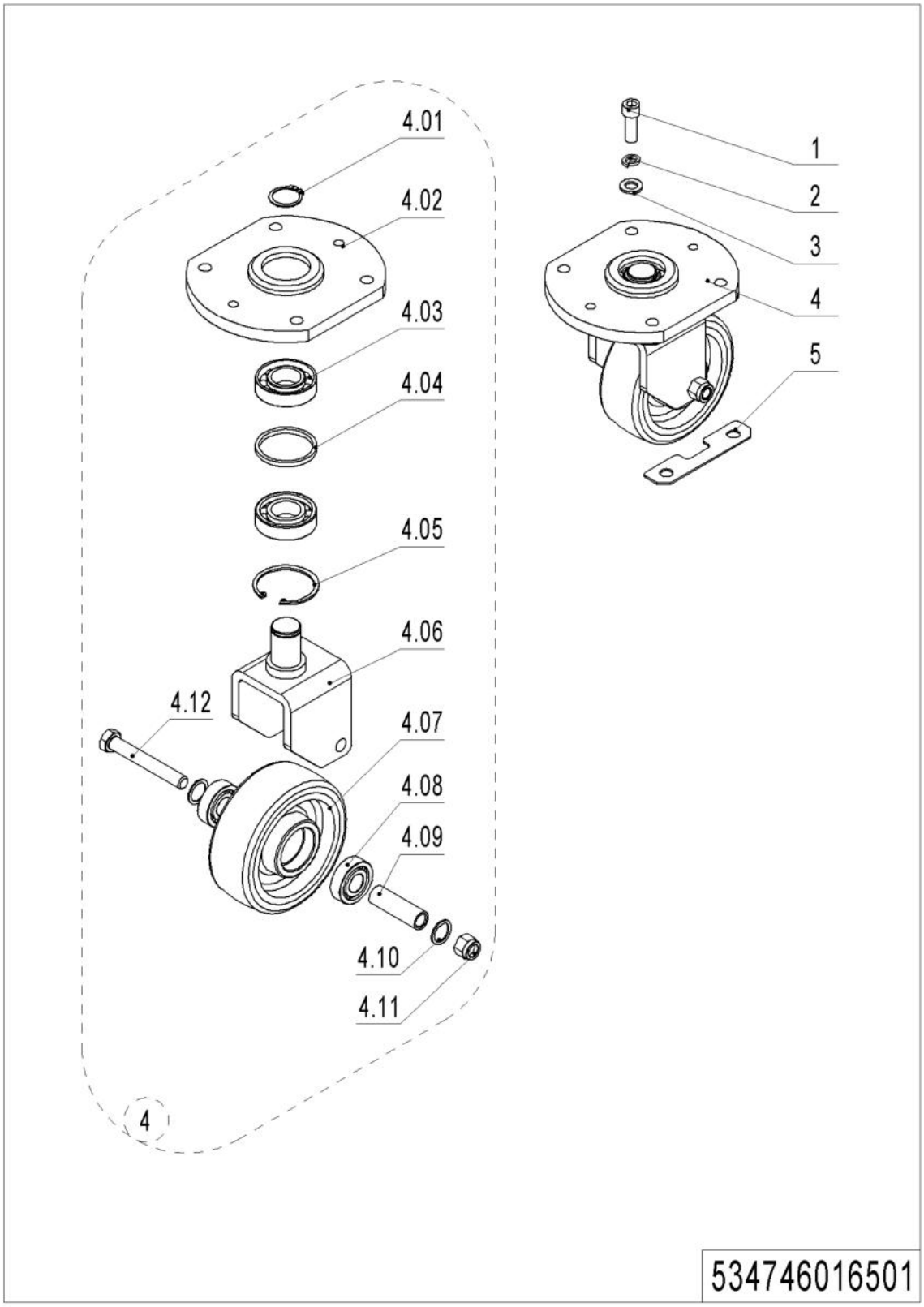

04 Caster (534746016501)

No.	Item Code	Mark	Item Description	Qty.	Substitute	Note
1	910200200099	1	Screw	4		
2	910400500008	1	Spring Washer	4		
3	910400100008	1	Flat Washer	4		
4	534716510002		Caster Assembly	1		
4.01	910401300016	1	Circlip	1		
4.02	534716510000		Bracket	1		
4.03	910700400004		Bearing	2		
4.04	532616520001	1	Check Ring	1		
4.05	910401400018	1	Circlip	1		
4.06	534716510001	2	Wheel Carrier	1		
4.07	940300300020		WheelΦ150x54	1		
4.08	910700200019		Bearing	2		
4.09	532616520003		Bushing	1		
4.10	940600500014	1	Washer	2		
4.11	910300500007	1	Nut	1		
4.12	910100100069	1	Bolt	1		
5	534721520026		Subplate	6		

Chapter 6: Electrical Parts

01 Display Assembly (534746010001)

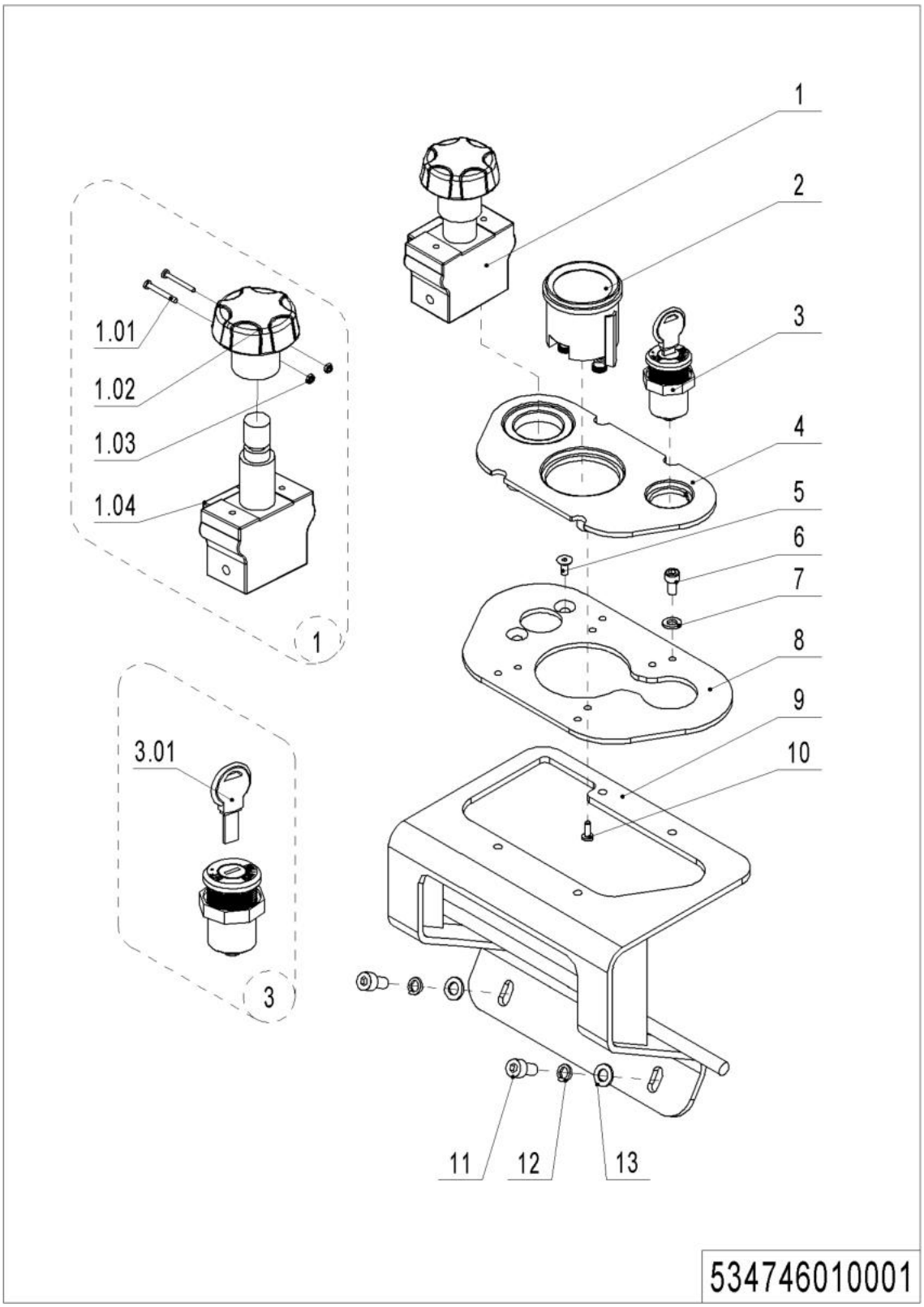

01 Display Assembly (534746010001)

No.	Item Code	Mark	Item Description	Qty.	Substitute	Note
1	920200100001		Emergency Button	1		
1.01	910200500016		Screw	2		
1.02	505698520029		Button	1		
1.03	910300100002		Nut	2		
1.04	505698520030		Proximity Switch	1		
2	921100100012		Display	1		
2	921100100116		Display(curtis)	1		EN1175:2020
3	505634010000		Key Switch	1		
3	505634010001		Key Switch	1		锂电
3.01	505698520031		Key Switch	1		
4	534710020004		Panel	1		
5	910200400010		Screw	2		
6	910200200036		Screw	4		
7	910400100005		Flat Washer	4		
8	534710020005		Fixing Base	1		
9	534710010000		Mounting Plate	1		
10	910201300001		Screw	4		
11	910200200055		Screw	2		
12	910400500006		Spring Washer	2		
13	910400100006		Flat Washer	2		

02 Electronic Components (561746033001)

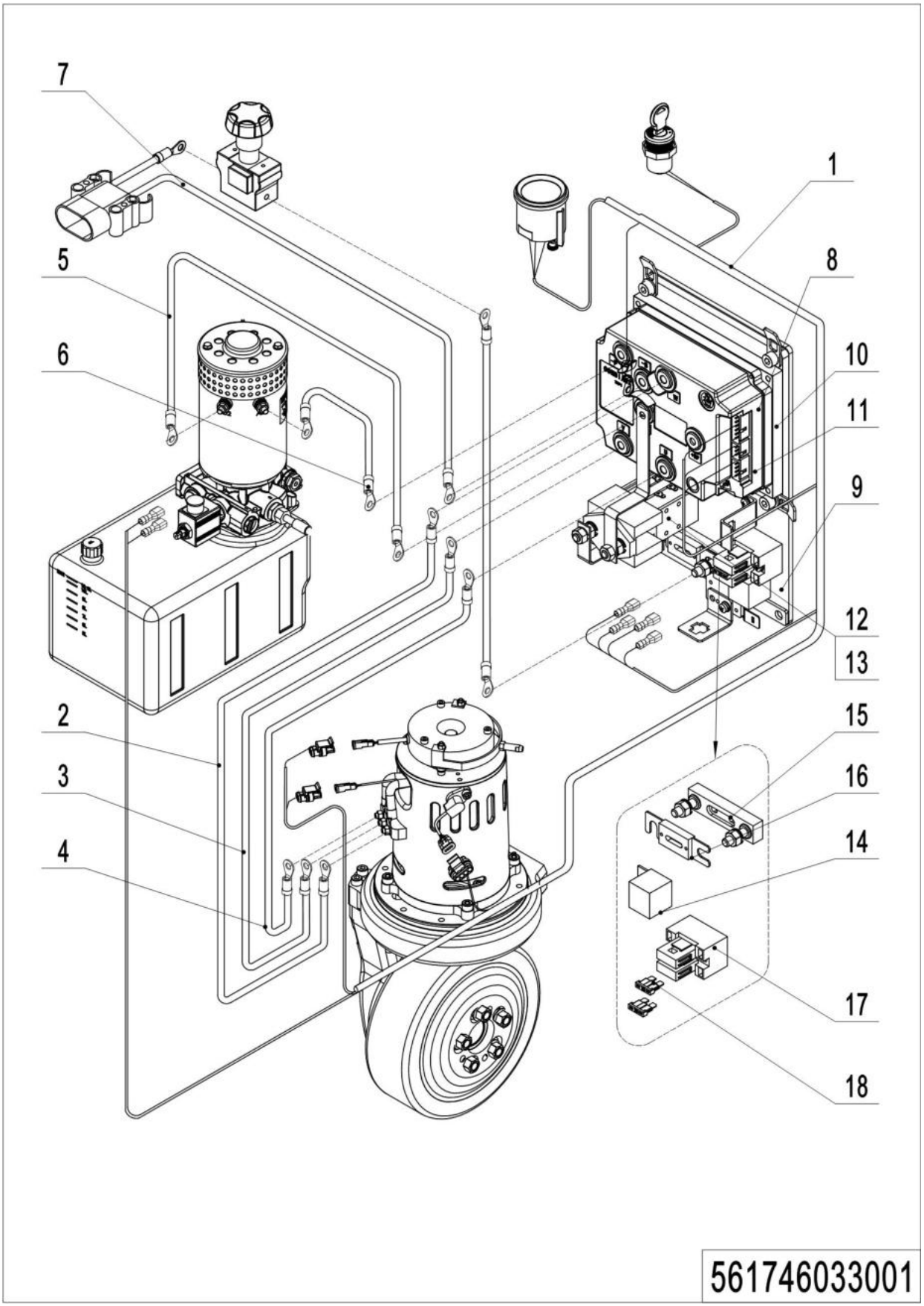

1= Supply as package. 2= Supply with constraints. 3= Phasing-out supply. 4= Supply as assembly. 5= Check other tables.

02 Electronic Components (561746033001)

No.	Item Code	Mark	Item Description	Qty.	Substitute	Note
1	561733010000		Wire Harness			
2	534733010003		Cable			
3	534733010004		Cable			
4	534733010005		Cable			
5	534733010006		Cable			
6	534733010007		Cable			
7	561733010003		Wire Harness			
8	561733010004		Electronic Components			
9	534721520027		Mounting Plate			
10	534733020000		Plate			
11	921400100048		Controller			
12	920700100002		Contactor			
13	921300400004		Holder			
14	920800100001		Relay			
15	920100400002		Fuse Holder			
16	920100100013		Fuse			
17	920100400005		Fuse Holder			
18	920100200002		Fuse			

02 Electronic Components (EN1175:2020) (561746033011)

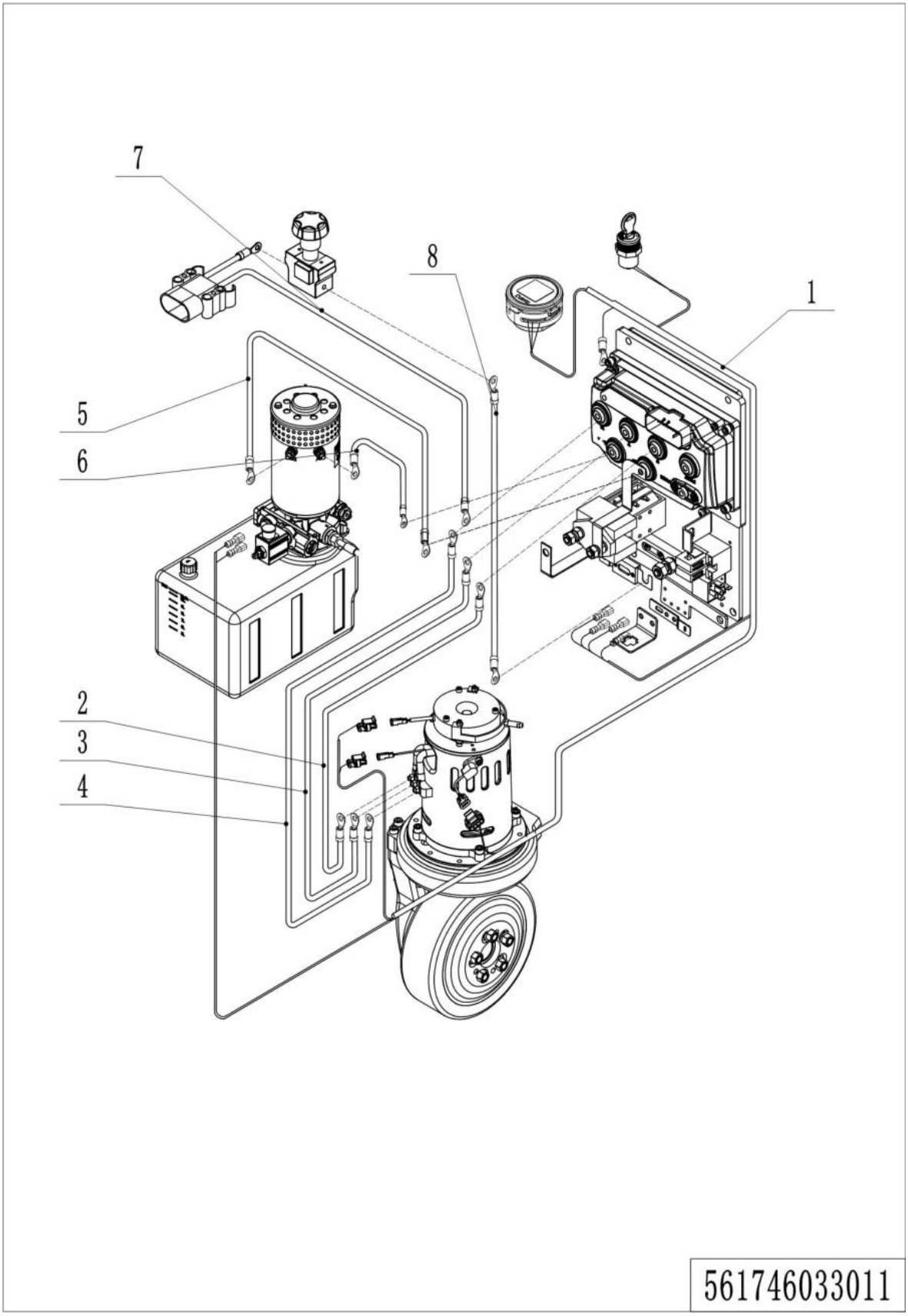

02 Electronic Components (EN1175:2020) (561746033011)

No.	Item Code	Mark	Item Description	Qty.	Substitute	Note
1	561733010011		Wire Harness	1		
1	561733010012		Wire Harness	1		lithium battery
2	561733010017		Cable	1		
3	561733010018		Cable	1		
4	561733010019		Cable	1		
5	561733010020		Cable	1		
6	561733010021		Cable	1		
7	561733010003		Cable	1		
7	561733010010		Cable	1		lithium battery
8	534733010009		Cable	1		

03 Electric control assembly (EN1175:2020) (561746033013)

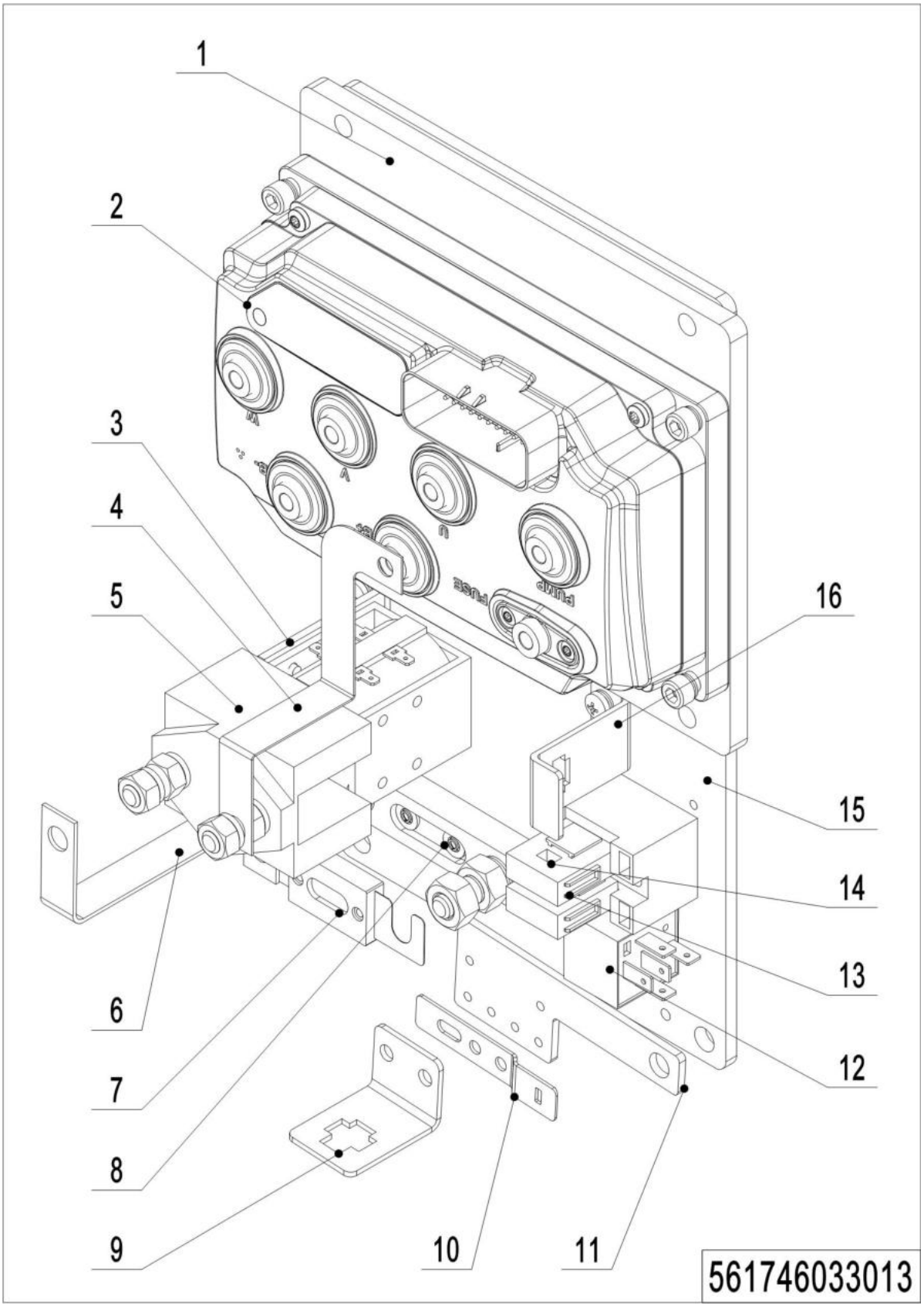

1= Supply as package. 2= Supply with constraints. 3= Phasing-out supply. 4= Supply as assembly. 5= Check other tables.

03 Electric control assembly (EN1175:2020) (561746033013)

No.	Item Code	Mark	Item Description	Qty.	Substitute	Note
1	534733020003		Aluminium plate	1		
2	921400100124		Controller	1		
3	534733020004		Copper bar	1		
4	921300400004		Fixed mount	1		
5	920700100002		Contactor	1		
6	534733020002		Copper bar	1		
7	920100100013		Fuse350A	1		
8	920100400002		Fuse Holder	1		
9	921300300002		Fixed mount	1		
10	921300300005		Fixed mount	1		
11	921300300008		Fixed mount	1		
12	920800100011		Relay	1		
13	920100400005		Fuse Holder	1		
14	920100200002		Fuse10A 10A	1		
15	534721520027		Mounting plate	1		
16	921300300001		Fixed mount	1		

04 Charger (534446036501)

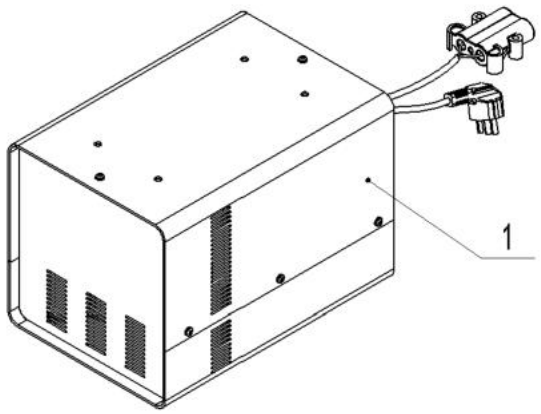

534446036501

03 Charger (534446036501)

No.	Item Code	Mark	Item Description	Qty.	Substitute	Note
1	921000200013		Charger24V25A(Aisa-CHN)	1		
	921000200014		Charger24V25A(Aisa-ENG)	1		
	921000200015		Charger24V25A(EU)	1		
	921000200016		Charger24V25A(AUS)	1		
	921000200017		Charger24V25A(ENG)	1		
	921000200018		Charger24V25A(USA)	1		

05 Lithium battery charger(53444607002)

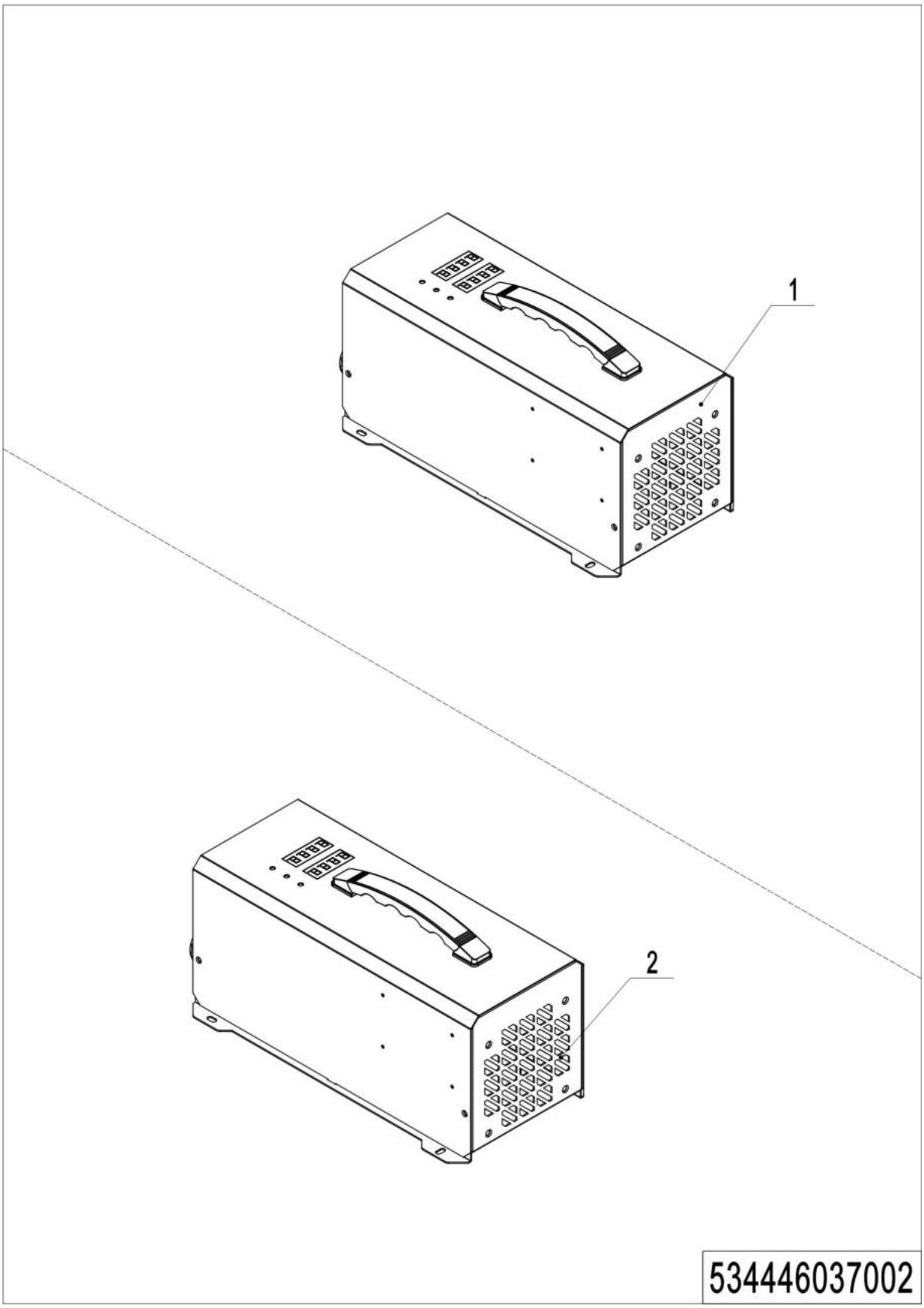

1= Supply as package. 2= Supply with constraints. 3= Phasing-out supply. 4= Supply as assembly. 5= Check other tables.

05 Lithium battery charger (534446036502)

No.	Item Code	Mark	Item Description	Qty.	Substitute	Note
1	921000200649	1	Charger24V60A(Aisa)	1	1	
1	921000200524		Charger24V60A(EU)	1	1	
1	921000200525		Charger24V60A(ENG)	1	1	
1	921000200526		Charger24V60A(AUS)	1	1	
1	921000200527		Charger24V60A(ISR)	1	1	
1	921000200528		Charger24V60A(ARG)	1	1	
1	921000200529		Charger24V60A(ZA)	1	1	
1	921000200530		Charger24V60A(USA)	1	1	
1	921000200631		Charger24V60A(THA)	1	1	
1	921000200523		Charger24V60A(Aisa-CN)	1	1	
1	921000200663		Charger24V60A （ZA）	1	1	110
1	921000200690		Charger24V60A(USA)	1	1	
1	921000200724		ChargerADY24V60A(BRA)	1	1	
1	921000200723		ChargerADY24V50A(USA)	1	1	110
1	921000200522		Charger24V60A(Aisa-CN)	1	1	

06 Traction Battery (534746037001)

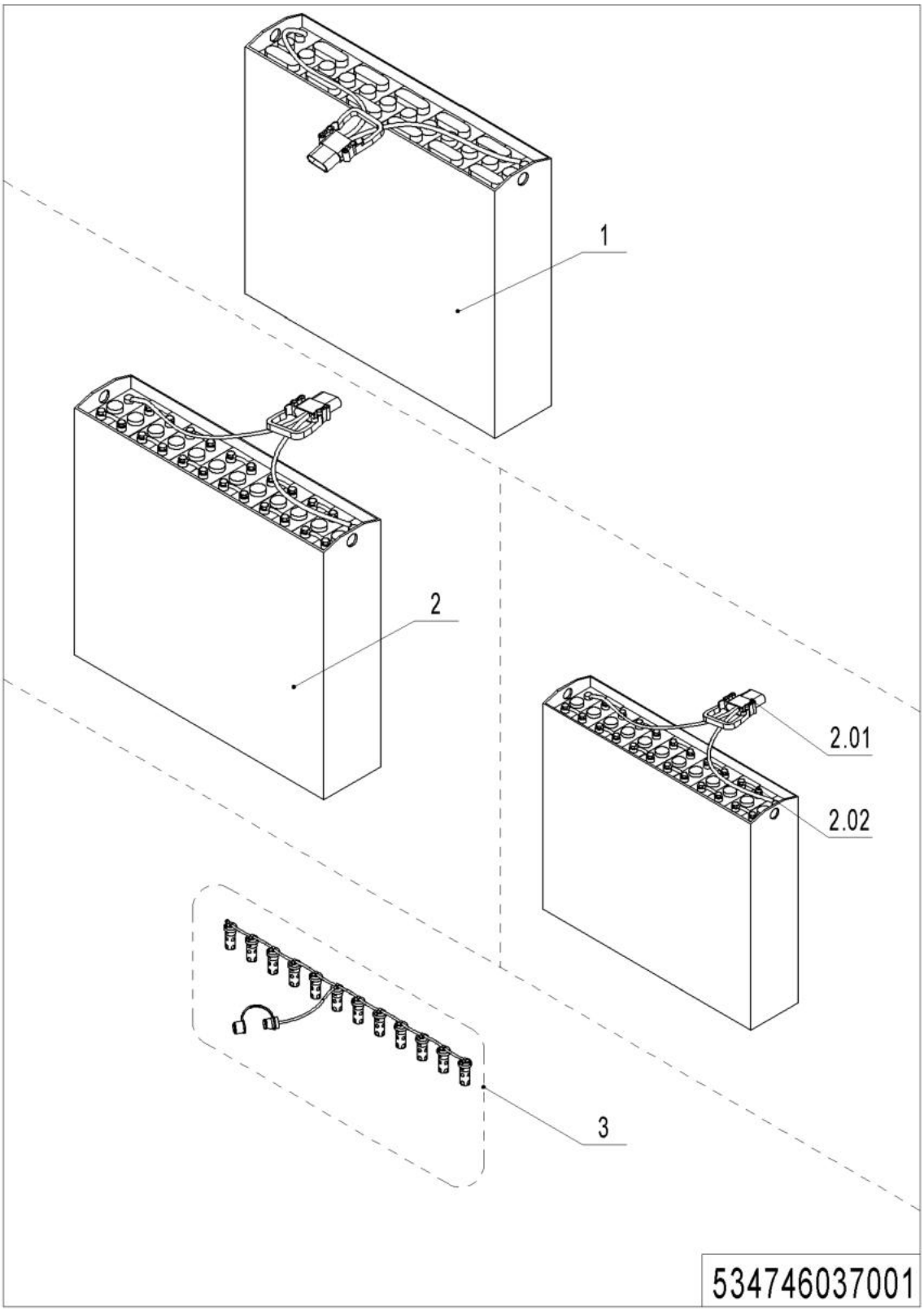

1= Supply as package. 2= Supply with constraints. 3= Phasing-out supply. 4= Supply as assembly. 5= Check other tables.

06 Traction Battery (534746037001)

No.	Item Code	Mark	Item Description	Qty.	Substitute	Note
1	534437010000		Battery24V180Ah(welded)	1		
1	920600100516		Battery24V180Ah(welded)	1		EN1175:2020
2	534437010001		Battery24V180Ah	1		
2	920600100592		Battery24V180Ah	1		EN1175:2020
2.01	920400100007		Connector	1		**For all battery**
2.02	505698520000		Bolt	24		**For bolted battery**
3	535937110000		Water refilling system	1		Optional, assemble as needed

07 Traction Battery (lithium battery) (534446037002)

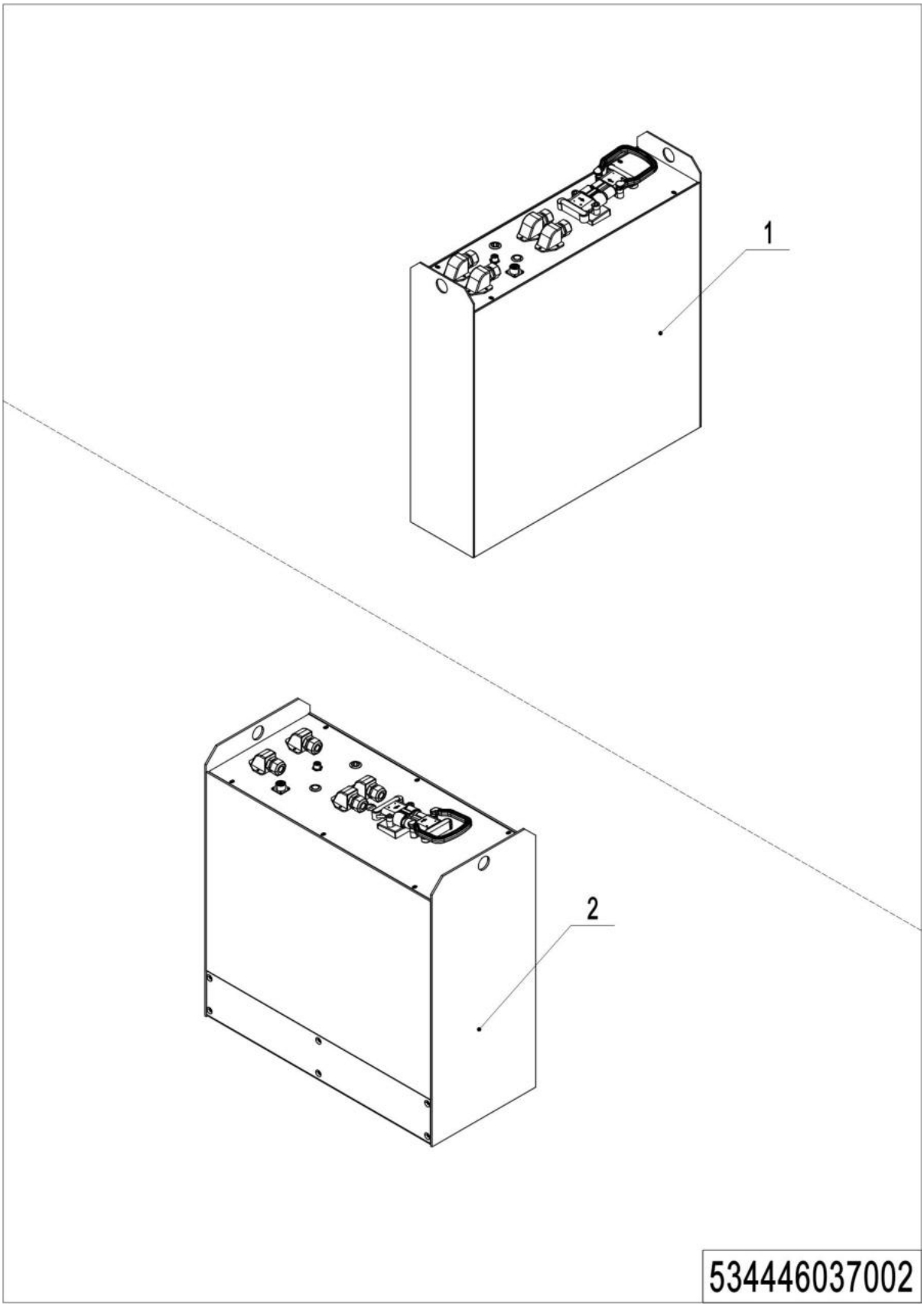

1= Supply as package. 2= Supply with constraints. 3= Phasing-out supply. 4= Supply as assembly. 5= Check other tables.

07 Traction Battery (lithium battery) (534446037002)

No.	Item Code	Mark	Item Description	Qty.	Substitute	Note
1	920600100304		Li-Battery 24V100Ah1HR-10			
2	920600100306		Li-Battery 24V150Ah1HR-13			

Chapter 7: Special Parts

01 Load Backrest (532646040501)

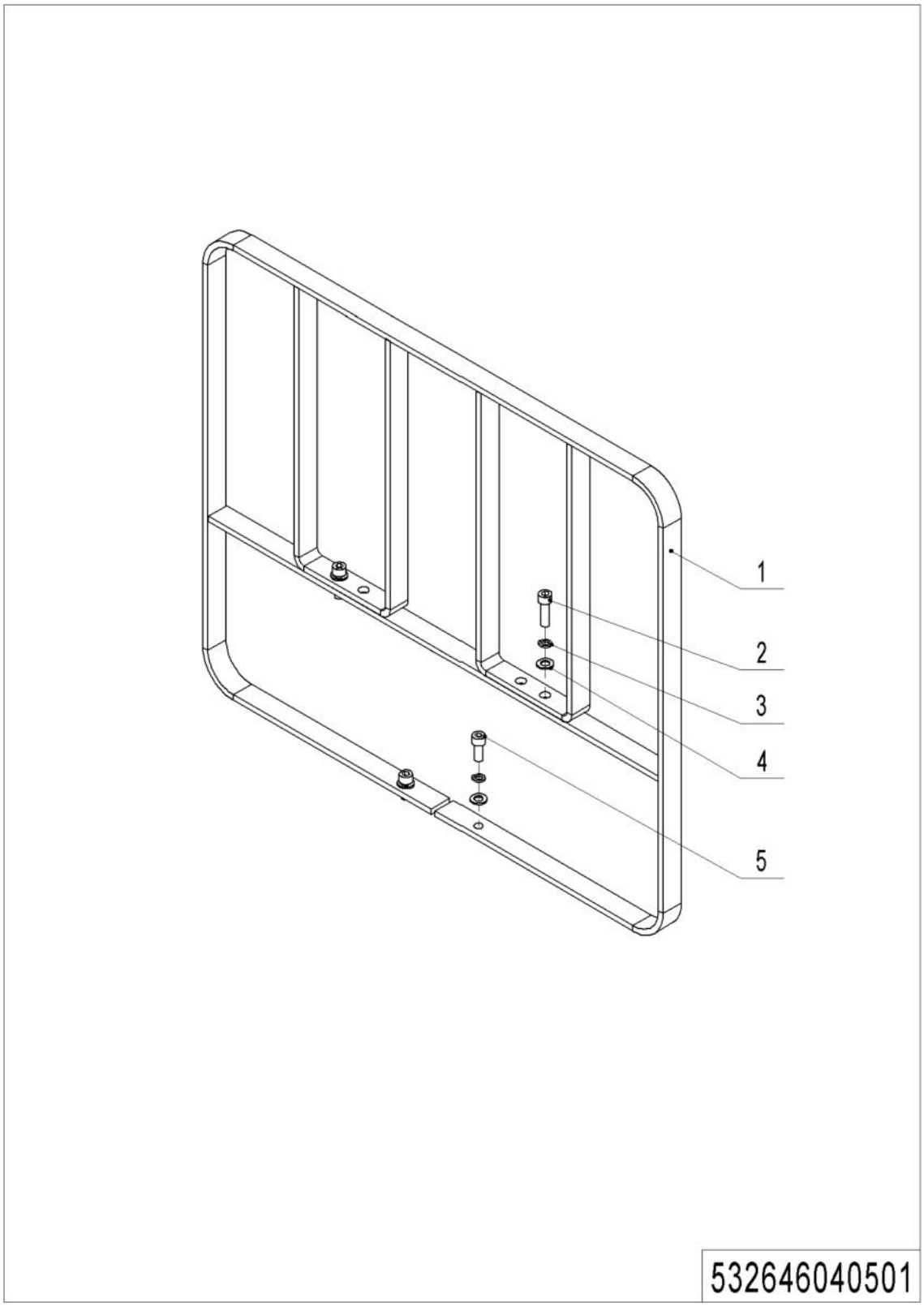

1= Supply as package. 2= Supply with constraints. 3= Phasing-out supply. 4= Supply as assembly. 5= Check other tables.

01 Load Backrest (532646040501)

No.	Item Code	Mark	Item Description	Qty.	Substitute	Note
1	532640510001	2	Load Backrest	1		
2	910200200076	1	Screw	2		
3	910400500007	1	Spring Washer	4		
4	910400100007	1	Flat Washer	4		
5	910200200078	1	Screw	2		

Chapter 8: Others

01 Label and Decal (EU) (561746047001)

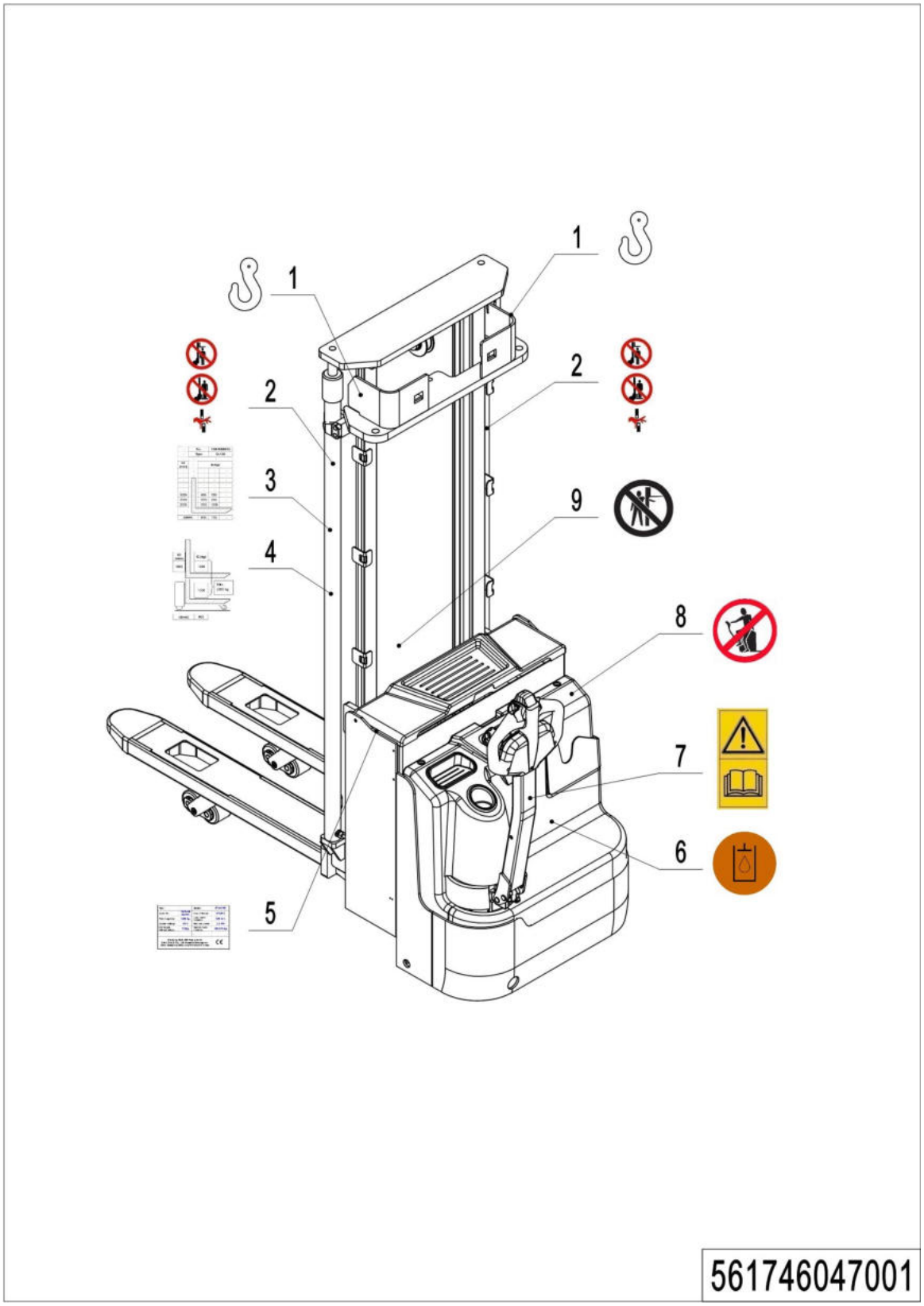

01 Label and Decal (EU) (561746047001)

No.	Item Code	Mark	Item Description	Qty.	Substitute	Note
1	941200300001		Label	2		
2	941200100004		Label	2		
3	561747520001		Label	1		
4	562047520020		Load Capacity Diagram	1		
5	561747520101		Truck data plate	1		
6	941200300003		Label	1		
7	941200300002		Label	1		
8	941200100003		Label	1		
9	941200100006		Label	1		

02 Label and Decal (US) (561746047002)

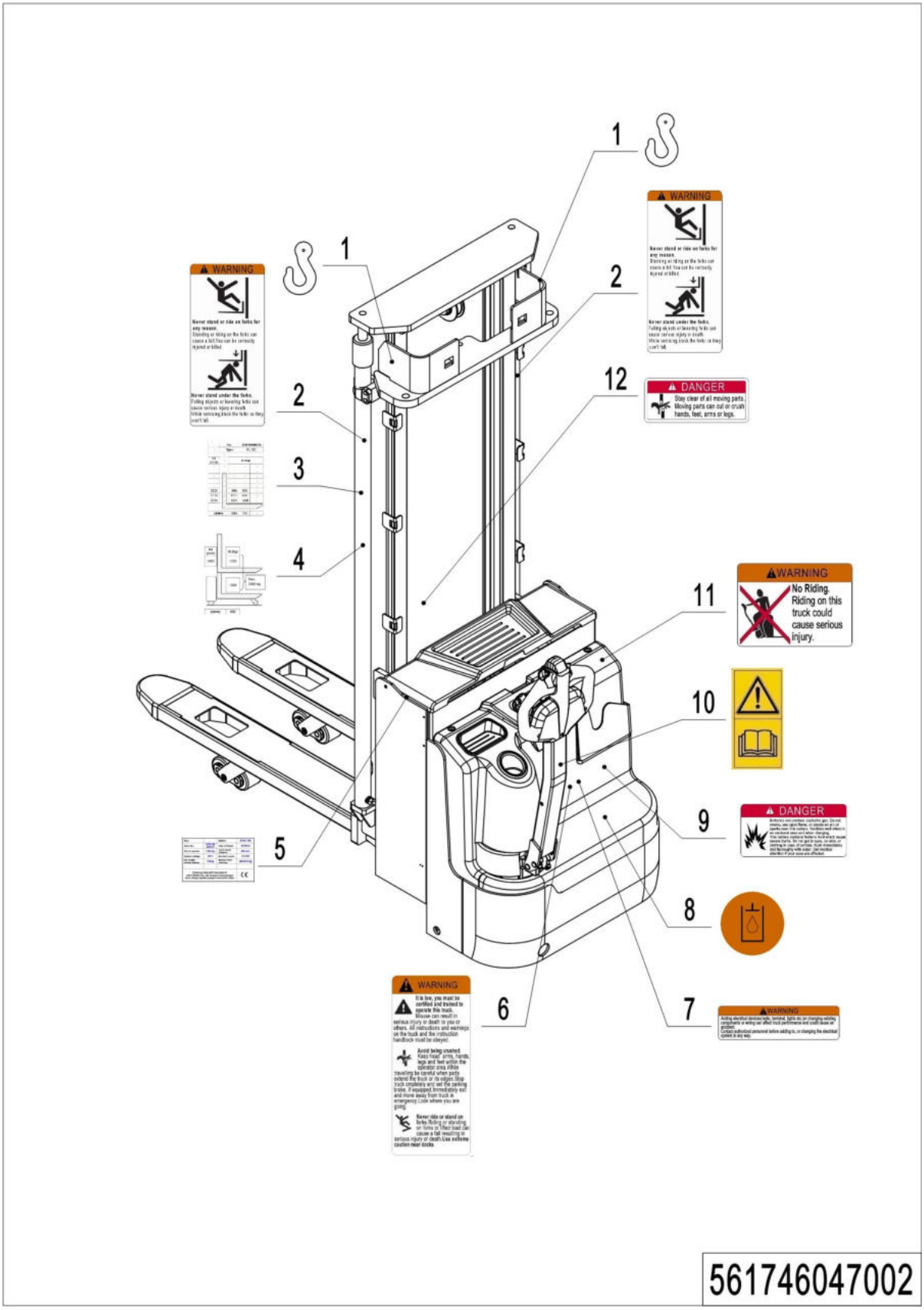

02 Label and Decal (US) (561746047002)

No.	Item Code	Mark	Item Description	Qty.	Substitute	Note
1	941200300001		Label	2		
2	941200100016		Label	2		
3	561747520001		Label	1		
4	562047520020		Load Capacity Diagram	1		
5	561747520101		Truck data plate	1		
6	941200100009		Label	1		
7	941200100010		Label	1		
8	941200300003		Label	1		
9	941200100013		Label	1		
10	941200300002		Label	1		
11	941200100011		Label	1		
12	941200100014		Label	1		

Appendix

01 Electrical Circuit Diagram (561746045501)

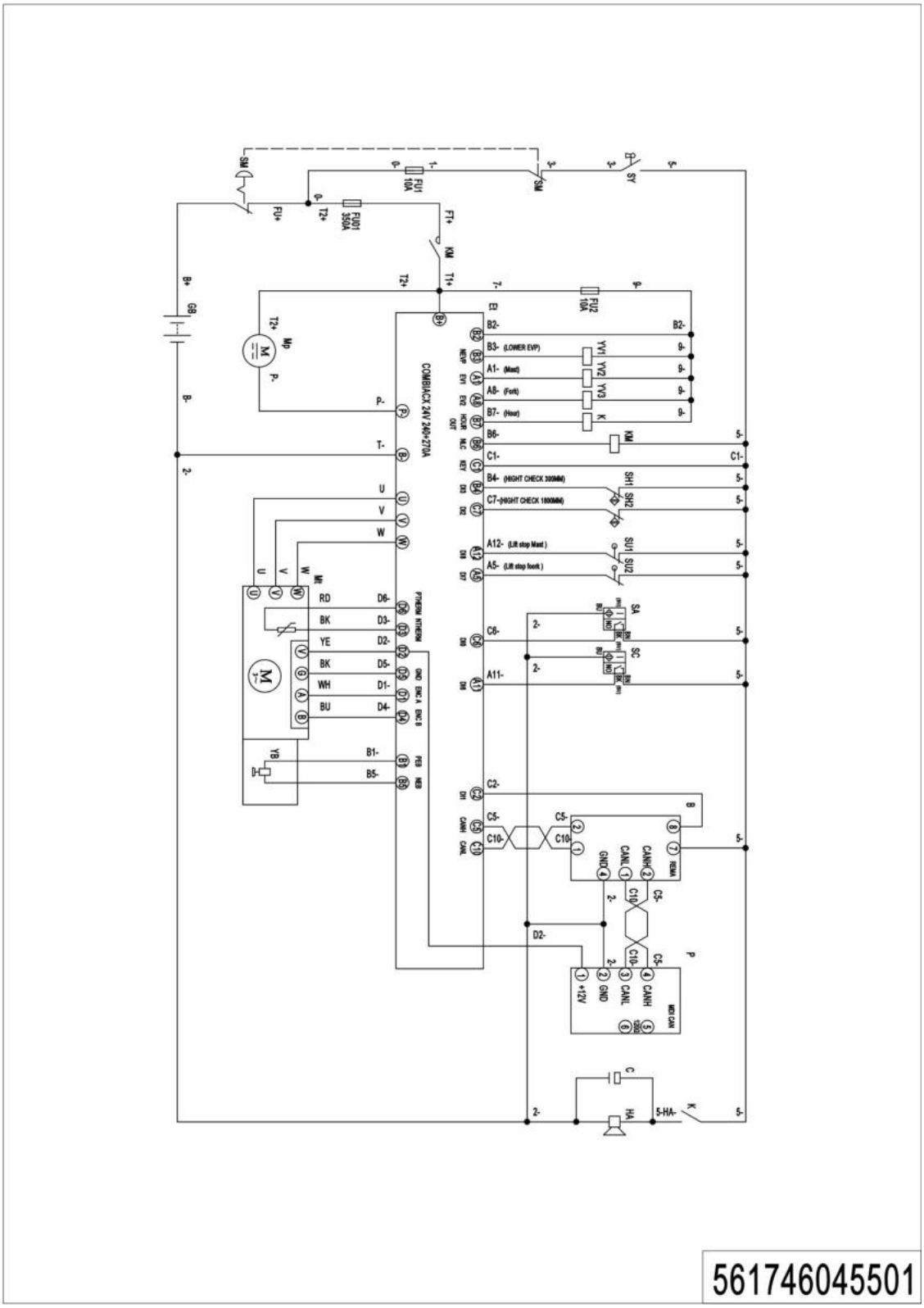

561746045501

01 Electrical Circuit Diagram (EN1175:2020) (561746045511)

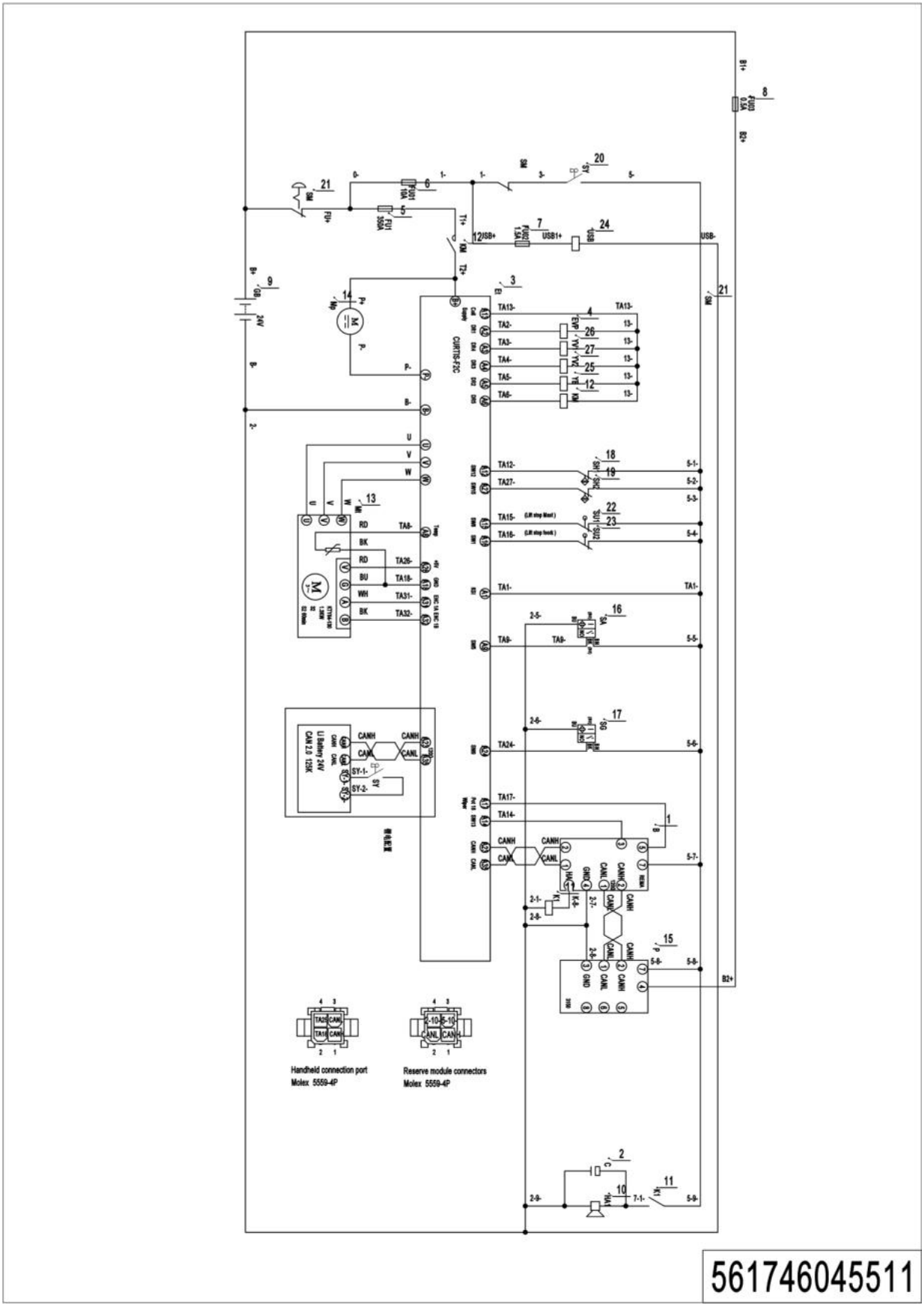

02 Hydraulic Circuit Diagram (561746045502)

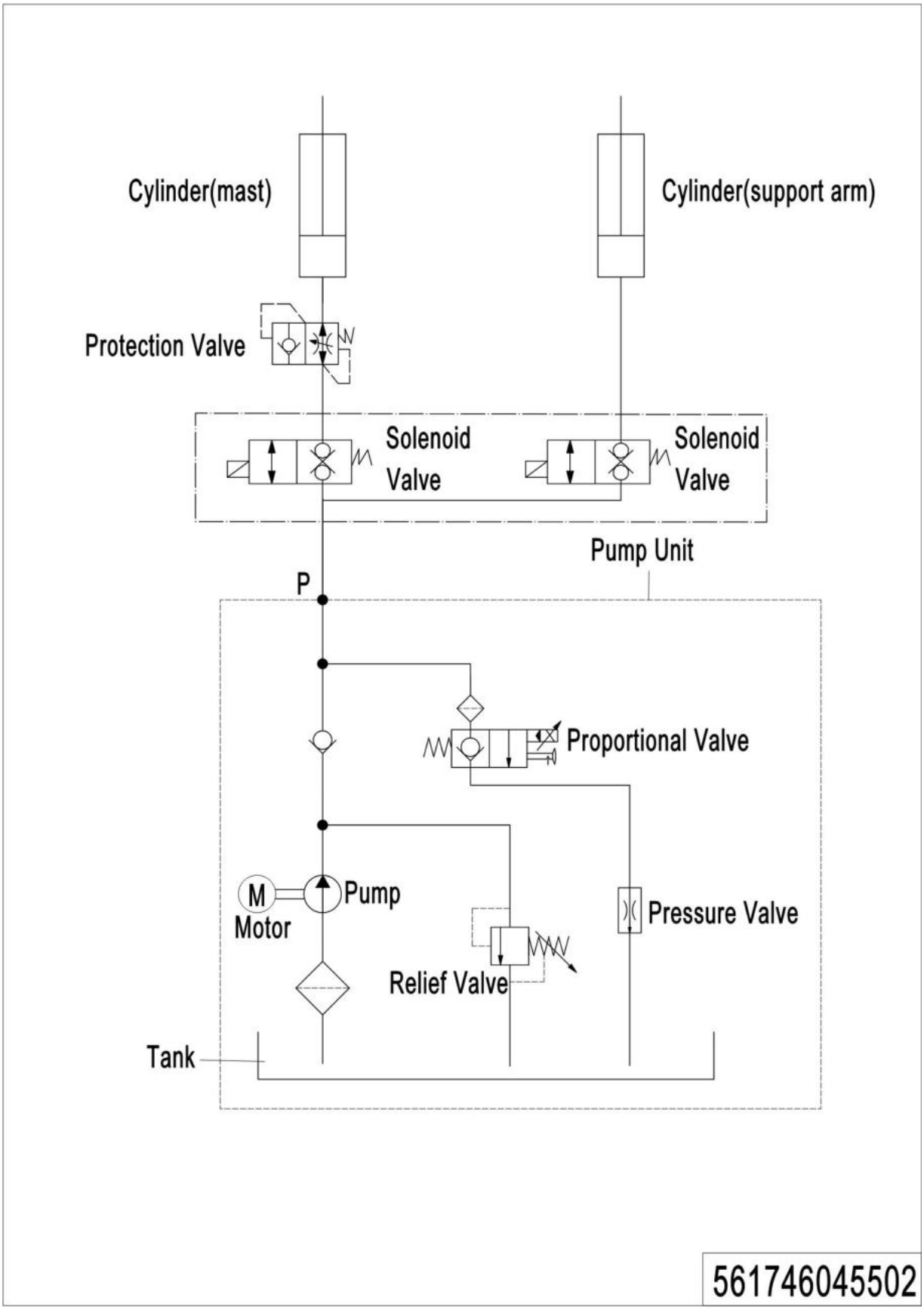

03 Consumable Parts List

No.	Item Code	Item Description	Qty.	Chapter/ Section/ Number
1	910700400004	Bearing	2	Chapter 5/04/4.03
2	910700200019	Bearing	10	Chapter 5/03/5.02 Chapter 5/04/4.08
3	940300300020	WheelΦ150x54	1	Chapter 5/04/4.07
4	534498510002	密封配件	1	Chapter 4/01/7. 01
5	940200300001	复合滚轮	8	Chapter 4/01/38 Chapter /02/35 Chapter4/03/60
6	534498510000	密封配件	2	Chapter 4/02/12. 01
7	534498510001	密封配件	1	Chapter 4/02/47. 01
8	534798510000	密封配件	2	Chapter 4/03/16. 01
9	534798510001	密封配件	1	Chapter 4/03/58. 01
10	532998510001	Wheel	4	Chapter 5/03/5
11	940300300009	WheelΦ84x70	4	Chapter 5/03/5.02
12	505633510002	Proximity Switch	1	Chapter 5/01/13
13	940400100011	Air Spring	1	Chapter 5/01/9
14	920200300001	Micro switch	1	Chapter 4/01/17Chapter 4/02/20Chapter 4/03/41
15	535933510013	Switch	1	Chapter 4/01/25Chapter 4/02/30Chapter 4/03/42
16	535933510015	Switch	1	Chapter 4/01/24Chapter 4/02/27
17	535933510021	Switch	1	Chapter 4/01/24Chapter 4/02/27Chapter 4/03/38
18	535933510025	Switch	1	Chapter 4/01/26Chapter 4/02/28Chapter 4/03/39
19	535933510005	Switch	1	Chapter 4/01/26Chapter 4/02/31Chapter 4/03/44
20	535933510020	Switch	1	Chapter 4/01/26Chapter 4/02/31Chapter 4/03/44
21	920100100013	Fuse	1	Chapter 6/02/16 Chapter 6/03/07
22	920100200002	Fuse	2	Chapter 6/03/14 Chapter 6/02/18
23	562098510001	Seal Kit	2	Chapter 2/031/23.1 Chapter 2/02/28.01

1= Supply as package. 2= Supply with constraints. 3= Phasing-out supply. 4= Supply as assembly. 5= Check other tables.