Print Number：　　Print Date：

NOBLELIFT

Scan QR Code for More

Mobile Elevating Work Platform

OPH 01E

PARTS MANUAL

568346020101

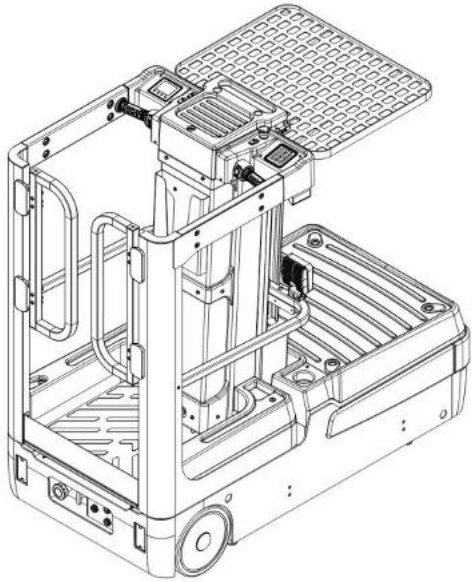

Version：V05

Truck Identification Number From：

Parts Manual

OPH 01E-PM05EN

Please order spare parts from authorized dealers of Noblelift Intelligent Equipment Co., LTD.

In order to avoid wrong delivery, all the orders for spare parts should specify the following items:

- Truck model, identification number and manufacture year.
- Orders for spare parts of mast, hydraulic transmission unit, steering axle, motor, etc. shall indicate the manufacture number of these parts.
- Codes for Noblelift spare parts are shown in the table of parts manual. Please also pay attention to the description of supply status, order quantity, etc. (check the number listed in "Mark" column of the parts manual).

"Mark" Column:

The unmarked indicates the parts are in short supply cycle.

Number 1: supply as package. Indicating these that parts are small parts and seal parts, which are supplied in package unit and in short supply cycle.

Number 2: supply with constraints. Indicating that these spare parts are not in stock and will be prepared for production after receiving the order from customers, which are in long supply cycle.

Number 3: phasing-out supply. Indicating that these parts will be replaced by new parts due to technical improvements and the current stock will not be available when these parts run out. Please check the description of technical improvements notice.

Number 4: supply as assembly. Indicating that these parts are assembly parts defined by manufacture process, which cannot be supplied as a single part.

Number 5: check other tables.

This parts manual is the property of Noblelift and can be shared under the confidential agreement only, Noblelift has the right to claim for compensation of any unauthorized use. Copy without permission is not allowed. Figures in the manual are not limited by the original design. Noblelift Intelligent Equipment Co., LTD reserves the right to improve the products for continuous technology progress.

Table of Contents

Chapter 1: Drive System 5
01 Drive Unit, Single drive (568346013501) 5
02 Drive Assembly (Single drive)(568346013001) 7
Chapter 2: Hydraulic System 9
01 Hydraulic Components, Proportional Valve (568346024001) 9
02 Hydraulic Components, Proportional Valve (568346024001) 11
03 Hydraulic Unit, Proportional Valve (568346023501) 13
04 Hydraulic Components, Storage table (568346024002) 15
05 Hydraulic Unit, Storage table (568346023502) 17
Chapter 3: Truck Frame 19
01 Truck Frame, Single drive (568346021501) 19
01 Truck Frame, Single drive (568346021501) Continuation 21
02 Truck Frame, Single drive（potentiometer）(568346021502) 23
02 Truck Frame, Single drive（potentiometer）(568346021502) Continuation 25
02 Truck Frame, Single drive（potentiometer）(568346021502) Continuation 27
03 Truck Frame, Single drive-N2 (568346021503) 29
03 Truck Frame, Single drive-N2 (568346021503) Continuation 31
04 Truck Frame, Single drive（potentiometer）-N2 (568346021504) 33
04 Truck Frame, Single drive（potentiometer）-N2 (568346021504) Continuation 35
Chapter 4: Storage device 37
01 Storage table (568346038001) 37
02 Platform (568346053501) 39
02 Platform (568346053501) Continuation 41
Chapter 5: Mast system 43
01 Mast (568346055001) 43
01 Mast (568346055001) Continuation 45
01 Mast (568346055001) Continuation 47
01 Mast (568346055001) Continuation 49
Chapter 6: Steering System, Braking System, Wheels 51
01 Tiller Unit (568346011001) 51
02 Control Handle, Left (568346011002) 53
03 Control Handle, right (568346011003) 55
03 Control Handle, right (568346011003) Continuation 57
04 rear wheel,PU(568346013001) 59
05 rear wheel, rubber (568346013002) 61
06 Caster (568346016501) 63
Chapter 7: Electrical Parts 65
01 Display Assembly (568346010001) 65
02 Working light (568346034501) 67
03 Working light-N2 (568346034502) 69
04 floodlight (568346035001) 71
05 Charger (568346036501) 73

06 Traction battery (568346037001).....75
07 Traction battery-N2 (568346037002) 77
08 Controller，F2C+1220E (568346033001).....79
09 Charger，(568346033002).....81
10 Wire Harness，F2A +1220E (568346033003).....83
11 Wire Harness，F2A +1220E +Li (568346033004) 85
Chapter 8: Others.....87
01 Labels (568346047001) 87
Appendix.....89
01 Hydraulic Circuit Diagram (568346045501).....89
02 Hydraulic Circuit Diagram (568346045502).....90
03 Hydraulic Circuit Diagram (568346045503).....91
04 Electrical Circuit Diagram，F2C +1220E (568346045504) 92
05 Electrical Circuit Diagram，F2C +1220E+Li (568346045505) 93
06 Electrical Circuit Diagram，F2C +1220E (568346045506) （potentiometer） 94
07 Electrical Circuit Diagram，F2C+1220E+Li (568346045507) （potentiometer） 95
08 Consumable Parts List 96

Chapter 1: Drive System

01 Drive Unit, Single drive (568346013501)

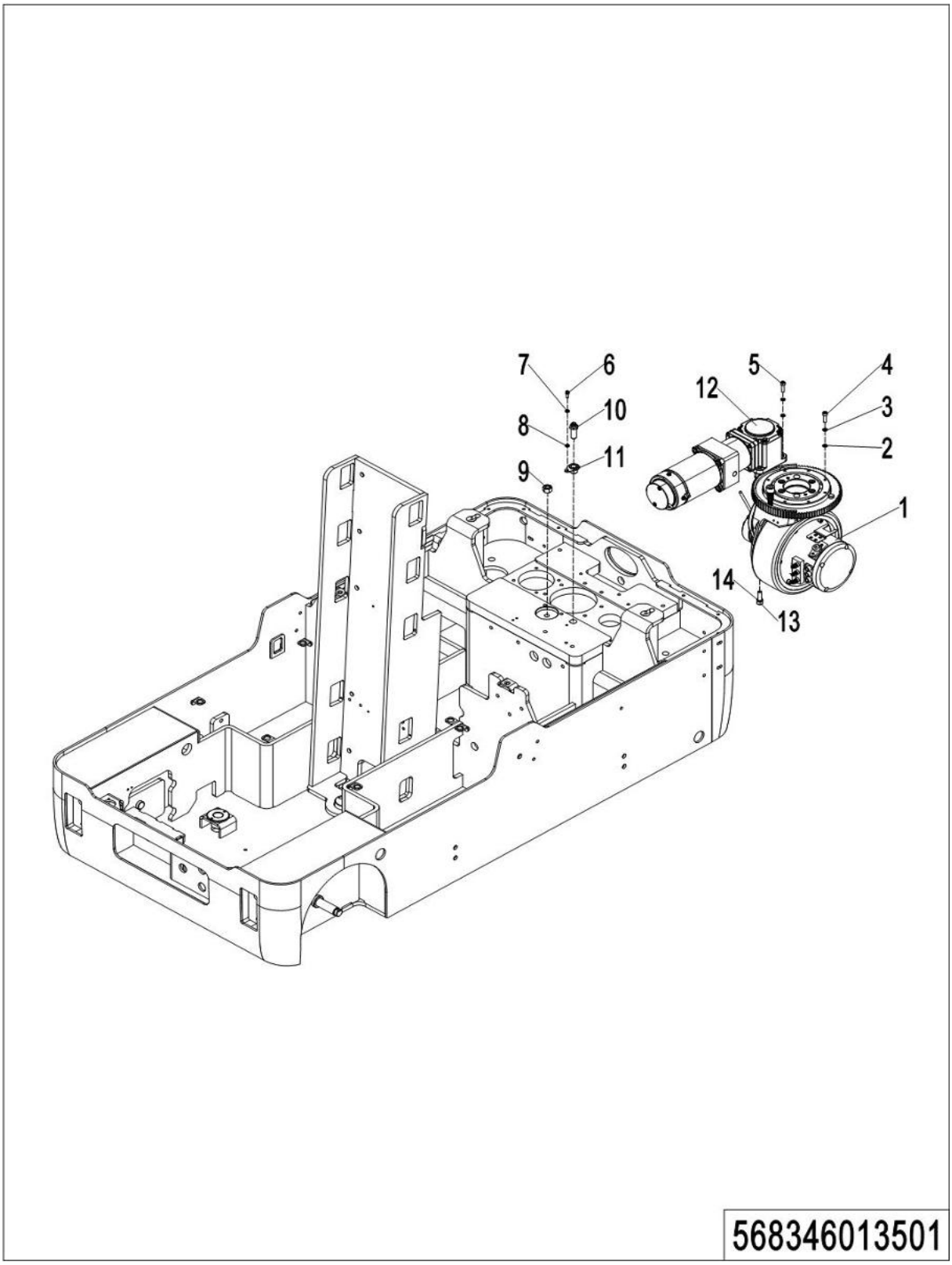

01 Drive Unit, Single drive (568346013501)

No.	Item Code	Mark	Item Description	Qty.	Substitute	Note
1	940900500024		Steering Unit	1		
2	910400100005		Flat Washer	12		
3	910400500005		Spring Washer	12		
4	910200200040		Screw	8		
5	910200200039		Screw	4		
6	910200200015		Screw	1		
7	910400500003		Spring Washer	1		
8	910400100003		Flat Washer	1		
9	910300100008		Nut	1		
10	505733510001		Proximity Switch	1		
11	533213510005		Bushing	1		
12	940900700005		Motor	1		
13	910200200147		Screw	1		
14	910400500019		Spring Washer	1		

02 Drive Assembly (Single drive)(568346013001)

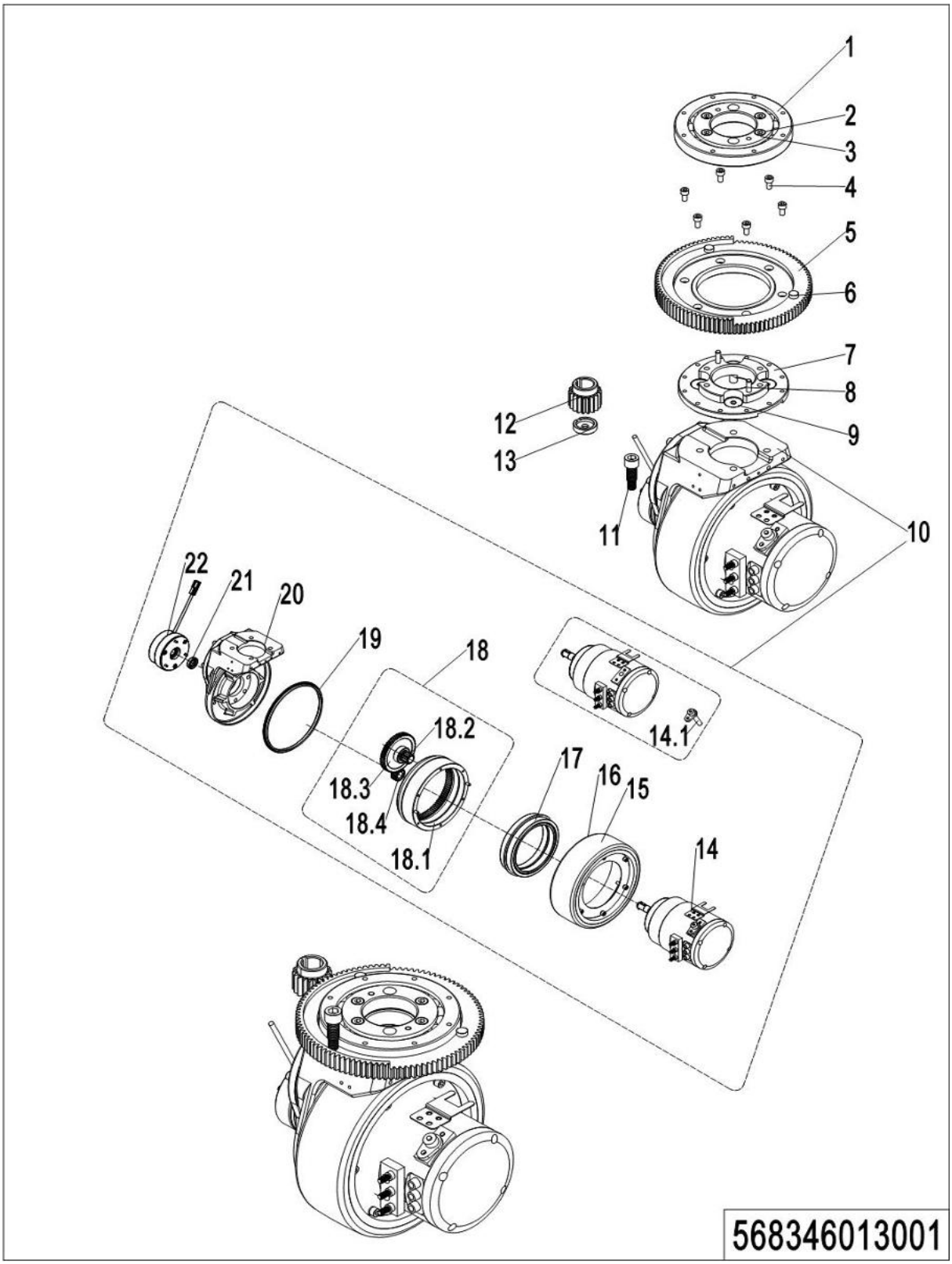

02 Drive Assembly (Single drive)(568346013001)

No.	Item Code	Mark	Item Description	Qty.	Substitute	Note
1	961001100003		Slewing Bearing	1		
2	910200200147		Screw	4		
3	910400500019		Spring Washer	4		
4	910200200179		Screw	6		
5	961001100002		Gear	1		
6	961001100006		Locating Pin	2		
7	961002600001		Bracket	1		
8	910600400038		Spring Pin	2		
9	910200400045		Screw	4		
10	961001600000		Drive Unit	1		
11	961001100008		Screw	1		
12	961001100007		Gear	1		
13	961003000001		Check Ring	1		
14	961001600001		Motor 0.65KW	1		
14.1	961001600002		Encoder	1		
15	961001300010		Wheel	1		
16	910200200140		Screw	6		
17	910700200044		Bearing	2		
18	508098510025		Gear Components	1		
18.1	961001300008		Gear	1		
18.2	961001300005		Gear Shaft	1		
18.3	961001300002		Big Gear	1		
18.4	961000700006		Small Gear	1		
19	961001300007		OTC Seal	1		
20	508098510027		Gearbox	1		
21	961000700012		Oil Seal	1		
22	961002200004		Brake	1		

Chapter 2: Hydraulic System

01 Hydraulic Components, Proportional Valve (568346024001)

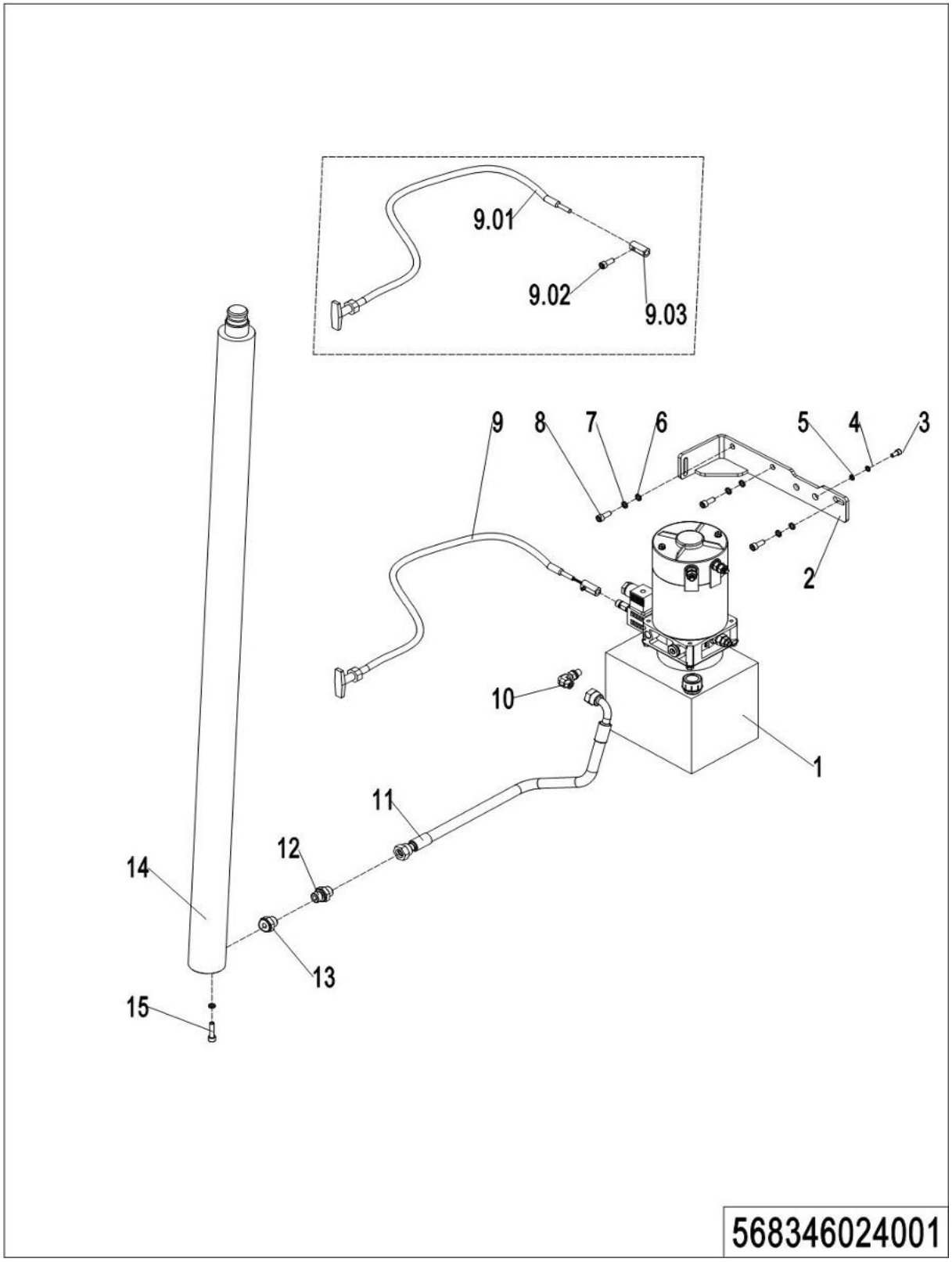

01 Hydraulic Components, Proportional Valve (568346024001)

No.	Item Code	Mark	Item Description	Qty.	Substitute	Note
1	950900100094		Pump Unite	1		
2	568324010004		Mounting Plate	1		
3	910200200075		Screw	2		
4	910400500007		Spring Washer	2		
5	910400100007		Flat Washer	2		
6	910400100006		Flat Washer	5		
7	910400500006		Spring Washer	5		
8	910200200055		Screw	3		
9	568324010000		Anchor Assembly	1		
9.01	568324020001		Stay wire	1		
9.02	910200300011		Screw	1		
9.03	568324020002		Barrel	1		
10	950401100003		Joint	1		
11	213025520307		Hose	1		
12	950400400003		Joint	1		
13	950600300001		Safety Valve	1		
14	568324010001		Cylinder	1		
14.01	568398520084		Seal Kit	1		
15	910200200058		Screw	2		

02 Hydraulic Components, Proportional Valve (568346024001)

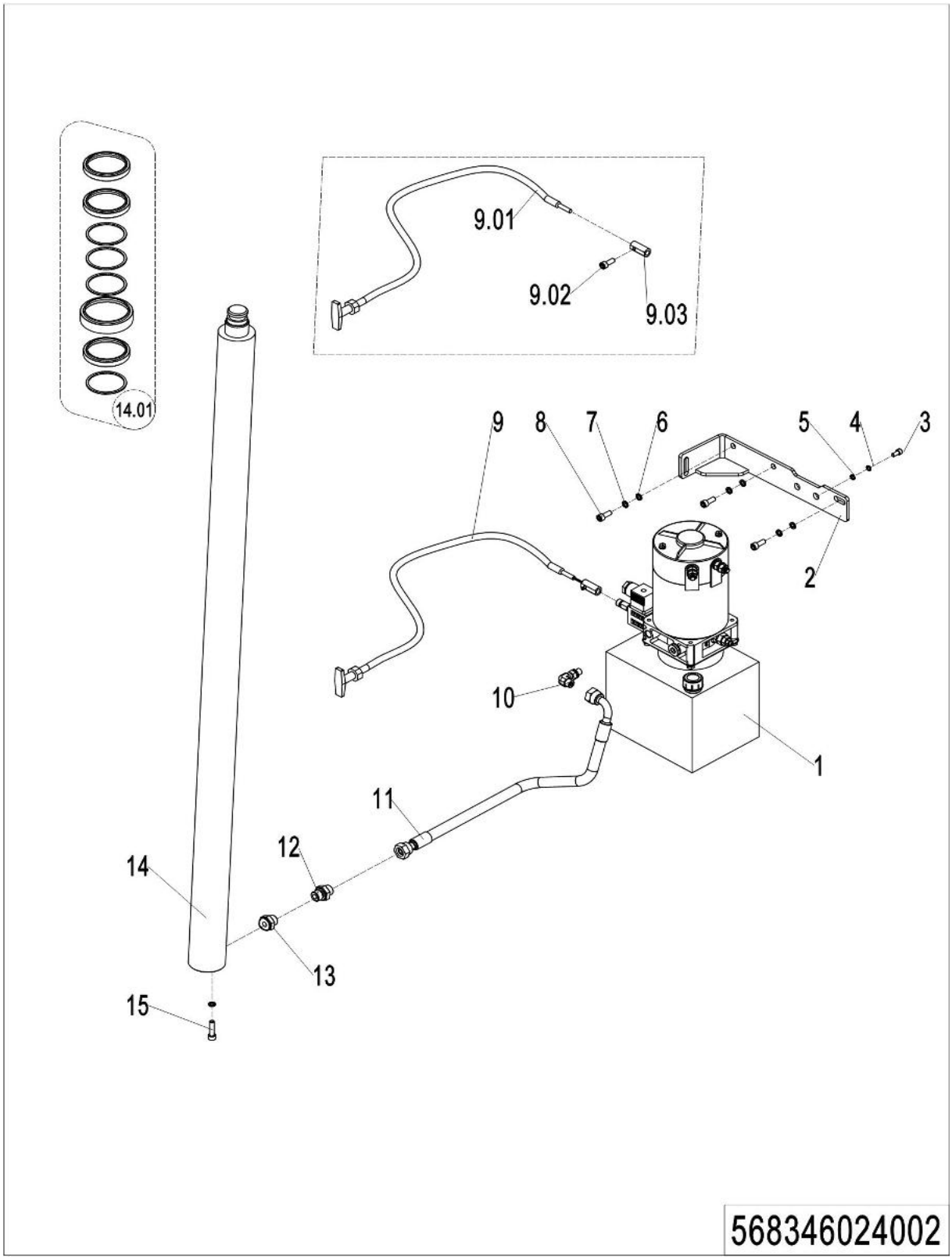

02 Hydraulic Components, Proportional Valve (568346024002)

No.	Item Code	Mark	Item Description	Qty.	Substitute	Note
1	950900100094		Pump Unite	1		
2	568324010008		Mounting Plate	1		
3	910200200075		Screw	2		
4	910400500007		Spring Washer	2		
5	910400100007		Flat Washer	2		
6	910400100006		Flat Washer	5		
7	910400500006		Spring Washer	5		
8	910200200055		Screw	3		
9	568324010000		Anchor Assembly	1		
9.01	568324020001		Stay wire	1		
9.02	910200300011		Screw	1		
9.03	568324020002		Barrel	1		
10	950401100003		Joint	1		
11	213025520307		Hose	1		
12	950400400003		Joint	1		
13	950600300001		Safety Valve	1		
14	568324010007		Cylinder	1		
14.01	568398520084		Seal Kit	1		
15	910200200058		Screw	2		

03 Hydraulic Unit, Proportional Valve (568346023501)

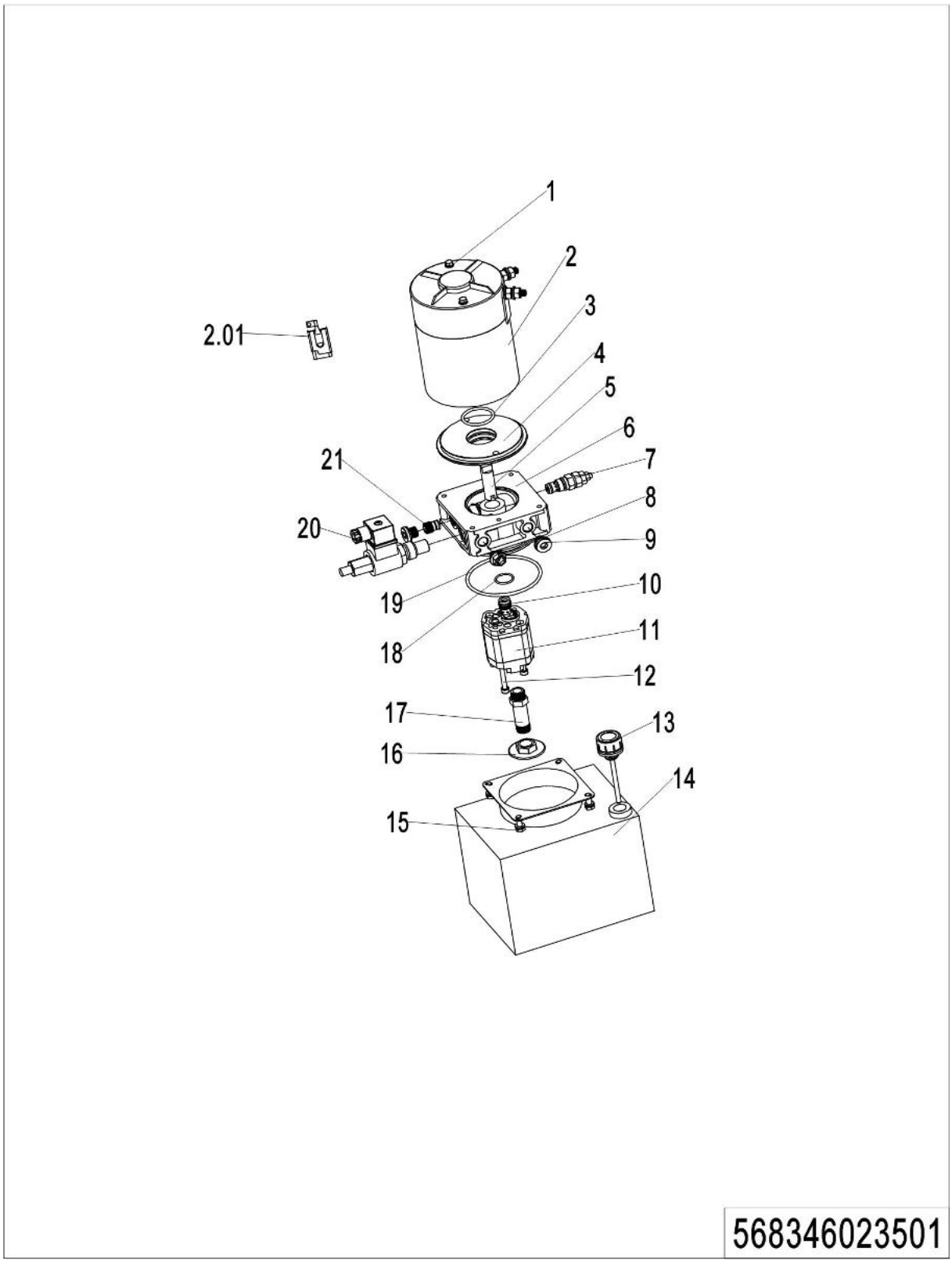

03 Hydraulic Unit, Proportional Valve (568346023501)

No.	Item Code	Mark	Item Description	Qty.	Substitute	Note
1	568398520001		Bolt	2		
2	568398520002		Motor	1		
2.01	568398520086		Carbon Brush	1		
3	568398520003		O-Ring	1		
4	568398520004		Flange	1		
5	568398520005		Coupling	1		
6	568398520006		Valve Block	1		
7	568398520007		Overflow Valve	1		
8	568398520008		End Cap	1		
9	568398520009		Valve Plate	2		
10	568398520010		Valve	1		
11	568398520011		Gear Pump	1		
12	568398520012		Screw	2		
13	568398520013		Cap-Tank	2		
14	568398520014		Tank	1		
15	568398520015		Screw	4		
16	568398520016		Filter	1		
17	568398520017		Oil Tube	1		
18	568398520018		O-Ring	1		
19	568398520019		O-Ring	1		
20	568398520020		Magnetic Valve	1		
21	568398520021		Check Valve	1		

04 Hydraulic Components, Storage table (568346024002)

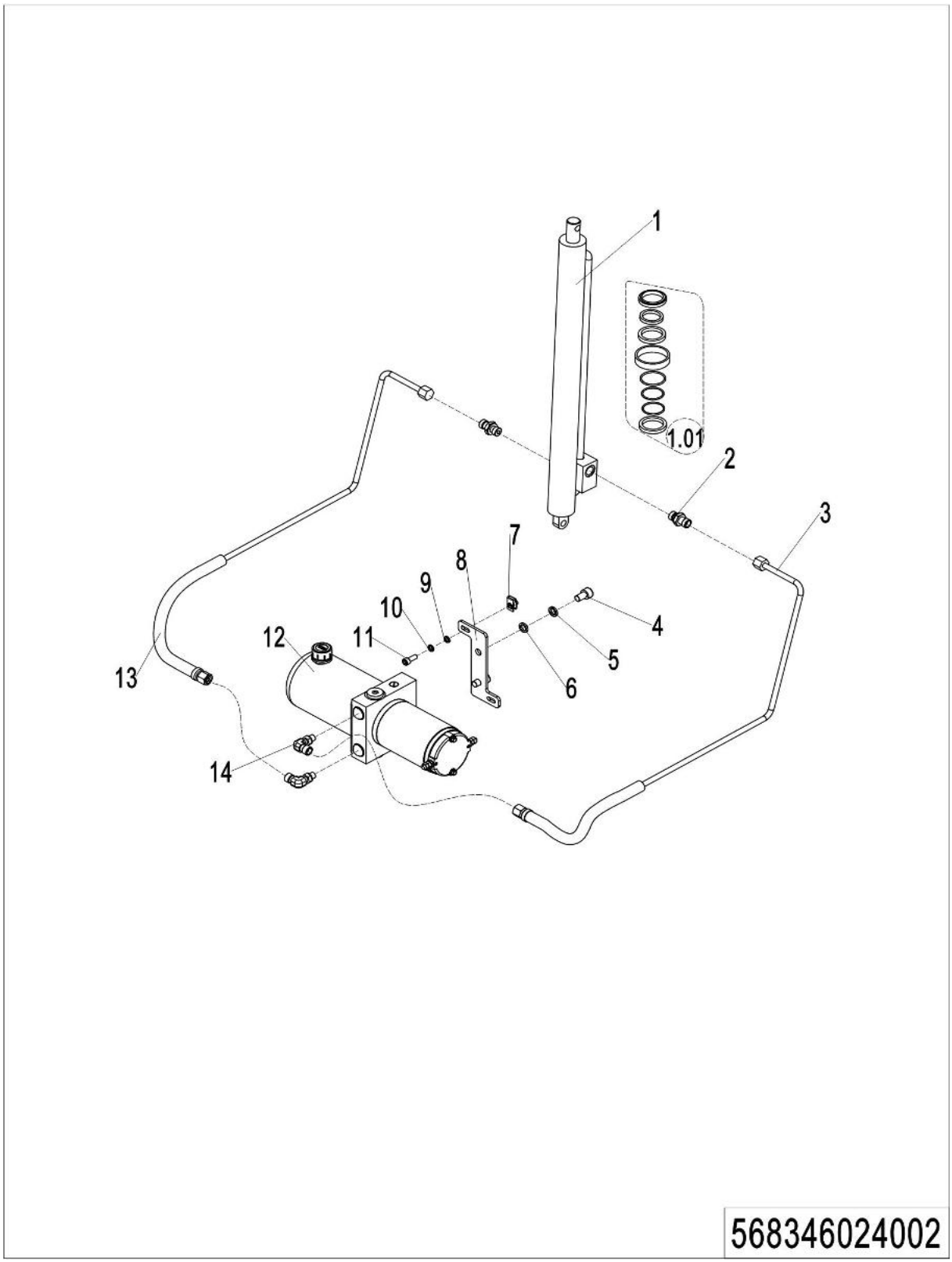

04 Hydraulic Components, Storage table (568346024002)

No.	Item Code	Mark	Item Description	Qty.	Substitute	Note
1	568324010006		Cylinder	1		
1.01	568398520085		Seal Kit	1		
2	950400400001		Joint	2		
3	568324010003		Chain	1		
4	910200200075		Screw	2		
5	910400500007		Spring Washer	2		
6	910400100007		Flat Washer	2		
7	940400400001		Cage Nut	2		
8	568324020005		Mounting Plate	1		
9	910400100005		Flat Washer	2		
10	910400500005		Spring Washer	2		
11	910200200035		Screw	2		
12	950900100085		Pump Unit	1		
13	568324010002		Chain	1		
14	950401100002		Joint	2		

05 Hydraulic Unit, Storage table (568346023502)

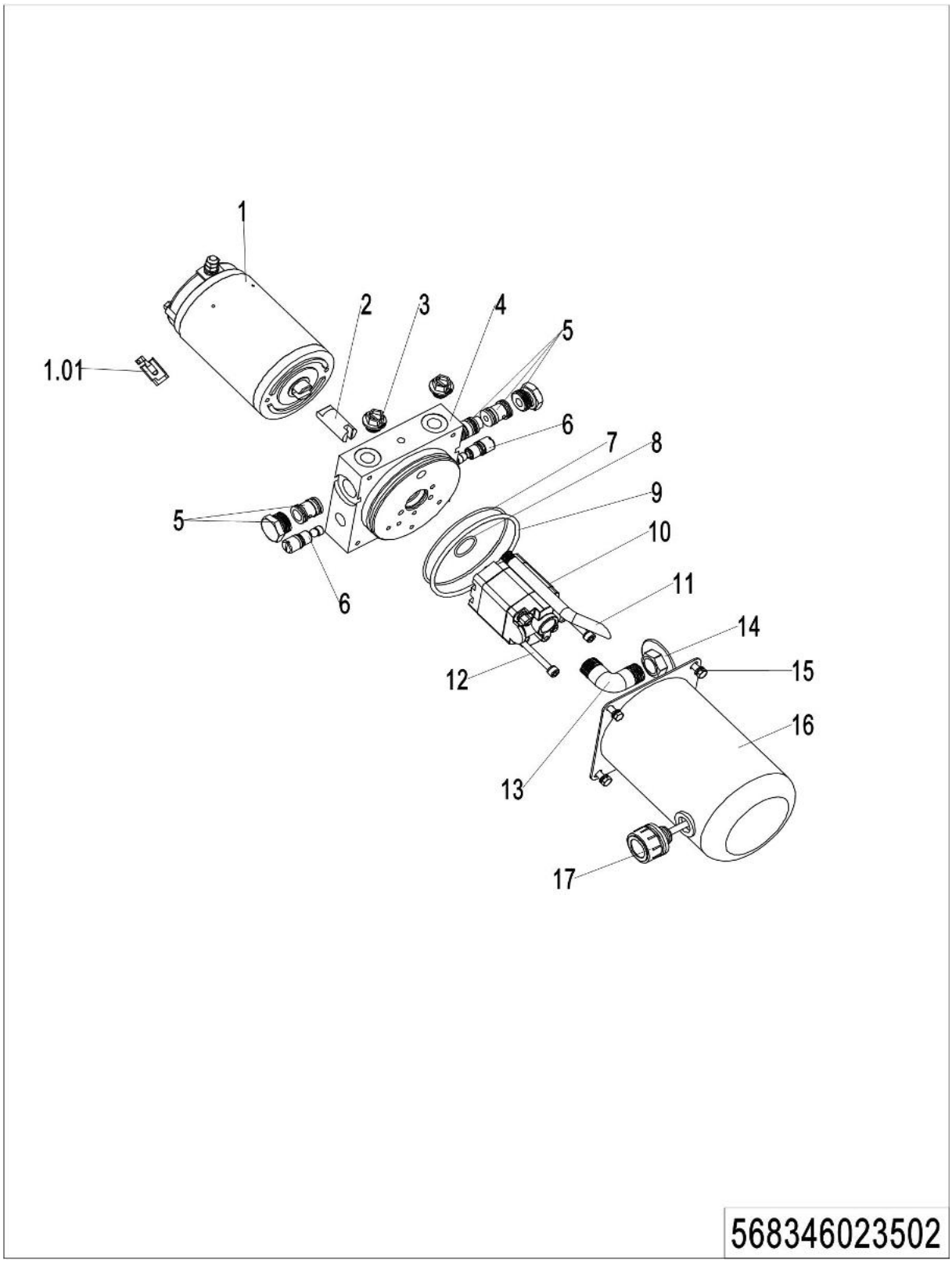

05 Hydraulic Unit, Storage table (568346023502)

No.	Item Code	Mark	Item Description	Qty.	Substitute	Note
1	568398520022		Motor	1		
1.01	568398520087		Carbon Brush	1		
2	568398520023		Coupling	1		
3	568398520008		Valve Plate	2		
4	568398520024		Valve Block	1		
5	568398520025		Check Valve	1		
6	568398520026		Overflow Valve	2		
7	568398520027		O-Ring	1		
8	568398520018		O-Ring	1		
9	568398520019		O-Ring	1		
10	568398520028		Gear Pump	1		
11	568398520029		Pipe	1		
12	568398520030		Screw	2		
13	568398520031		Oil Tube	1		
14	568398520016		Filter	1		
15	568398520015		Bolt	4		
16	568398520032		Tank	1		
17	568398520013		Cap-Tank	1		

Chapter 3: Truck Frame

01 Truck Frame, Single drive (568346021501)

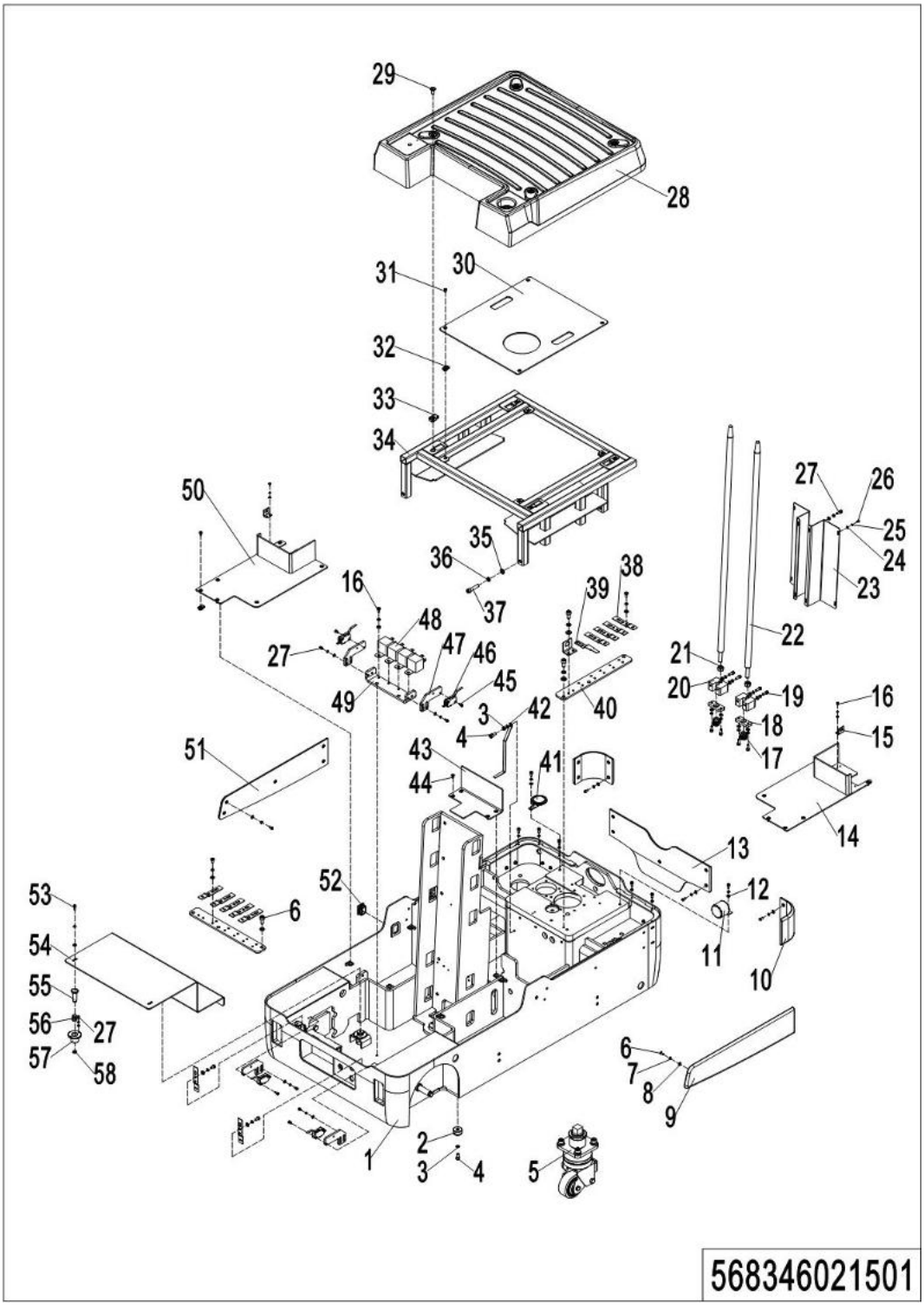

01 Truck Frame, Single drive (568346021501)

No.	Item Code	Mark	Item Description	Qty.	Substitute	Note
1	568321510003		Chassis	1		
2	568321520043		Mounting Base	4		
3	910200200055		Screw	7		
4	910400500006		Spring Washer	7		
5	568316510000		Caster	2		
6	910200200033		Screw	35		
7	910400500005		Spring Washer	47		
8	910400100005		Flat Washer	37		
9	568321520079		Bumper Rail	1		
10	568321520078		Bumper Rail	2		
11	568333010027		buzzer	1		
12	910400100006		Flat Washer	3		
13	568321520077		Bumper Rail	1		
14	568321510005		Close Plate	1		
15	921300300003		Holder	3		
16	910200500034		Screw	32		
17	568355020052		Water Joint	2		
18	568321520094		Mounting Plate	2		
19	910200200146		Screw	8		
20	568321520095		Mounting Base	2		
21	910300100008		Nut	2		
22	568321520096		Guide Rail	2		
23	568321520080		Bracket	2		
24	910400100003		Flat Washer	56		
25	910400500003		Spring Washer	56		
26	910200300005		Screw	4		
27	910200200015		Screw	20		
28	568321520042		Rod	1		
29	941100100007		Screw	4		
30	568321520069		Subplate	1		

01 Truck Frame, Single drive (568346021501) Continuation

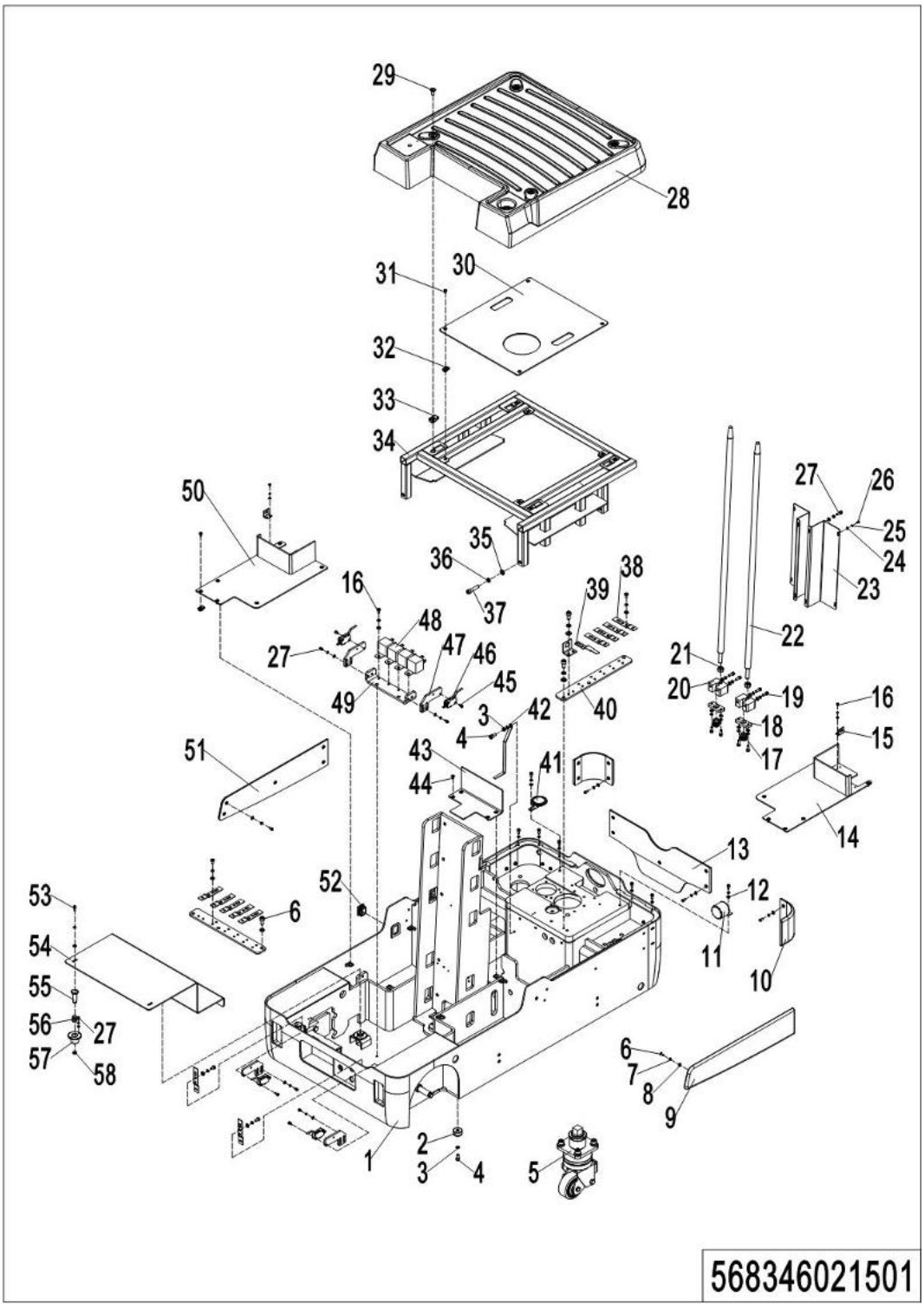

01 Truck Frame, Single drive (568346021501) Continuation

No.	Item Code	Mark	Item Description	Qty.	Substitute	Note
31	910200400017		Screw	4		
32	940400400001		Cage Nut	20		
33	940400400003		Cage Nut	4		
34	568321510002		Bracket	1		
34	568321510008		Bracket	1		Li
34	568321510013		Bracket	1		Li 24v100Ah
35	910400100007		Flat Washer	4		
36	910400500007		Spring Washer	4		
37	910200200080		Screw	4		
38	921300300005		Holder	12		
39	921300300010		Connector Holder	1		
40	568321520074		Mounting Plate	2		
41	920500100001		Button	1		
42	602021520074		Electrostatic tape	1		
43	568321520041		Close Plate	1		
44	910200400018		Screw	16		
45	910200500012		Screw	4		
46	920200300012		Micro switch	4		
47	568321520075		Mounting Plate	4		
48	920800100011		Relay	4		
49	568321520091		Mounting Plate	1		
50	568321510006		Close Plate	1		
51	568321520085		Bumper Rail	1		
52	506621520022		Dust Cap	1		
53	910200300017		Screw	4		
54	568321520039		Close Plate	1		
55	568321520076		Pin	4		
56	940400500002		Spring	4		
57	568321520088		Stop Sleeve	4		
58	910401300006		Circlip	4		

02 Truck Frame, Single drive（potentiometer）(568346021502)

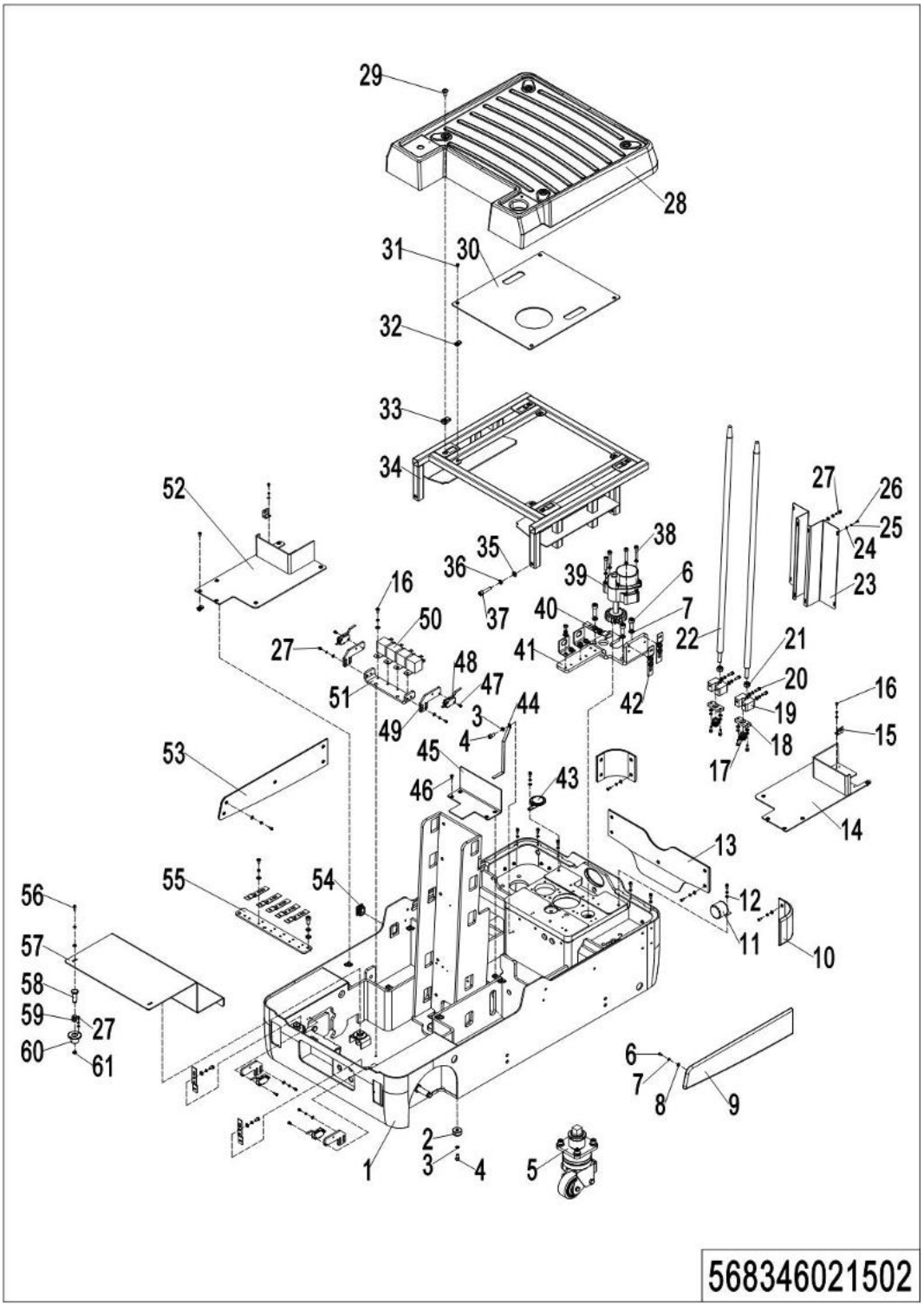

02 Truck Frame, Single drive（potentiometer）(568346021502)

No.	Item Code	Mark	Item Description	Qty.	Substitute	Note
1	568321510012		Chassis	1		
2	568321520043		Mounting Base	4		
3	910200200055		Screw	7		
4	910400500006		Spring Washer	7		
5	568316510000		Caster	2		
6	910200200033		Screw	36		
7	910400500005		Spring Washer	48		
8	910400100005		Flat Washer	37		
9	568321520079		Bumper Rail	1		
10	568321520078		Bumper Rail	2		
11	568333010027		buzzer	1		
12	910400100006		Flat Washer	3		
13	568321520077		Bumper Rail	1		
14	568321510005		Close Plate	1		
15	921300300003		Holder	4		
16	910200500034		Screw	32		
17	568355020052		Water Joint	2		
18	568321520094		Mounting Plate	2		
19	568321520095		Mounting Base	2		
20	910200200146		Screw	8		
21	910300100008		Nut	2		
22	568321520096		Guide Rail	2		
23	568321520080		Bracket	2		
24	910400100003		Flat Washer	56		
25	910400500003		Spring Washer	56		
26	910200300005		Screw	4		
27	910200200015		Screw	20		
28	568321520042		Rod	1		
29	941100100007		Screw	4		
30	568321520069		Subplate	1		

02 Truck Frame, Single drive（potentiometer）(568346021502) Continuation

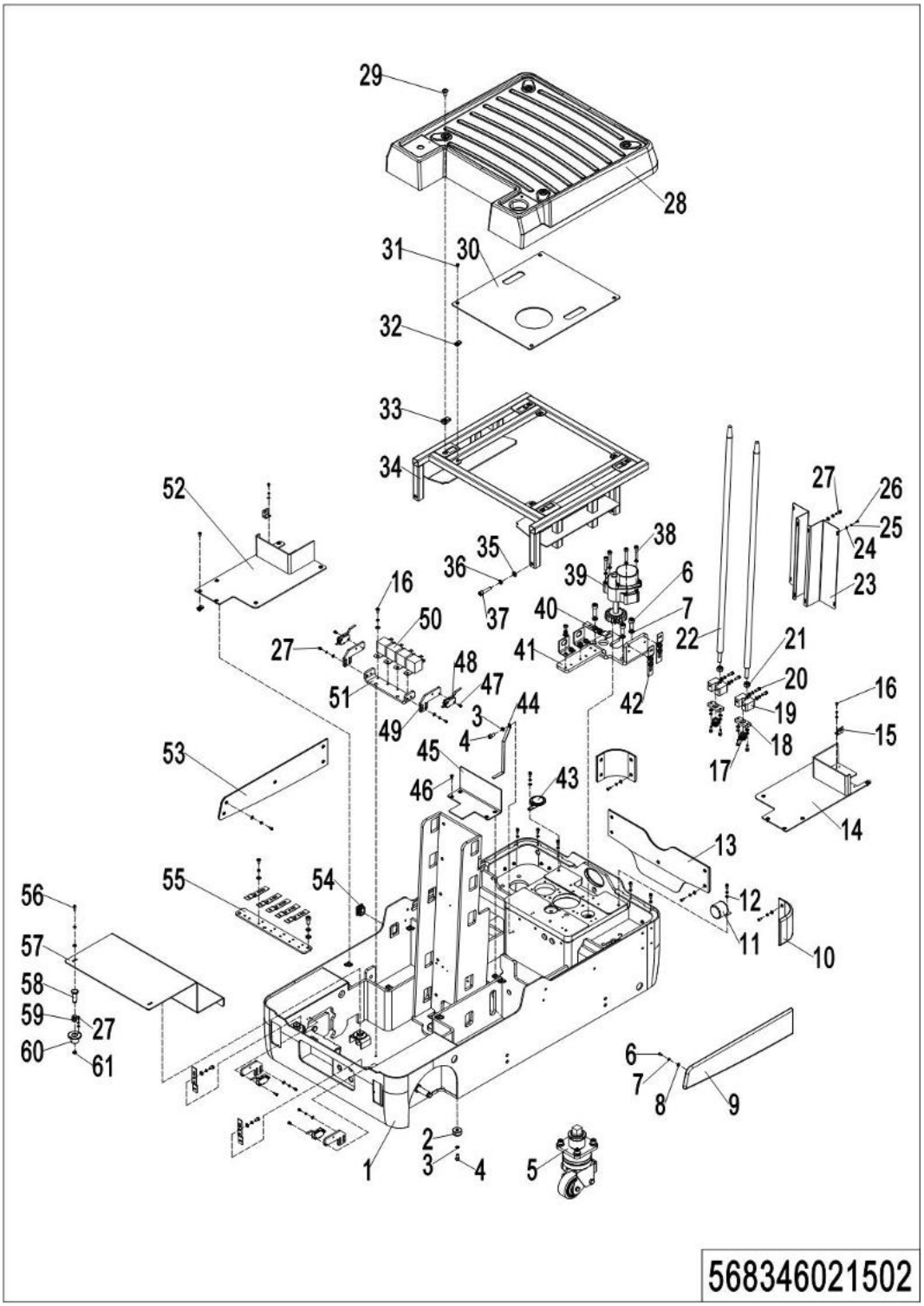

02 Truck Frame, Single drive（potentiometer）(568346021502) Continuation

No.	Item Code	Mark	Item Description	Qty.	Substitute	Note
31	910200400017		Screw	4		
32	940400400001		Cage Nut	20		
33	940400400003		Cage Nut	4		
34	568321510002		Bracket	1		
34	568321510008		Bracket	1		Li
34	568321510013		Bracket	1		Li 24V100Ah
35	910400100007		Flat Washer	4		
36	910400500007		Spring Washer	4		
37	910200200080		Screw	4		
38	910200200017		Screw	4		
39	921800100057		Position sensor	1		
40	921300300010		Connector Holder	1		
41	568321520098		Mounting Plate	1		
42	921300300005		Holder	12		
43	920500100001		Button	1		
44	602021520074		Electrostatic tape	1		
45	568321520041		Close Plate	1		
46	910200400018		Screw	16		
47	910200500012		Screw	4		
48	920200300012		Micro switch	4		
49	568321520075		Mounting Plate	4		
50	920800100011		Relay	4		
51	568321520091		Mounting Plate	1		
52	568321510006		Close Plate	1		
53	568321520085		Bumper Rail	1		
54	506621520022		Dust Cap	1		
55	568321520074		Mounting Plate	1		
56	910200300017		Screw	4		
57	568321520039		Close Plate	1		
58	568321520076		Pin	4		

02 Truck Frame, Single drive（potentiometer）(568346021502) Continuation

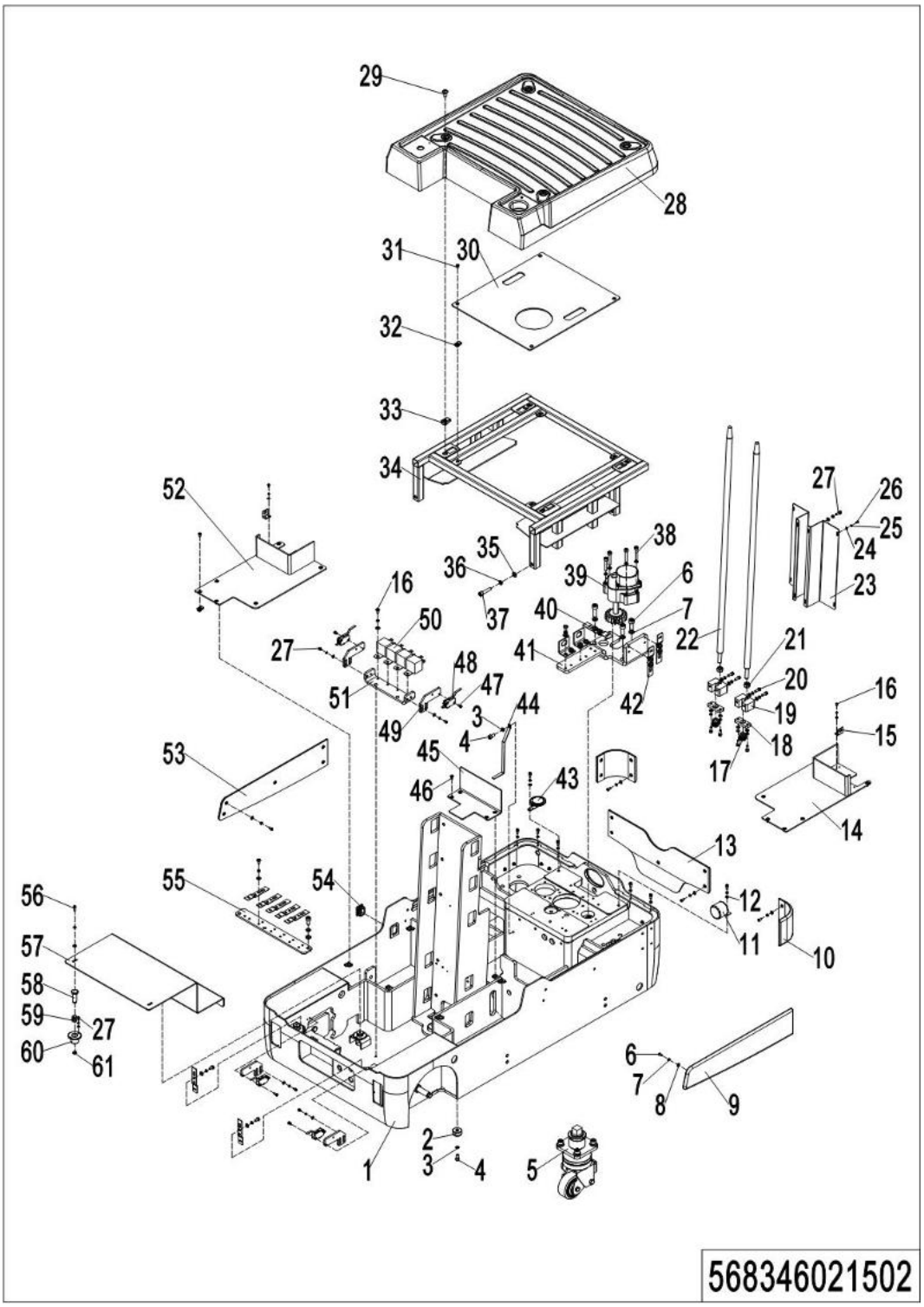

02 Truck Frame, Single drive（potentiometer）(568346021502) Continuation

No.	Item Code	Mark	Item Description	Qty.	Substitute	Note
59	940400500002		Spring	4		
60	568321520088		Stop Sleeve	4		
61	910401300006		Circlip	4		

03 Truck Frame, Single drive-N2 (568346021503)

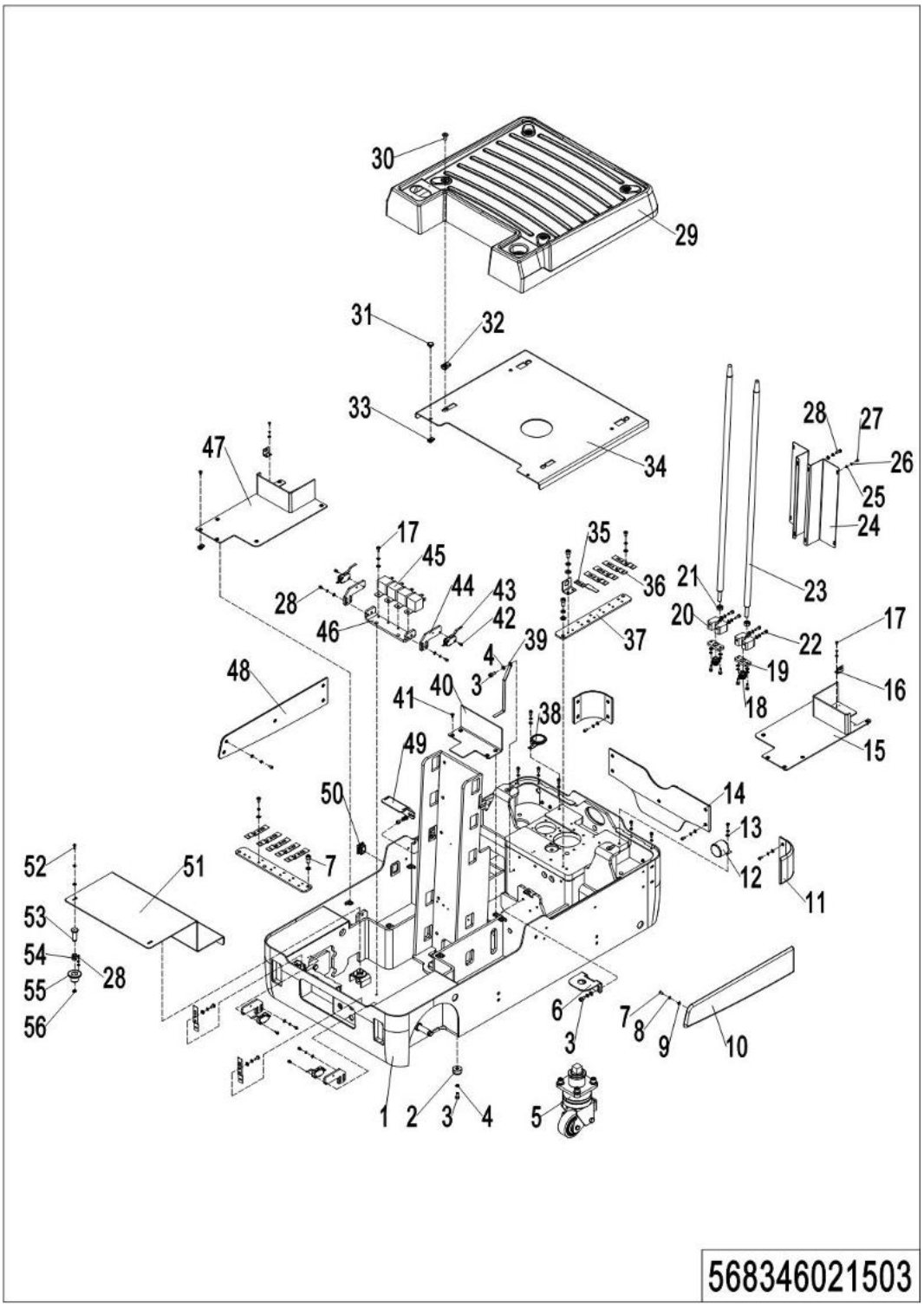

03 Truck Frame, Single drive-N2 (568346021503)

No.	Item Code	Mark	Item Description	Qty.	Substitute	Note
1	568321510016		Chassis	1		
2	568321520043		Mounting Base	4		
3	910200200055		Screw	11		
4	910400500006		Spring Washer	11		
5	568316510000		Caster	2		
6	568321520101		Baseboard	1		
7	910200200033		Screw	35		
8	910400500005		Spring Washer	47		
9	910400100005		Flat Washer	37		
10	568321520079		Bumper Rail	1		
11	568321520078		Bumper Rail	2		
12	568333010027		buzzer	1		
13	910400100006		Flat Washer	7		
14	568321520077		Bumper Rail	1		
15	568321510005		Close Plate	1		
16	921300300003		Holder	3		
17	910200500034		Screw	32		
18	568355020052		Water Joint	2		
19	568321520094		Mounting Plate	2		
20	568321520095		Mounting Base	2		
21	910300100008		Nut	2		
22	910200200146		Screw	8		
23	568321520096		Guide Rail	2		
24	568321520080		Bracket	2		
25	910400100003		Flat Washer	56		
26	910400500003		Spring Washer	56		
27	910200300005		Screw	4		
28	910200200015		Screw	20		
29	568321520100		Plate	1		
30	941100100007		Screw	4		

03 Truck Frame, Single drive-N2 (568346021503) Continuation

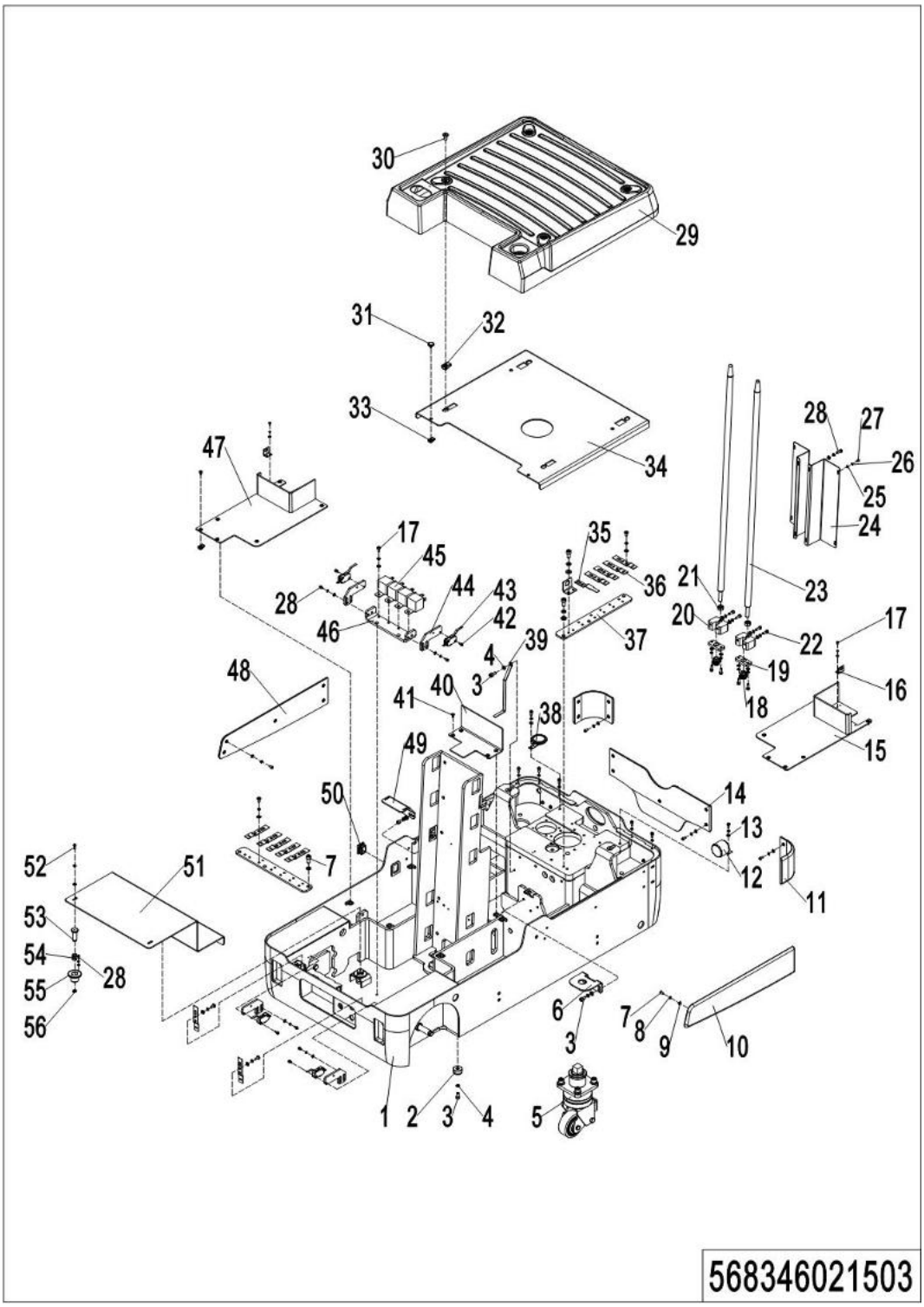

03 Truck Frame, Single drive-N2 (568346021503) Continuation

No.	Item Code	Mark	Item Description	Qty.	Substitute	Note
31	910203400001		Screw	2		
32	940400400003		Cage Nut	4		
33	940400400001		Cage Nut	18		
34	568321510015		Bracket	1		
35	921300300010		Connector Holder	1		
36	921300300005		Holder	12		
37	568321520074		Mounting Plate	2		
38	920500100001		Button	1		
39	602021520074		Electrostatic tape	1		
40	568321520041		Close Plate	1		
41	910200400018		Screw	16		
42	910200500012		Screw	4		
43	920200300012		Micro switch	4		
44	568321520075		Mounting Plate	4		
45	920800100011		Relay	4		
46	568321520091		Mounting Plate	1		
47	568321510006		Close Plate	1		
48	568321520085		Bumper Rail	1		
49	568321520112		Baseboard	1		
50	506621520022		Dust Cap	1		
51	568321520039		Close Plate	1		
52	910200300017		Screw	4		
53	568321520076		Pin	4		
54	940400500002		Spring	4		
55	568321520088		Stop Sleeve	4		
56	910401300006		Circlip	4		

04 Truck Frame, Single drive（potentiometer）-N2 (568346021504)

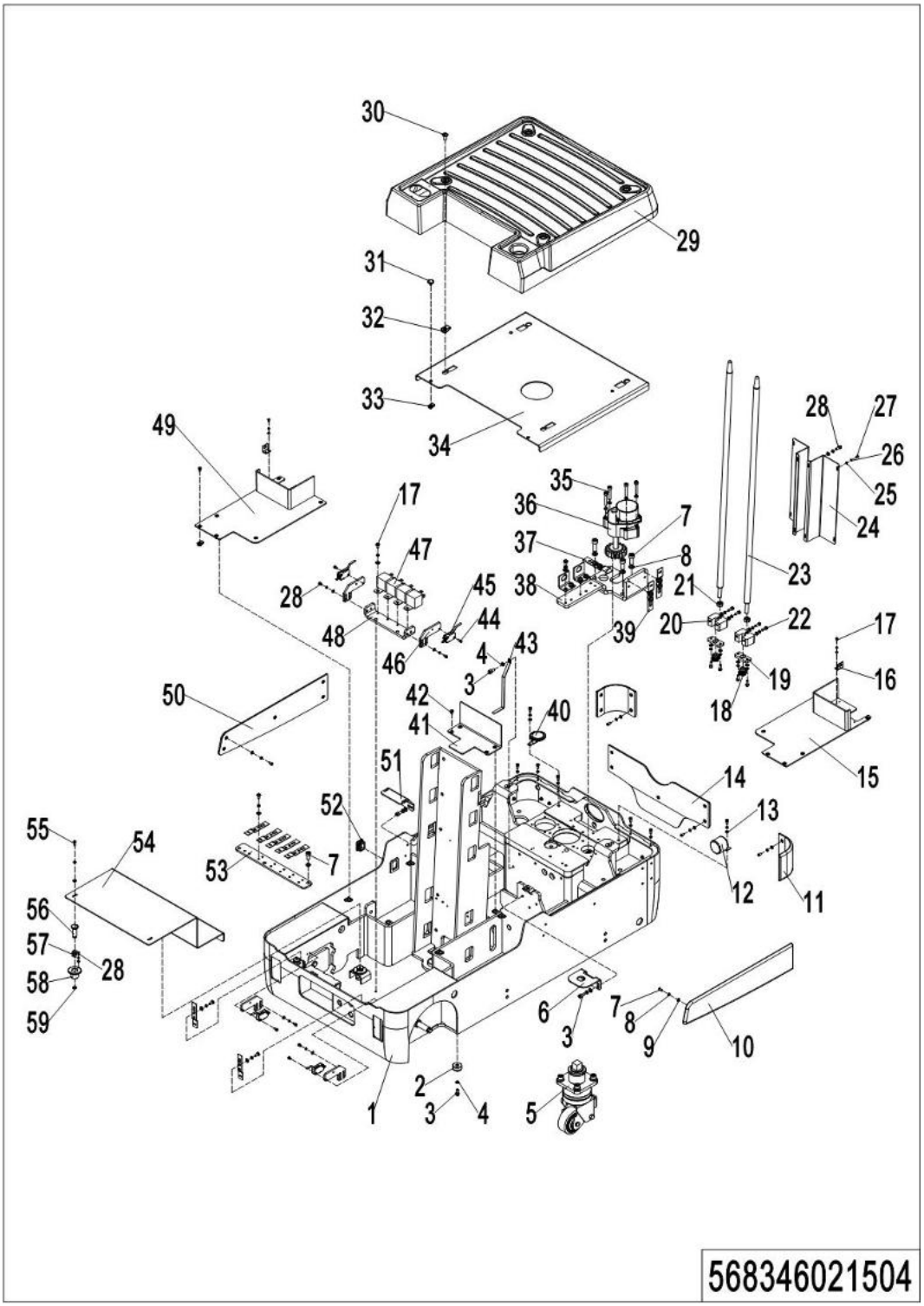

04 Truck Frame, Single drive-N2（potentiometer）-N2 (568346021504)

No.	Item Code	Mark	Item Description	Qty.	Substitute	Note
1	568321510014		Chassis	1		
2	568321520043		Mounting Base	4		
3	910200200055		Screw	11		
4	910400500006		Spring Washer	11		
5	568316510000		Caster	2		
6	568321520101		Baseboard	1		
7	910200200033		Screw	36		
8	910400500005		Spring Washer	48		
9	910400100005		Flat Washer	37		
10	568321520079		Bumper Rail	1		
11	568321520078		Bumper Rail	2		
12	568333010027		buzzer	1		
13	910400100006		Flat Washer	7		
14	568321520077		Bumper Rail	1		
15	568321510005		Close Plate	1		
16	921300300003		Holder	4		
17	910200500034		Screw	32		
18	568355020052		Water Joint	2		
19	568321520094		Mounting Plate	2		
20	568321520095		Mounting Base	2		
21	910300100008		Nut	2		
22	910200200146		Screw	8		
23	568321520096		Guide Rail	2		
24	568321520080		Bracket	2		
25	910400100003		Flat Washer	56		
26	910400500003		Spring Washer	56		
27	910200300005		Screw	4		
28	910200200015		Screw	20		
29	568321520100		Plate	1		
30	941100100007		Screw	4		

04 Truck Frame, Single drive（potentiometer）-N2 (568346021504) Continuation

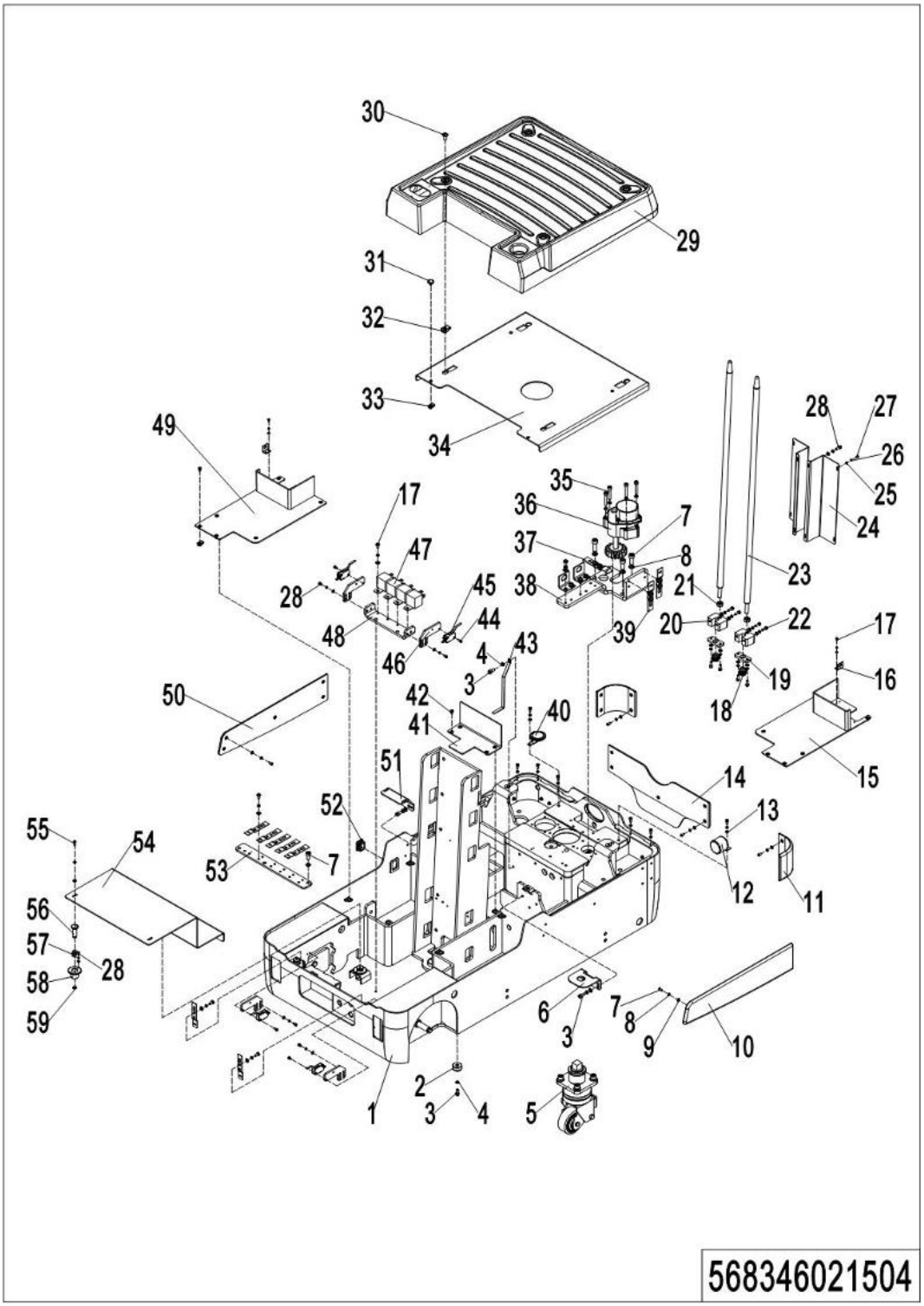

04 Truck Frame, Single drive（potentiometer）-N2 (568346021504) Continuation

No.	Item Code	Mark	Item Description	Qty.	Substitute	Note
31	910203400001		Screw	2		
32	940400400003		Cage Nut	4		
33	940400400001		Cage Nut	18		
34	568321510015		Bracket	1		
35	910200200017		Screw	4		
36	921800100057		Position sensor	1		
37	921300300010		Connector Holder	1		
38	568321520098		Mounting Plate	1		
39	921300300005		Holder	12		
40	920500100001		Button	1		
41	568321520041		Close Plate	1		
42	910200400018		Screw	16		
43	602021520074		Electrostatic tape	1		
44	910200500012		Screw	4		
45	920200300012		Microswitch	4		
46	568321520075		Mounting Plate	4		
47	920800100011		Relay	4		
48	568321520091		Mounting Plate	1		
49	568321510006		Close Plate	1		
50	568321520085		Bumper Rail	1		
51	568321520112		Baseboard	1		
52	506621520022		Dust Cap	1		
53	568321520074		Mounting Plate	1		
54	568321520039		Close Plate	1		
55	910200300017		Screw	4		
56	568321520076		Pin	4		
57	940400500002		Spring	4		
58	568321520088		Stop Sleeve	4		
59	910401300006		Circlip	4		

Chapter 4: Storage device

01 Storage table (568346038001)

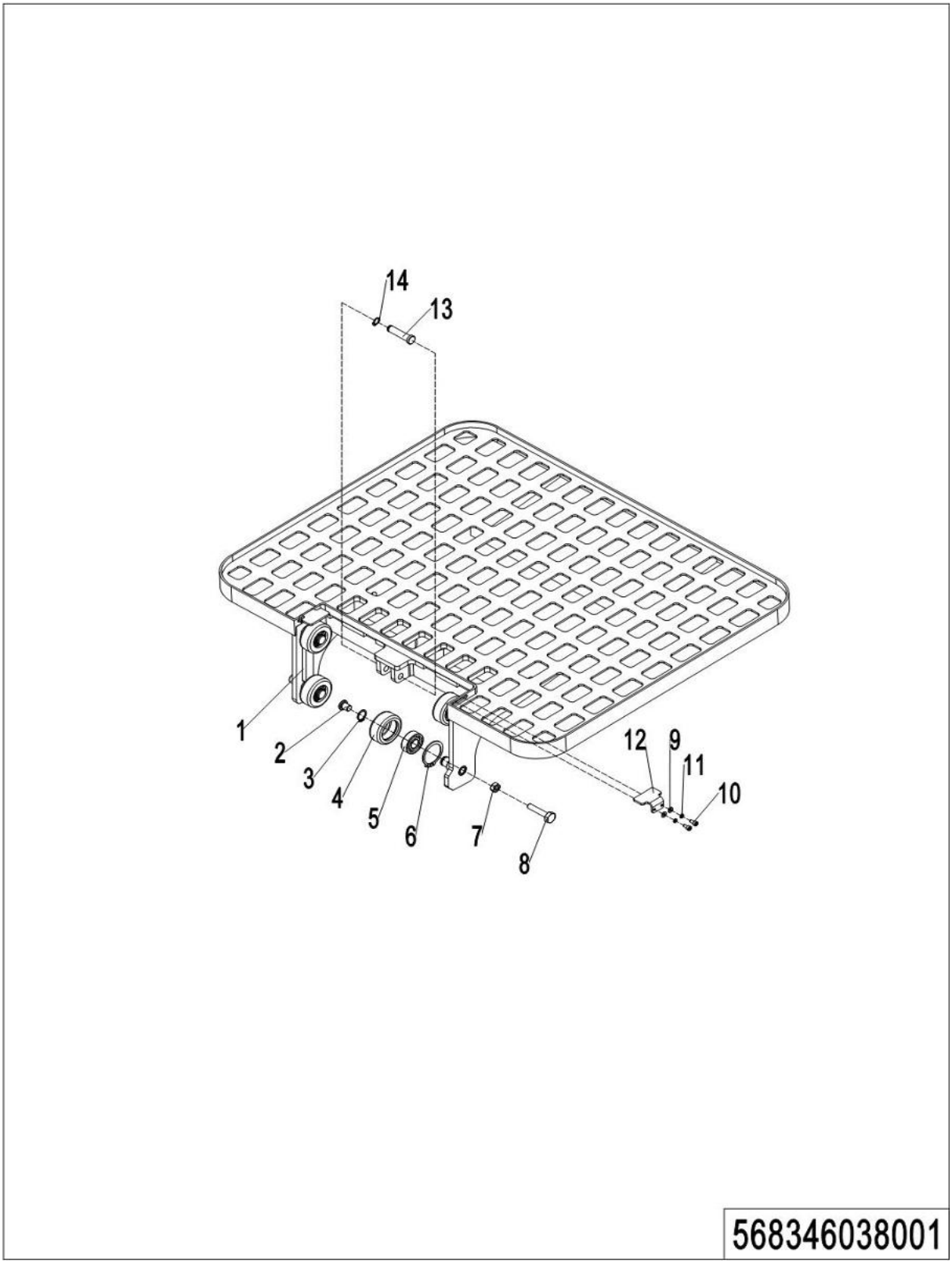

01 Storage table (568346038001)

No.	Item Code	Mark	Item Description	Qty.	Substitute	Note
1	568338010000		Storage rack	1		
2	568338020010		Subplate	4		
3	910401300006		Circlip	4		
4	568338020001		Roller	4		
5	910700200017		Bearing	4		
6	910401400030		Check Ring	4		
7	910300100006		Nut	4		
8	910200200061		Screw	4		
9	910400100003		Flat Washer	4		
10	910200200012		Screw	4		
11	910400500003		Spring Washer	4		
12	568338020012		Mounting Plate	2		
13	568338020011		Pin	1		
14	910401300002		Circlip	1		

02 Platform (568346053501)

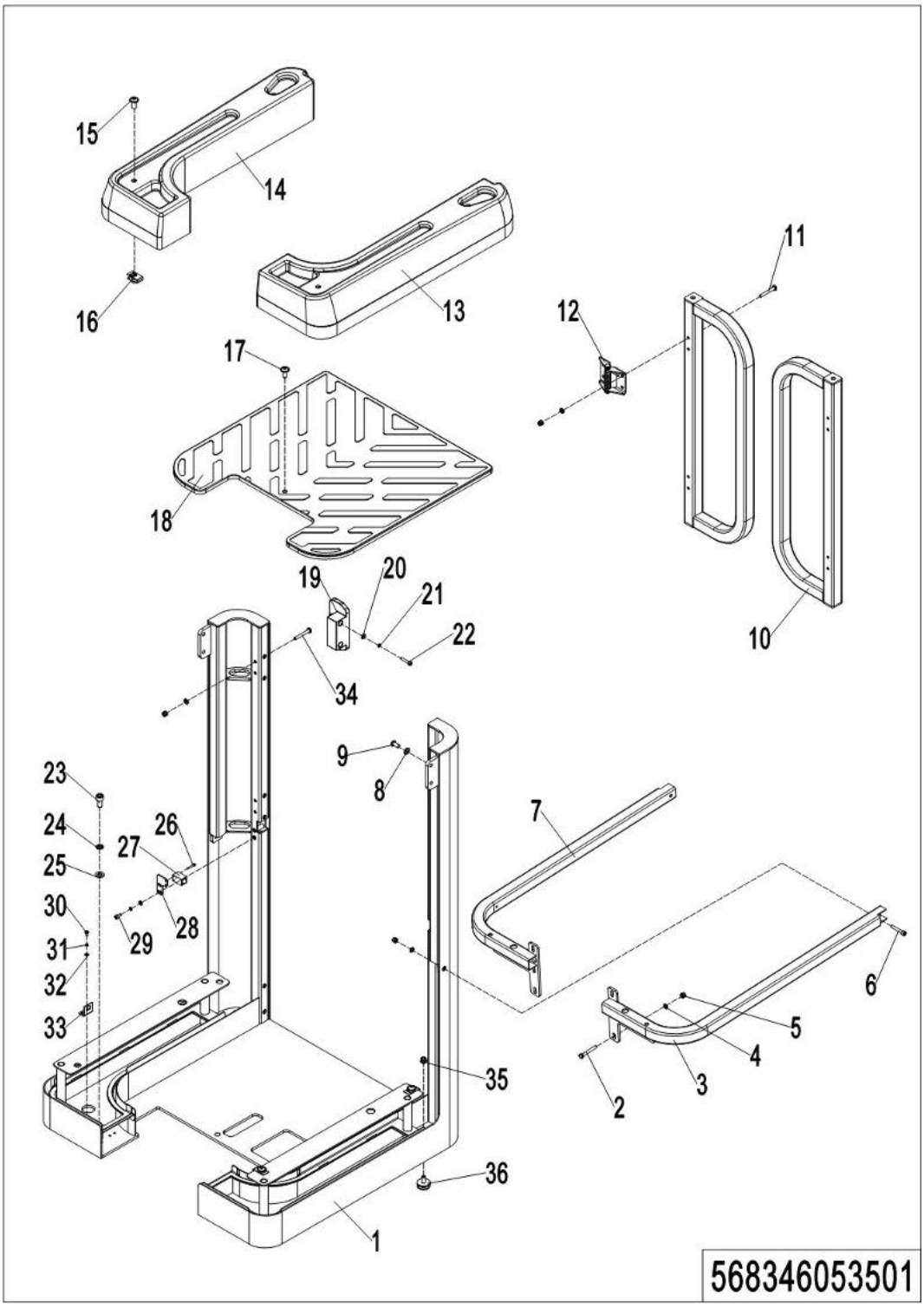

02 Platform (568346053501)

No.	Item Code	Mark	Item Description	Qty.	Substitute	Note
1	568353510000		Platform	1		
2	910200200043		Screw	6		
3	568353510003		Handrail	1		
4	910400100005		Flat Washer	30		
5	910300500003		Nut	24		
6	910200200040		Screw	2		
7	568353510004		Handrail	1		
8	910400100006		Flat Washer	4		
9	910200300024		Screw	4		
10	568353510001		Door	2		
11	910200500058		Screw	8		
12	940801100002		Hinge	4		
13	568353520021		Cover	1		
14	568353520022		Cover	1		
15	941100100004		Screw	4		
16	940400400003		Cage Nut	4		
17	941100100007		Screw	1		
18	568353520023		Platform	1		
19	568353520029		Crash Pad	4		
20	910400100004		Flat Washer	12		
21	910400500004		Spring Washer	12		
22	910200200023		Screw	8		
23	910200200077		Screw	4		
24	910400500007		Spring Washer	4		
25	910400100007		Flat Washer	4		
26	910200500015		Screw	4		
27	568333010021		Induction Switch	2		
28	568353520017		Mounting Plate	2		
29	910200200021		Screw	4		
30	910200500034		Screw	10		

02 Platform (568346053501) Continuation

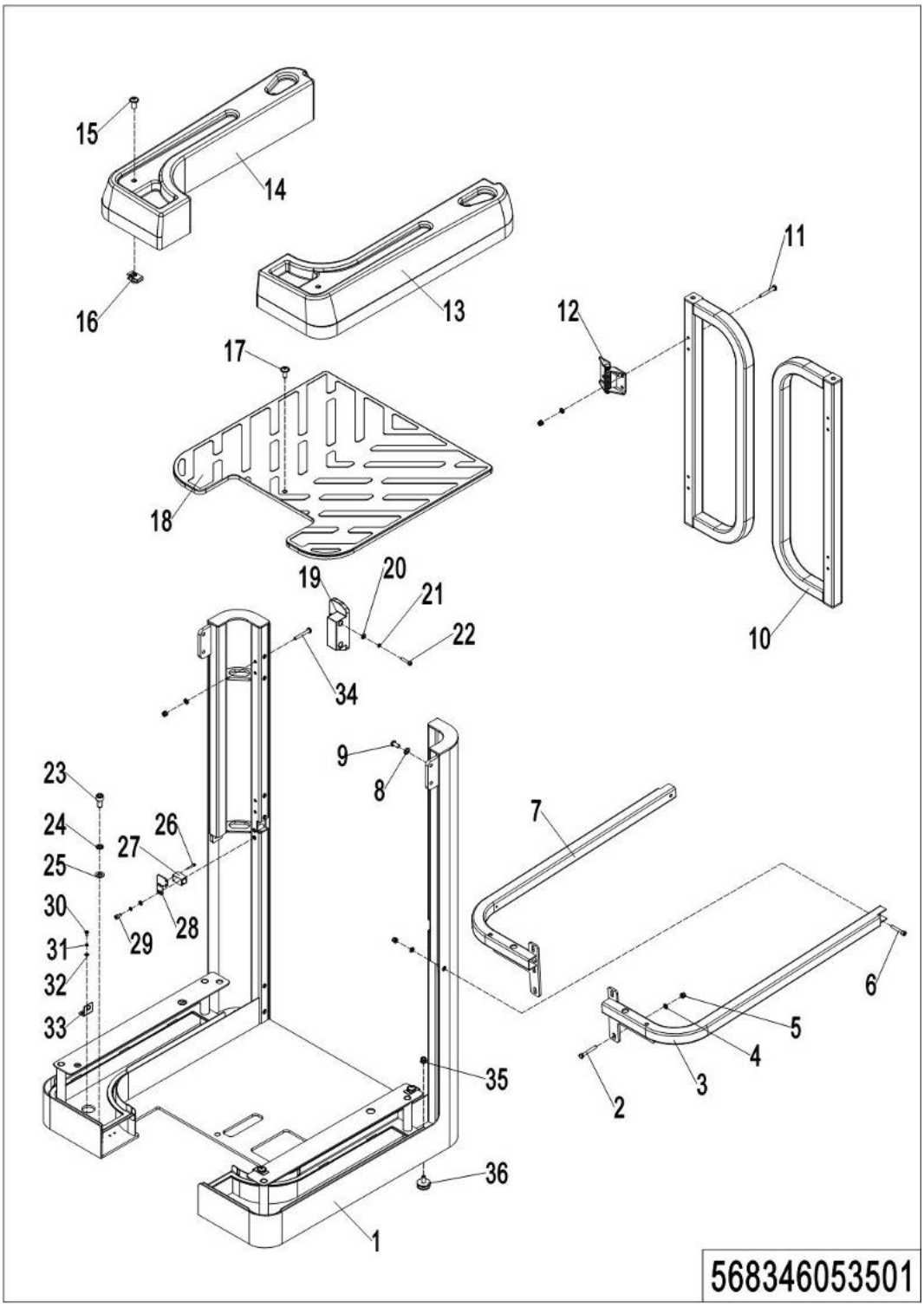

01 Platform (568346053501) Continuation

No.	Item Code	Mark	Item Description	Qty.	Substitute	Note
31	910400500003		Spring Washer	10		
32	910400100003		Flat Washer	10		
33	921300300003		Holder	5		
34	910200200042		Screw	8		
35	910300500004		Nut	2		
36	505618020016		Crash Pad	2		

Chapter 5: Mast system

01 Mast (568346055001)

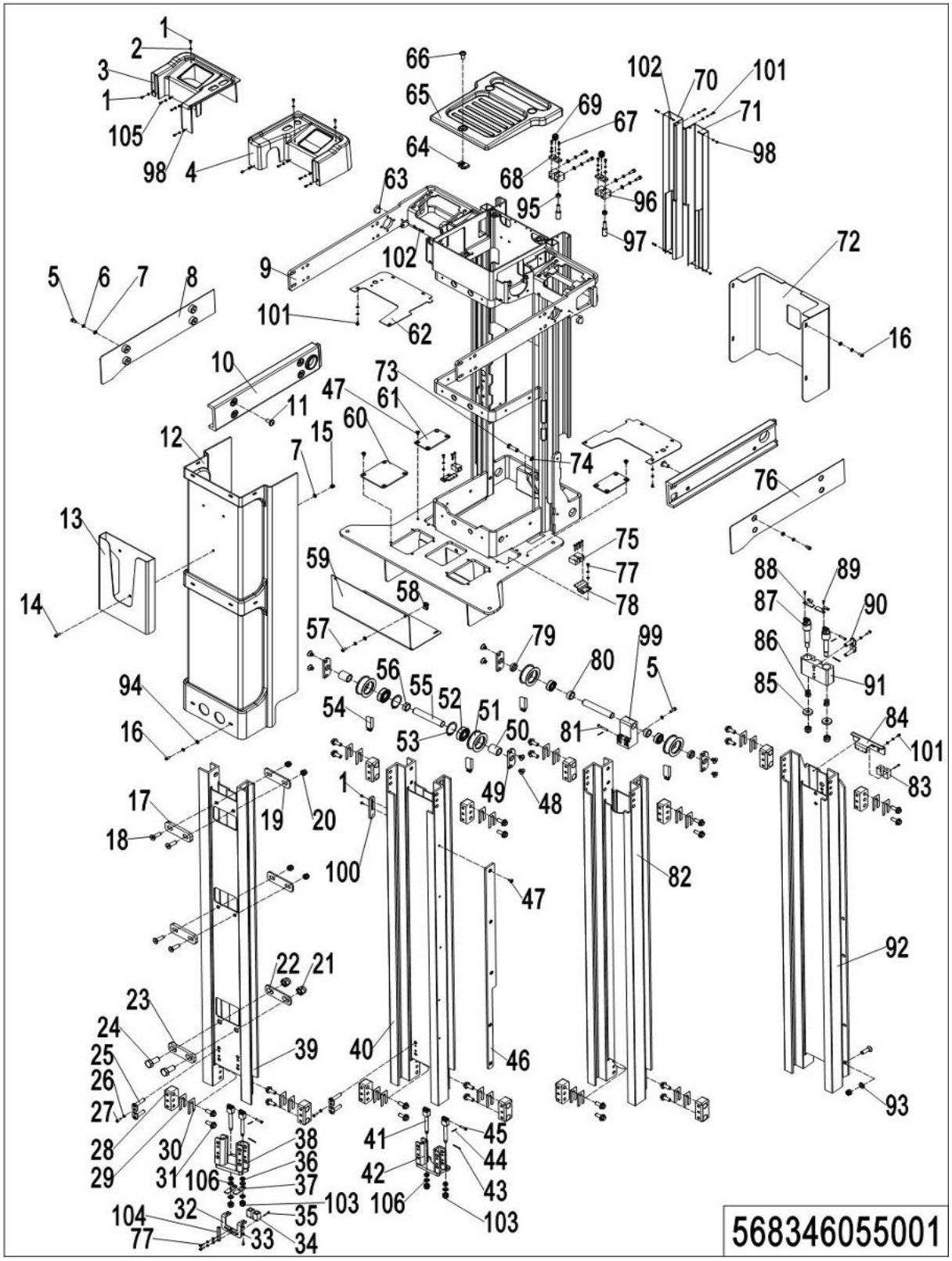

01 Mast (568346055001)

No.	Item Code	Mark	Item Description	Qty.	Substitute	Note
1	910200300005		Screw	8		
2	910400100003		Flat Washer	44		
3	568355020055		Cover	1		
4	568355020056		Cover	1		
5	910200200034		Screw	9		
6	910400500005		Spring Washer	38		
7	910400100005		Flat Washer	21		
8	568355010002		Close Plate	1		
9	568355010006		Fixing Mount	1		
10	568355020001		Rod	2		
11	941100100007		Screw	8		
12	568355020003		Cover	1		
13	568355010008		File Box	1		
14	910200300018		Screw	3		
15	910300500003		Nut	3		
16	910200300017		Screw	14		
17	568355020002		Subplate	2		
18	910200400042		Screw	12		
19	568355020072		Subplate	2		
20	910300500005		Nut	14		
21	910300500008		Nut	2		
22	568355020073		Subplate	1		
23	568355020004		Subplate	1		
24	910100800006		Bolt	2		
25	568355010004		Pin	8		
26	910400500004		Spring Washer	10		
27	910200300013		Screw	10		
28	568355020040		Friction	12		
29	568355020075		Subplate	12		
30	568355020086		Subplate	12		

01 Mast (568346055001) Continuation

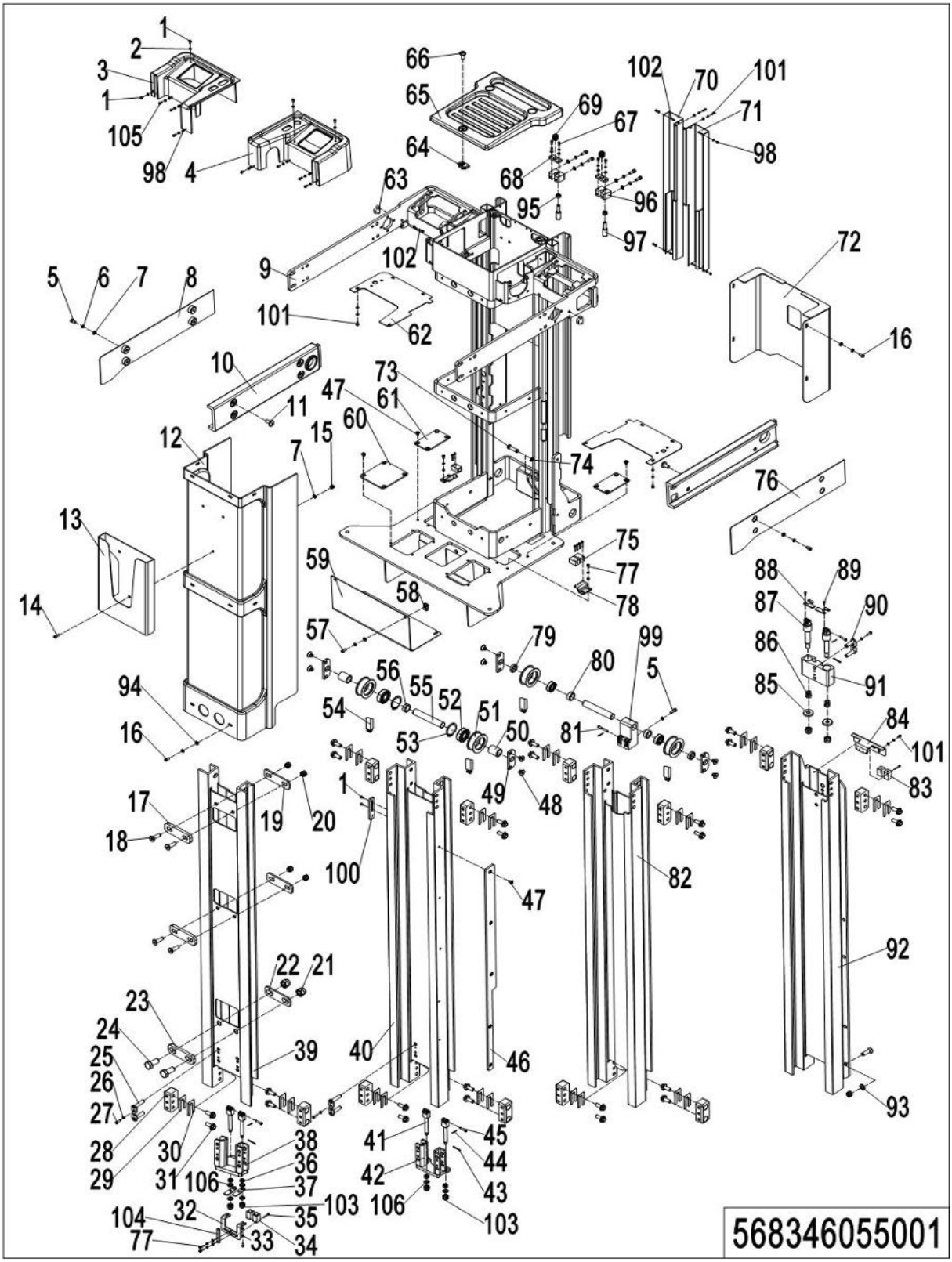

01 Mast (568346055001) Continuation

No.	Item Code	Mark	Item Description	Qty.	Substitute	Note
31	910100800008		Bolt	24		
32	568355020081		Mounting Plate	1		
33	910400500003		Spring Washer	26		
34	568333010023		Induction Switch	2		
35	910200500015		Screw	14		
36	910300100007		Nut	4		
37	568355020083		Stop Plate	2		
38	568355010000		Anchor	1		
39	568355020068		Mast	1		
40	568355020067		Mast	1		
41	568355020008		Chain Anchor	4		
42	568355010001		Anchor	1		
43	910600600019		Cotter Pin	6		
44	910600600006		Cotter Pin	7		
45	941100800014		Pin	6		
46	568355020069		Induction Block	1		**2700**
46	568355020096		Induction Block	1		**3000**
47	910200400015		Screw	17		
48	910200400033		Screw	8		
49	568355020041		Fixing Plate	4		
50	568355020043		Spacer Bush	2		
51	568355020044		Chain Pulley	4		
52	910700200019		Bearing	4		
53	910401400013		Circlip	4		
54	568355010009		Chain	4		
55	568355020042		Axle	2		
56	568355020046		Spacer Bush	1		
57	910200300019		Screw	4		
58	940400400001		Cage Nut	4		
59	568355020005		Close Plate	1		

01 Mast (568346055001) Continuation

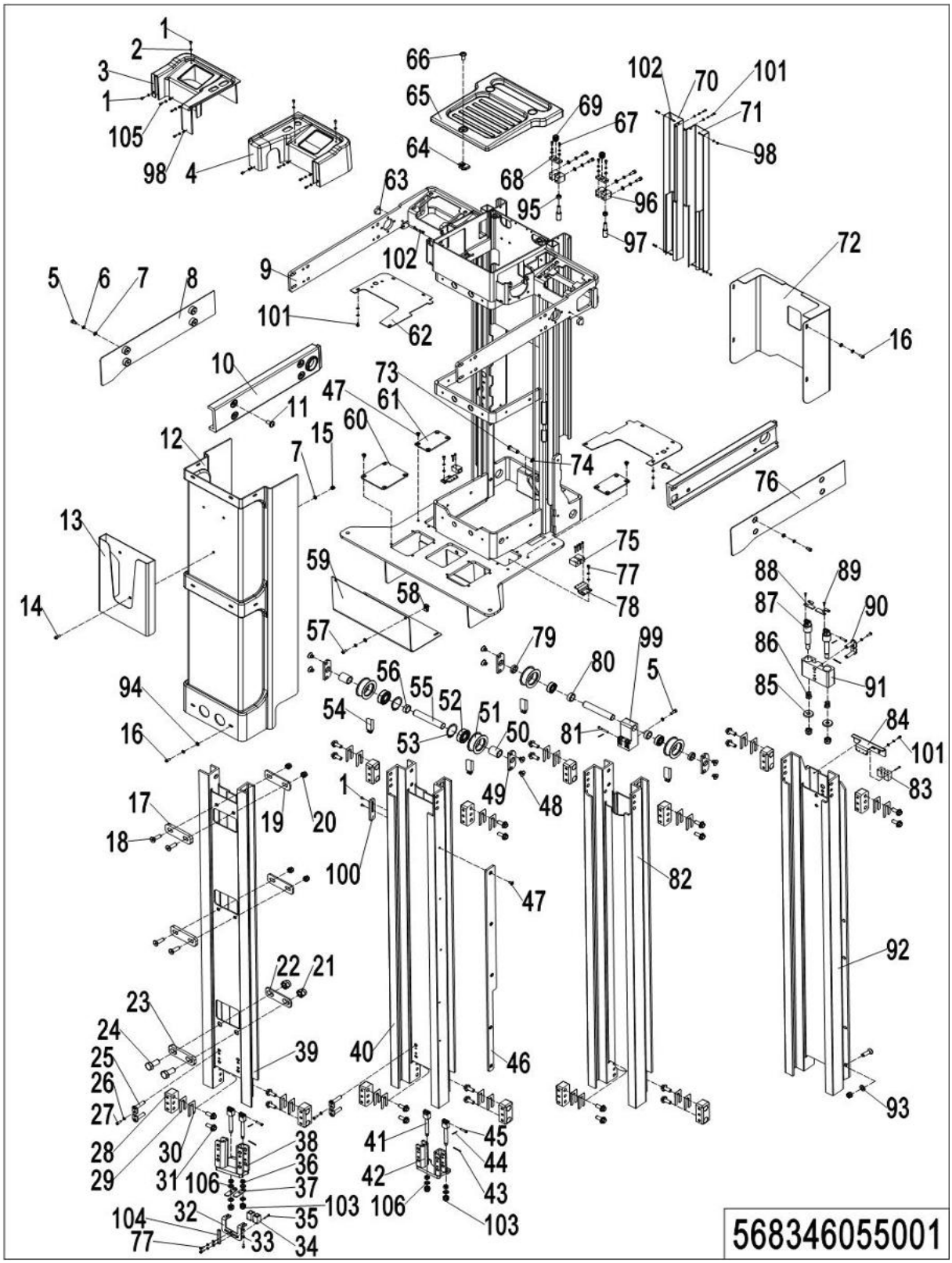

01 Mast (568346055001) Continuation

No.	Item Code	Mark	Item Description	Qty.	Substitute	Note
60	568355020039		Mounting Plate	1		
61	568355020061		Mounting Plate	2		
62	568355020064		Baseboard	2		
63	568355020027		Mounting Base	2		
64	940400400003		Cage Nut	3		
65	568355020000		Rod	1		
66	941100100004		Screw	3		
67	910200200035		Screw	8		
68	568321520094		Mounting Plate	2		
69	568355020052		Water Joint	2		
70	568355010011		Close Plate	1		
71	568355010010		Close Plate	1		
72	568355010005		Close Plate	1		
73	568355020050		Pin	1		
74	910401300002		Circlip	1		
75	568333010024		Induction Switch	3		
76	568355010003		Close Plate	1		
77	910200200014		Screw	8		
78	568355020060		Mounting Plate	2		
79	568355020048		Spacer Bush	2		
80	568355020047		Spacer Bush	2		
81	941100800015		Pin	1		
82	568355020066		Mast	1		
83	568333010022		Induction Switch	2		
84	568355020057		Mounting Plate	1		
85	568355020080		Subplate	2		
86	940400500002		Spring	2		
87	568355020079		Chain Anchor	2		
88	568355020078		Mounting Plate	2		
89	910200200001		Screw	4		

01 Mast (568346055001) Continuation

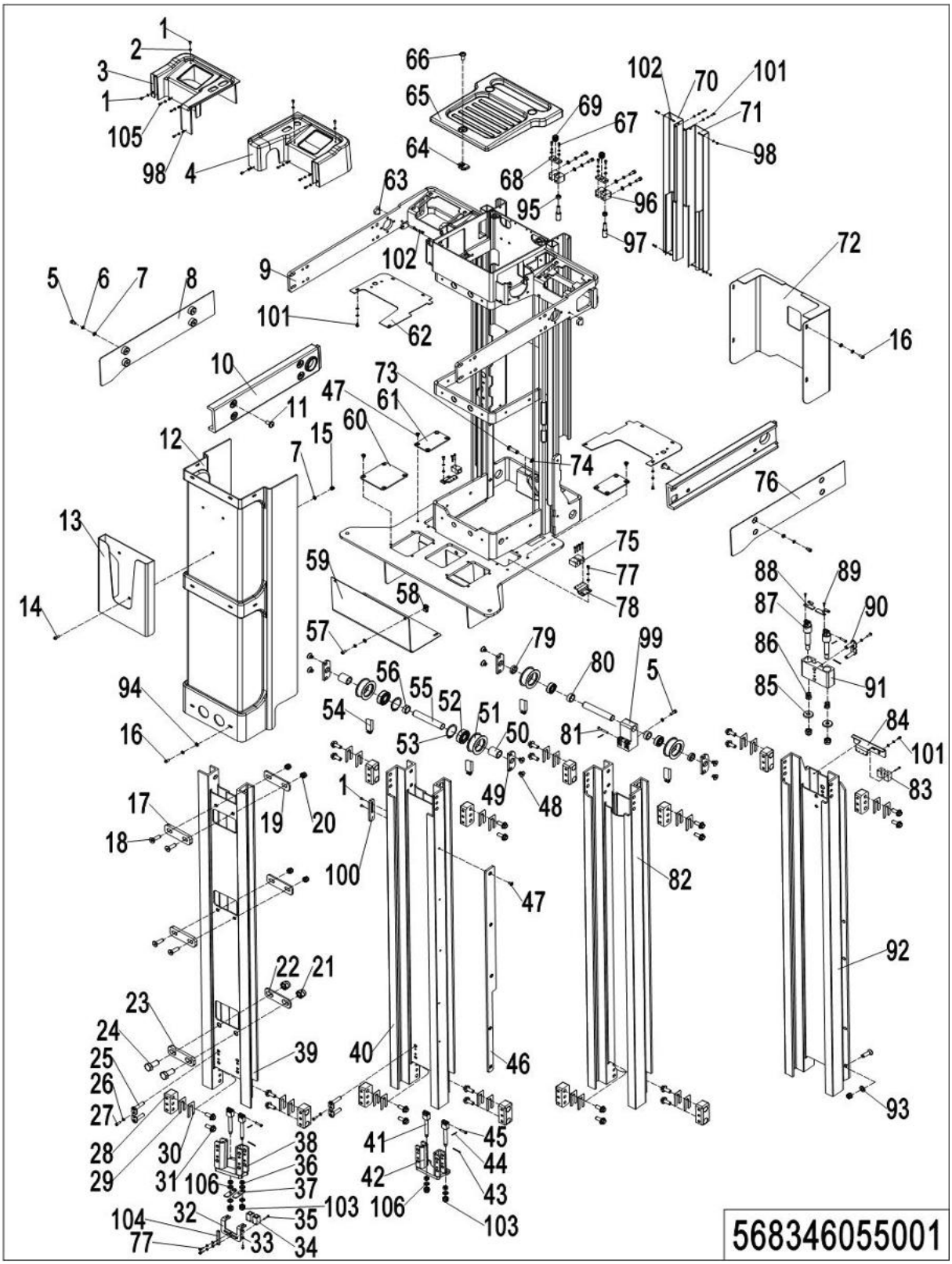

01 Mast (568346055001) Continuation

No.	Item Code	Mark	Item Description	Qty.	Substitute	Note
90	568355010007		Pin	2		
91	568355020070		Anchor	1		
92	568355020065		Mast	1		
93	910400100007		Flat Washer	8		
94	910402200001		Flat Washer	16		
95	910300100008		Nut	2		
96	568321520095		Mounting Base	2		
97	568355020089		Guide Rail	2		
98	910300500001		Nut	10		
99	568355020054		Yoke	1		
100	568355020063		Induction Block	1		
101	910200200012		Screw	14		
102	910200200015		Screw	6		
103	910300500005		Nut	4		
104	568355020095		Stop Dog	1		
105	910200300007		Screw	6		
106	910402700001		Bonded Washer	6		

Chapter 6: Steering System, Braking System, Wheels

01 Tiller Unit (568346011001)

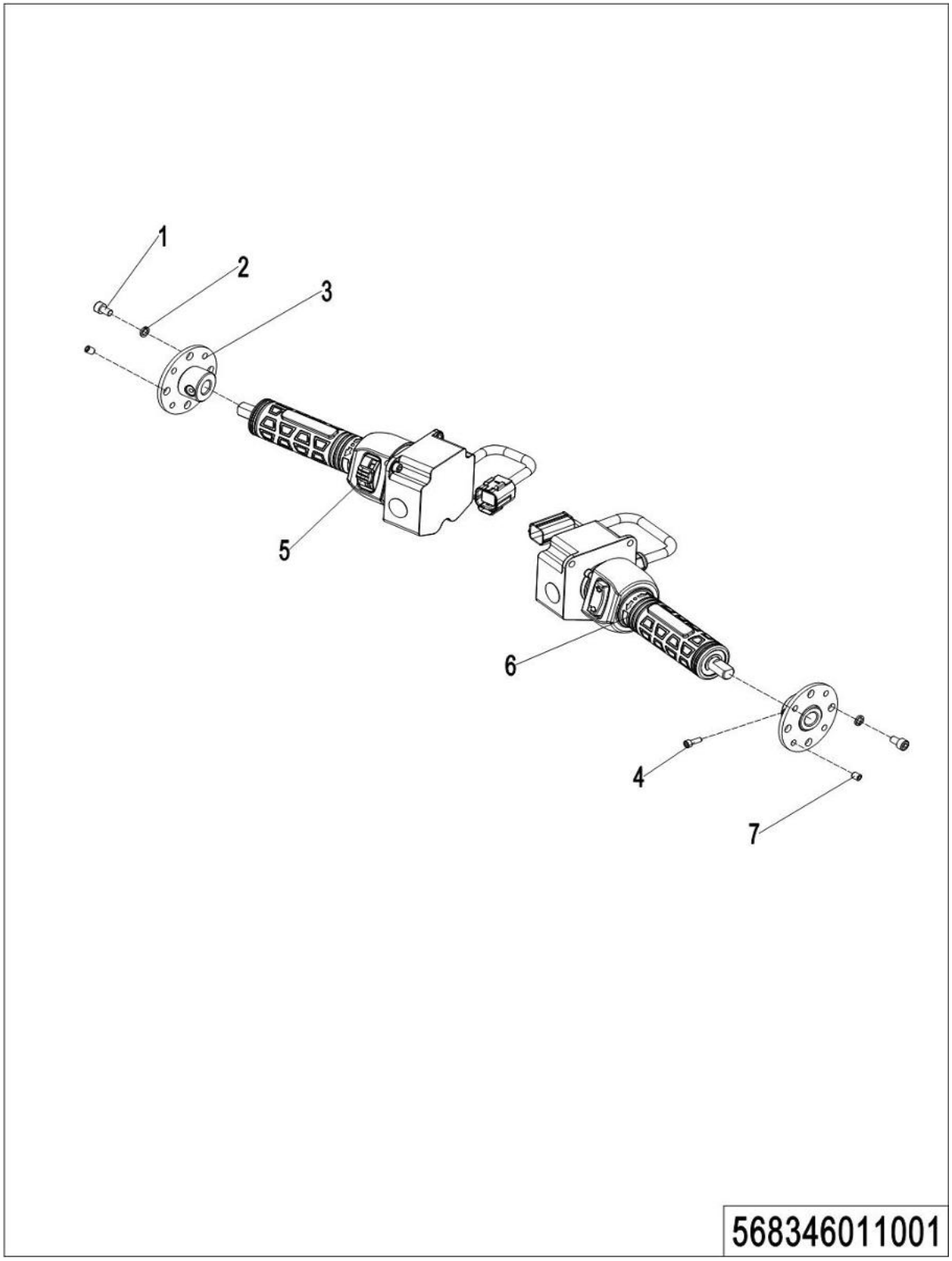

01 Tiller Unit (568346011001)

No.	Item Code	Mark	Item Description	Qty.	Substitute	Note
1	910200200033		Screw	8		
2	910400100005		Flat Washer	8		
3	568311010000		Fixing Base	2		
4	910200300005		Screw	1		
5	922100100052		Handle	1		
5	922100100180		Handle	1		**CE**
6	922100100053		Handle	1		
6	922100100181		Handle	1		**CE**
7	910200800008		Screw	8		

02 Control Handle, Left (568346011002)

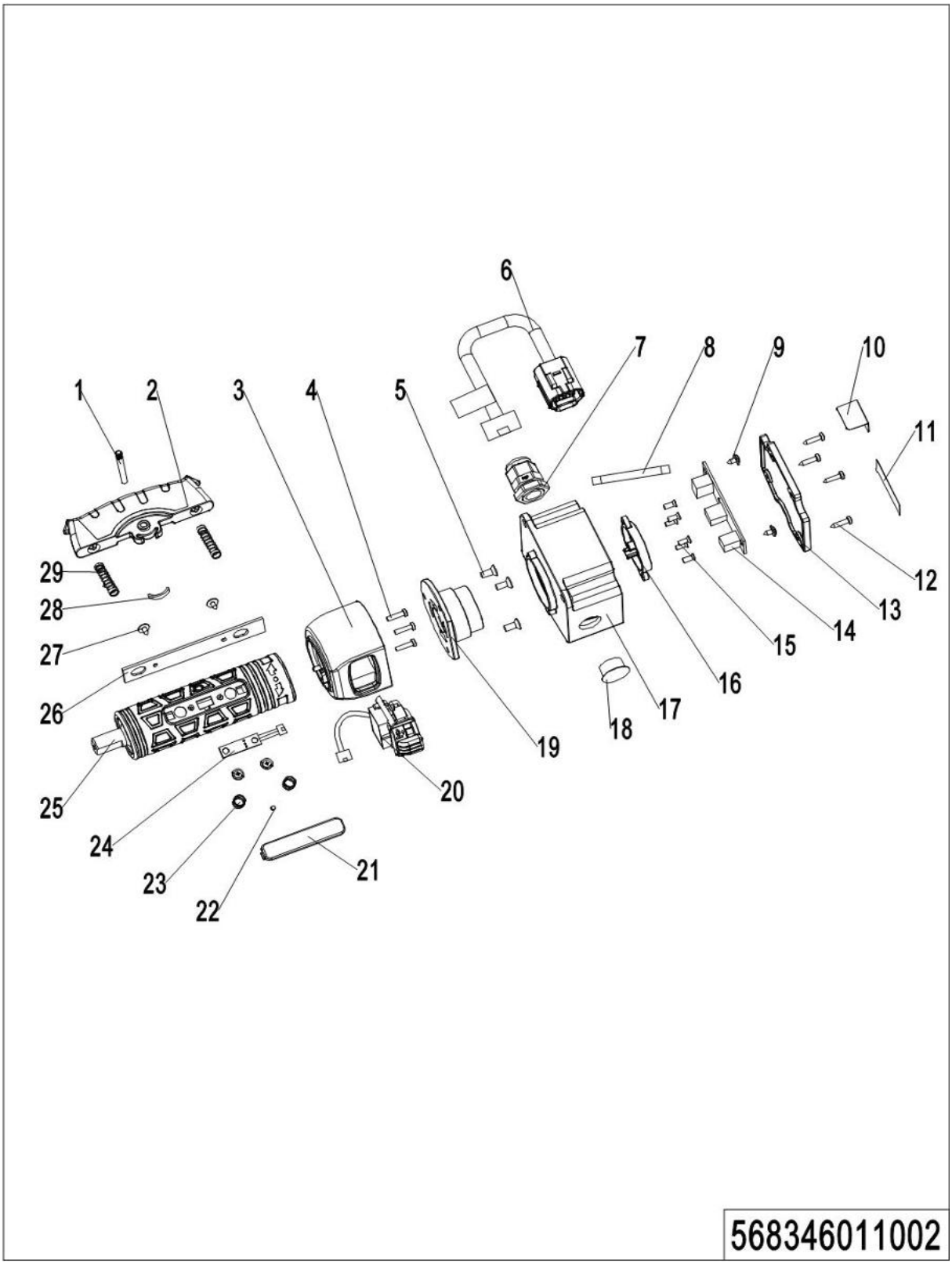

02 Control Handle, Left (568346011002)

No.	Item Code	Mark	Item Description	Qty.	Substitute	Note
1	568398520041		Dowel Pin	1		
2	568398520042		Button	1		
3	568398520043		Fixing Base	1		
4	568398520044		Bolt	3		
5	568398520045		Bolt	3		
6	568398520046		Wire Harness	1		
7	568398520047		Water Joint	1		
8	568398520048		Cables	1		
9	568398520049		Screw	2		
10	568398520050		Label	1		
11	568398520051		Label	2		
12	568398520052		Screw	4		
13	568398520053		End Cap	1		
14	568398520054		PCB	1		
14	568398520089		PCB	1		
15	568398520055		Bolt	6		
16	568398520056		Bracket	1		
17	568398520057		Mounting Box	1		
18	568398520058		spout plug	1		
19	568398520059		Axle	1		
20	568398520060		Sensor	1		
21	568398520061		Button	1		
22	568398520062		Magnet	1		
23	568398520063		Spring	2		
24	568398520064		PCB	1		
25	568398520065		Handle	1		
26	568398520066		PCB	1		
27	568398520067		Screw	4		
28	568398520068		Magnet	1		
29	568398520069		Spring	2		

03 Control Handle, right (568346011003)

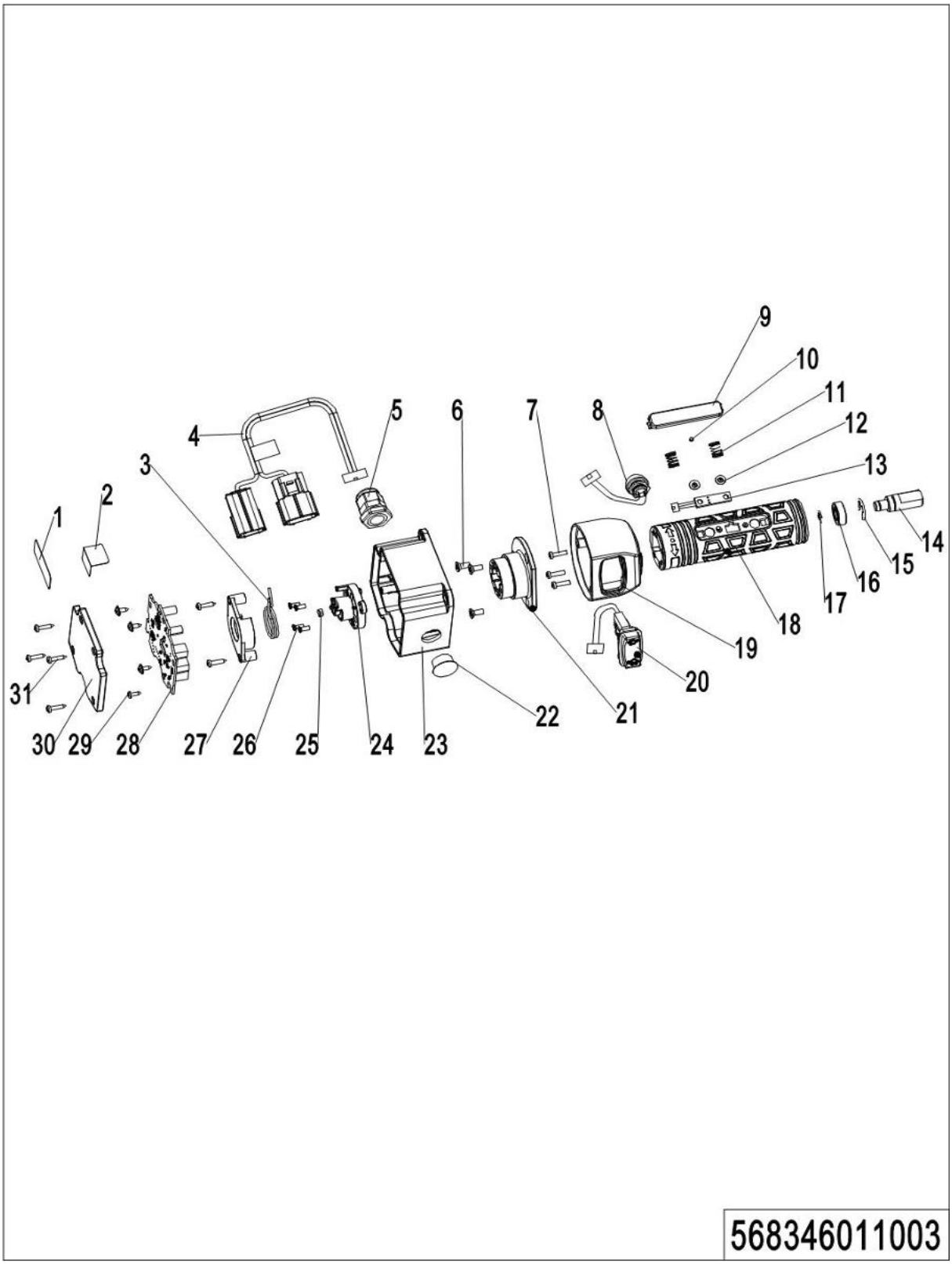

03 Control Handle, right (568346011003)

No.	Item Code	Mark	Item Description	Qty.	Substitute	Note
1	568398520051		Label	2		
2	568398520050		Label	1		
3	568398520070		Torsional Spring	1		
4	568398520071		Wire Harness	1		
5	568398520047		Water Joint	1		
6	568398520045		Bolt	3		
7	568398520044		Bolt	3		
8	568398520072		Horn Button	1		
9	568398520061		Button	1		
10	568398520062		Magnet	1		
11	568398520063		Spring	2		
12	568398520067		Screw	2		
13	568398520064		PCB	1		
14	568398520073		Pin	1		
15	568398520074		Check Ring	1		
16	568398520075		Bearing	1		
17	568398520076		Check Ring	1		
18	568398520077		Handle	1		
19	568398520043		Fixing Base	1		
20	568398520078		Switch	1		
21	568398520059		Axle	1		
22	568398520058		spout plug	1		
23	568398520057		Mounting Box	1		
24	568398520079		Bracket	1		
25	568398520080		Magnet	1		
26	568398520081		Bolt	4		
27	568398520082		Baffle	1		
28	568398520083		PCB	1		
28	568398520090		PCB	1		
29	568398520049		Screw	4		

03 Control Handle, right (568346011003) Continuation

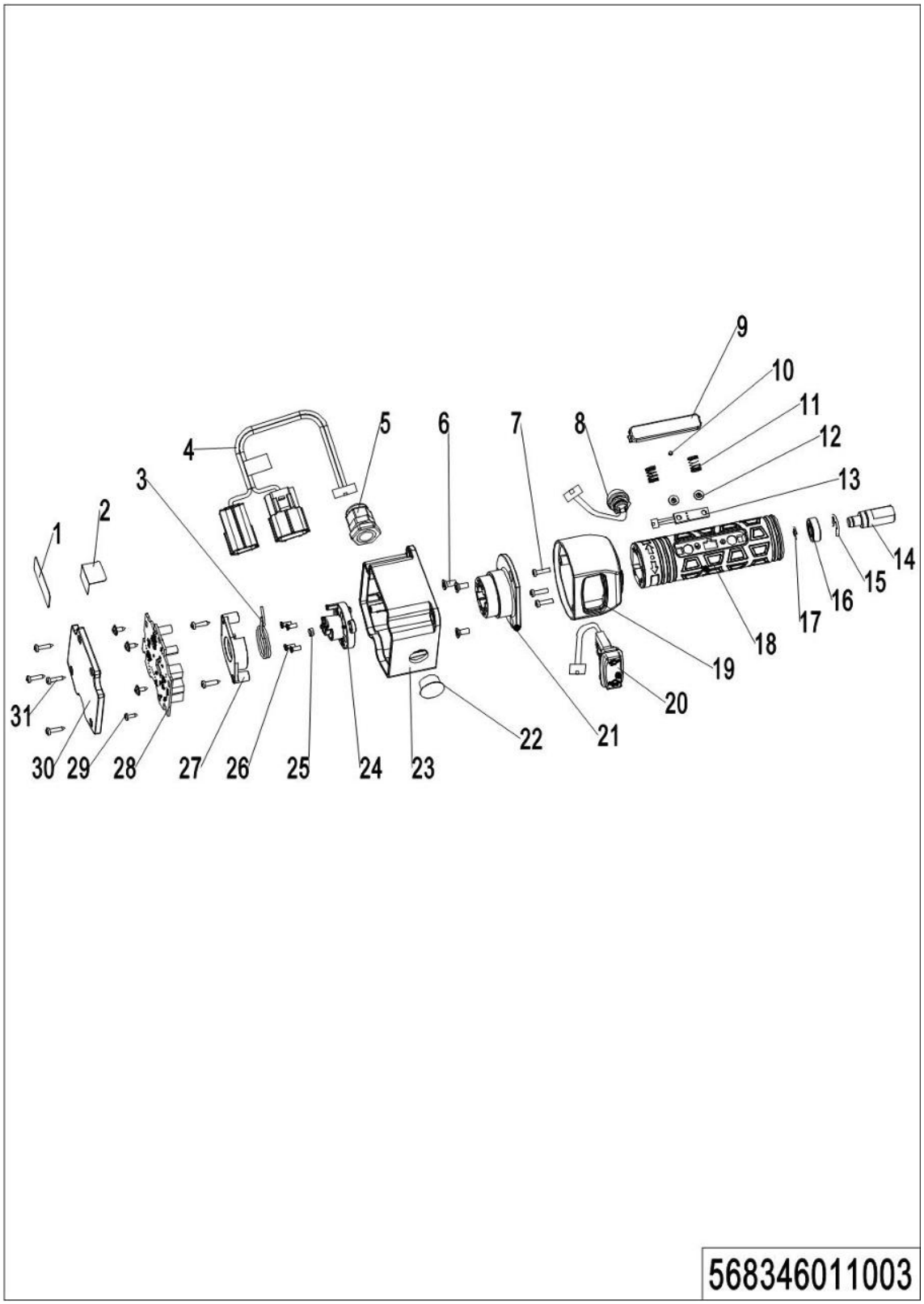

03 Control Handle, right (568346011003) Continuation

No.	Item Code	Mark	Item Description	Qty.	Substitute	Note
30	568398520053		End Cap	1		
31	568398520052		Screw	6		

04 rear wheel,PU(568346013001)

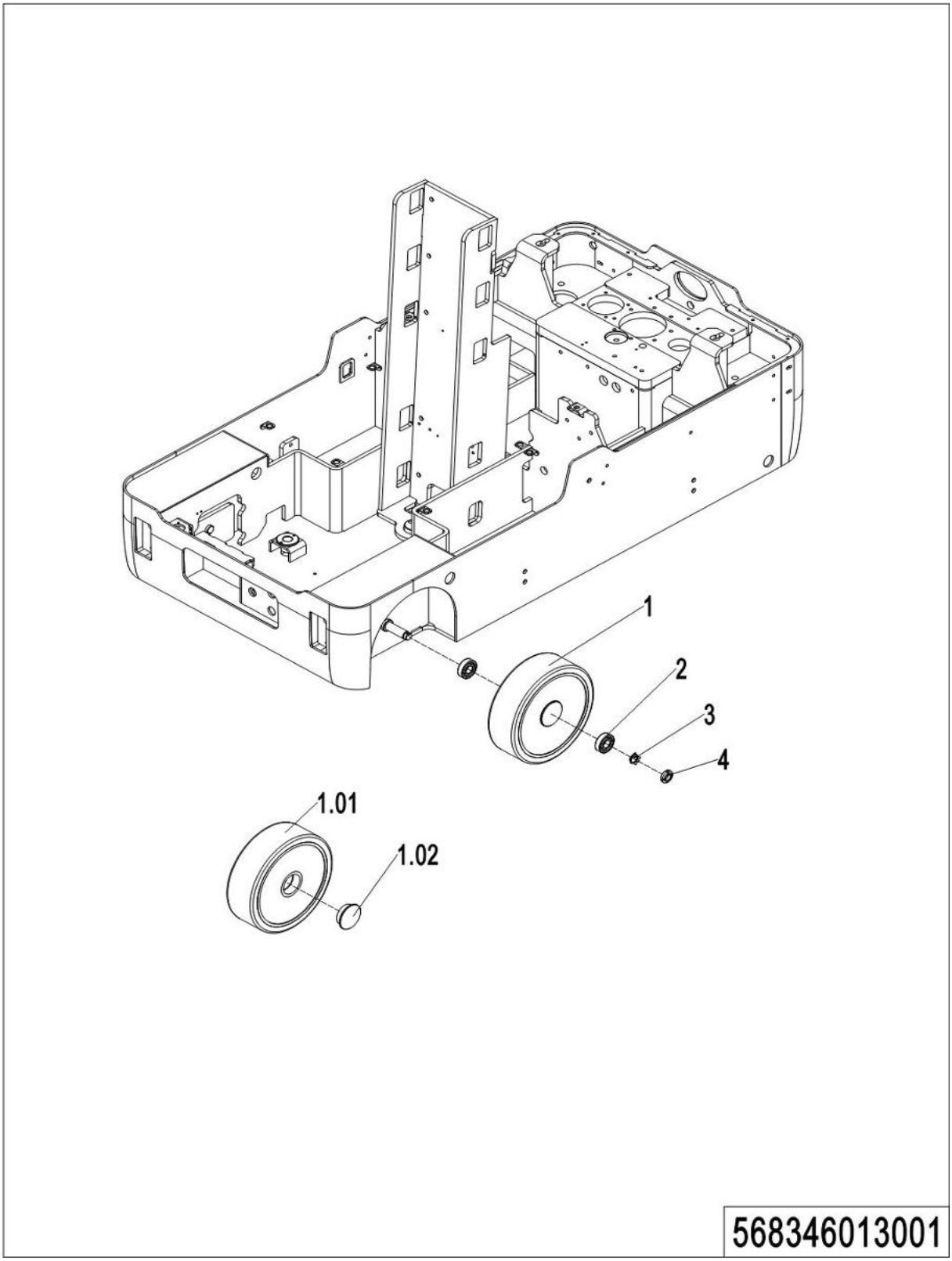

04 rear wheel,PU(568346013001)

No.	Item Code	Mark	Item Description	Qty.	Substitute	Note
1	940300400042		Tyre unit	2		
1.01	568398520033		Tyre	2		
1.02	568398520034		End Cap	2		
2	910700200019		Bearing	4		
3	910400900001		Lock Washer	2		
4	910300800001		Nut	2		

05 rear wheel, rubber (568346013002)

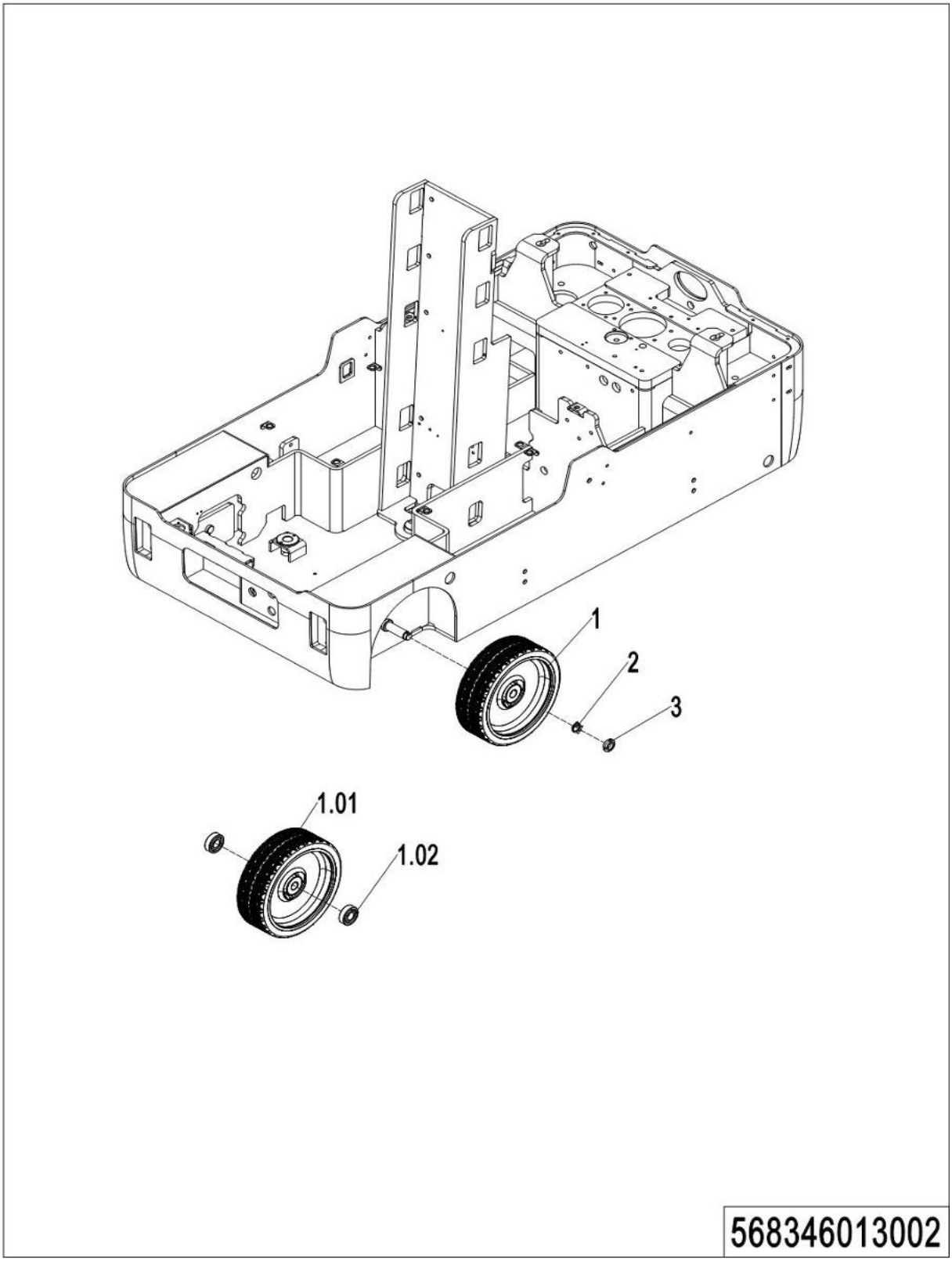

05 rear wheel, rubber (568346013002)

No.	Item Code	Mark	Item Description	Qty.	Substitute	Note
1	940300400037		Tyre unit	2		
1.01	568398520035		Tyre	2		
1.02	910700200019		Bearing	4		
2	910400900001		Lock Washer	2		
3	910300800001		Nut	2		

06 Caster (568346016501)

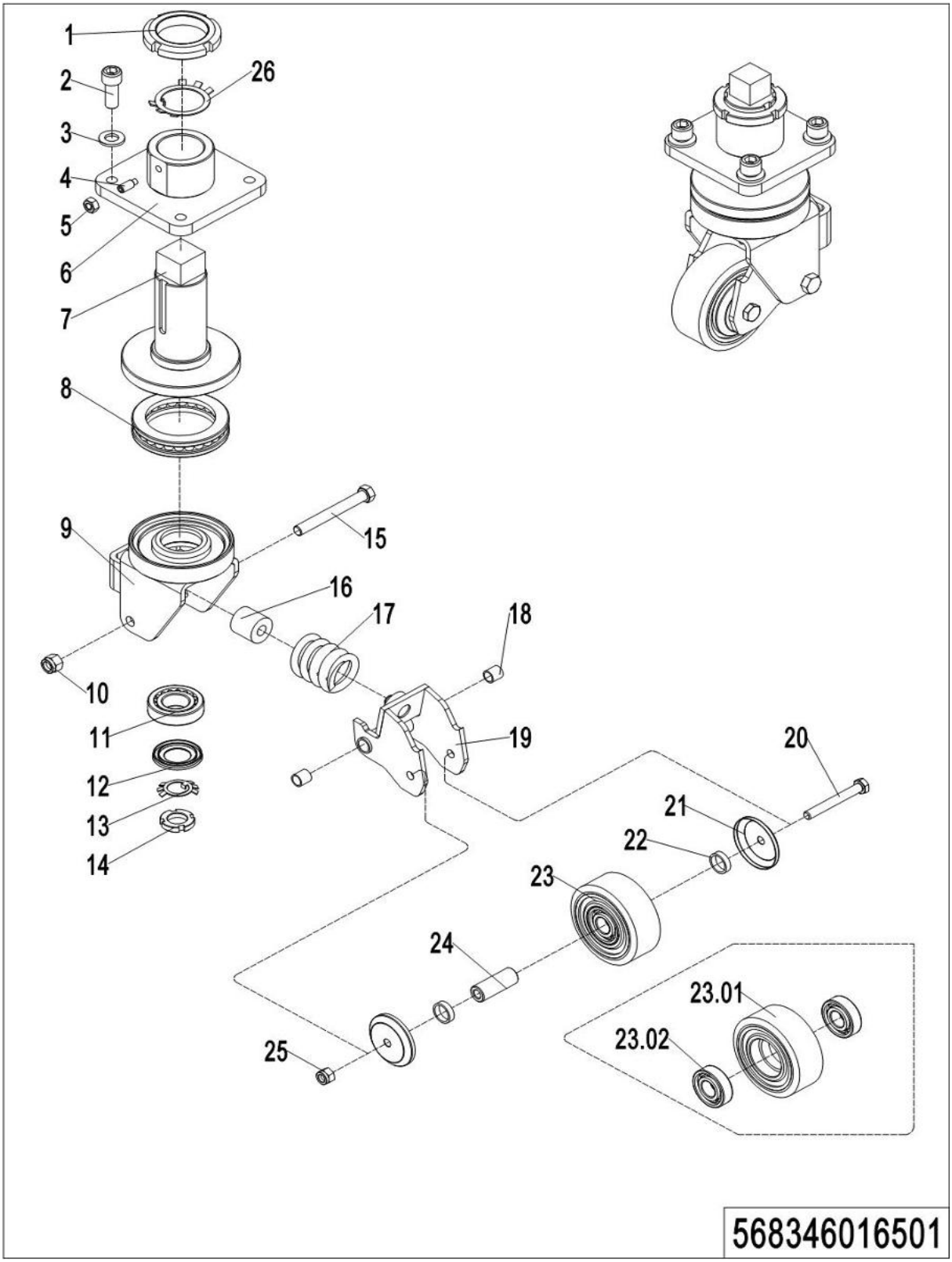

06 Caster (568346016501)

No.	Item Code	Mark	Item Description	Qty.	Substitute	Note
1	941100900004		Nut	2		
2	910200200098		Screw	8		
3	910400100008		Flat Washer	8		
4	910201000012		Screw	2		
5	910300100006		Nut	2		
6	532216510003		Fixing Base	2		
7	532216510002		Axle	2		
8	910700700011		Bearing	2		
9	568316510001		Wheel Carrier	2		
10	910300500006		Nut	2		
11	910700600001		Bearing	2		
12	941101000010		Dust Cap	2		
13	910400900002	1	Lock Washer	2		
14	910300700008	1	Nut	2		
15	941100200002		Bolt	2		
16	505616520000		Spring	2		
17	940400500006		Spring	2		
18	940500100002		Bushing	4		
19	505616510003		Whirling Arm	2		
20	910100100038	1	Bolt	2		
21	505616520011		Dust Cap	4		
22	505616520012		Check Ring	4		
23	505698510000		Wheel	2		
23.01	940300300018		WheelΦ100x40	2		
23.02	910700200019		Bearing	4		
24	505616520013		Bushing	2		
25	910300500005	1	Nut	1		
26	910400900017		Flat Washer	1		

Chapter 7: Electrical Parts

01 Display Assembly (568346010001)

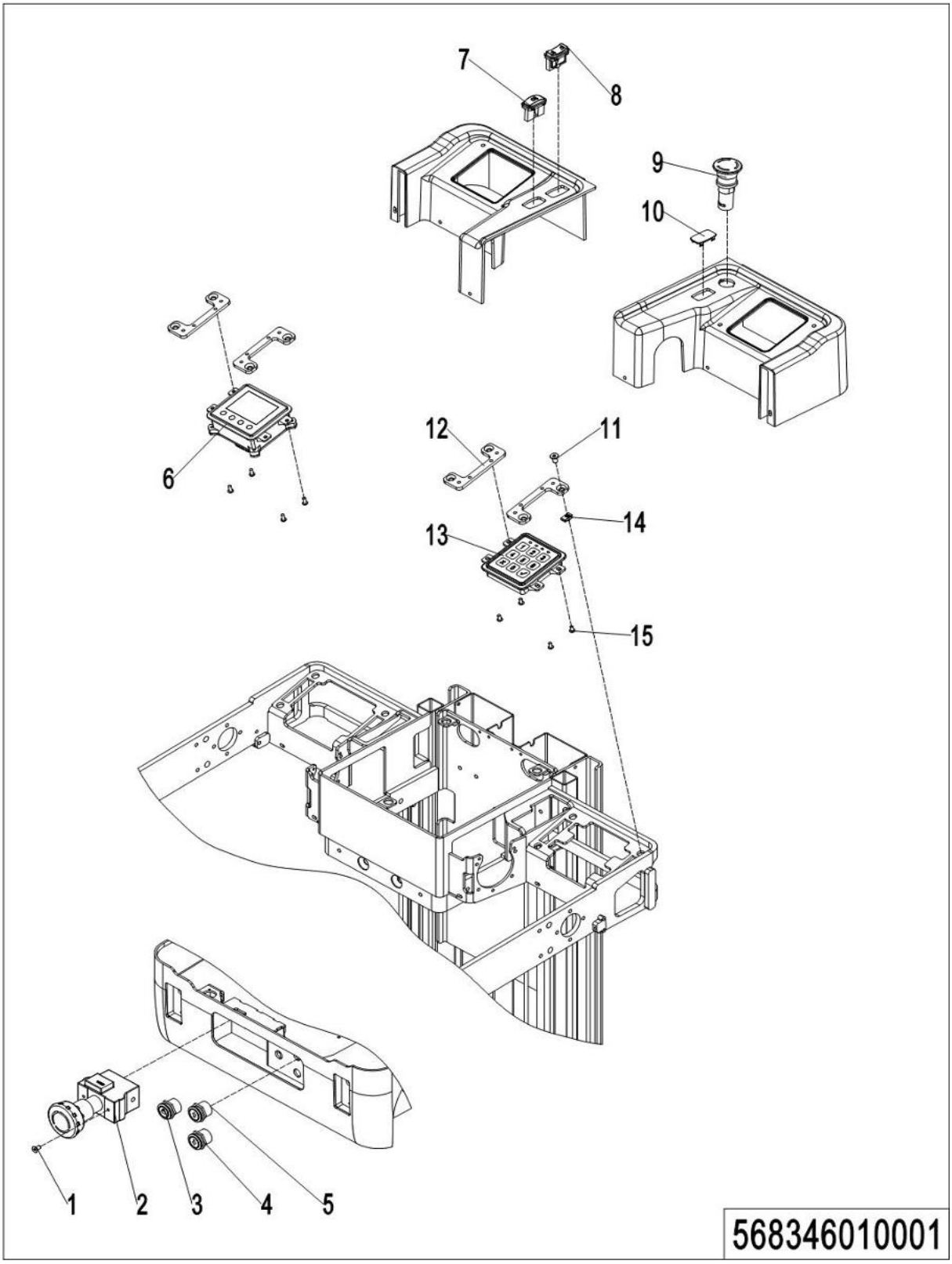

01 Display Assembly (568346010001)

No.	Item Code	Mark	Item Description	Qty.	Substitute	Note
1	910200400010		Screw	2		
2	920200100001		Emergency Button	1		
3	568333010030		Button	1		
4	568333010032		Button	1		
5	568333010031		Button	1		
6	921100100070		Display	1		
7	920200800031		Rocker Switch	1		
8	920200800032		Rocker Switch	1		
9	920200100021		Emergency Button	1		
10	920200800007		Rocker Switch	1		
11	910200400017		Screw	8		
12	568310020000		Mounting Plate	4		
13	920200200027		Coded Lock	1		
14	940400400001		Cage Nut	8		
15	910200300005		Screw	8		

02 Working light (568346034501)

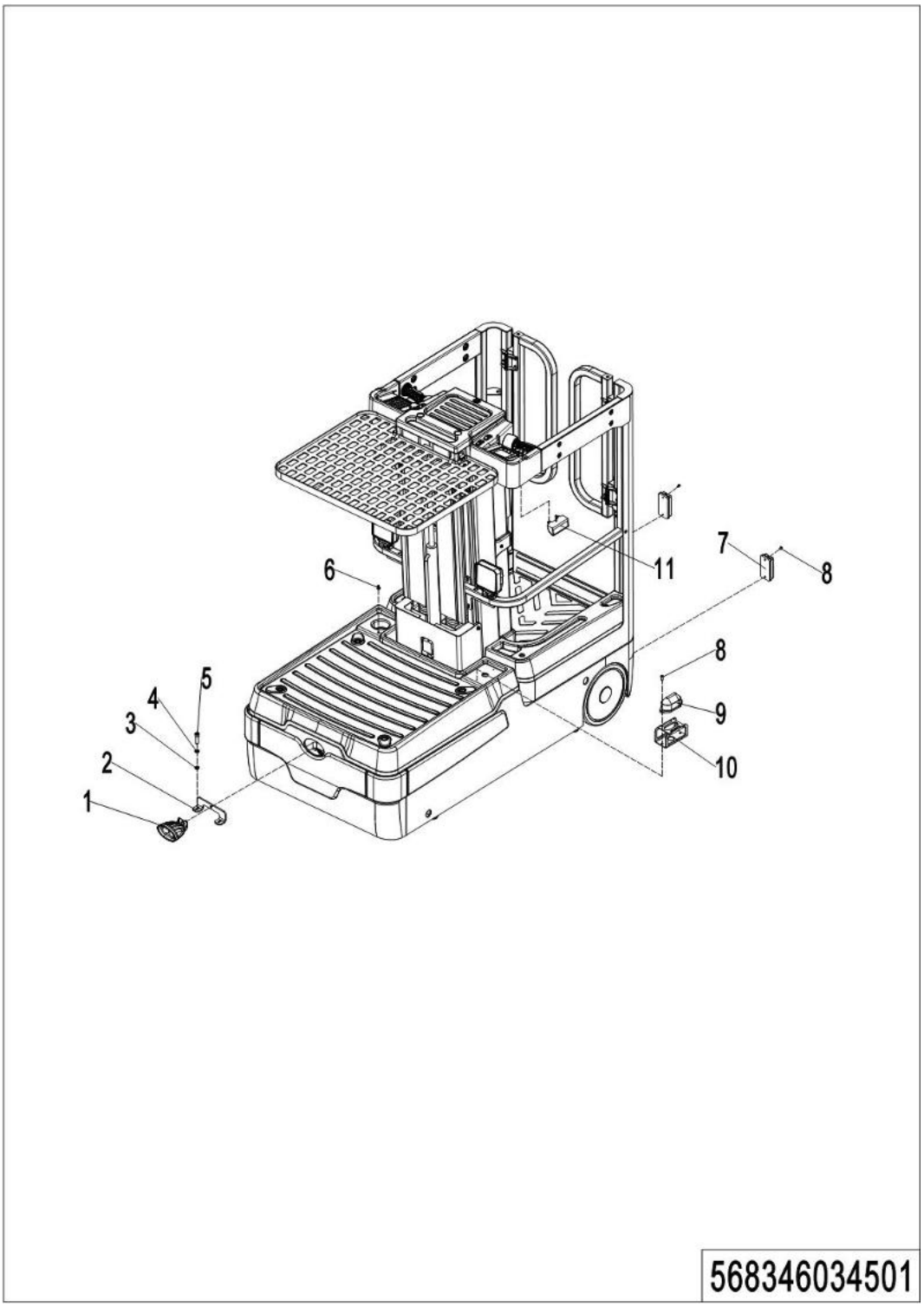

02 Working light (568346034501)

No.	Item Code	Mark	Item Description	Qty.	Substitute	Note
1	568333010028		Lamp	1		
2	568334520001		Mounting Base	1		
3	910400100005		Flat Washer	2		
4	910400500005		Spring Washer	2		
5	910200200035		Screw	2		
6	922000100024		Lamp Holder	1		
7	568333010029		Lamp	1		
8	910200500024		Screw	6		
9	602035510001		Lamp	1		
10	602021510003		Lamp Holder	1		
11	568333010025		Lamp	2		

03 Working light-N2 (568346034502)

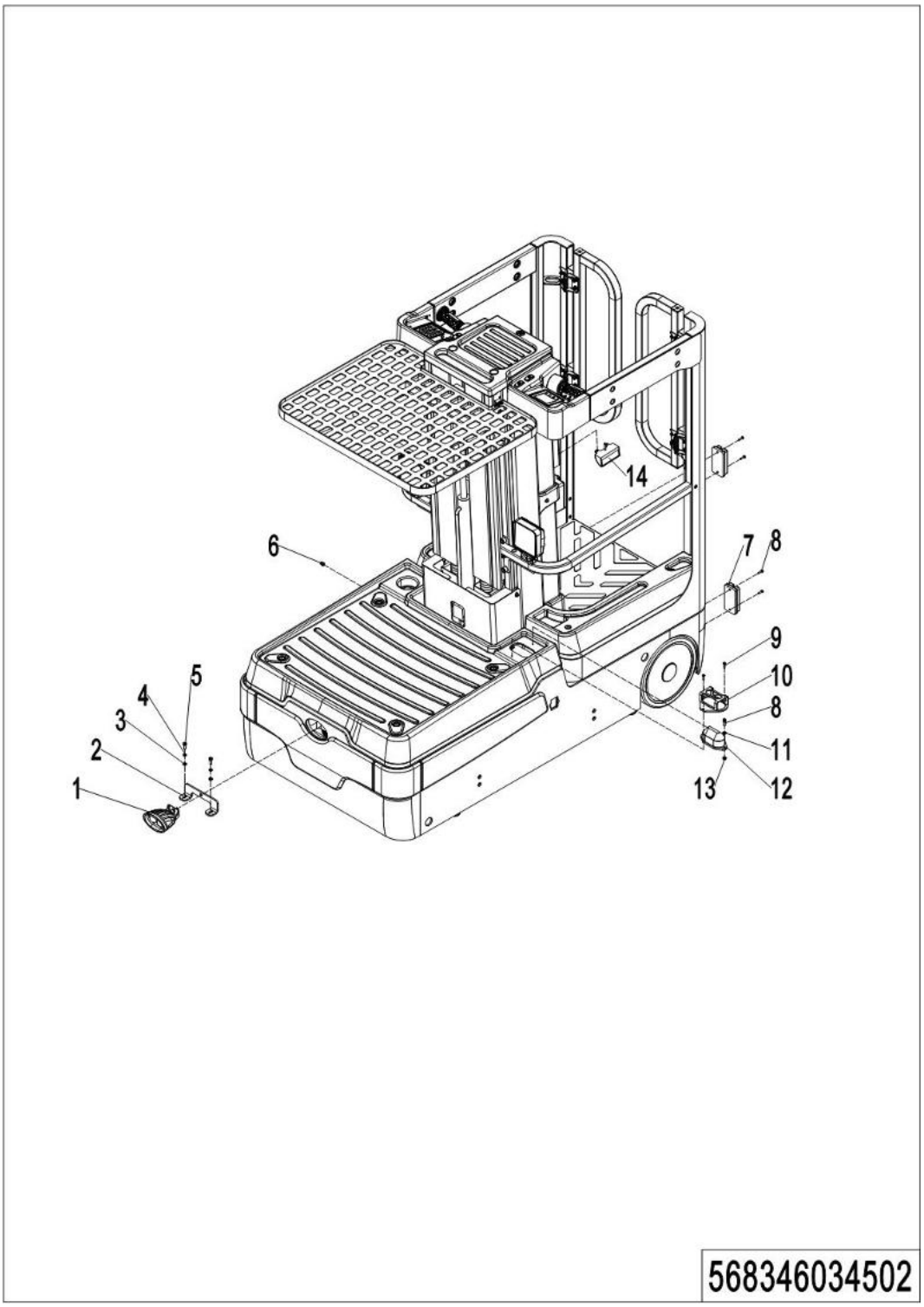

03 Working light-N2 (568346034502)

No.	Item Code	Mark	Item Description	Qty.	Substitute	Note
1	568333010028		Lamp	1		
2	568334520001		Mounting Base	1		
3	910400100005		Flat Washer	2		
4	910400500005		Spring Washer	2		
5	910200200035		Screw	2		
6	922000100024		Lamp Holder	1		
7	568333010029		Lamp	1		
8	910200500024		Screw	6		
9	910200300005		Screw	2		
10	568334510000		Lamp Holder	1		
11	910400100003		Flat Washer	2		
12	602035510001		Lamp	1		
13	910300100003		Nut	2		
14	568333010025		Lamp	2		

04 floodlight (568346035001)

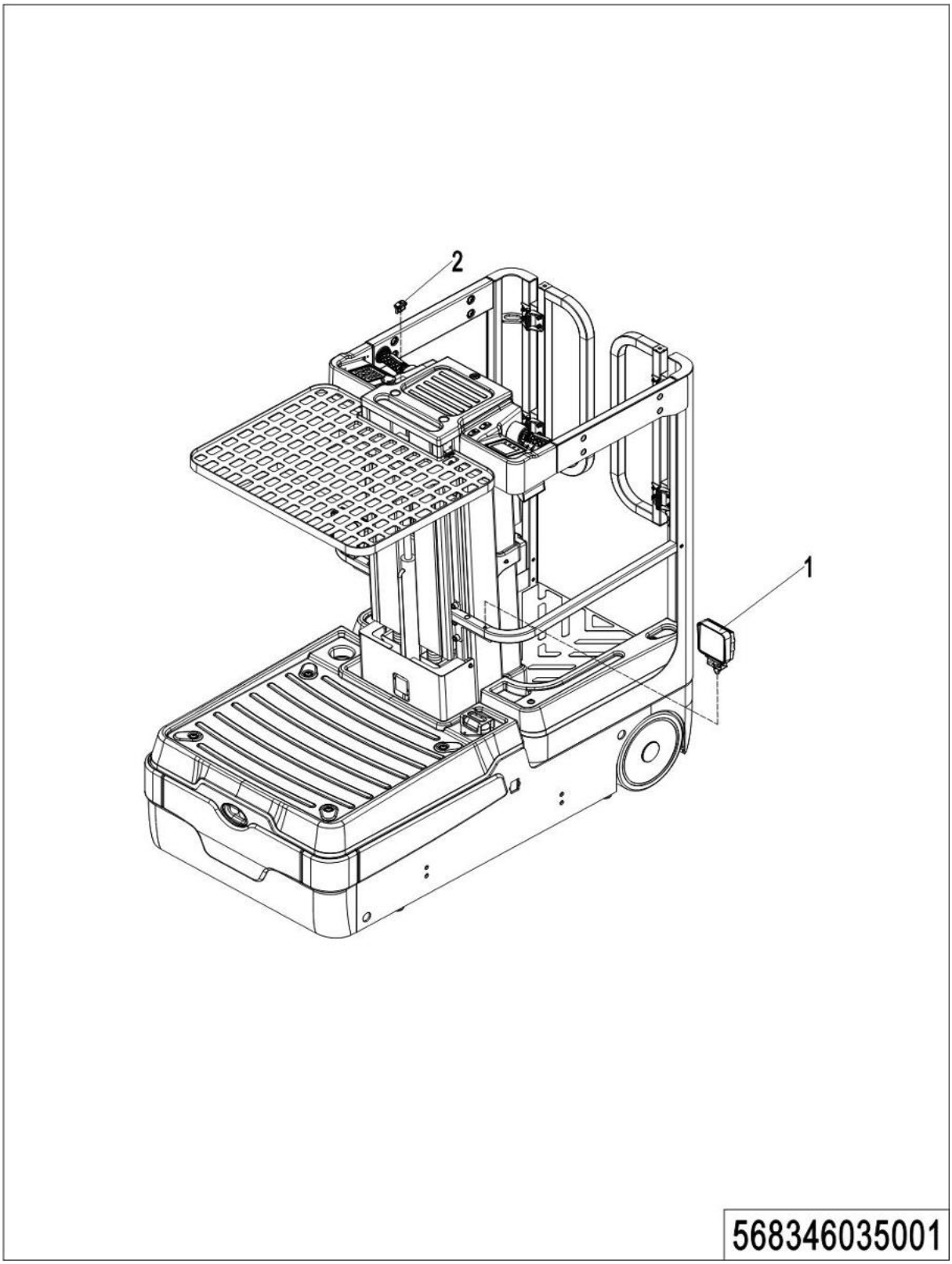

04 floodlight (568346035001)

No.	Item Code	Mark	Item Description	Qty.	Substitute	Note
1	922000100048		Lamp	2		
2	920200800031		Rocker Switch	1		

05 Charger (568346036501)

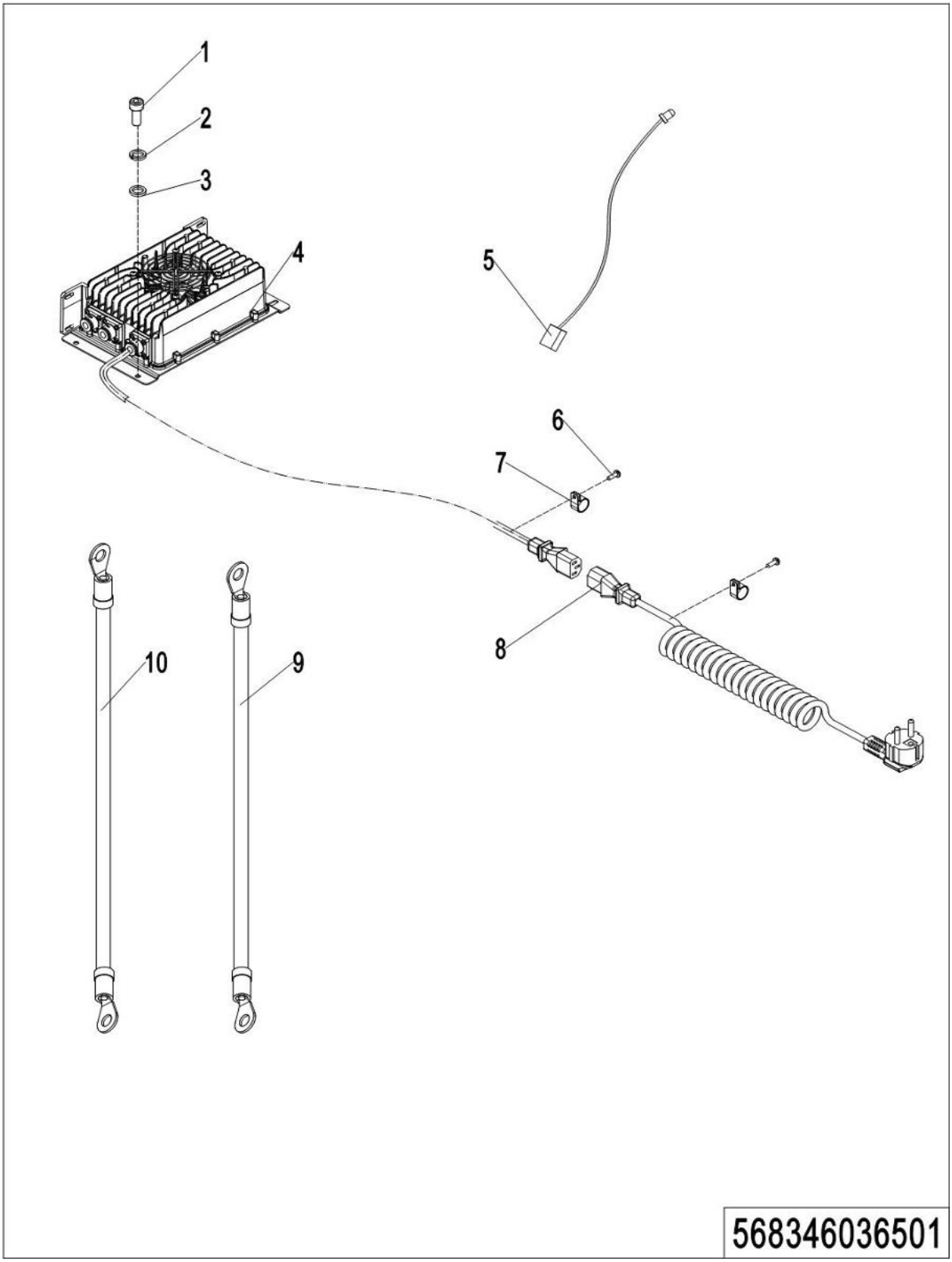

05 Charger (509046036501)

No.	Item Code	Mark	Item Description	Qty.	Substitute	Note
1	910200200033		Screw	4		
2	910400500005		Spring Washer	4		
3	910400100005		Flat Washer	4		
4	921000100055		Charger24V12V	1		
4	921000100052		Charger 24V25A	1		Li
5	532298510006		Wire Harness	1		
6	910200300005		Screw	2		
7	921300200002		Cable Clamp	1		
8	921500200008		Spring Cable(Asia)	1		
8	921500200005		Spring Cable(EU)	1		
8	921500200003		Spring Cable(AUS)	1		
8	921500200004		Spring Cable(ENG)	1		
8	921500200002		Spring Cable(USA)	1		
8	921500200037		Spring Cable(ARG)	1		
8	921500200006		Spring Cable(ITY)	1		
8	921500200007		Spring Cable(SWD)	1		
8	921500200029		Spring Cable(ISR)	1		
8	921500200061		Spring Cable(BRA)	1		
8	921500200065		Spring Cable(ZA)	1		
8	921500200066		Spring Cable(IND)	1		
8	921500200067		Spring Cable	1		
8	921500200068		Spring Cable	1		
9	568333010017		Cable	1		
10	568333010018		Cable	1		

06 Traction battery (568346037001)

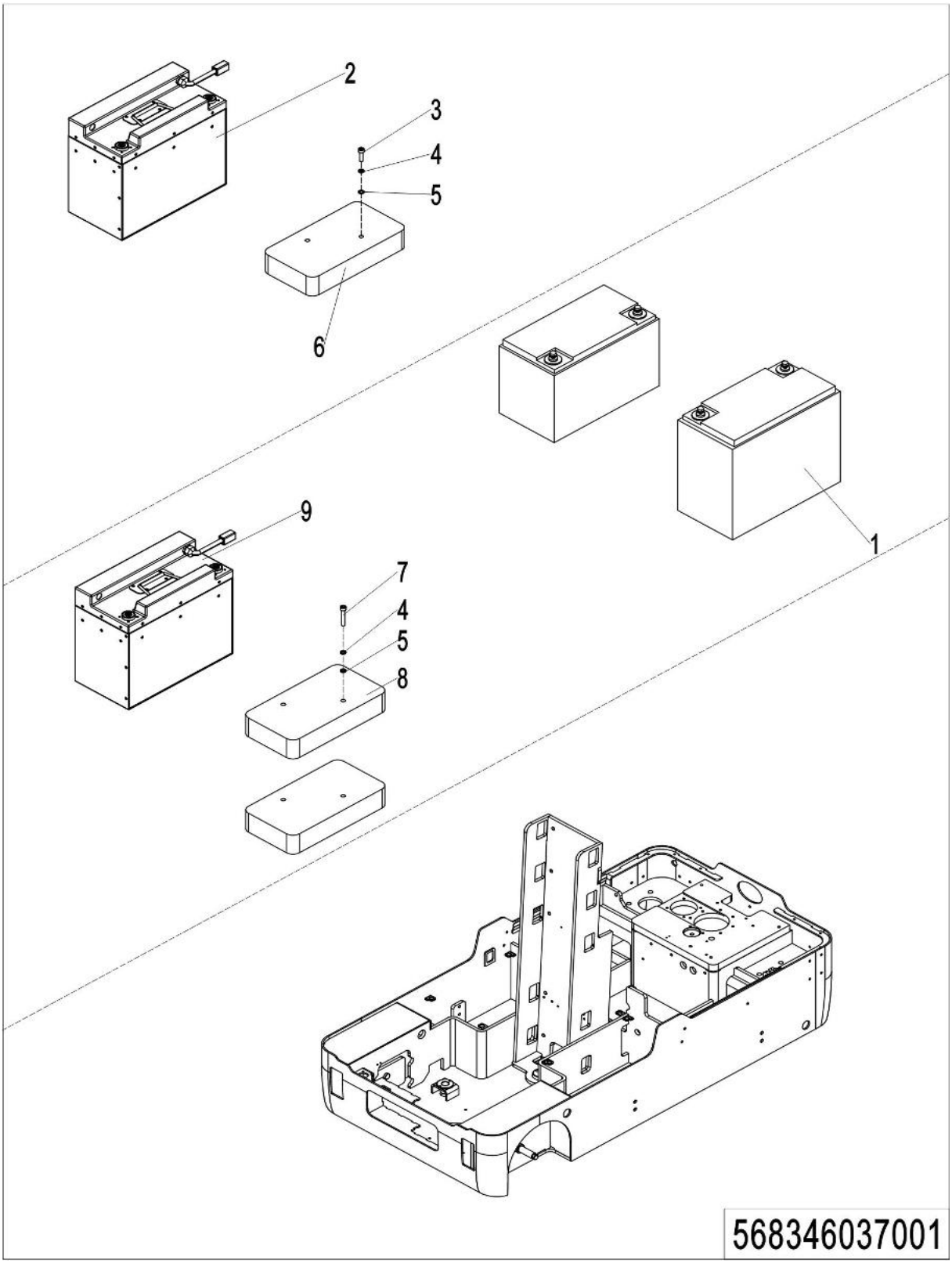

06 Traction battery (509046037001)

No.	Item Code	Mark	Item Description	Qty.	Substitute	Note
1	920600100081		Battery 12V100Ah	2		LS
1	920600100107		Battery 12V106Ah	2		TN
2	920600100166		Li Battery 24V80Ah	1		HF
3	910100300032		Bolt	2		
4	910400500006		Spring Washer	2		
5	910400100006		Flat Washer	2		
6	568337020000		Balance Weight	1		
7	910100300091		Screw	2		Li Battery 24V100Ah
8	568337020001		Balance Weight	2		Li Battery 24V100Ah
9	920600100445		Li Battery 24V100Ah	1		Foddell

07 Traction battery-N2 (568346037002)

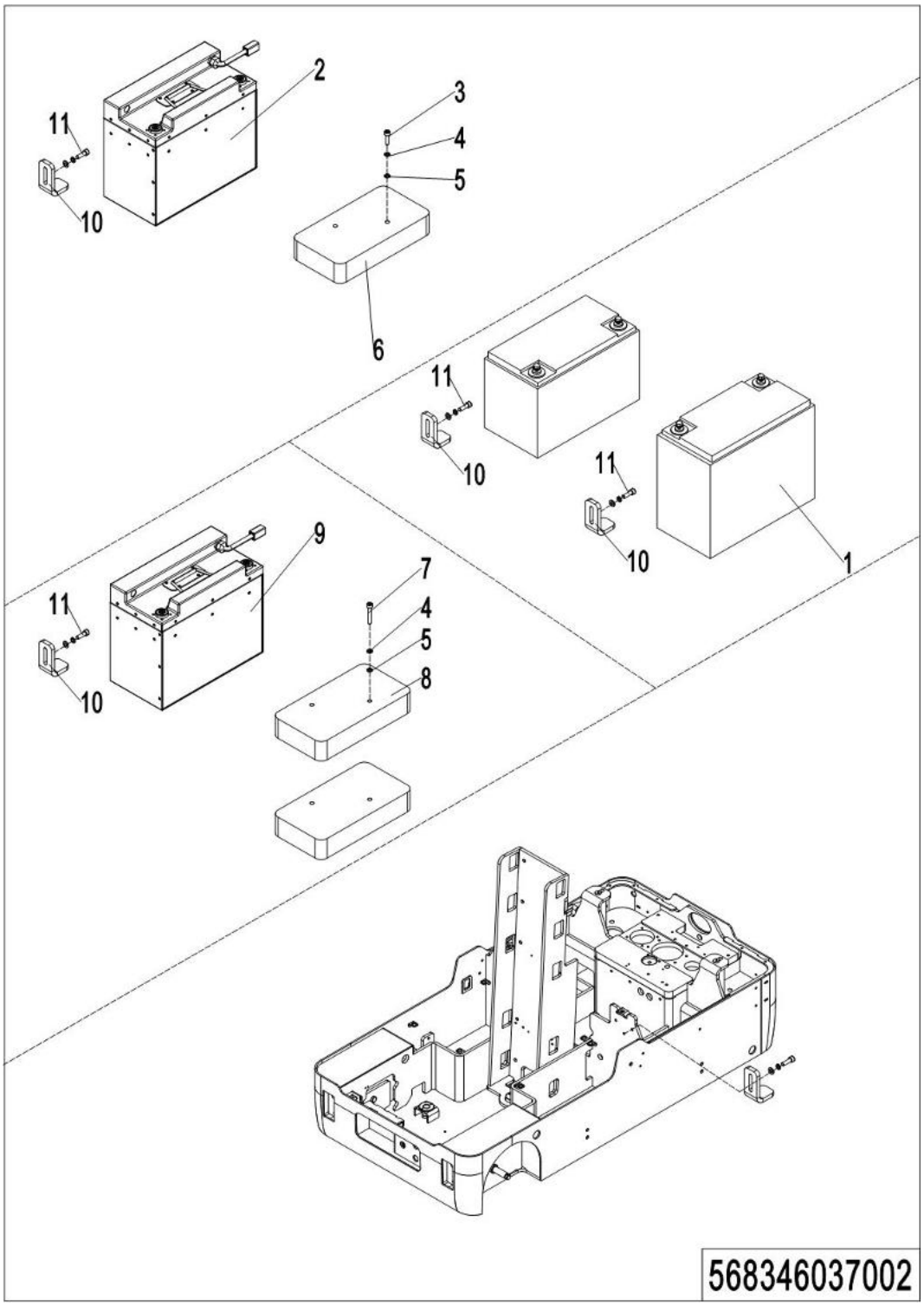

07 Traction battery-N2 (509046037002)

No.	Item Code	Mark	Item Description	Qty.	Substitute	Note
1	920600100081		Battery 12V100Ah	2		LS
1	920600100107		Battery 12V106Ah	2		TN
2	920600100166		Li Battery 24V80Ah	1		HF
3	910100300032		Bolt	2		
4	910400500006		Spring Washer	4		
5	910400100006		Flat Washer	4		
6	568337020000		Balance Weight	1		
7	910100100029		Screw	2		Li Battery 24V100Ah
8	568337020001		Balance Weight	2		Li Battery 24V100Ah
9	920600100445		Li Battery 24V100Ah	1		Foddell
10	568337020002		Mounting Plate	2		
10	568337020002		Mounting Plate	1		Li Battery
11	910200200057		Screw	4		
11	910200200057		Screw	2		Li Battery

08 Controller，F2C+1220E (568346033001)

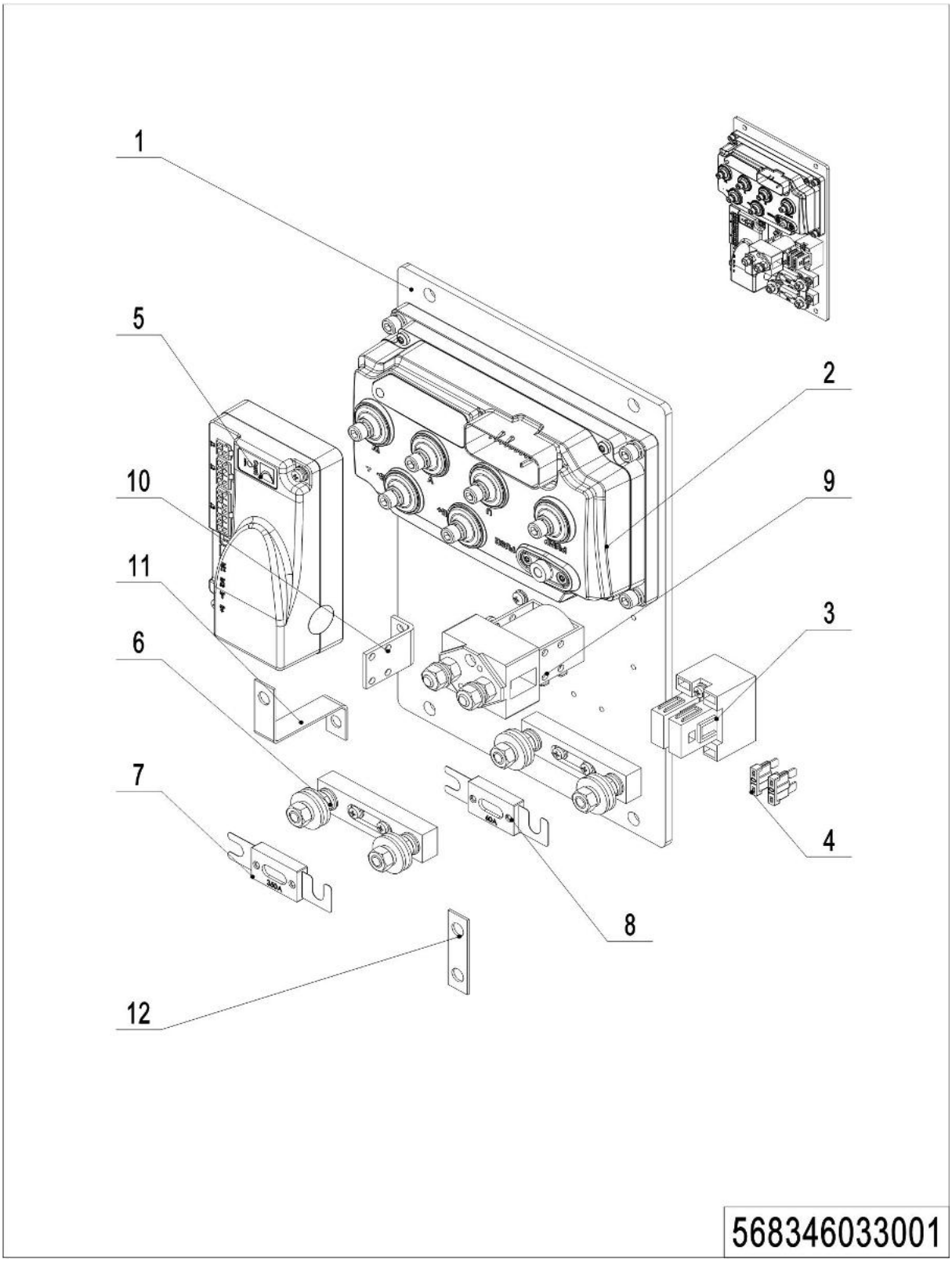

08 Controller，F2C+1220E (568346033001)

No.	Item Code	Mark	Item Description	Qty.	Substitute	Note
1	568333020001		Mounting Plate	1		
2	921400100124		Controller	1		
3	920100400005		Fuse Holder	1		
4	920100200002		Fuse	1		
5	921400100077		Controller	1		
6	920100400002		Fuse Holder	2		
7	920100100003		Fuse	1		
8	920100100008		Fuse	1		
9	920700100004		Relay	1		
10	921300400001		Mounting Plate	1		
11	505633020002		Copper Busbar	1		
12	505633020003		Copper Busbar	1		

09 Charger，(568346033002)

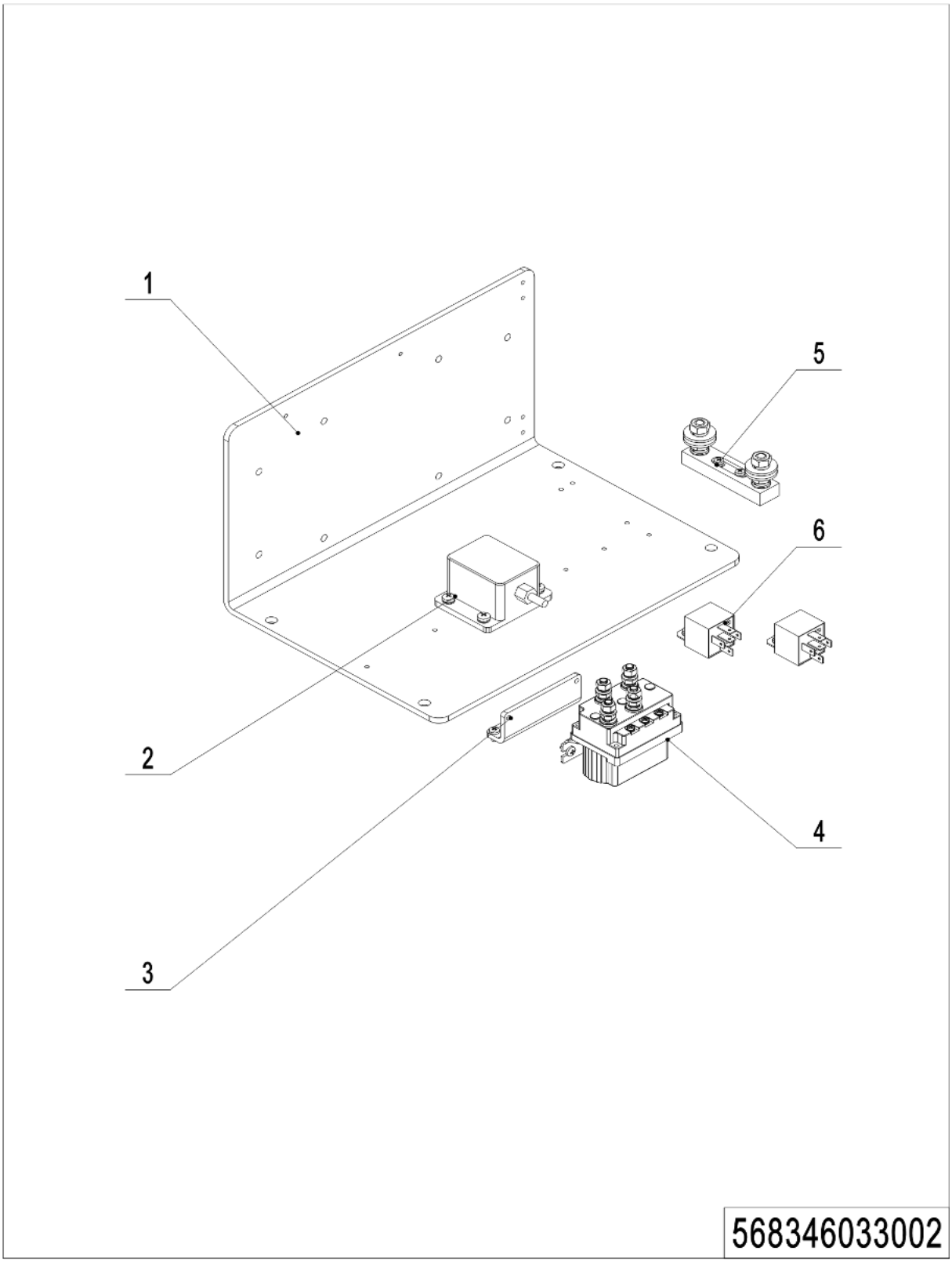

09 Charger，(568346033002)

No.	Item Code	Mark	Item Description	Qty.	Substitute	Note
1	568333020002		Mounting Plate	1		
2	568333010033		Sensor	1		
3	568333020003		Mounting Plate	1		
4	920700100019		Relay	1		
5	920100400002		Fuse Holder	1		
6	920800100011		Relay	2		

10 Wire Harness，F2A +1220E (568346033003)

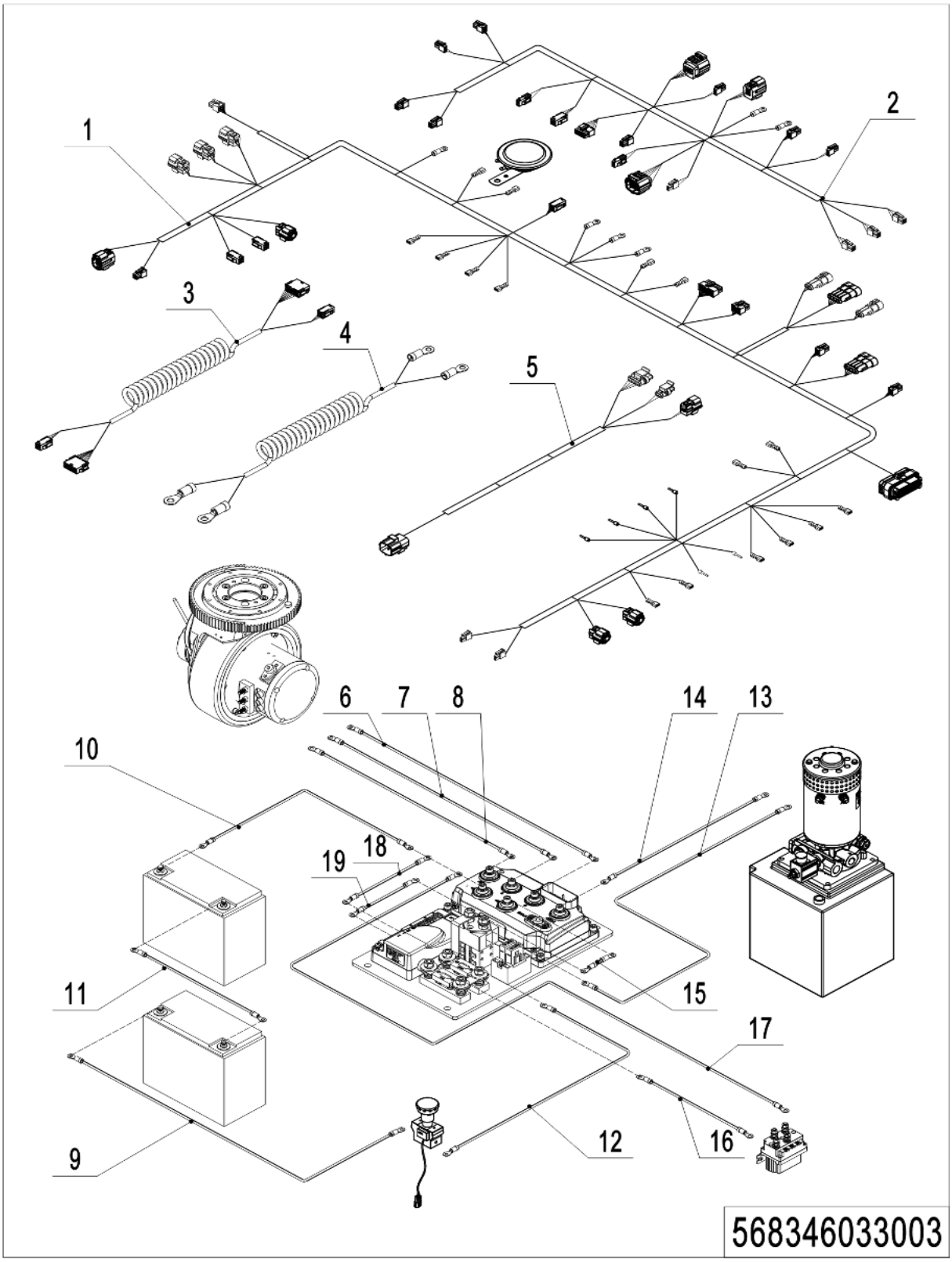

10 Wire Harness，F2A +1220E (568346033003)

No.	Item Code	Mark	Item Description	Qty.	Substitute	Note
1	568333010000		Wire Harness	1		
2	568333010001		Wire Harness	1		
3	568333010002		Spring Cable	1		
4	568333010003		Spring Cable	1		
5	568333010004		Wire Harness	1		
6	568333010005		Cable	1		
7	568333010006		Cable	1		
8	568333010007		Cable	1		
9	568333010008		Cable	1		
10	568333010009		Cable	1		
11	568333010010		Cable	1		
12	568333010011		Cable	1		
13	568333010012		Cable	1		
14	568333010013		Cable	1		
15	568333010014		Cable	1		
16	568333010015		Cables	1		
17	568333010016		Cables	1		
18	568333010019		Cables	1		

11 Wire Harness，F2A +1220E +Li (568346033004)

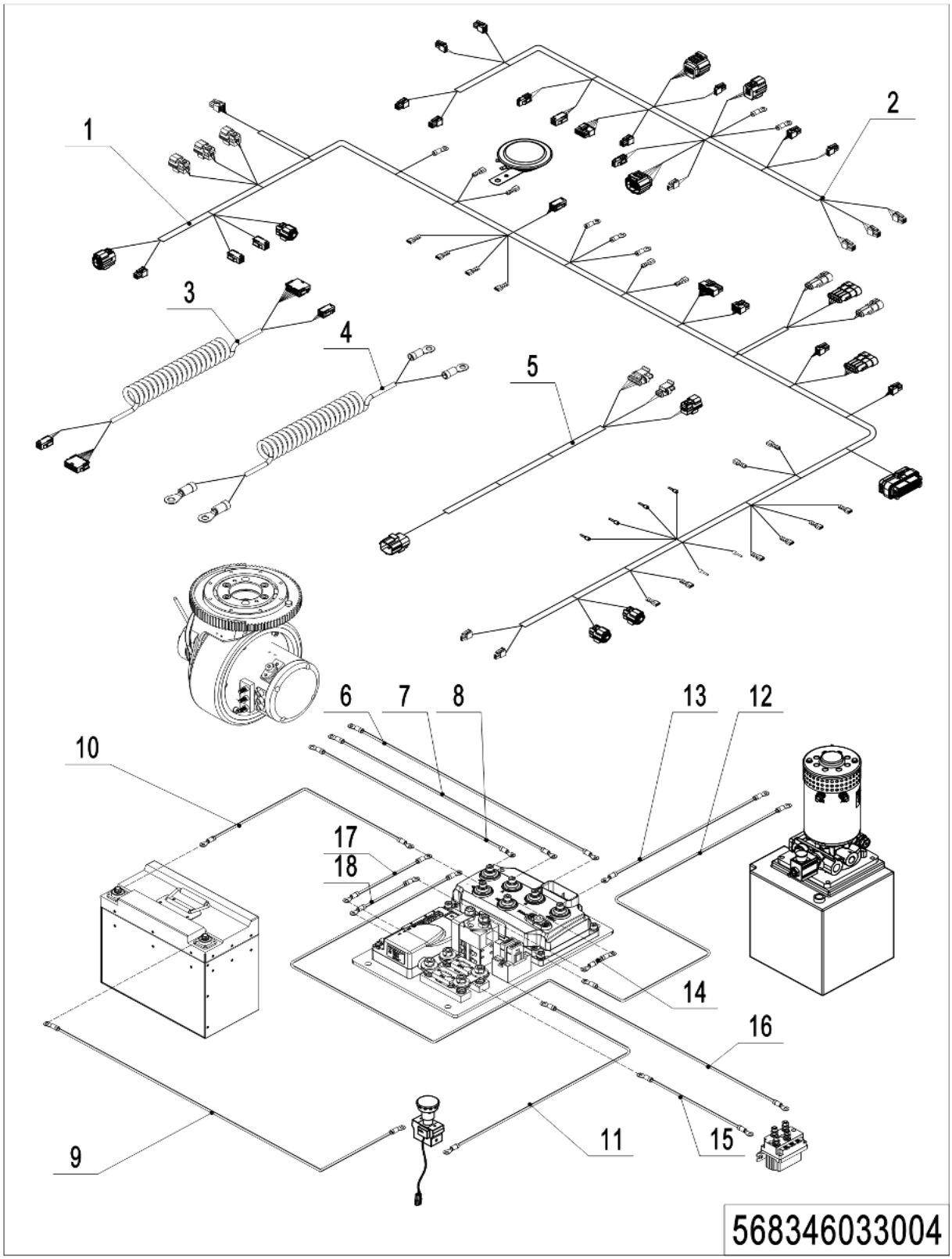

11 Wire Harness，F2A +1220E +Li (568346033004)

No.	Item Code	Mark	Item Description	Qty.	Substitute	Note
1	568333010036		Wire Harness	1		
2	568333010037		Wire Harness	1		
3	568333010038		Spring Cable	1		
4	568333010003		Spring Cable	1		
5	568333010004		Wire Harness	1		
6	568333010005		Cable	1		
7	568333010006		Cable	1		
8	568333010007		Cable	1		
9	568333010008		Cable	1		
10	568333010009		Cable	1		
11	568333010011		Cable	1		
12	568333010012		Cable	1		
13	568333010013		Cable	1		
14	568333010014		Cable	1		
15	568333010015		Cables	1		
16	568333010016		Cables	1		
17	568333010019		Cables	1		
18	568333010035		Cables			

Chapter 8: Others

01 Labels (568346047001)

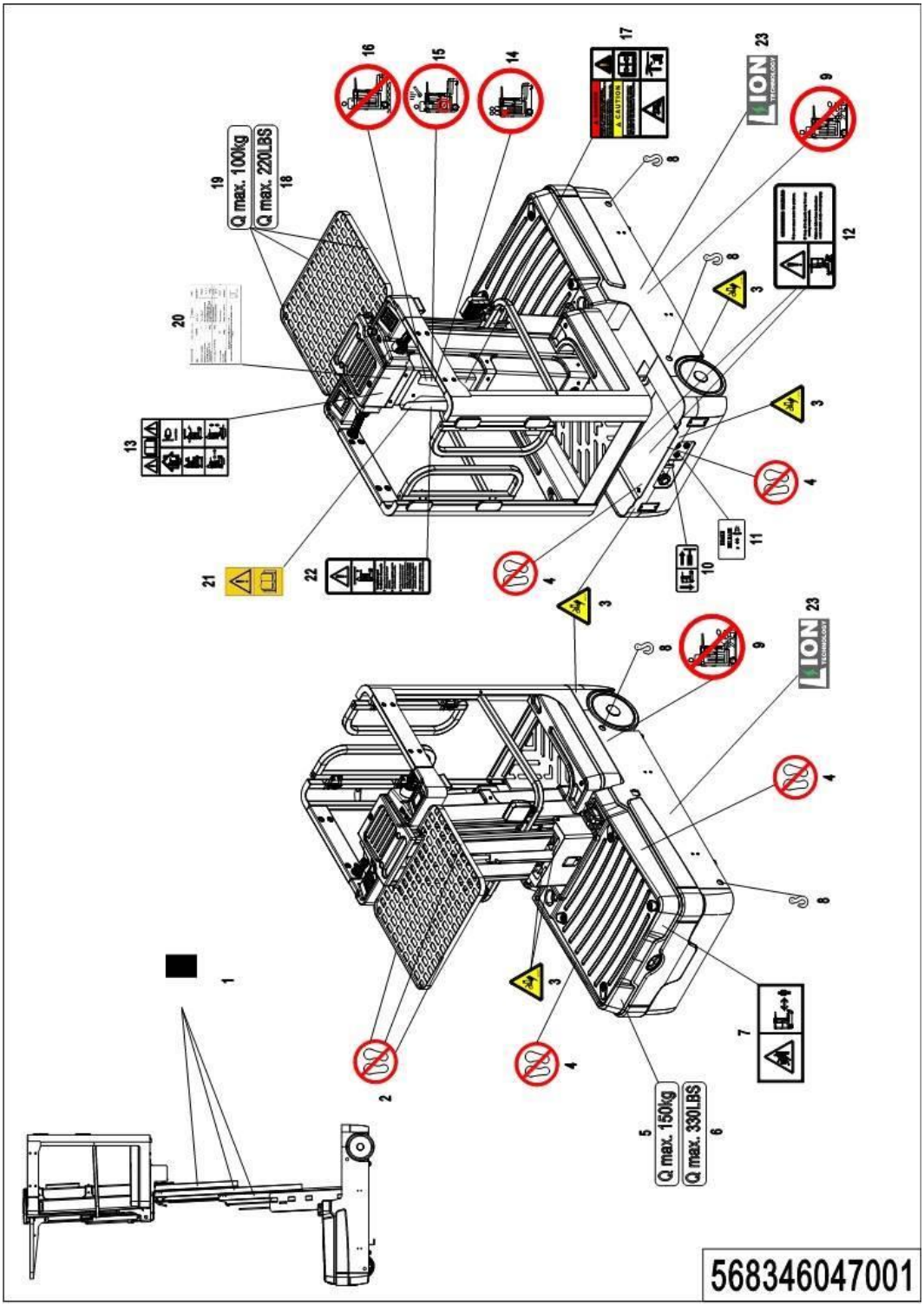

01 Labels (568346047001)

No.	Item Code	Mark	Item Description	Qty.	Substitute	Note
1	610047020038		Label	1		
2	568347020007		Label	3		
3	568347020015		Label	1		
4	568347020014		Label	6		
5	941200200059		Label	1		
6	941200200061		Label	1		
7	568347020004		Label	1		
8	941200300001		Label	4		
9	568347020008		Label	2		
10	568347020012		Label	1		
11	568347020013		Label	1		
12	568347020005		Label	2		
13	568347020020		Label	1		
14	568347020011		Label	1		
15	568347020010		Label	1		
16	568347020009		Label	1		
17	568347020002		Label	1		
18	941200200060		Label	1		
19	941200200058		Label	1		
20	568347020001		Truck data plate	1		
21	941200300002		Label	1		
22	568347020003		Label	1		
23	532247020002		Label	1		

Appendix

01 Hydraulic Circuit Diagram (568346045501)

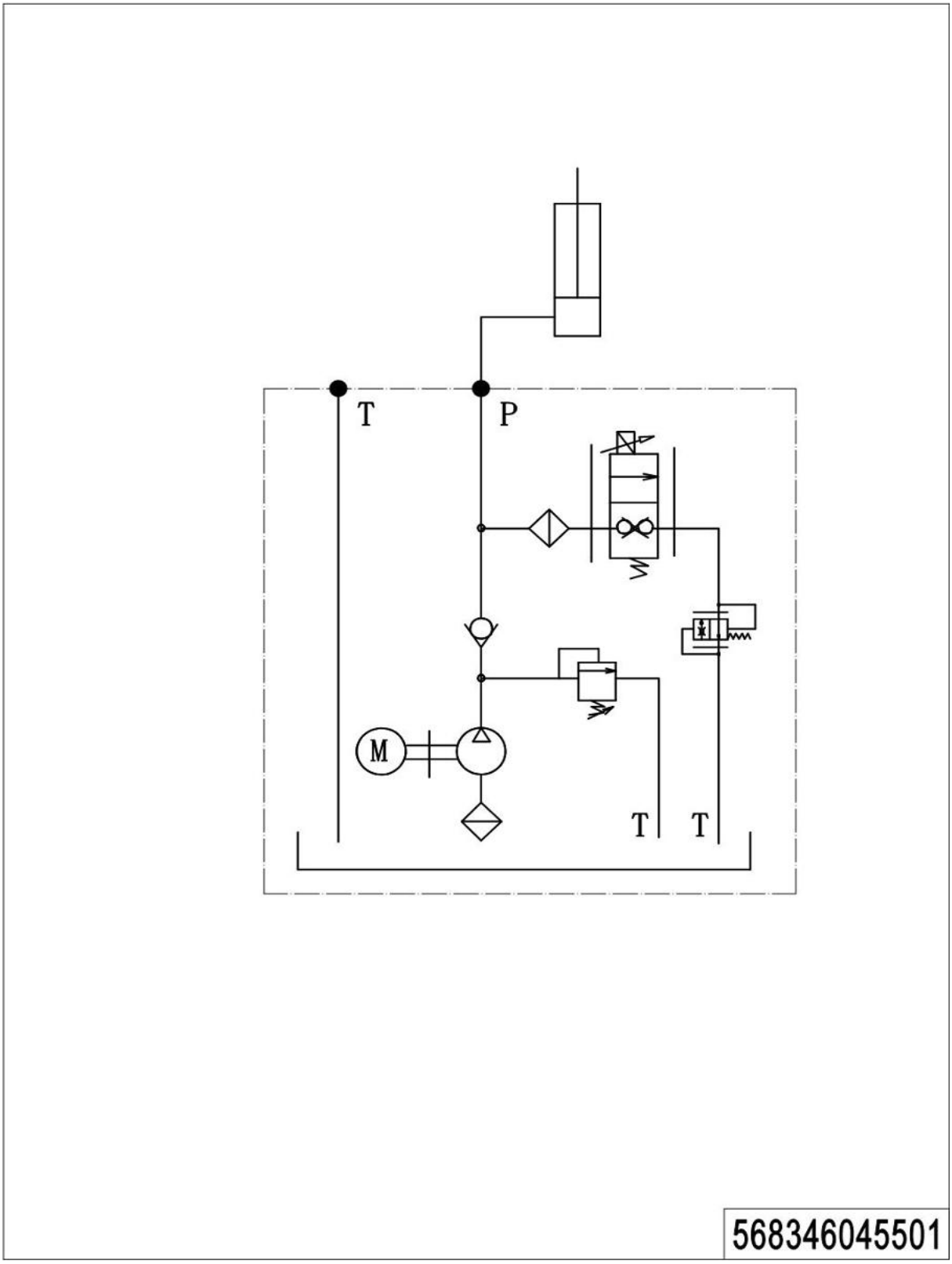

02 Hydraulic Circuit Diagram (568346045502)

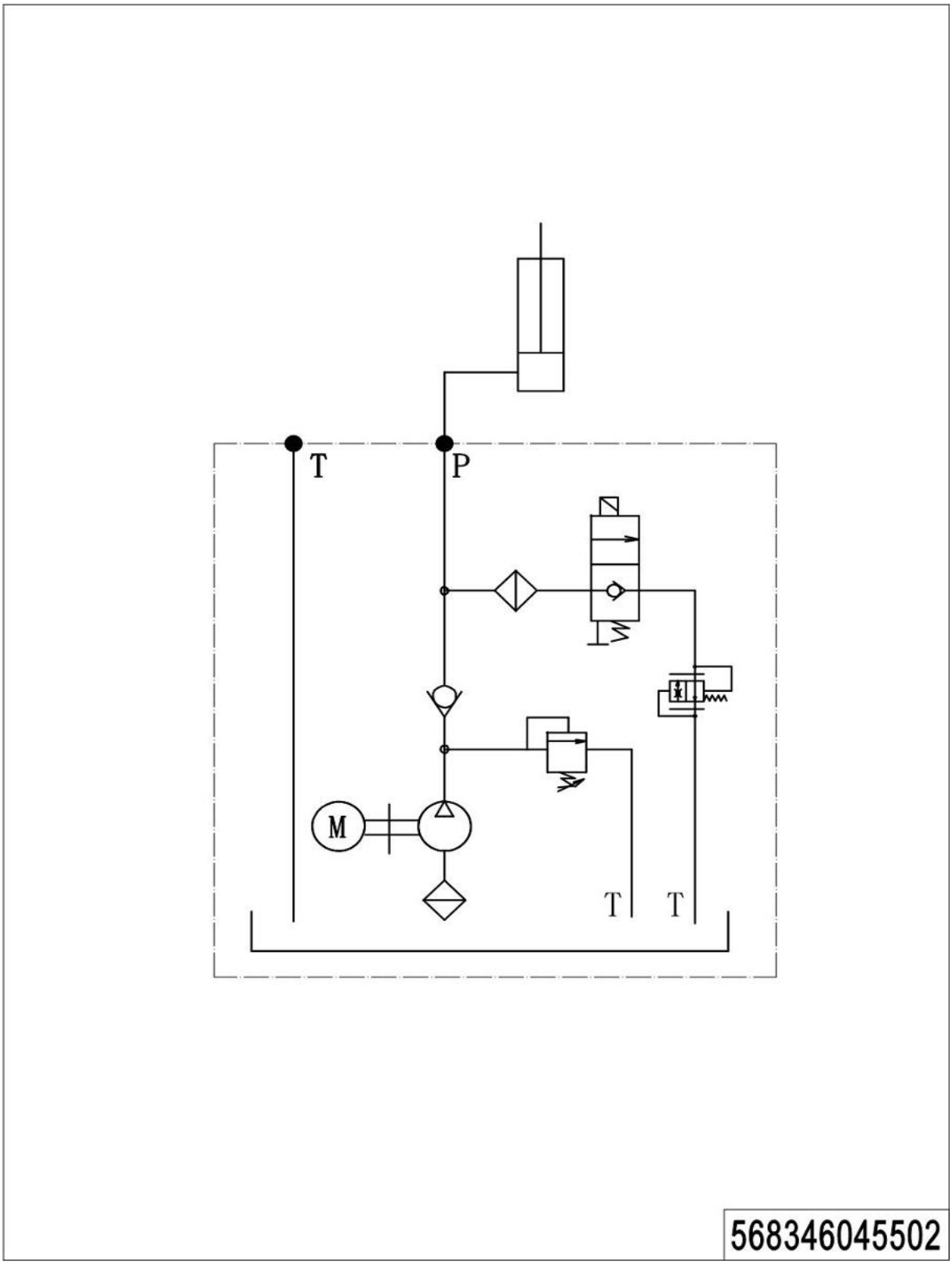

03 Hydraulic Circuit Diagram (568346045503)

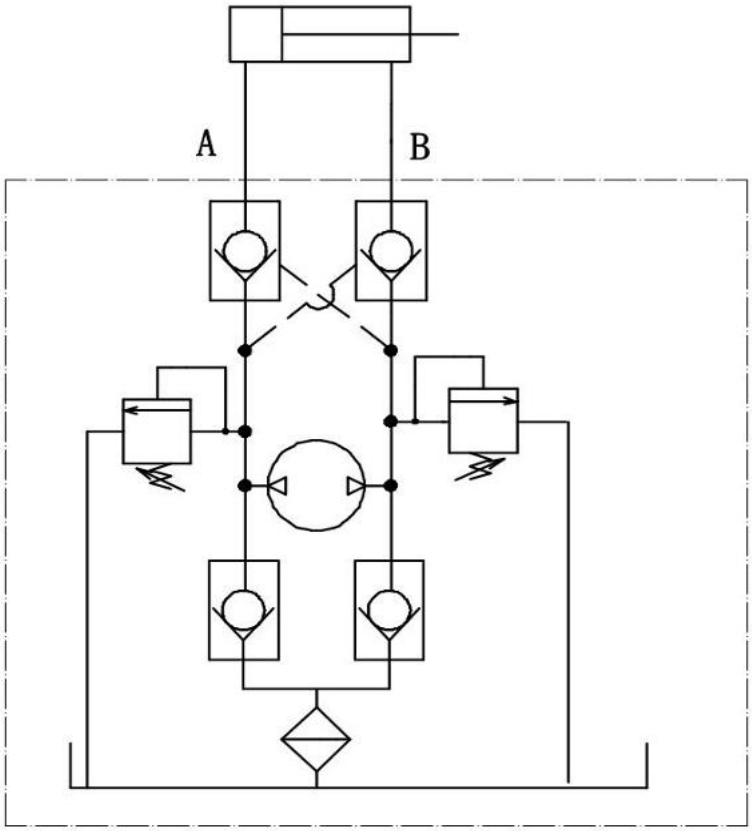

568346045503

04 Electrical Circuit Diagram，F2C +1220E (568346045504)

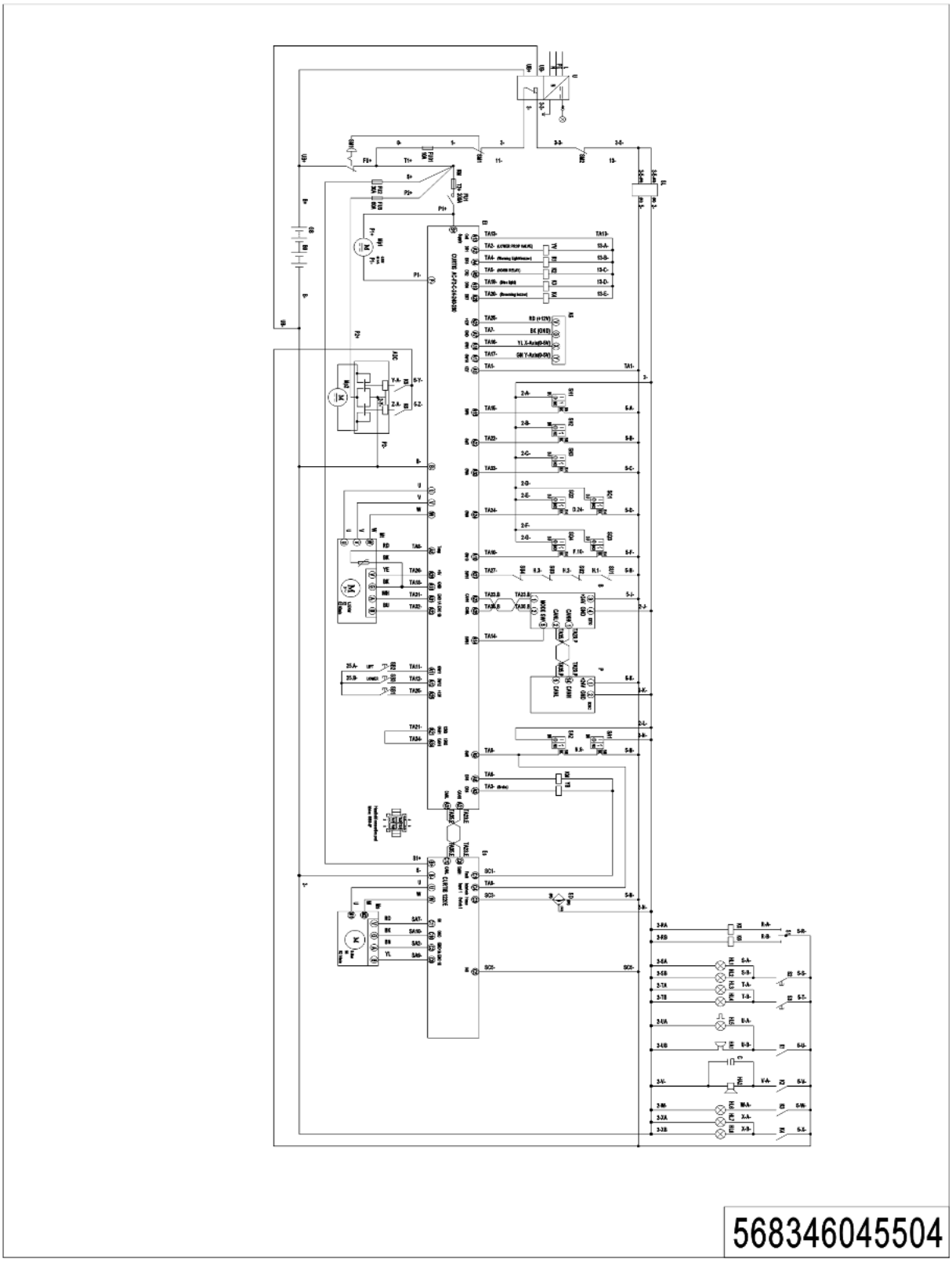

05 Electrical Circuit Diagram，F2C +1220E+Li (568346045505)

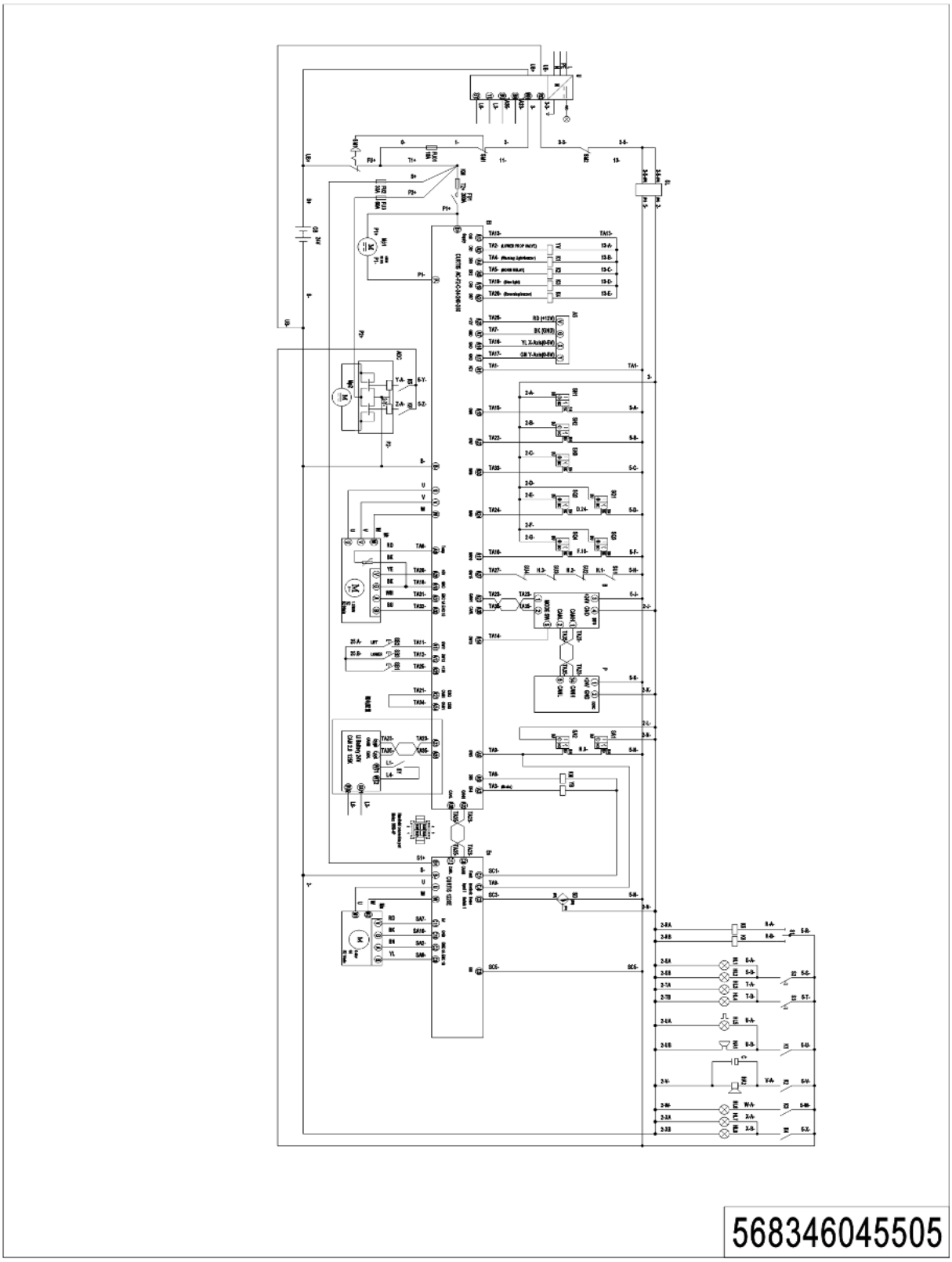

06 Electrical Circuit Diagram，F2C +1220E (568346045506) （potentiometer）

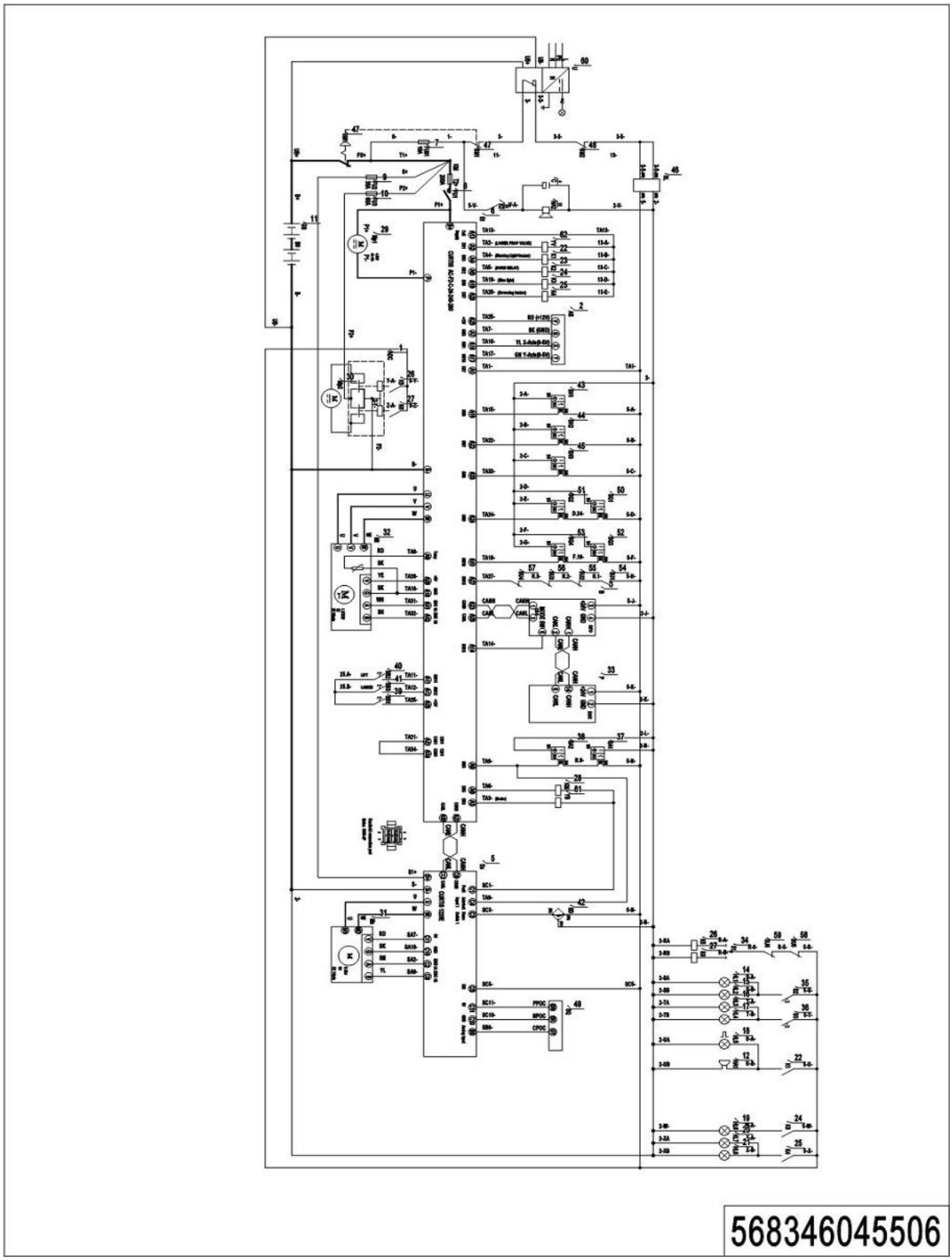

07 Electrical Circuit Diagram , F2C+1220E+Li (568346045507) （potentiometer）

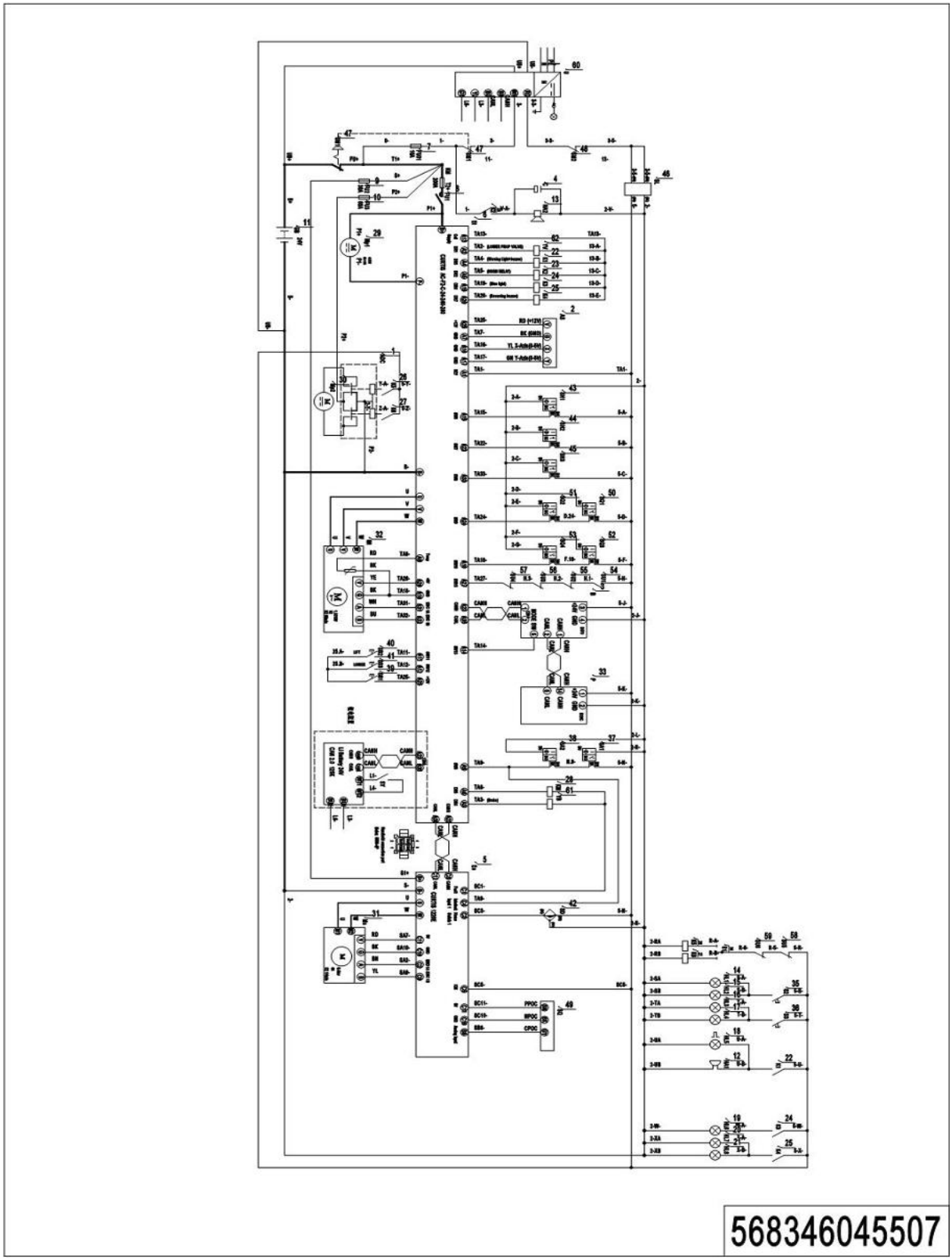

08 Consumable Parts List

No.	Item Code	Item Description	Qty.	Chapter/ Section/ Number
1	961001300010	Wheel	1	Chapter 1/02/15
2	568398520084	Seal Kit	1	Chapter 2/01/14. 01 Chapter 2/02/14. 01
3	568398520086	Carbon Brush	1	Chapter 2/03/2. 01
4	568398520085	Seal Kit	1	Chapter 2/04/1. 01
5	568398520087	Carbon Brush	1	Chapter 2/05/1. 01
6	910700200017	Bearing	4	Chapter 4/01/05
7	910700200019	Bearing	6	Chapter 5/01/52 Chapter 6/04/02
7	910700200019	Bearing	4	Chapter 6/05/1. 02 Chapter 6/06/23. 02
8	940500100002	Bushing	4	Chapter 6/06/18
9	920100200002	Fuse 10A	1	Chapter 7/08/04
10	920100100003	Fuse 60A	1	Chapter 7/08/07
11	920100100008	Fuse 200A	1	Chapter 7/08/08