Print Number：　　Print Date：

NOBLELIFT

Scan QR Code for More

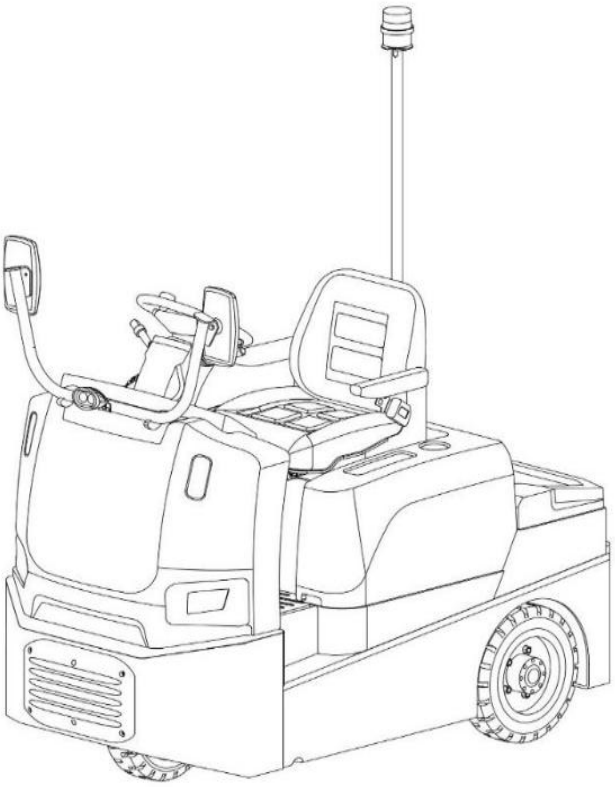

Electric Tow Tractor T30Q

PARTS MANUAL

230846020101

Version：V02

Truck Identification Number From：

Parts Manual

T30Q-PM02EN

Please order spare parts from authorized dealers of our company.
In order to avoid wrong delivery, all the orders for spare parts should specify the following items:
- Truck model, identification number and manufacture year.
- Orders for spare parts of mast, hydraulic transmission unit, steering axle, motor, etc. shall indicate the manufacture number of these parts.
- Codes for our company spare parts are shown in the table of parts manual. Please also pay attention to the description of supply status, order quantity, etc. (check the number listed in "Mark" column of the parts manual).

"Mark" Column:
The unmarked indicates the parts are in short supply cycle.
Number 1: supply as package. Indicating these that parts are small parts and seal parts, which are supplied in package unit and in short supply cycle.
Number 2: supply with constraints. Indicating that these spare parts are not in stock and will be prepared for production after receiving the order from customers, which are in long supply cycle.
Number 3: phasing-out supply. Indicating that these parts will be replaced by new parts due to technical improvements and the current stock will not be available when these parts run out. Please check the description of technical improvements notice.
Number 4: supply as assembly. Indicating that these parts are assembly parts defined by manufacture process, which cannot be supplied as a single part.
Number 5: check other tables.

This parts manual is the property of our company and can be shared under the confidential agreement only, our company has the right to claim for compensation of any unauthorized use. Copy without permission is not allowed. Figures in the manual are not limited by the original design. our company reserves the right to improve the products for continuous technology progress.

Table of Contents

Chapter 1: Control panel 1
01 Control Panel Assembly (230846010001) 1
Chapter 2: Braking System 3
01 Brake Assembly (230846011501) 3
Chapter 3: Steering System 5
01 Steering Mechanism (230846015501) 5
01 Steering Mechanism (230846015501) Continuation 7
02 Steering Wheel Components (230846015502) 9
Chapter 4: Chassis System 11
01 Chassis Assembly (230846021501) 11
01 Chassis Assembly (230846021501) Continuation 13
02 Battery Cover Assembly (230846021001) 15
02 Battery Cover Assembly (230846021001) Continuation 17
03 Warning Light Assembly (230846035501) 19
04 Coupling (230846039501) 21
05 Rearview Mirror Assembly (230846049501) 23
06 Pedal Assembly (230846018001) 25
Chapter 5: Drive System 27
01 Drive Motor System (230846013501) 27
02 Gearbox Assembly (230846013502) 29
03 Drum Brake Assembly (230846013503) 31
Chapter 6: Electrical Parts 33
01 Electronic Control Components (230846033001) 33
02 Wire Harness (230846033002) 35
03 Electronic Control Components (Curtis) (230846033003) 37
04 Wire Harness (Curtis) (230846033004) 39
05 Charger (230846036501) 41
06 Traction Battery (230846037001) 43
Chapter 7: Others 45
01 Labels and Decals (230846047002) 45
Appendix 47
01 Electrical diagram (QT controller) (230846045501) 47
02 Electrical diagram (QT controller) with pin-code lock (230846045502) 48
03 Electrical diagram (Curtis controller) (230846045503) 49
04 Electrical diagram(Curtis controller)with pin-code lock(230846045504) 50
05 Electrical diagram (Curtis controller) (230846045505) 20CE 51
06 Electrical diagram(Curtis controller)with pin-code lock(230846045506) 20CE 52
07 Consumable Parts List 53

Chapter 1: Control panel

01 Control Panel Assembly (230846010001)

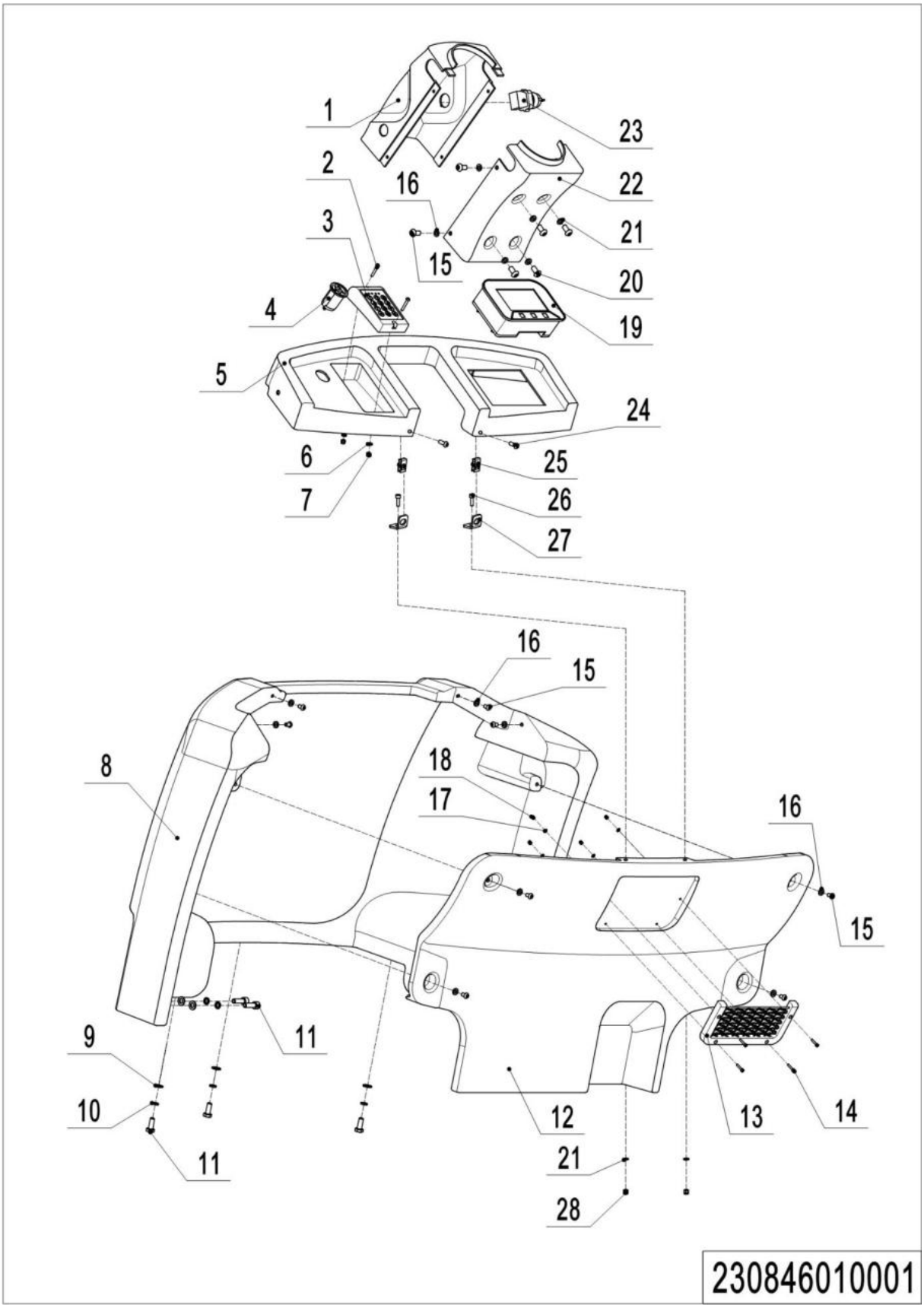

1= Supply as package. 2= Supply with constraints. 3= Phasing-out supply. 4= Supply as assembly. 5= Check other tables.

01 **Control Panel Assembly** (230846010001)

No.	Item Code	Mark	Item Description	Qty.	Substitute	Note
1	231010020101		Cover	1		
2	910200300009		Screw	2		matching
3	230833010009		Pin-code Lock	1		matching
4	921900100006		Converter	1		
5	230810020001		Protective Cover	1		
6	910400100003		Flat Washer	2		matching
7	910300500001		Nut	2		matching
8	230810020100		Protective Cover	1		
9	910400100006		Flat Washer	7		
10	910400500006		Spring Washer	7		
11	910100300022		Bolt	7		
12	230810020002		Protective Cover	1		
13	230810010000		String Bag	1		
14	910200200004		Screw	4		
15	910200300016		Screw	12		
16	910400100005		Flat Washer	12		
17	910400100002		Flat Washer	4		
18	910300500011		Nut	4		
19	921100100100		Display	1		QT
19	921100100063		Display	1		**Curtis**
20	910200300013		Screw	4		
21	910400100004		Flat Washer	6		
22	231010020100		Cover	1		
23	920200200025		Key Switch	1		
23	920200200028		Key Switch	1		lithium battery
24	910200300018		Screw	2		
25	940400400001		Cage Nut	2		
26	910200200023		Screw	2		
27	230810020003		Mounting Rack	2		
28	910300500002		Nut	2		

Chapter 2: Braking System

01 Brake Assembly (230846011501)

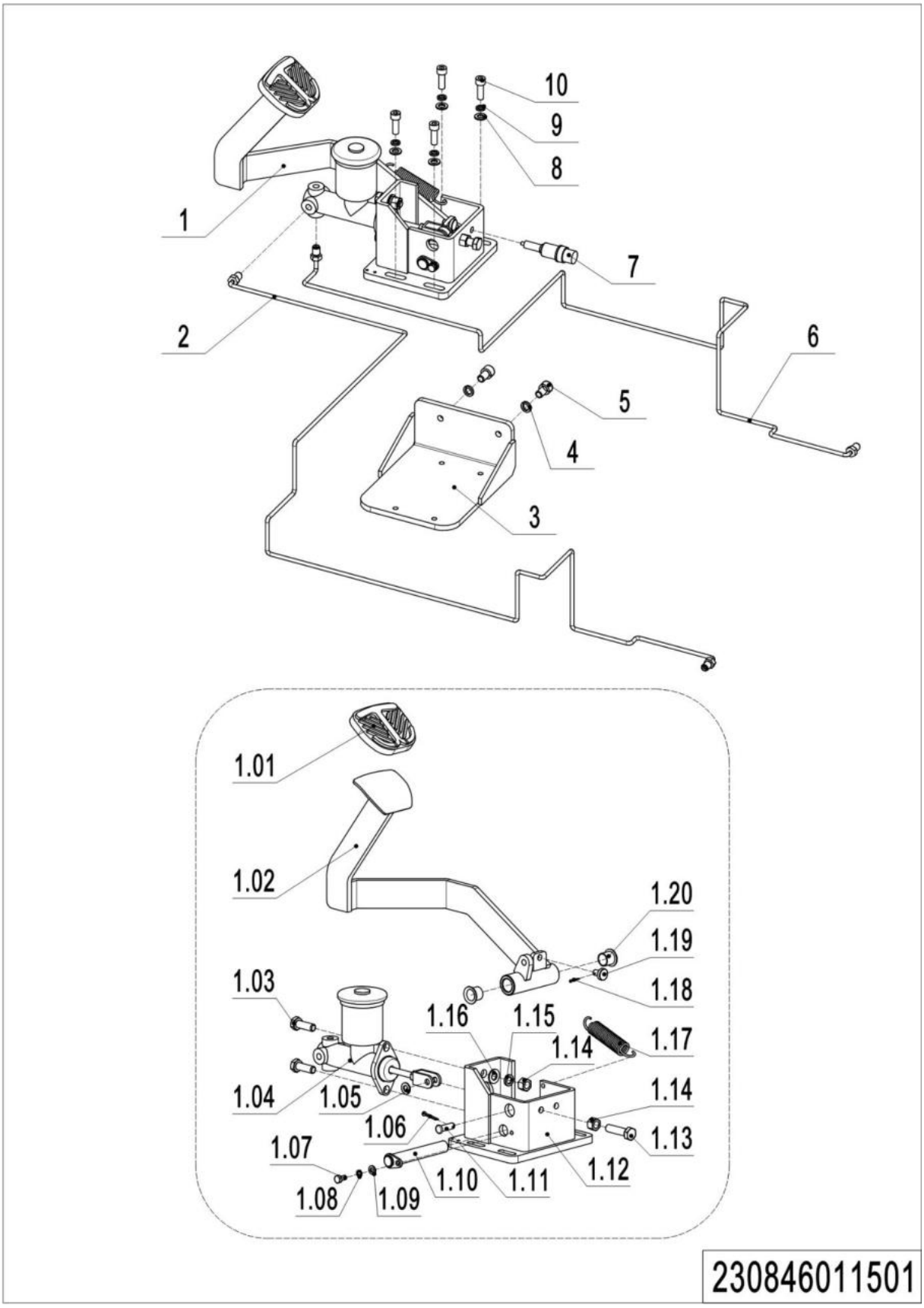

1= Supply as package. 2= Supply with constraints. 3= Phasing-out supply. 4= Supply as assembly. 5= Check other tables.

01 Brake Assembly (230846011501)

No.	Item Code	Mark	Item Description	Qty	Substitute	Note
1	230811510000		Foot Brake Assembly	1		
1.01	253511520010		Rubber Mat	1		
1.02	230811510001		Platform	1		
1.03	910100300037		Bolt	2		
1.04	212111510006		Brake Pump	1		
1.05	910400100006		Flat Washer	1		
1.06	910600600026		Cotter Pin	1		
1.07	910100300009		Bolt	1		
1.08	910400500005		Spring Washer	1		
1.09	910400100005		Flat Washer	1		
1.10	212111510002		Pin	1		
1.11	910600700026		Pin	1		
1.12	212111510001		Bracket	1		
1.13	910100300039		Bolt	1		
1.14	910300100007		Nut	3		
1.15	910400500007		Spring Washer	2		
1.16	910400100007		Flat Washer	2		
1.17	275211521013		Spring	1		
1.18	910600600011		Cotter Pin	1		
1.19	251011520015		Crash Pad	1		
1.20	940500200016		Bushing	2		
2	230811510002		Steel Tube	1		
3	230811510003		Fixing Plate	1		
4	910400500007		Spring Washer	2		
5	910200200074		Screw	2		
6	230811510004		Steel Tube	1		
7	920201000002		Switch	1		
8	910400100006		Flat Washer	4		
9	910400500006		Spring Washer	4		
10	910200200058		Screw	4		

1= Supply as package. 2= Supply with constraints. 3= Phasing-out supply. 4= Supply as assembly. 5= Check other tables.

Chapter 3: Steering System

01 Steering Mechanism (230846015501)

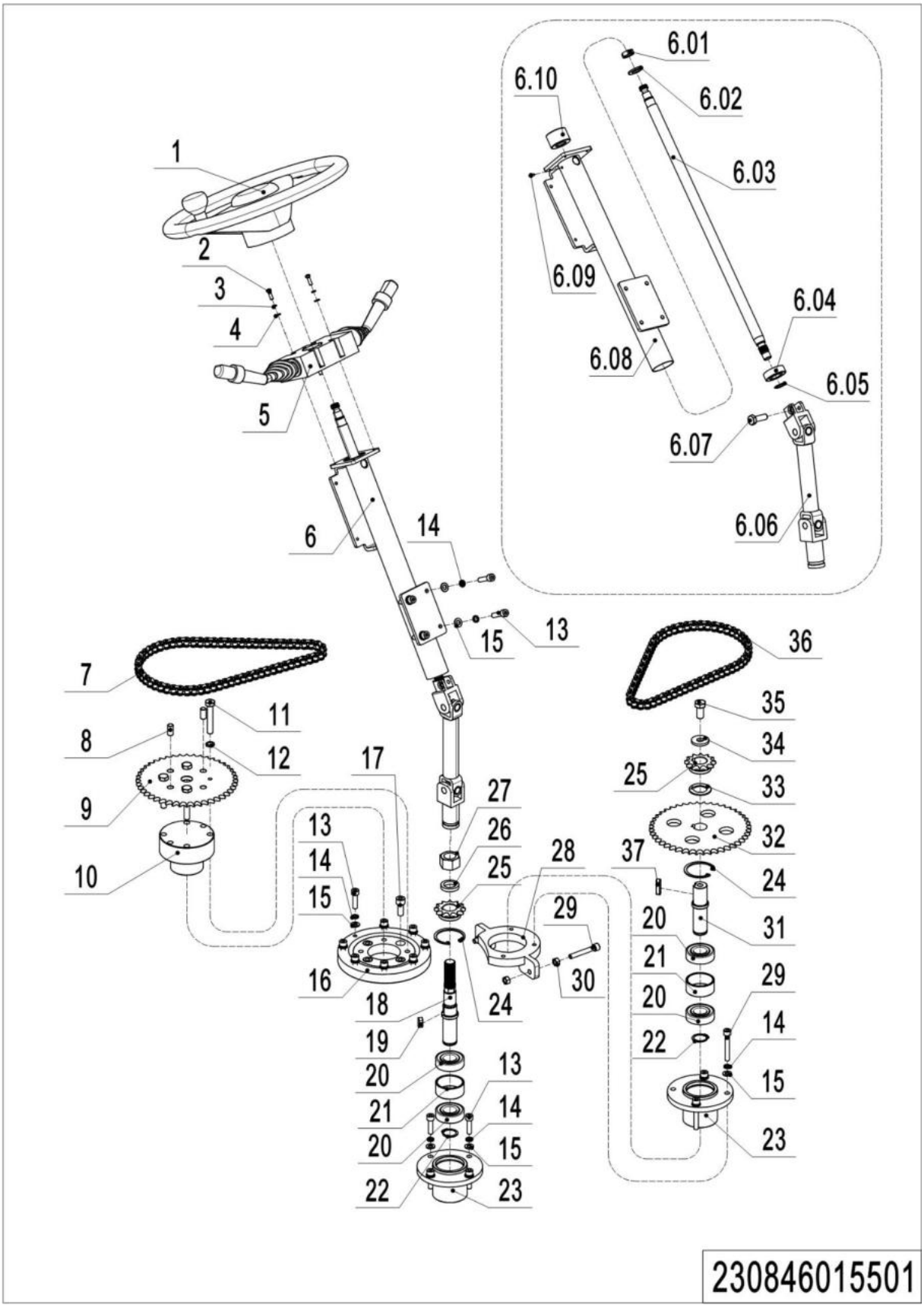

01 Steering Mechanism (230846015501)

No.	Item Code	Mark	Item Description	Qty	Substitute	Note
1	253515010007		Steering Wheel	1		
2	910200500040		Screw	4		
3	910400500004		Spring Washer	4		
4	910400100004		Flat Washer	4		
5	920200800013		Bonded Switch	1		
6	230815510005		Joint Pipe Assembly	1		
6.01	910300400005		Nut	1		
6.02	910400100009		Flat Washer	1		
6.03	230815520024		Spline Shaft	1		
6.04	910700200018		Bearing	1		
6.05	910401300008		Circlip	1		
6.06	230815510003		Cardan Joint	1		
6.07	910100300037		Bolt	1		
6.08	230815510004		Joint Pipe	1		
6.09	910201500003		Screw	1		
6.10	253515020015		Nylon Sleeve	1		
7	230815520032		Chain	1		
8	910600100029		Cylindrical Pin	2		
9	230815520016		Chain Pulley	1		
10	230815520015		Holder	1		
11	910100100035		Bolt	4		
12	910400500007		Spring Washer	4		
13	910200200059		Screw	16		
14	910400500006		Spring Washer	19		
15	910400100006		Flat Washer	19		
16	532213520001		Slewing Bearing	1		
17	910200200076		Screw	4		
18	230815520023		Spline Shaft	1		
19	910600800019		Flat Key	1		
20	910700200020		Bearing	4		

1= Supply as package. 2= Supply with constraints. 3= Phasing-out supply. 4= Supply as assembly. 5= Check other tables.

01 Steering Mechanism (230846015501) Continuation

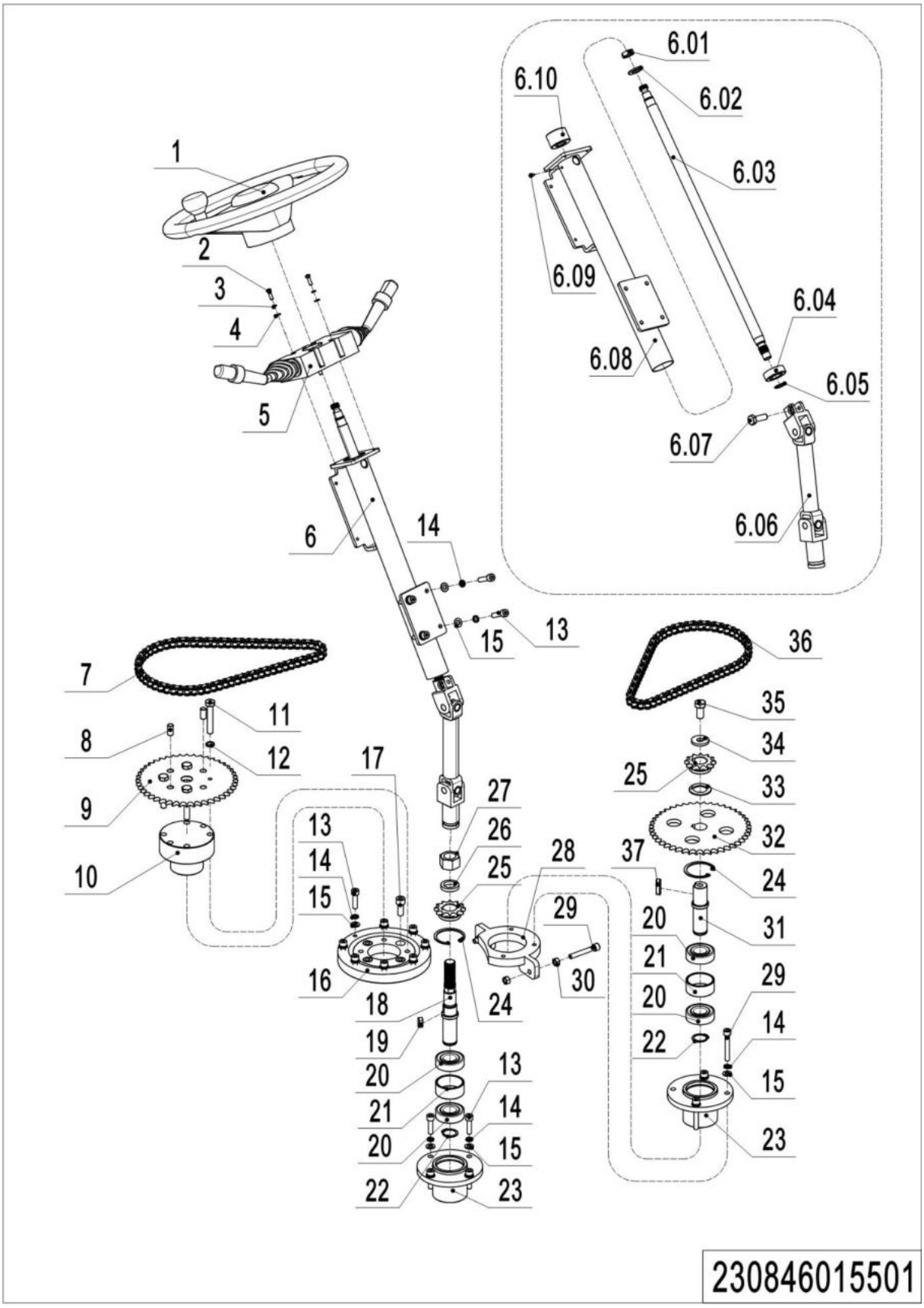

01 Steering Mechanism (230846015501) Continuation

No.	Item Code	Mark	Item Description	Qty.	Substitute	Note
21	230815520021		Spacer Bush	2		
22	910401300014		Circlip	2		
23	230815510002		Bearing Base	2		
24	910401400016		Circlip	2		
25	230815520018		Chain Pulley	2		
26	230815520106		Washer	1		
27	910300200007		Nut	1		
28	230815510006		Adjusting Plate	1		
29	910200200064		Screw	5		
30	910300100006		Nut	4		
31	230815520022		Axle	1		
32	230815520017		Chain Pulley	1		
33	230815520028		Washer	1		
34	230815520035		Washer	1		
35	910100300048		Bolt	1		
36	230815520033		Chain	1		
37	910600800021		Feather Key	1		

02 Steering Wheel Components (230846015502)

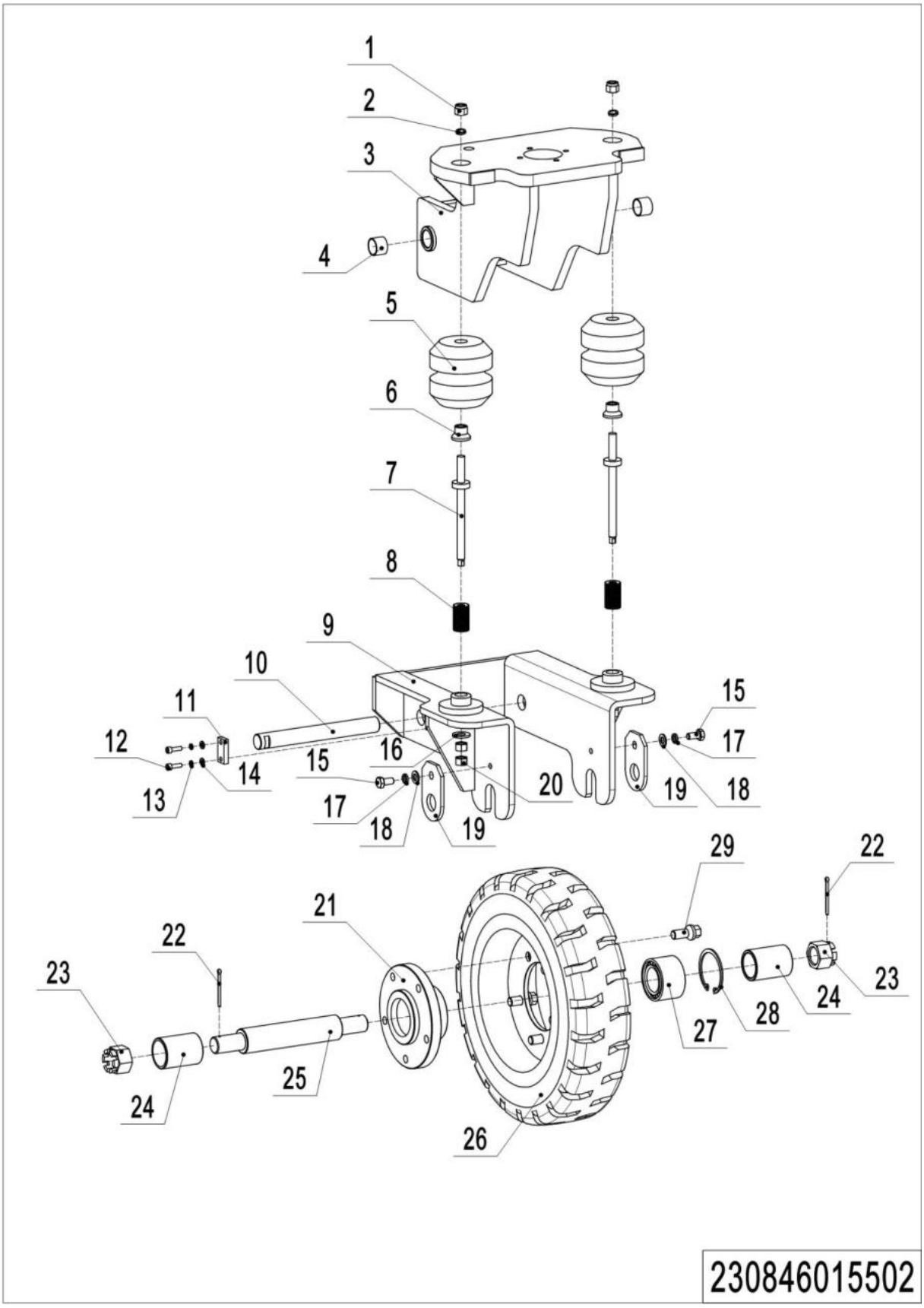

02 Steering Wheel Components (230846015502)

No.	Item Code	Mark	Item Description	Qty.	Substitute	Note
1	910300500006		Nut	2		
2	910400500008		Spring Washer	2		
3	230815510001		Mounting Base	1		
4	940500100027		Bushing	2		
5	230815520034		Rubber spring	2		
6	230815520029		Press Block	2		
7	230815520102		Axle	2		
8	911100100003		Spring	40		
9	230815510000		Wheel Carrier	1		
10	230815520010		Axle	1		
11	230815520009		Plate	1		
12	910200200036		Screw	2		
13	910400500005		Spring Washer	2		
14	910400100005		Flat Washer	2		
15	910200200075		Screw	2		
16	230815520103		Washer	2		
17	910400500007		Spring Washer	2		
18	910400100007		Flat Washer	2		
19	230815520011		Fixing Plate	2		
20	910300100008		Nut	4		
21	230815520013		Bracket	1		
22	910600600045		Cotter Pin	2		
23	910301600003		Nut	2		
24	230815520012		Bushing	2		
25	230815520014		Axle	1		
26	272313012002		Tyre	1		
27	941101000006		Bearing	1		
28	910401400019		Circlip	1		
29	216513020000		Bolt	5		

1= Supply as package. 2= Supply with constraints. 3= Phasing-out supply. 4= Supply as assembly. 5= Check other tables.

Chapter 4: Chassis System

01 Chassis Assembly (230846021501)

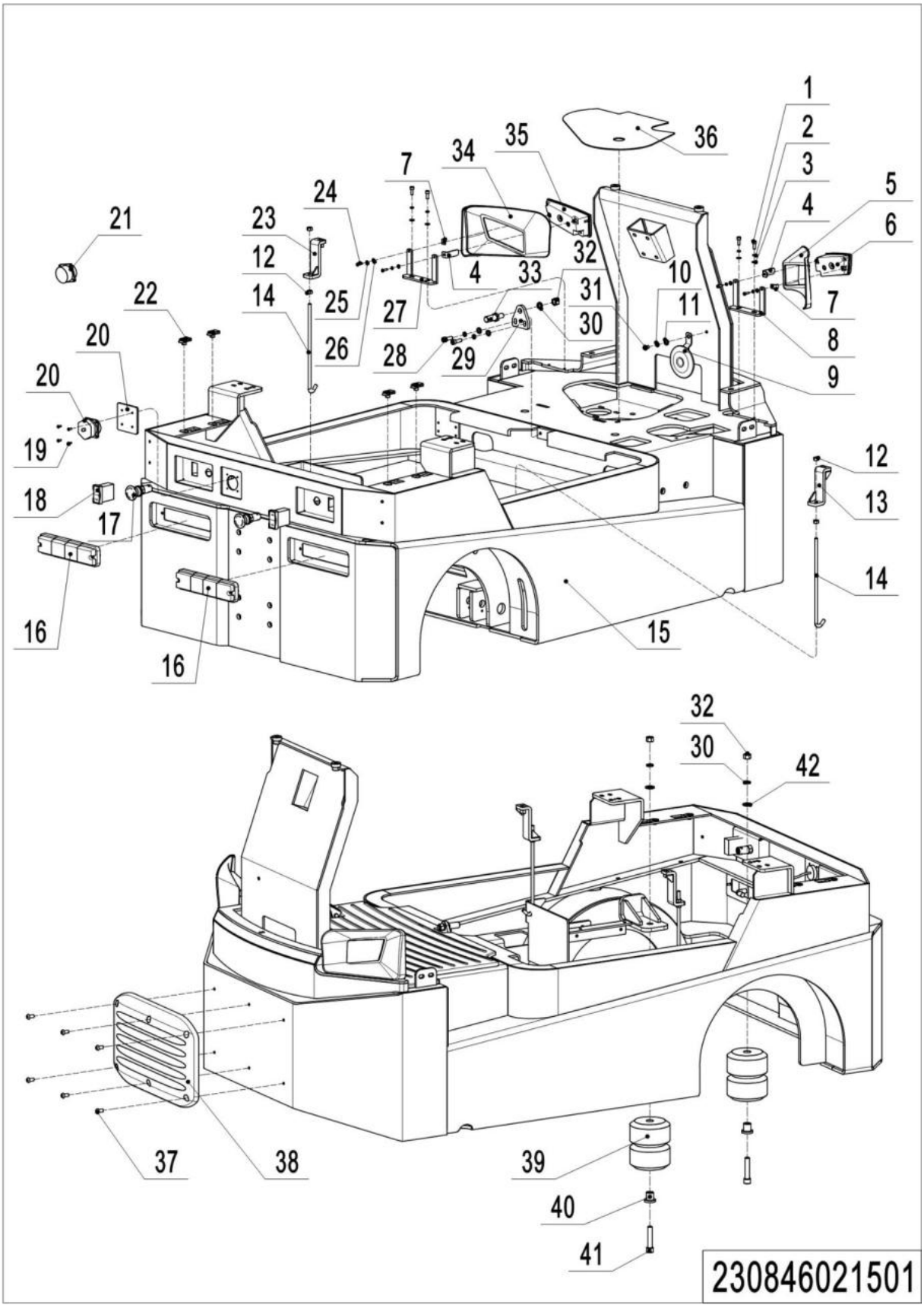

1= Supply as package. 2= Supply with constraints. 3= Phasing-out supply. 4= Supply as assembly. 5= Check other tables.

01 Chassis Assembly (230846021501)

No.	Item Code	Mark	Item Description	Qty.	Substitute	Note
1	910200200035		Screw	4		
2	910400500005		Spring Washer	4		
3	910400100005		Flat Washer	4		
4	230821520075		Plate	2		
5	230821520074		Cover	1		
6	922000100037		Lamp	1		
7	230821520076		Plate	2		
8	230821510005		Bracket	1		
9	920500100001		Horn	1		
10	910400500006		Spring Washer	3		
11	910400100006		Flat Washer	3		
12	910300100006		Nut	4		
13	230821510007		Press Plate	1		
14	230821520078		Fixing Bar	2		
15	230821510000		Chassis	1		
16	922000100003		Lamp	2		
17	920200100021		Emergency Button	2		
18	920200800042		Switch	2		
19	910200300006		Screw	4		
20	231033010019		Wire Harness	1		Matching
20	230821520098		Close Plate	1		
21	920400300009		Connector	1		Matching
22	940400400003		Cage Nut	4		
23	230821510006		Press Plate	1		
24	910201400013		Screw	4		
25	910400500003		Spring Washer	4		
26	910400100003		Flat Washer	4		
27	230821510004		Bracket	1		
28	910200200058		Screw	2		
29	230821520061		Fixing Plate	1		

1= Supply as package. 2= Supply with constraints. 3= Phasing-out supply. 4= Supply as assembly. 5= Check other tables.

01 Chassis Assembly (230846021501) Continuation

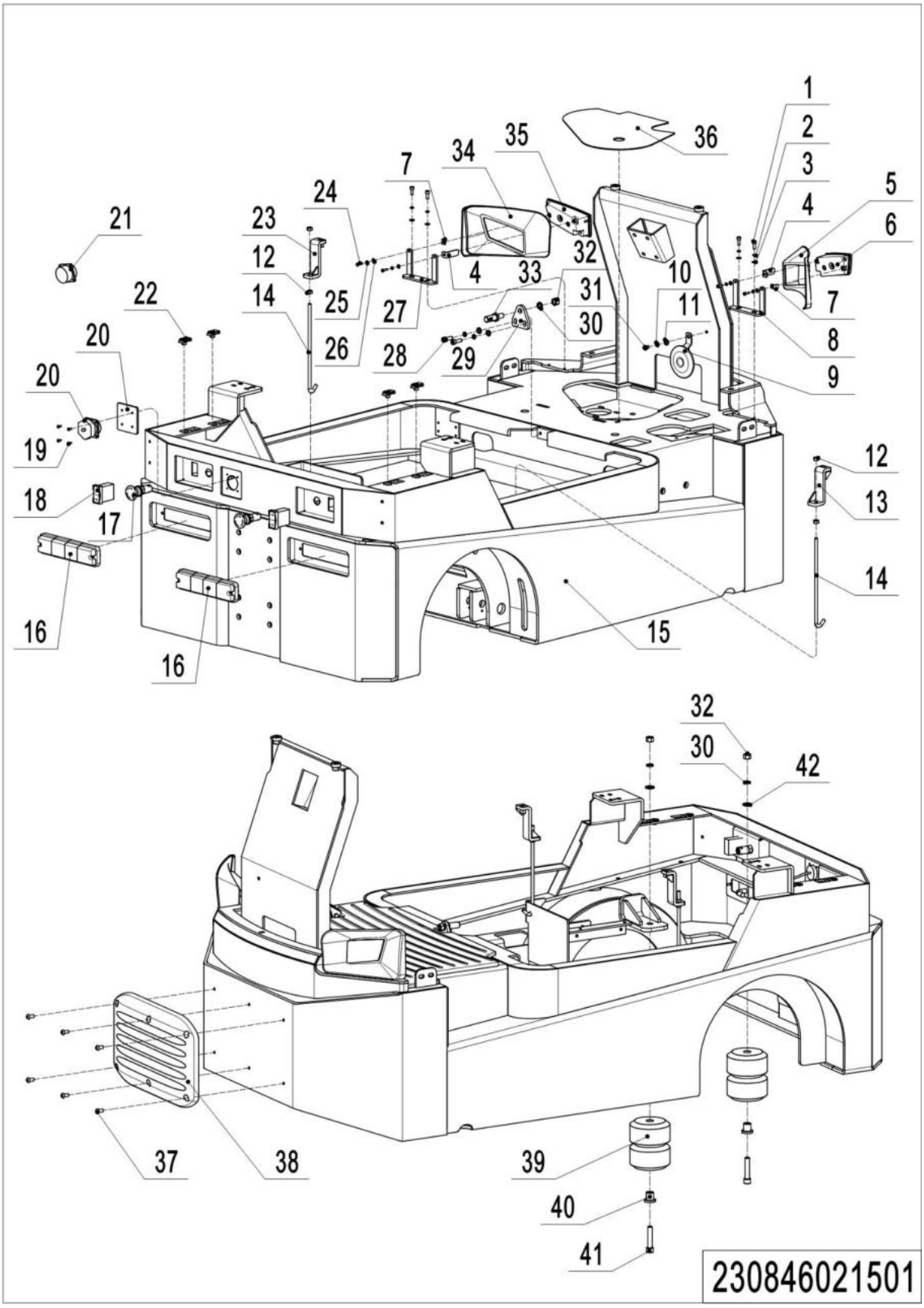

01 Chassis Assembly (230846021501) Continuation

No.	Item Code	Mar	Item Description	Q	Substitute	Note
30	910400500008		Spring Washer	3		
31	910200300023		Screw	1		
32	910300100008		Nut	3		
33	255021020052		Spring Bolt	1		
34	230821520073		Cover	1		
35	922000100038		Lamp	1		
36	230821520060		Platform	1		
37	910200300031		Screw	6		
38	230821520059		Subplate	1		
39	230821520058		Rubber spring	2		
40	230821520097		Press Block	2		
41	910200200104		Screw	2		
42	910400100008		Flat Washer	2		

1= Supply as package. 2= Supply with constraints. 3= Phasing-out supply. 4= Supply as assembly. 5= Check other tables.

02 Battery Cover Assembly (230846021001)

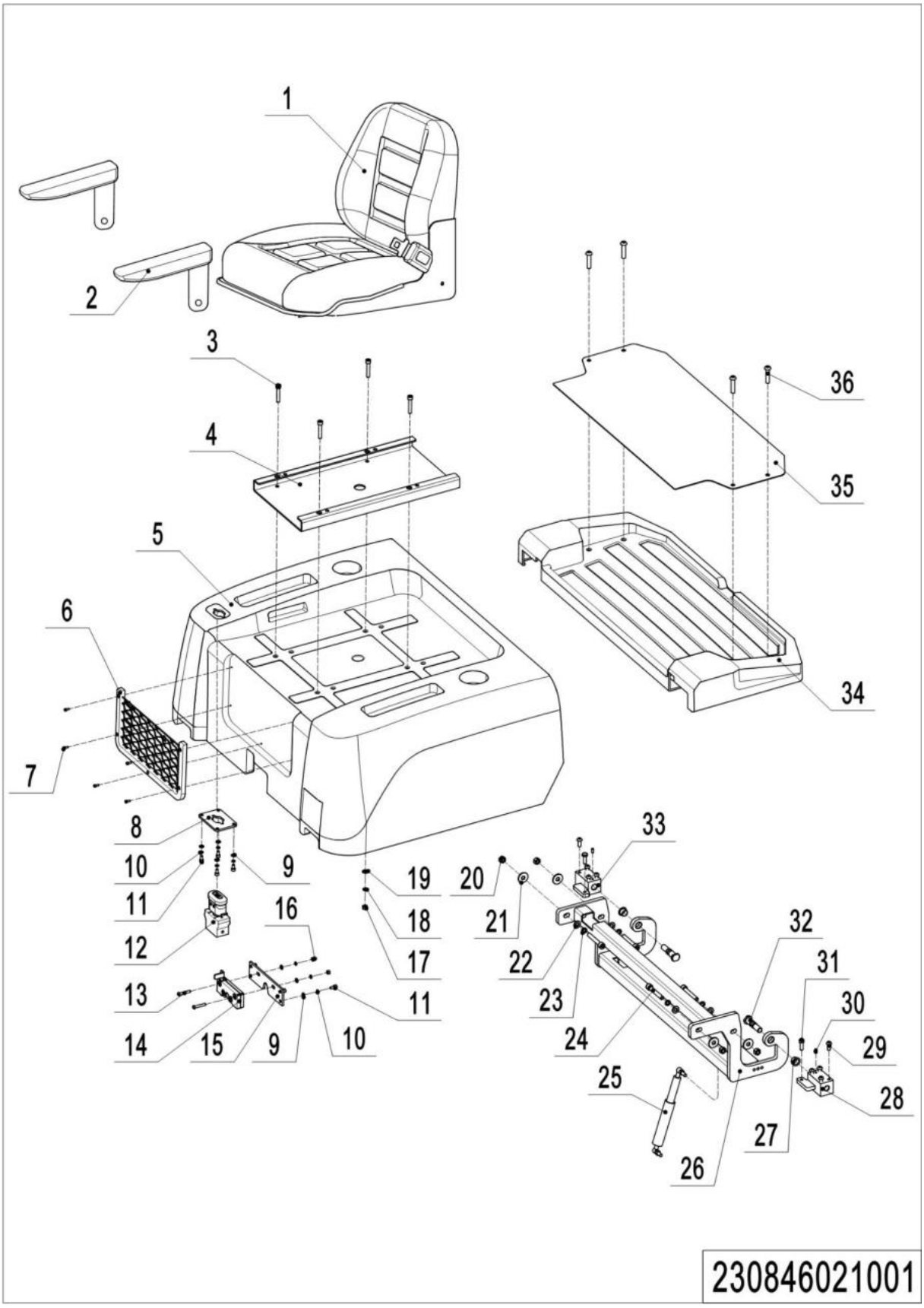

1= Supply as package. 2= Supply with constraints. 3= Phasing-out supply. 4= Supply as assembly. 5= Check other tables.

02 Battery Cover Assembly (230846021001)

No.	Item Code	Mark	Item Description	Qty.	Substitute	Note
1	252137510001		Seat	1		
2	253522020025		Handrail	1		
3	910200200062		Screw	4		
4	230821020009		Mounting Plate	1		
5	230821020100		Protective Cover	1		
6	230821010003		String Bag	1		
7	910200200013		Screw	5		
8	230821020008		Fixing Plate	1		
9	910400100005		Flat Washer	10		
10	910400500005		Spring Washer	10		
11	910200200033		Screw	8		
12	920200100009		Emergency Button	1		
13	910200300021		Screw	2		
14	255021010010		Lock	1		
15	230821020007		Fixing Plate	1		
16	910300100005		Nut	2		
17	910300100006		Nut	4		
18	910400500006		Spring Washer	4		
19	910400100006		Flat Washer	4		
20	910300100007		Nut	4		
21	910400200004		Flat Washer	4		
22	910400100007		Flat Washer	4		
23	910400500007		Spring Washer	4		
24	910200200084		Screw	4		
25	940400100056		Air Spring	1		
26	230821010000		Bracket	1		
27	940500200018		Bushing	2		
28	230821010001		Mounting Base	1		
29	941100100012		Screw,M8x20	8		
30	910200800011		Screw	2		

1= Supply as package. 2= Supply with constraints. 3= Phasing-out supply. 4= Supply as assembly. 5= Check other tables.

02 Battery Cover Assembly (230846021001) Continuation

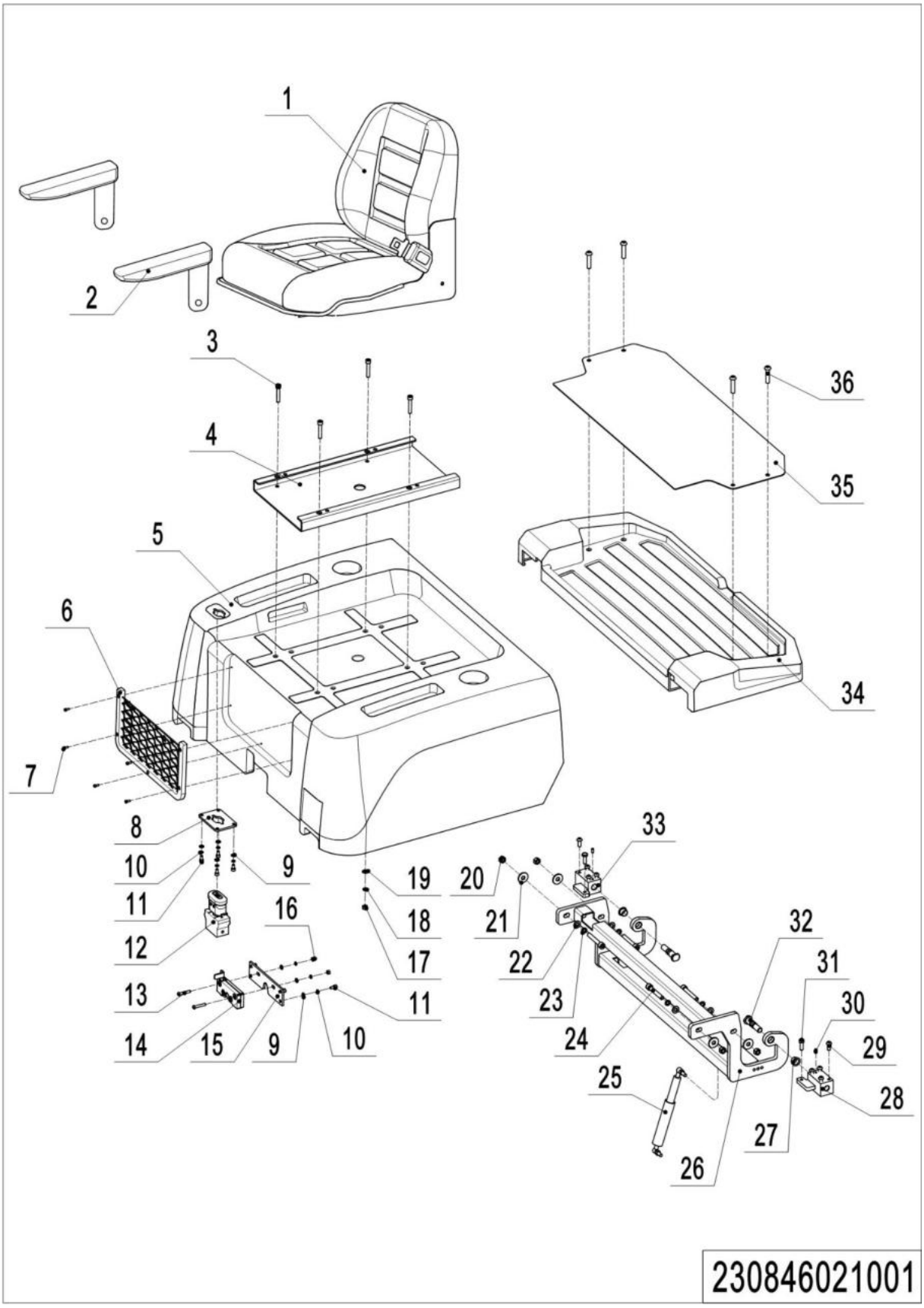

1= Supply as package. 2= Supply with constraints. 3= Phasing-out supply. 4= Supply as assembly. 5= Check other tables.

02 Battery Cover Assembly (230846021001) Continuation

No.	Item Code	Mark	Item Description	Qty.	Substitute	Note
31	910100300023		Bolt	2		
32	230821020006		Axle	2		
33	230821010002		Mounting Base	1		
34	230821020101		Protective Cover	1		
35	230821020010		Close Plate	1		
36	941100100006		Screw	4		

03 Warning Light Assembly (230846035501)

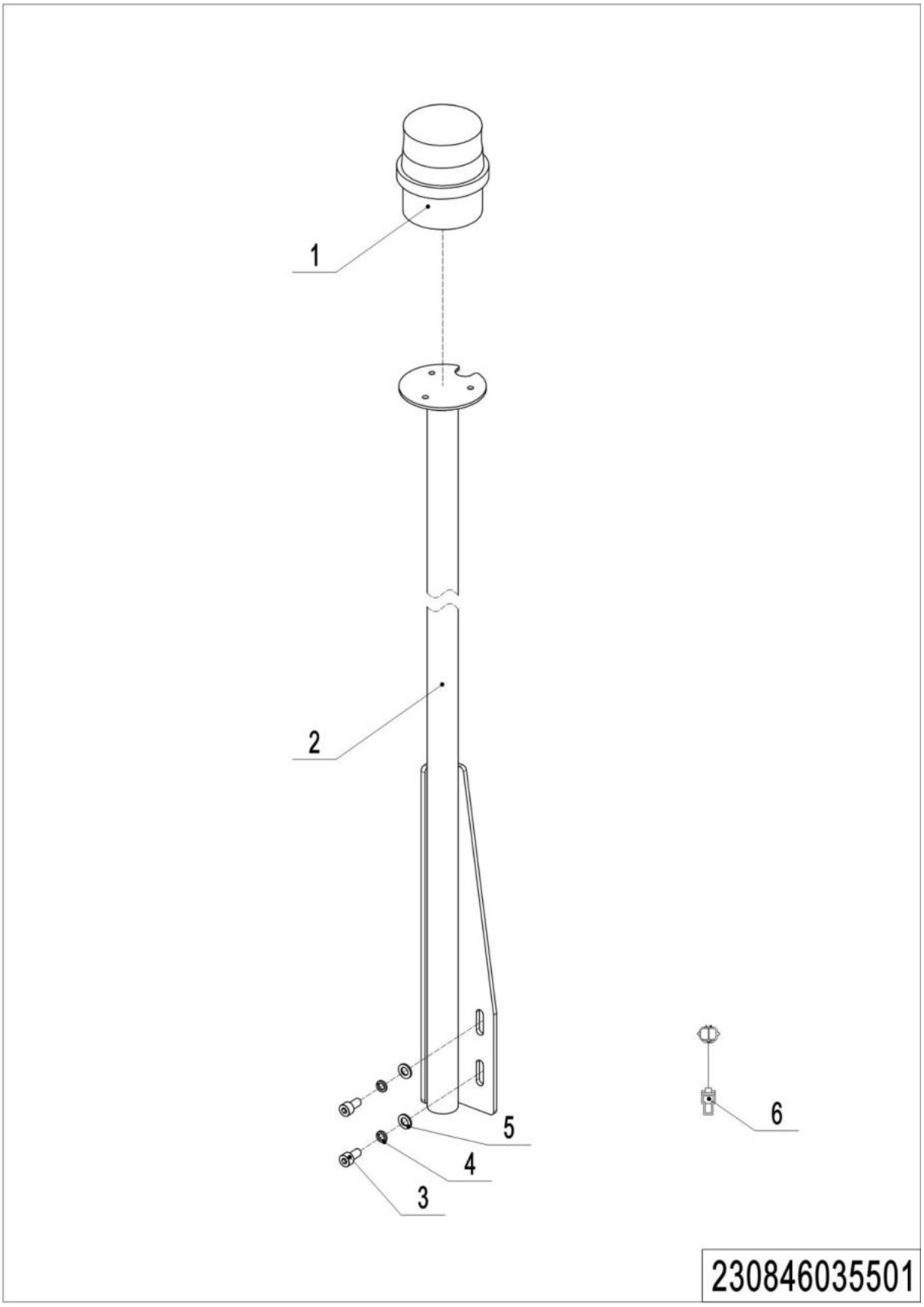

1= Supply as package. 2= Supply with constraints. 3= Phasing-out supply. 4= Supply as assembly. 5= Check other tables.

03 Warning Light Assembly (230846035501)

No.	Item Code	Mark	Item Description	Qty.	Substitute	Note
1	922000100039		Lamp	1		
2	230835510000		Bracket	1		
3	910200200055		Screw	2		
4	910400500006		Spring Washer	2		
5	910400100006		Flat Washer	2		
6	230833010007		Cables	1		

04 Coupling (230846039501)

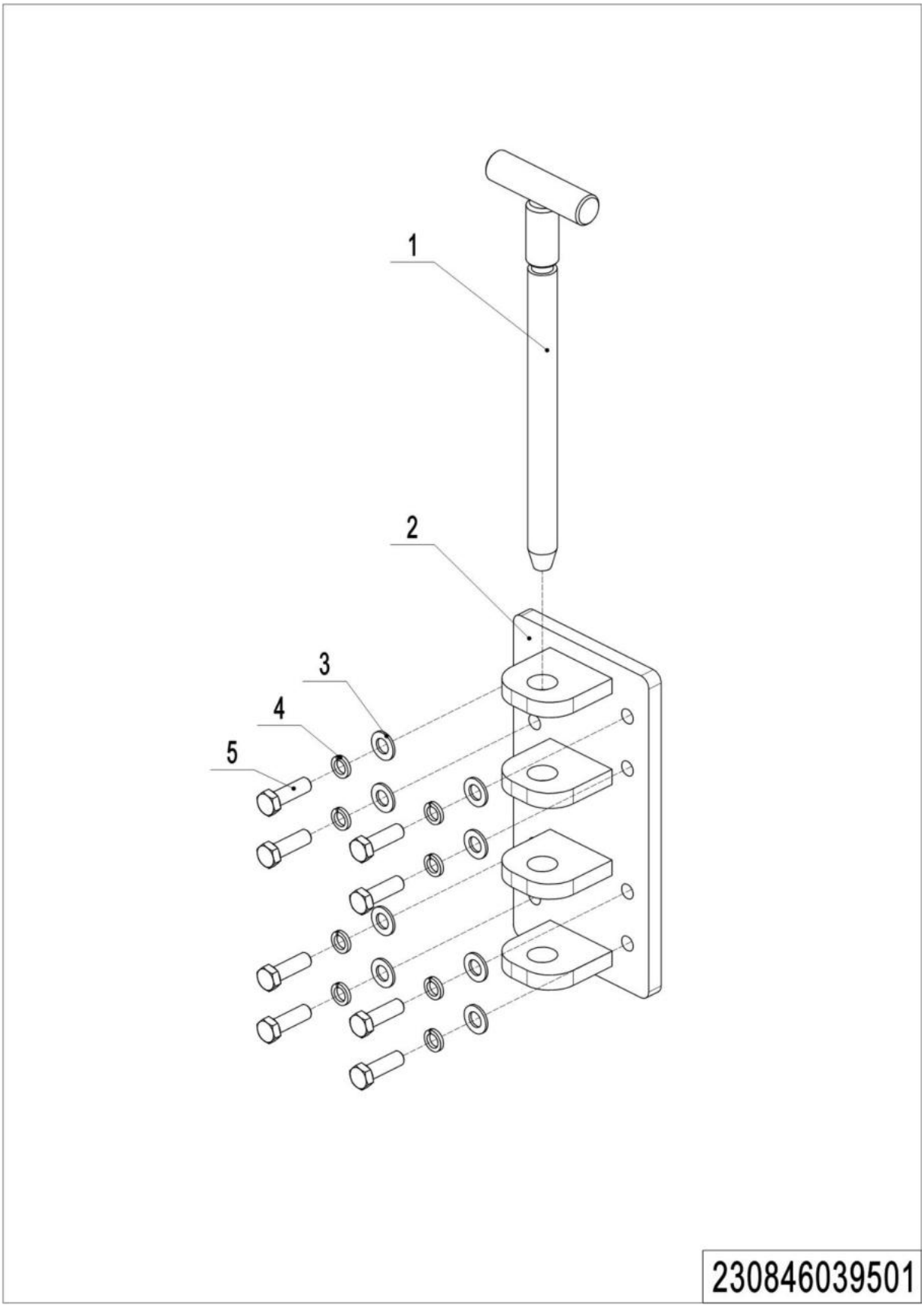

1= Supply as package. 2= Supply with constraints. 3= Phasing-out supply. 4= Supply as assembly. 5= Check other tables.

04 Coupling (230846039501)

No.	Item Code	Mark	Item Description	Qty.	Substitute	Note
1	230839510001		Traction Device	1		
2	230839510000		Fixing Base	1		
3	910400100009		Flat Washer	8		
4	910400500009		Spring Washer	8		
5	910100400023		Bolt	8		

05 Rearview Mirror Assembly (230846049501)

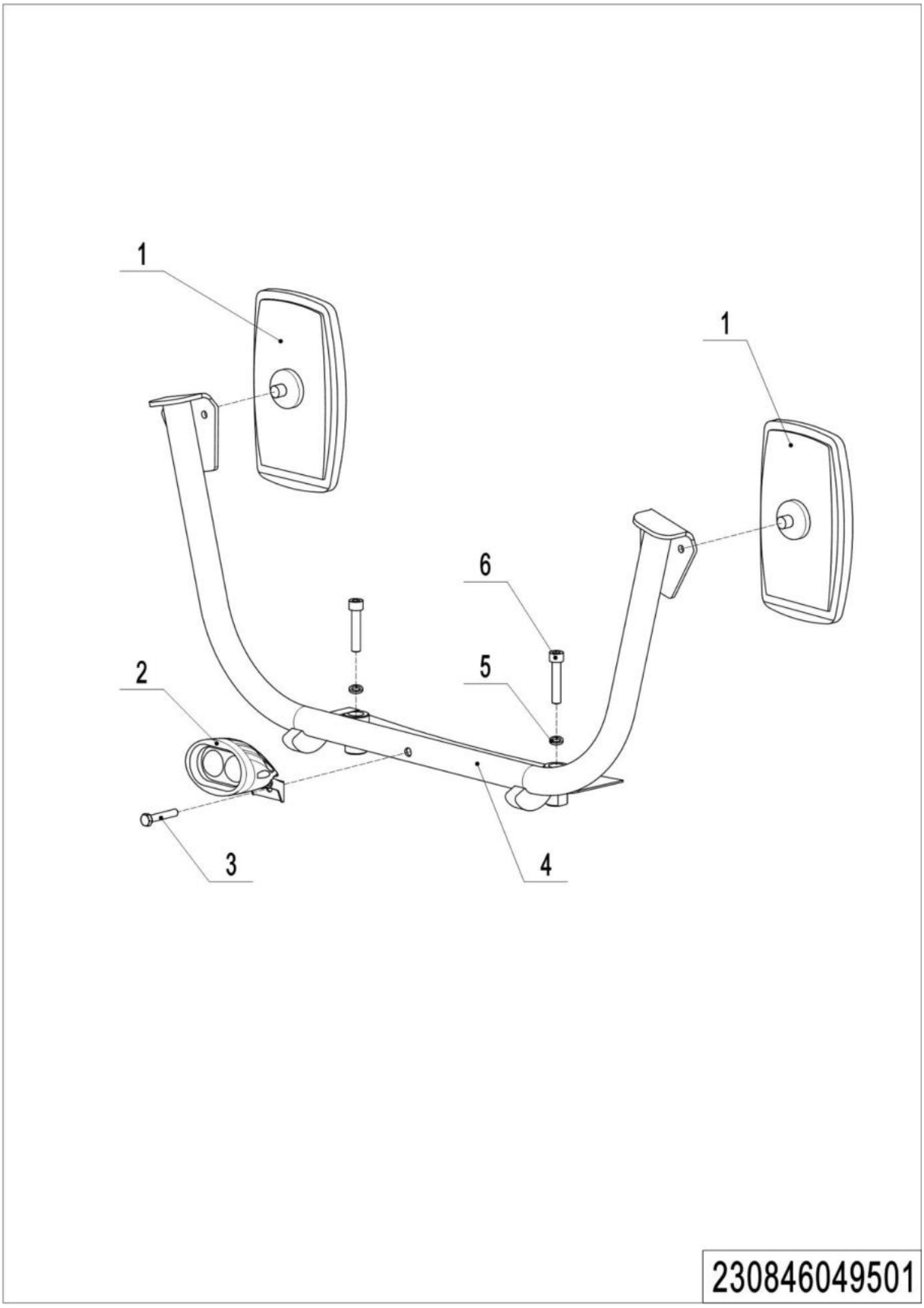

1= Supply as package. 2= Supply with constraints. 3= Phasing-out supply. 4= Supply as assembly. 5= Check other tables.

05 Rearview Mirror Assembly (230846049501)

No.	Item Code	Mark	Item Description	Qty.	Substitute	Note
1	940800100001		Rearview Mirror	2		
2	922000100014		Lamp	1		
3	910100300027		Bolt	1		
4	230849510000		Bracket	1		
5	910400500007		Spring Washer	2		
6	910200200081		Screw	2		

1= Supply as package. 2= Supply with constraints. 3= Phasing-out supply. 4= Supply as assembly. 5= Check other tables.

06 Pedal Assembly (230846018001)

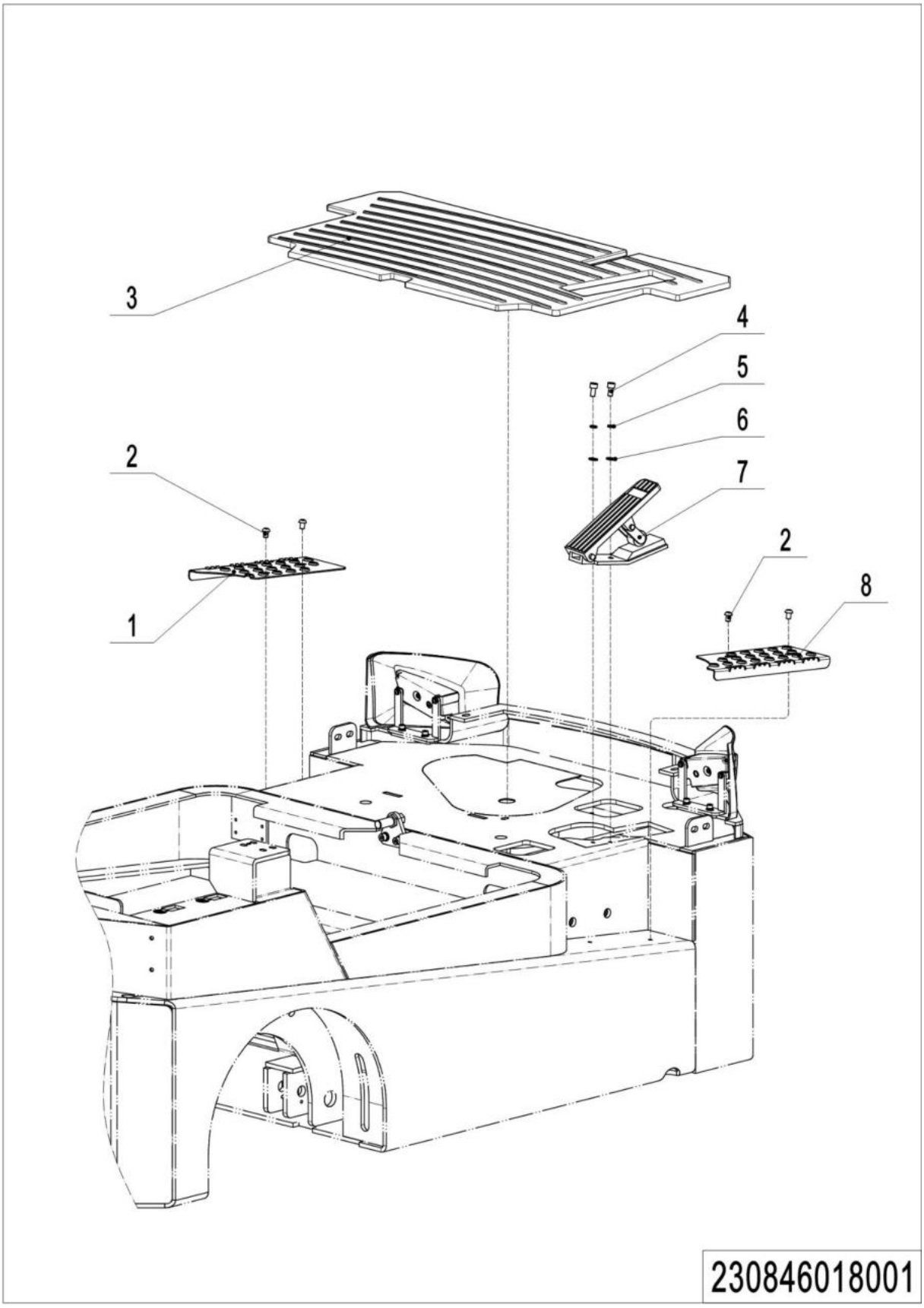

1= Supply as package. 2= Supply with constraints. 3= Phasing-out supply. 4= Supply as assembly. 5= Check other tables.

06 Pedal Assembly (230846018001)

No.	Item Code	Mark	Item Description	Qty.	Substitute	Note
1	230818020002		Platform	1		
2	941100100001		Screw	4		
3	230818020001		Rubber Mat	1		
4	910200200055		Screw	2		
5	910400500006		Spring Washer	2		
6	910400100006		Flat Washer	2		
7	921700100005		Accelerator	1		
7	921700100028		Accelerator	1		20CE
8	230818020003		Platform	1		

Chapter 5: Drive System

01 Drive Motor System (230846013501)

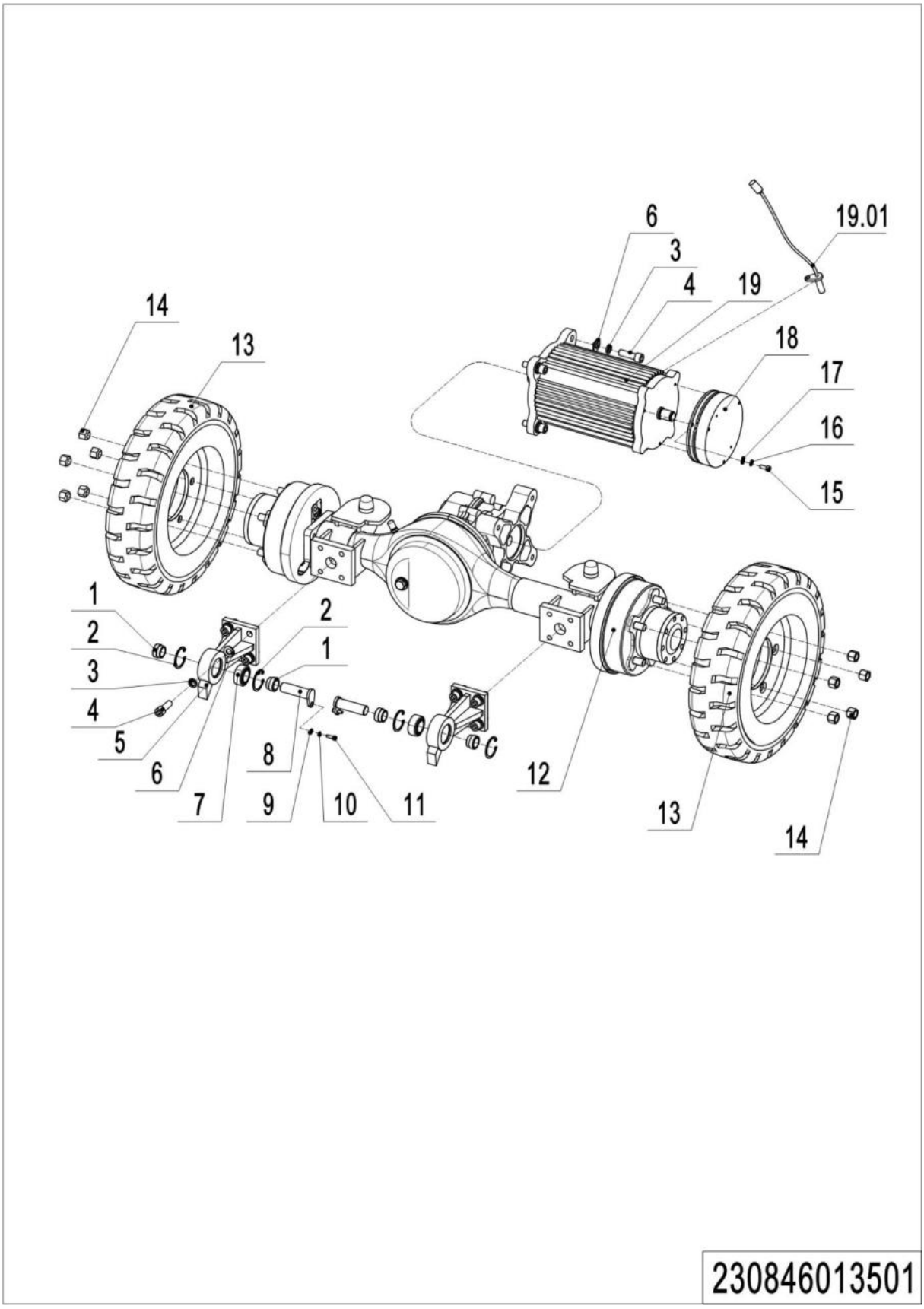

1= Supply as package. 2= Supply with constraints. 3= Phasing-out supply. 4= Supply as assembly. 5= Check other tables.

01 Drive Motor Assembly (230846013501)

No.	Item Code	Mark	Item Description	Qty.	Substitute	Note
1	230813520001		Spacer Bush	4		
2	910401400012		Circlip	4		
3	910400500008		Spring Washer	12		
4	910200200100		Screw	12		
5	230813520008		Bracket	2		
6	910400100008		Flat Washer	12		
7	910700900004		Bearing	2		
8	212120010001		Pin	2		
9	910400100004		Flat Washer	2		
10	910400500004		Spring Washer	2		
11	910200200023		Screw	2		
12	230813510000		Drive Axle	1		
13	272313012002		Tyre	2		
14	253098526041		Nut	10		
15	910200200035		Screw	3		
16	910400500005		Spring Washer	3		
17	910400100005		Flat Washer	3		
18	282332010001		Brake	1		
19	920900100140		Motor	1		
19. 01	921800200037		Encoder	1		

02 Gearbox Assembly (230846013502)

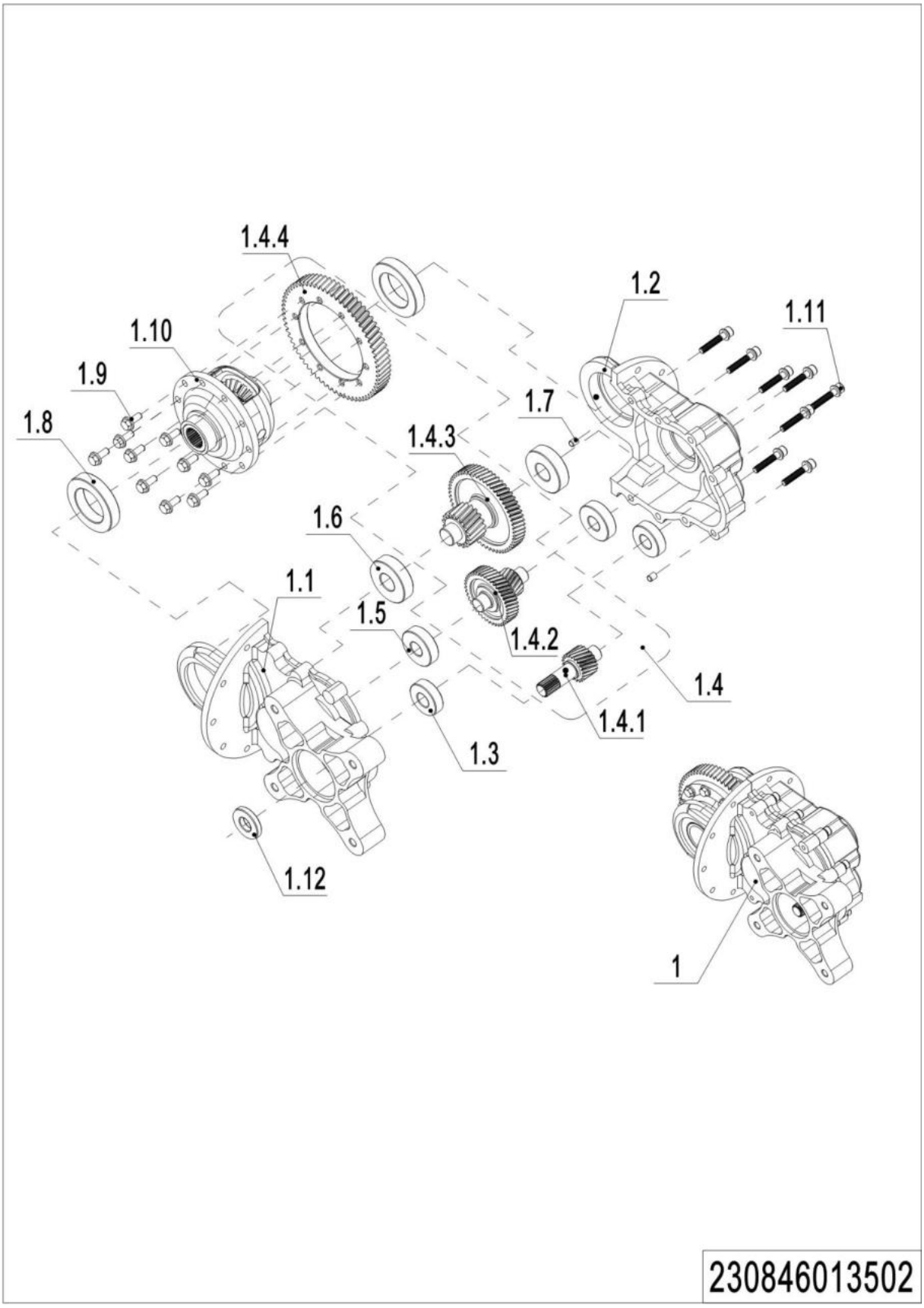

1= Supply as package. 2= Supply with constraints. 3= Phasing-out supply. 4= Supply as assembly. 5= Check other tables.

02 Gearbox assembly (230846013502)

No.	Item Code	Mark	Item Description	Qty.	Manufacturer Part No.	Note
1	230813510011		Gearbox Casing	1	JH2142402010	
1.1	230813520101		214 Gearbox L	1	JH2142402011	
1.2	230813520102		214 Gearbox R	1	JH2142402012	
1.3	230813520103		Bearing	2	6204-2RZ	
1.4	230813510012		214 Gear	1	JH2142402020	
1.4.1	230813520104		Primary Input Axle	1	JH2142402021	
1.4.2	230813520105		Secondary Gear Set	1	JH2142402022	
1.4.3	230813520106		Tertiary Gear Set	1	JH2142402023	
1.4.4	230813520107		Quaternary Gear Set	1	JH2142402024	
1.5	230813520108		Bearing	2	6304-2RZ	
1.6	230813520109		Bearing	2	6305-2RZ	
1.7	230813520110		Pin	2	JH2142402013	
1.8	230813520111		Bearing	2	6010-2RZ	
1.9	230813520112		Set Screw	10	JH2142402014	
1.10	230813520113		214 Differential with Gears	1	JH2142402040	
1.11	230813520114		Set Screw	8	JH2142402016	
1.12	230813520115		Oil Seal	1	JH2142402015	

03 Drum Brake Assembly (230846013503)

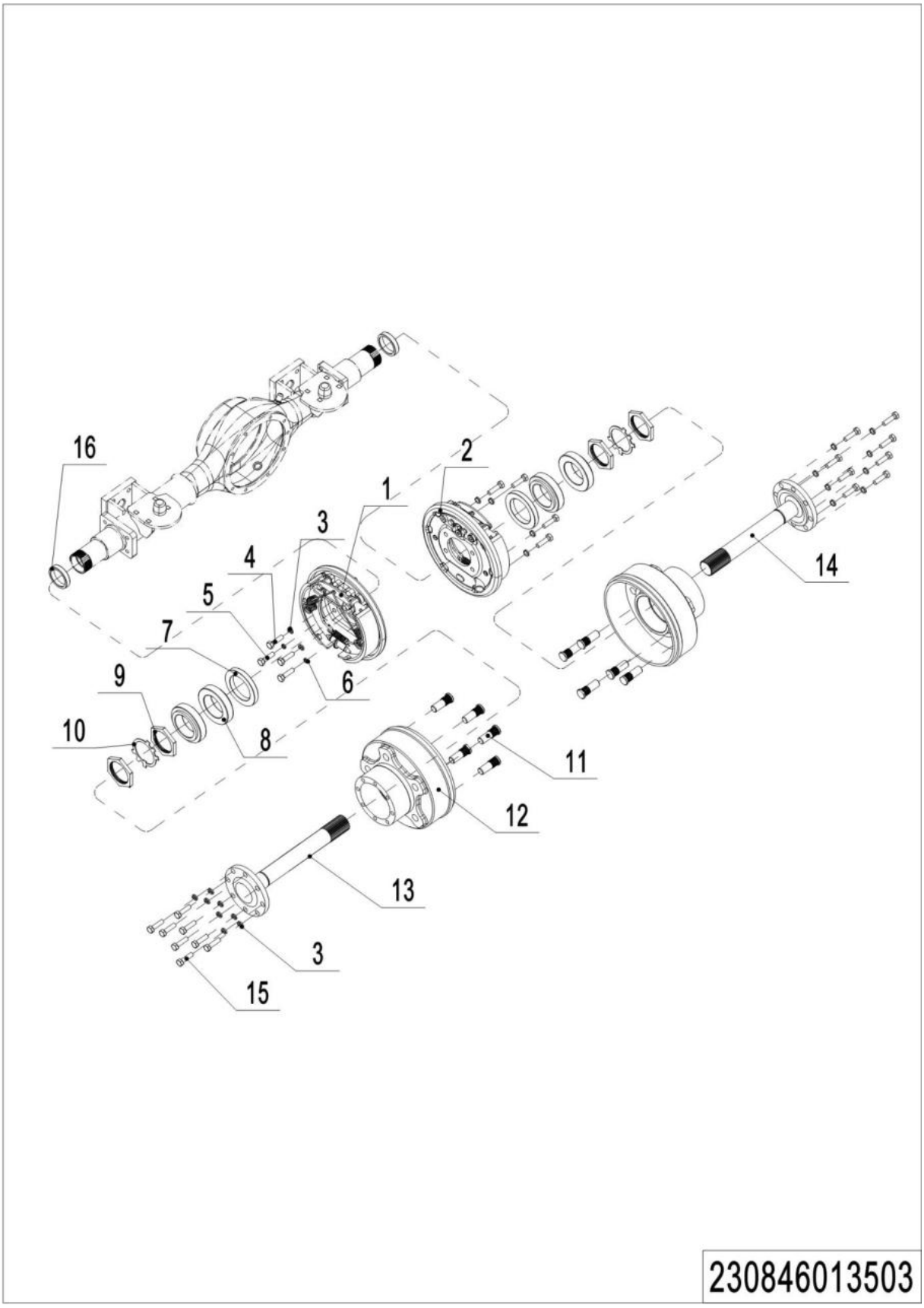

1= Supply as package. 2= Supply with constraints. 3= Phasing-out supply. 4= Supply as assembly. 5= Check other tables.

03 Drum Brake Assembly (230846013503)

No.	Item Code	Mark	Item Description	Qty.	Manufacturer Part No.	Note
1	230813520116		180 Brake L	1	JH2143502010-1	
2	230813520117		180 Brake R	1	JH2143502020-2	
3	910400500006		Spring Washer	20		
4	230813520118		Fixing Screw	4	JH2142401016	
5	230813520119		Set Screw	4	JH2142401017	
6	230813520120		Washer	4	JH2142401018	
7	230813520121		Dust-proof Oil Seal	2	JH2142401019	
8	230813520122		Half-axle Bearing	4	32010	
9	230813520123		Bearing Lock Nut	4	JH2142401021	
10	230813520124		Lock Nut Stopper	2	JH2142401022	
11	230813520125		Screw	10	JH2142401023	
12	230813520126		180 Brake Drum	2	JH2142401024	
13	230813520127		Half-axle L	1	JH2142401025	
14	230813520128		Half-axle R	1	JH2142401026	
15	910100300023		Bolt	16		
16	230813520129		Oil Seal	2	JH2142401027	

1= Supply as package. 2= Supply with constraints. 3= Phasing-out supply. 4= Supply as assembly. 5= Check other tables.

Chapter 6: Electrical Parts

01 Electronic Control Components (230846033001)

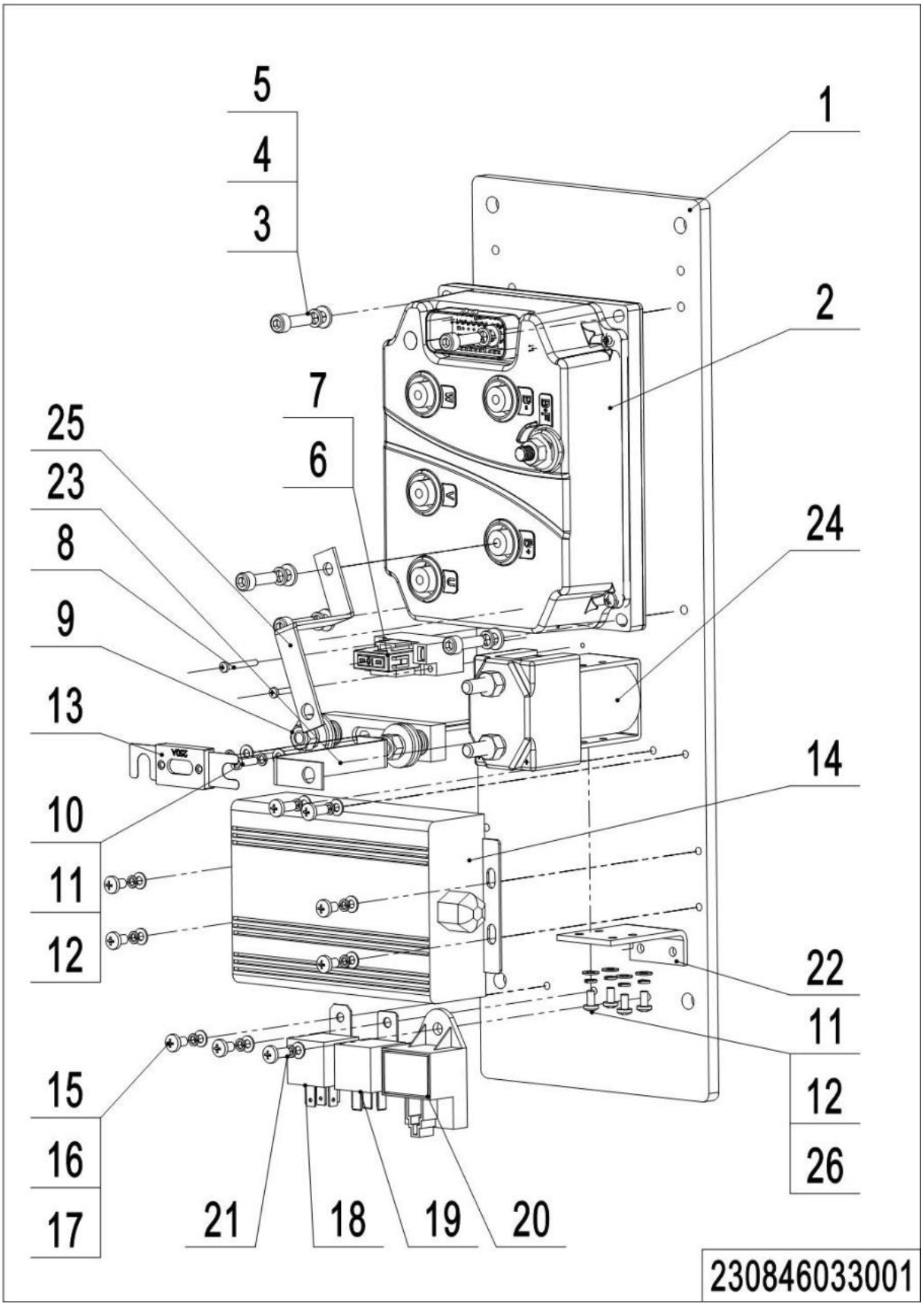

1= Supply as package. 2= Supply with constraints. 3= Phasing-out supply. 4= Supply as assembly. 5= Check other tables.

01 Electronic Control Components (230846033001)

No.	Item Code	Mark	Item Description	Qty.	Substitute	Note
1	230833020000		Plate	1		
2	921400100161		Controller	1		
3	910200200036		Screw	5		
4	910400500018		Spring Washer	5		
5	910400100005		Flat Washer	5		
6	920100400006		Fuse Holder	1		
7	920100200002		Fuse	1		
8	910200500016		Screw	2		
9	920100400002		Fuse Holder	1		
10	910200500024		Screw	2		
11	910400100003		Flat Washer	6		
12	910400500003		Spring Washer	6		
13	920100100024		Fuse	1		
14	921900100014		Converter	1		
15	910200500039		Screw	6		
16	910400100004		Flat Washer	9		
17	910400500004		Spring Washer	9		
18	920800100011		Relay	1		
19	920800100010		Relay	1		
20	922000100005		Lamp	1		
21	910200500038		Screw	3		
22	921300400004		Holder	1		
23	535933020004		Copper Busbar	1		
24	920700100008		Contactor	1		
25	230833020001		Copper Busbar	1		
26	910200500034		Screw	4		

1= Supply as package. 2= Supply with constraints. 3= Phasing-out supply. 4= Supply as assembly. 5= Check other tables.

02 Wire Harness (230846033002)

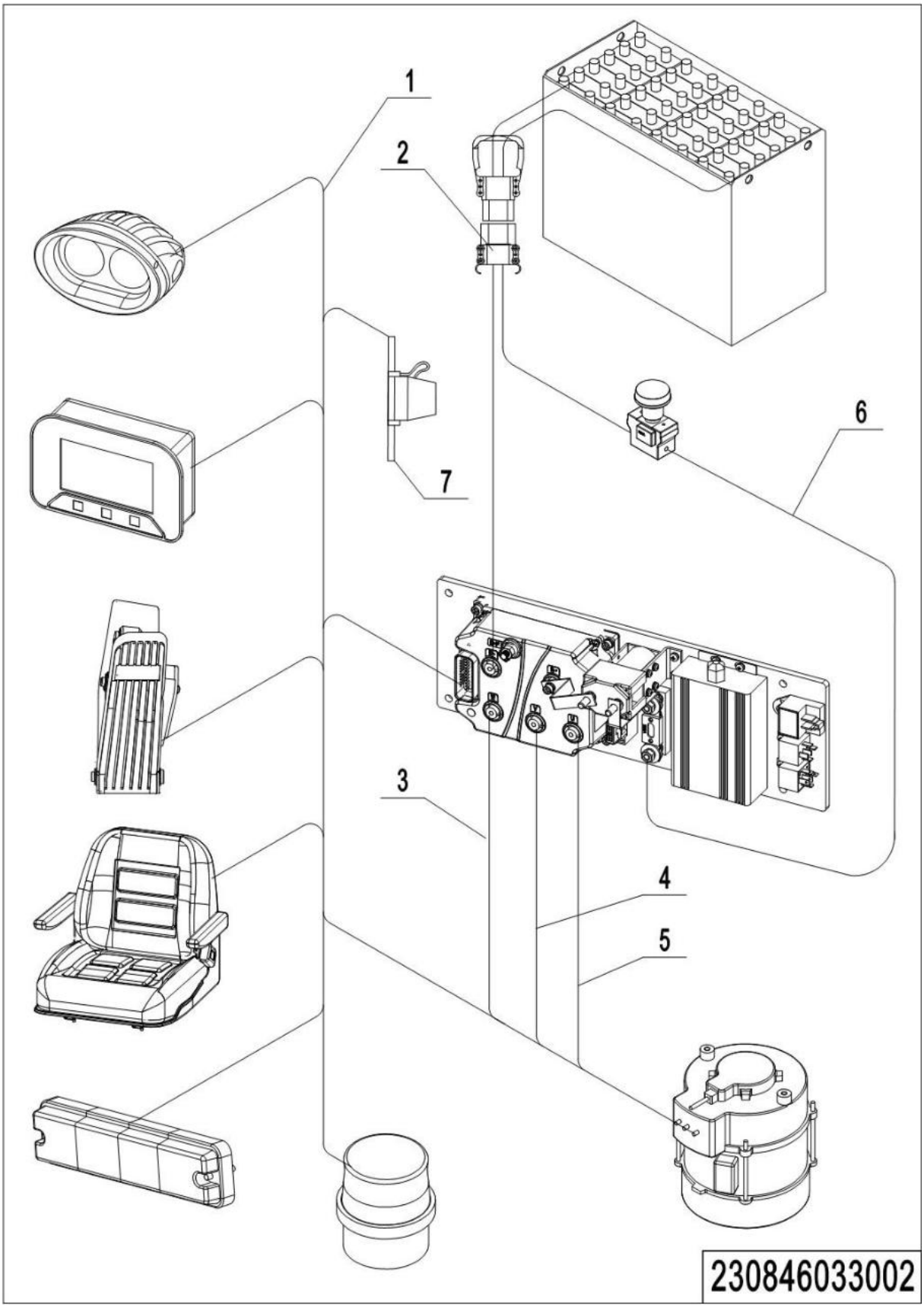

1= Supply as package. 2= Supply with constraints. 3= Phasing-out supply. 4= Supply as assembly. 5= Check other tables.

02 Wire Harness (230846033002)

No.	Item Code	Mark	Item Description	Qty.	Substitute	Note
1	230833010000		Wire Harness	1		
1	230833010007		Cables	1		
2	230833010005		Wire Harness	1		
3	230833010001		Cable	1		
4	230833010002		Cable	1		
5	230833010003		Cable	1		
6	230833010004		Cable	1		
7	920100200010		Fuse	1		

03 Electronic Control Components (Curtis) (230846033003)

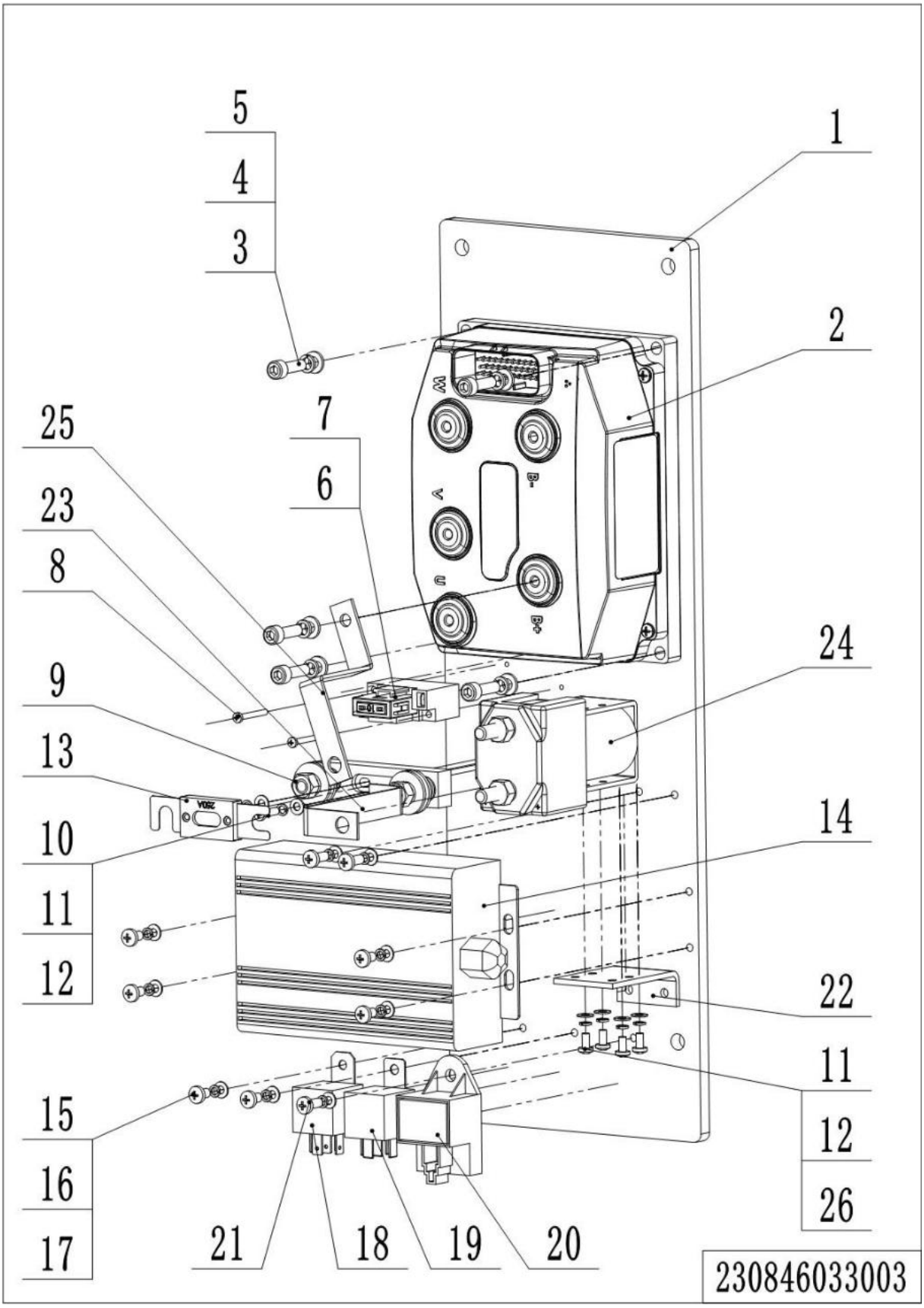

1= Supply as package. 2= Supply with constraints. 3= Phasing-out supply. 4= Supply as assembly. 5= Check other tables.

03 Electronic Control Components (Curtis) (230846033003)

No.	Item Code	Mark	Item Description	Qty.	Substitute	Note
1	230833020000		Plate	1		
2	921400100156		Controller	1		
3	910200200036		Screw	5		
4	910400500018		Spring Washer	5		
5	910400100005		Flat Washer	5		
6	920100400006		Fuse Holder	1		
7	920100200002		Fuse	1		
8	910200500016		Screw	2		
9	920100400002		Fuse Holder	1		
10	910200500024		Screw	2		
11	910400100003		Flat Washer	6		
12	910400500003		Spring Washer	6		
13	920100100011		Fuse	1		
14	921900100014		Converter	1		
15	910200500039		Screw	6		
16	910400100004		Flat Washer	9		
17	910400500004		Spring Washer	9		
18	920800100011		Relay	1		
19	920800100010		Relay	1		
20	922000100005		Lamp	1		
21	910200500038		Screw	3		
22	921300400004		Holder	1		
23	535933020004		Copper Busbar	1		
24	920700100008		Contactor	1		
25	230833020001		Copper Busbar	1		
26	910200500034		Screw	4		

1= Supply as package. 2= Supply with constraints. 3= Phasing-out supply. 4= Supply as assembly. 5= Check other tables.

04 Wire Harness (Curtis) (230846033004)

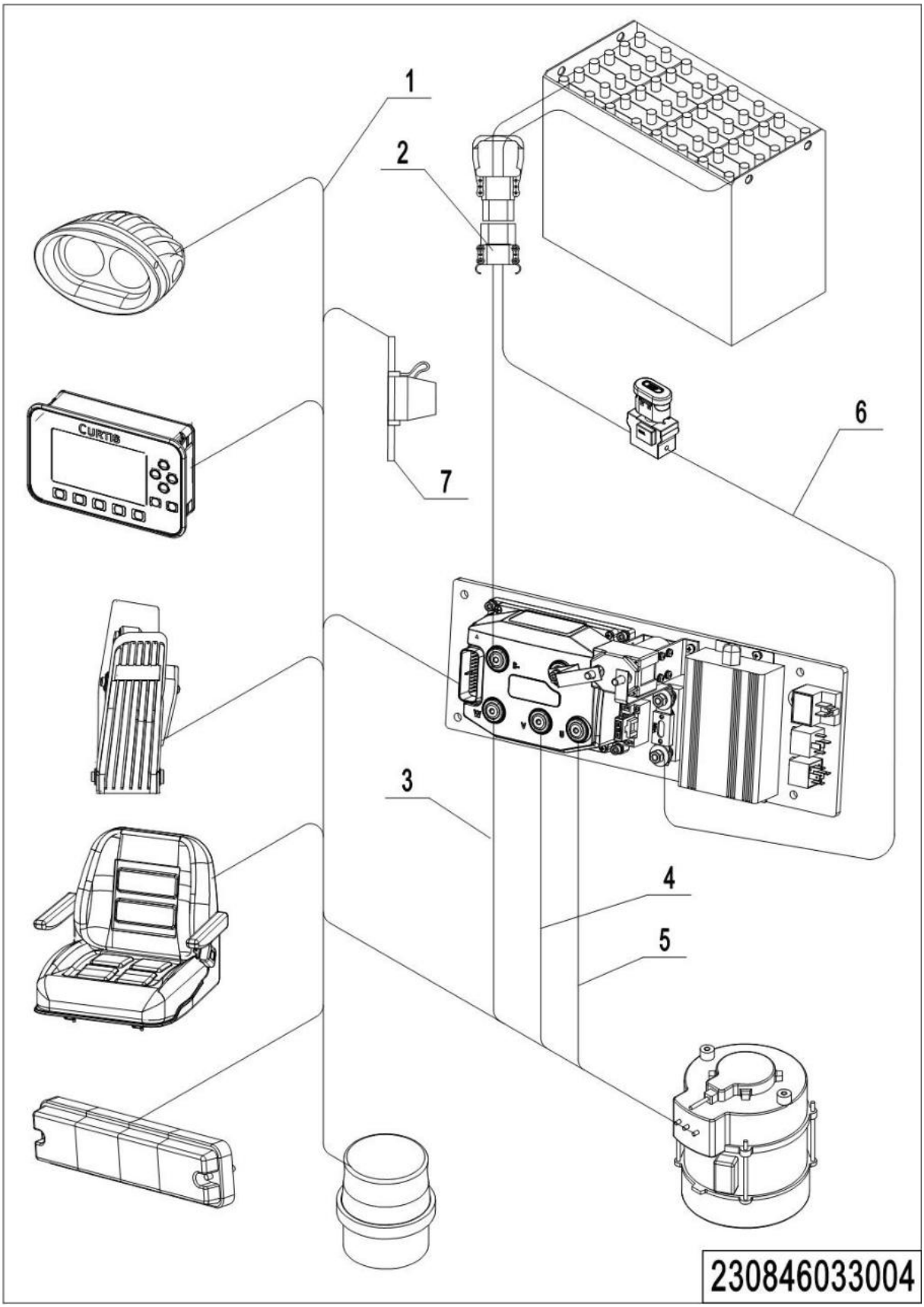

1= Supply as package. 2= Supply with constraints. 3= Phasing-out supply. 4= Supply as assembly. 5= Check other tables.

04 Wire Harness (Curtis)(230846033004)

No.	Item Code	Mark	Item Description	Qty.	Substitute	Note
1	230833010010		Wire Harness	1		
1	230833010012		Wire Harness	1		
1	230833010013		Wire Harness	1		20CE
1	230833010014		Wire Harness	1		20CE
2	230833010005		Wire Harness	1		
3	230833010001		Cable	1		
4	230833010002		Cable	1		
5	230833010003		Cable	1		
6	230833010004		Cable	1		
7	920100200010		Fuse	1		

05 Charger (230846036501)

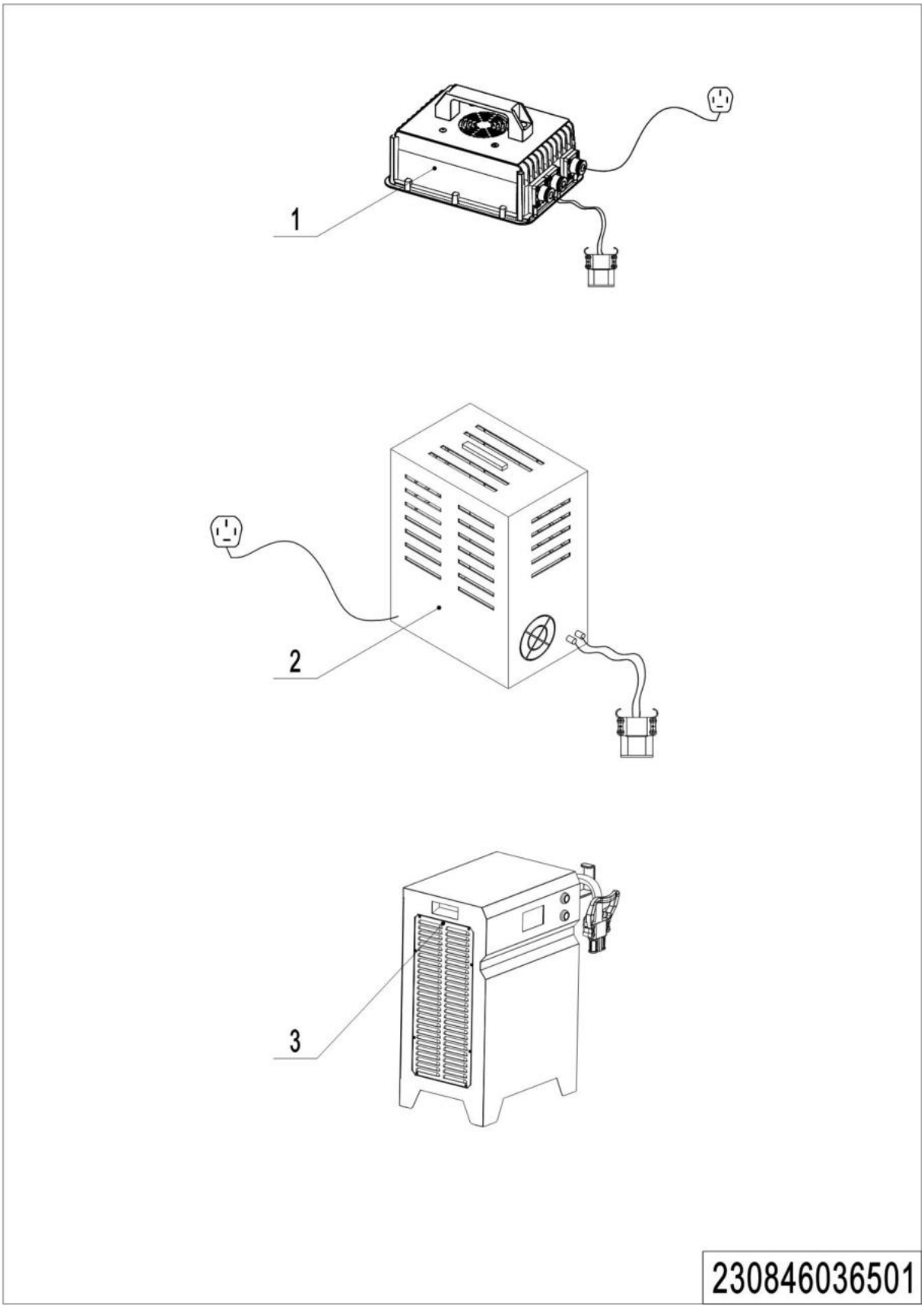

1= Supply as package. 2= Supply with constraints. 3= Phasing-out supply. 4= Supply as assembly. 5= Check other tables.

05 Charger (230846036501)

No.	Item Code	Mark	Item Description	Qty	Substit	Note
1	921000200543		Charger48V35A(Asia-CHN)	1		Apply to 240Ah vs 270Ah batteries
1	272536512101		Charger48V/35A(EU)	1		Apply to 240Ah vs 270Ah batteries
2	921000200163		Charger48V40A(Aisa-CHN)	1		Apply to 300Ah batteries
2	921000200165		Charger48V40A(EU)	1		Apply to 300Ah batteries
3	921000200406		Charger 48V150A (Aisa-	1		
3	921000200451		Charger 48V150A (ZA)	1		
3	921000200696		Charger48V150A(US)	1		
3	921000200712		Charger48V150A(AUS)	1		
3	921000200428		Charger 48V100A (Aisa-	1		
3	921000200770		Charger48V100A(Aisa-	1		
3	921000200716		Charger48V100A(EU)	1		
3	921000200717		Charger48V100A(US)	1		
3	921000200718		Charger48V100A(US)	1		
3	921000200771		Charger48V150A(Aisa-	1		
3	921000200773		Charger48V150A(AUS)	1		
3	921000200719		Charger48V150A(EU）	1		
3	921000200720		Charger48V150A(US)	1		
3	921000200711		Charger48V25A(US)	1		

1= Supply as package. 2= Supply with constraints. 3= Phasing-out supply. 4= Supply as assembly. 5= Check other tables.

06 Traction Battery (230846037001)

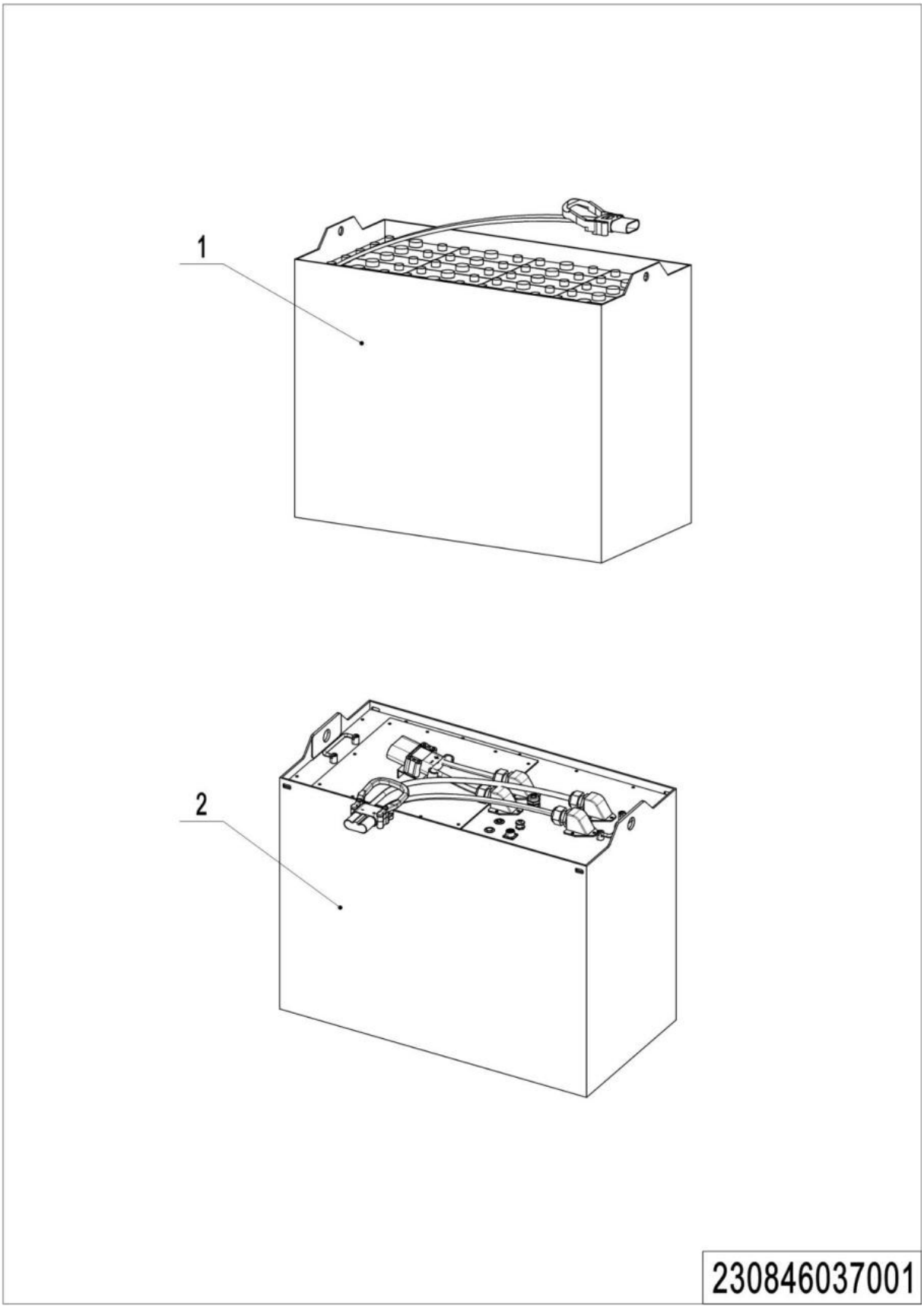

1= Supply as package. 2= Supply with constraints. 3= Phasing-out supply. 4= Supply as assembly. 5= Check other tables.

06 Traction Battery (230846037001)

No.	Item Code	Mark	Item Description	Qty.	Substitute	Note
1	230837020000		Battery48V240Ah	1		
1	230837020001		Battery48V270Ah	1		
1	230837020002		Battery48V300Ah	1		
1	920600100490		Battery48V240Ah(Bolted,EN	1		
1	920600100554		Battery48V270Ah(Bolted,EN	1		
1	920600100491		Battery48V300Ah(Bolted,EN	1		
2	920600100421		Li Battery48V200Ah	1		
2	920600100422		Li Battery48V300Ah	1		

Chapter 7: Others

01 Labels and Decals (230846047002)

1= Supply as package. 2= Supply with constraints. 3= Phasing-out supply. 4= Supply as assembly. 5= Check other tables.

01 Labels and Decals (230846047002)

No.	Item Code	Mark	Item Description	Qty.	Substitute	Note
1	941200300002		Label	1		
2	941200300008		Label	4		

1= Supply as package. 2= Supply with constraints. 3= Phasing-out supply. 4= Supply as assembly. 5= Check other tables.

Appendix

01 Electrical diagram (QT controller) (230846045501)

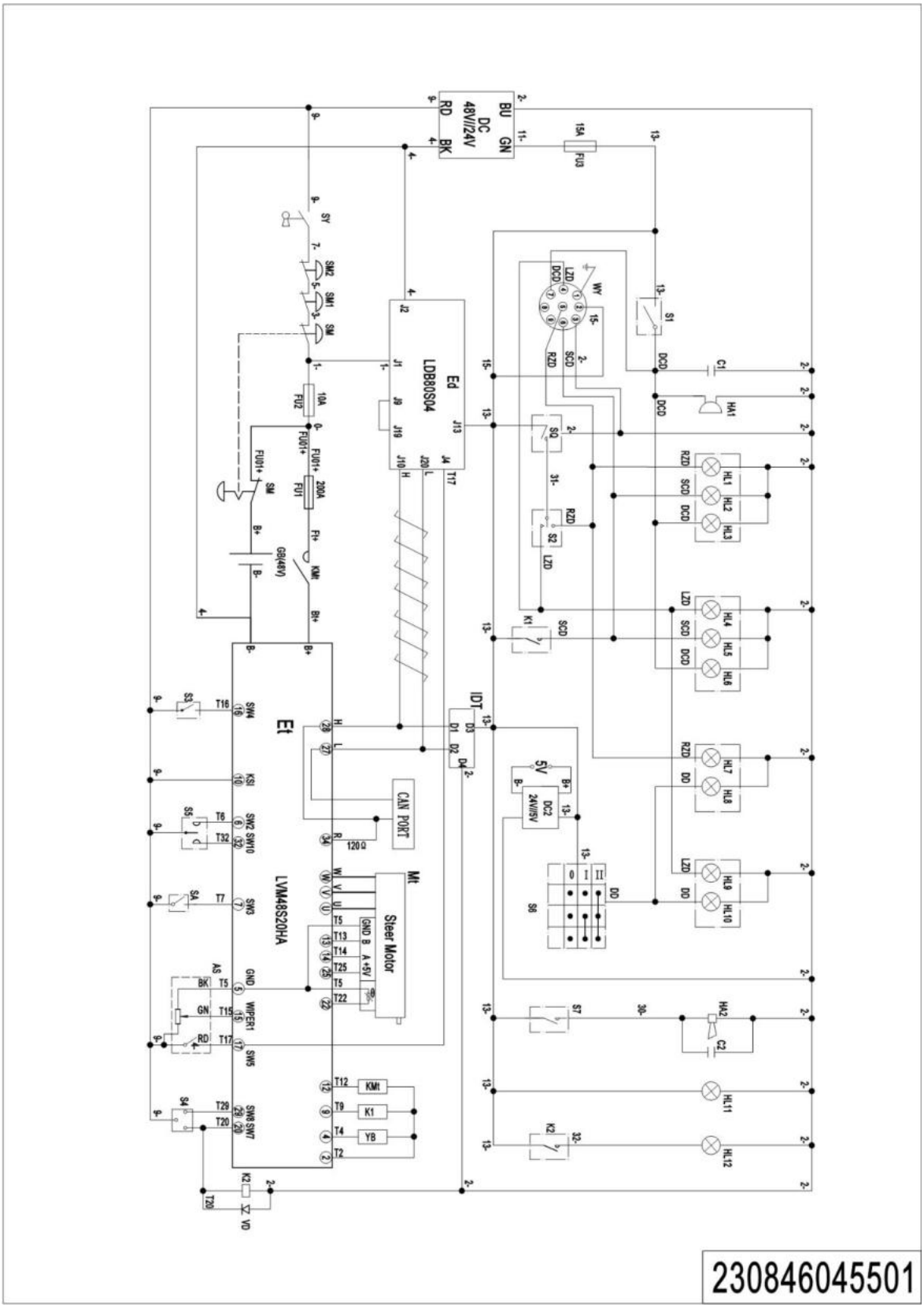

1= Supply as package. 2= Supply with constraints. 3= Phasing-out supply. 4= Supply as assembly. 5= Check other tables.

02 Electrical diagram (QT controller) with pin-code lock (230846045502)

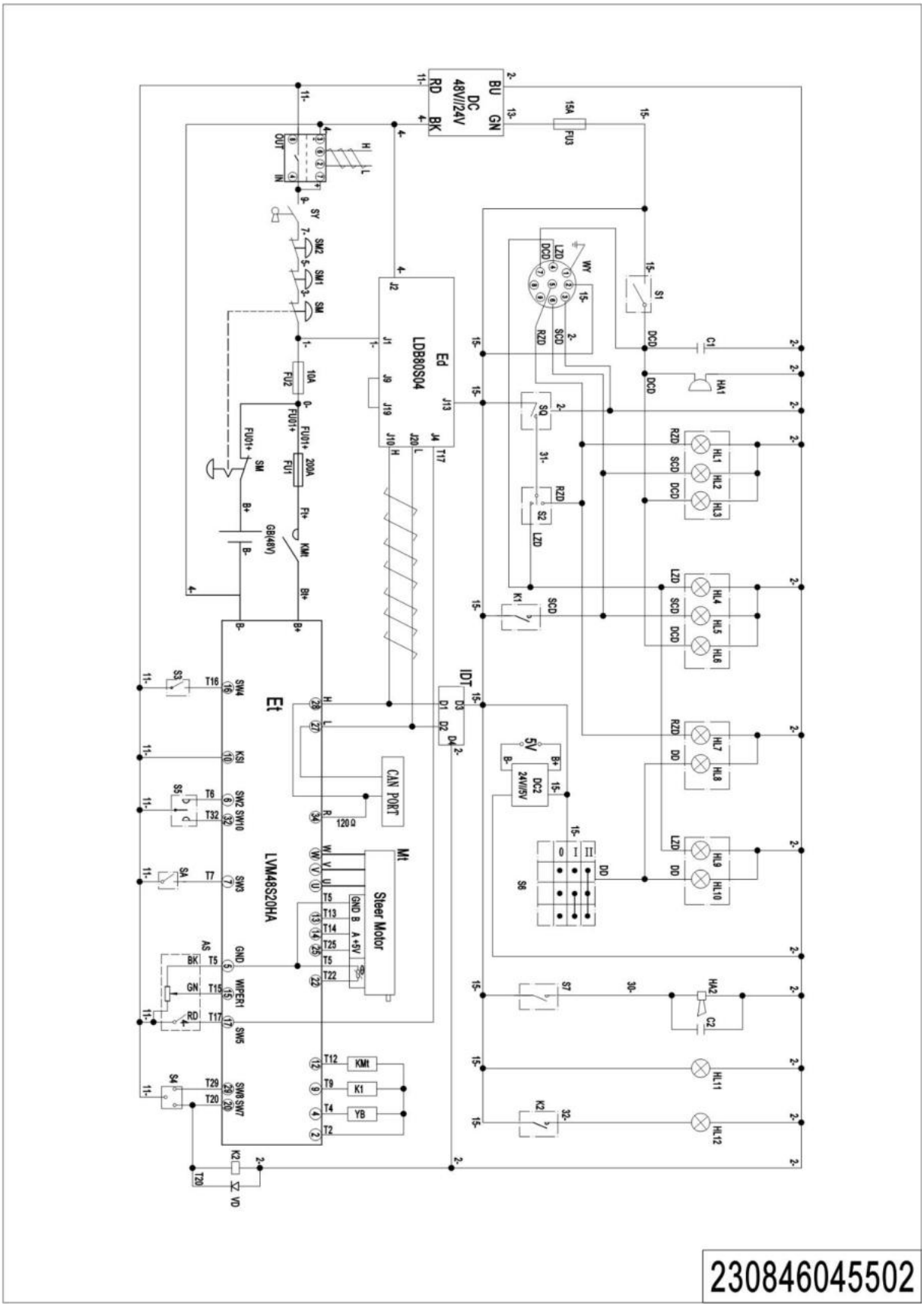

230846045502

03 Electrical diagram (Curtis controller) (230846045503)

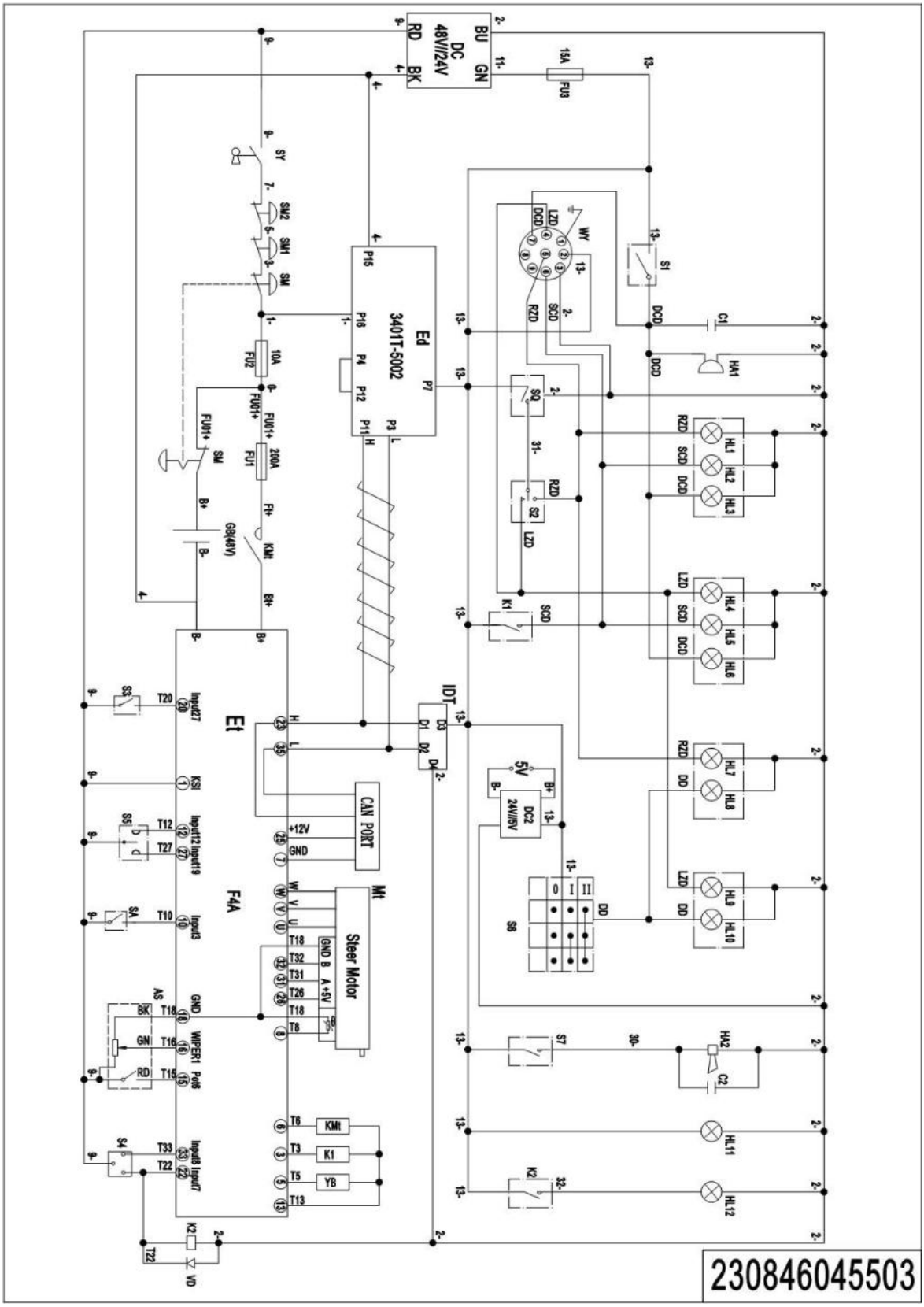

1= Supply as package. 2= Supply with constraints. 3= Phasing-out supply. 4= Supply as assembly. 5= Check other tables.

04 Electrical diagram(Curtis controller)with pin-code lock(230846045504)

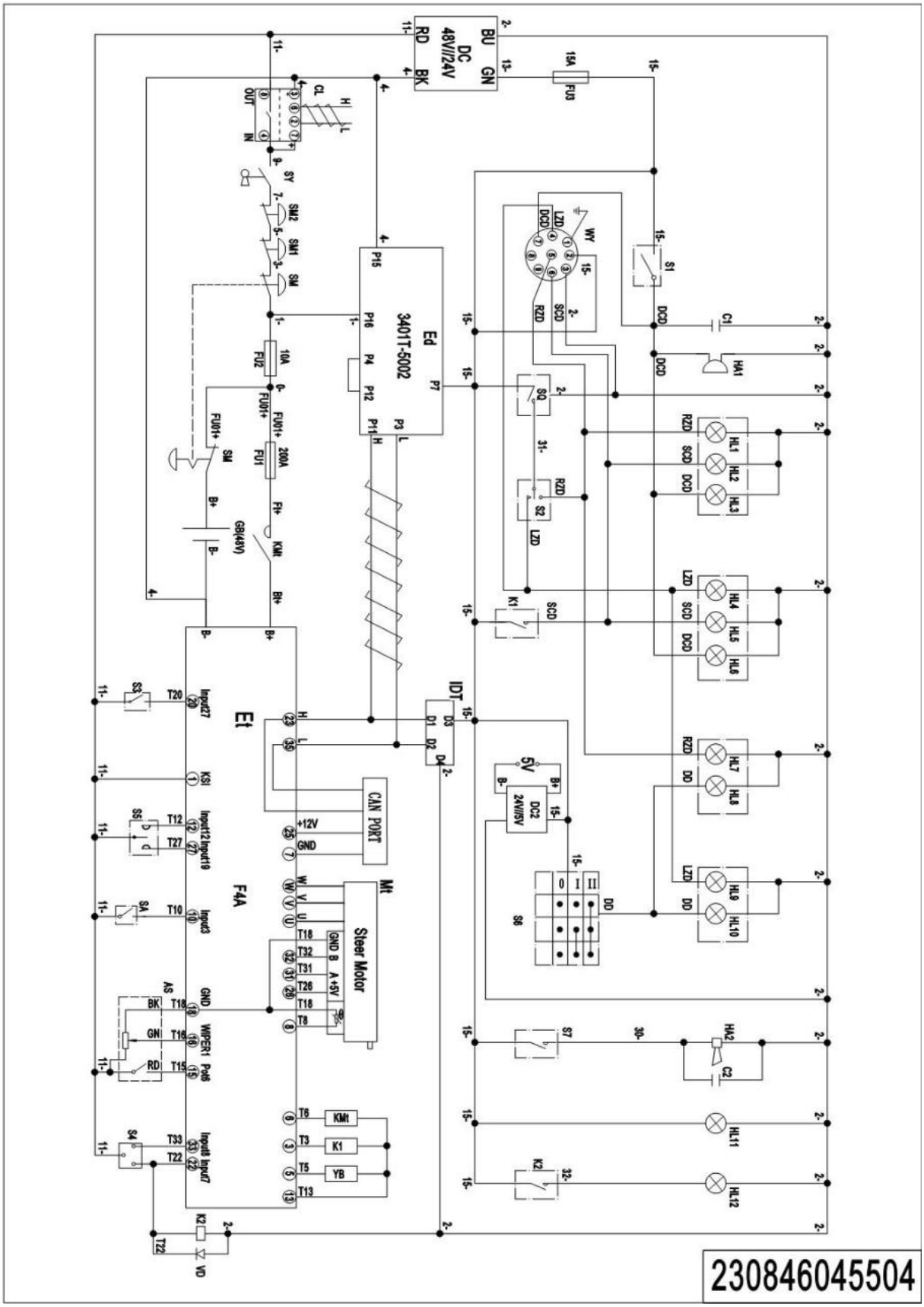

230846045504

1= Supply as package. 2= Supply with constraints. 3= Phasing-out supply. 4= Supply as assembly. 5= Check other tables.

05 Electrical diagram (Curtis controller) (230846045505) 20CE

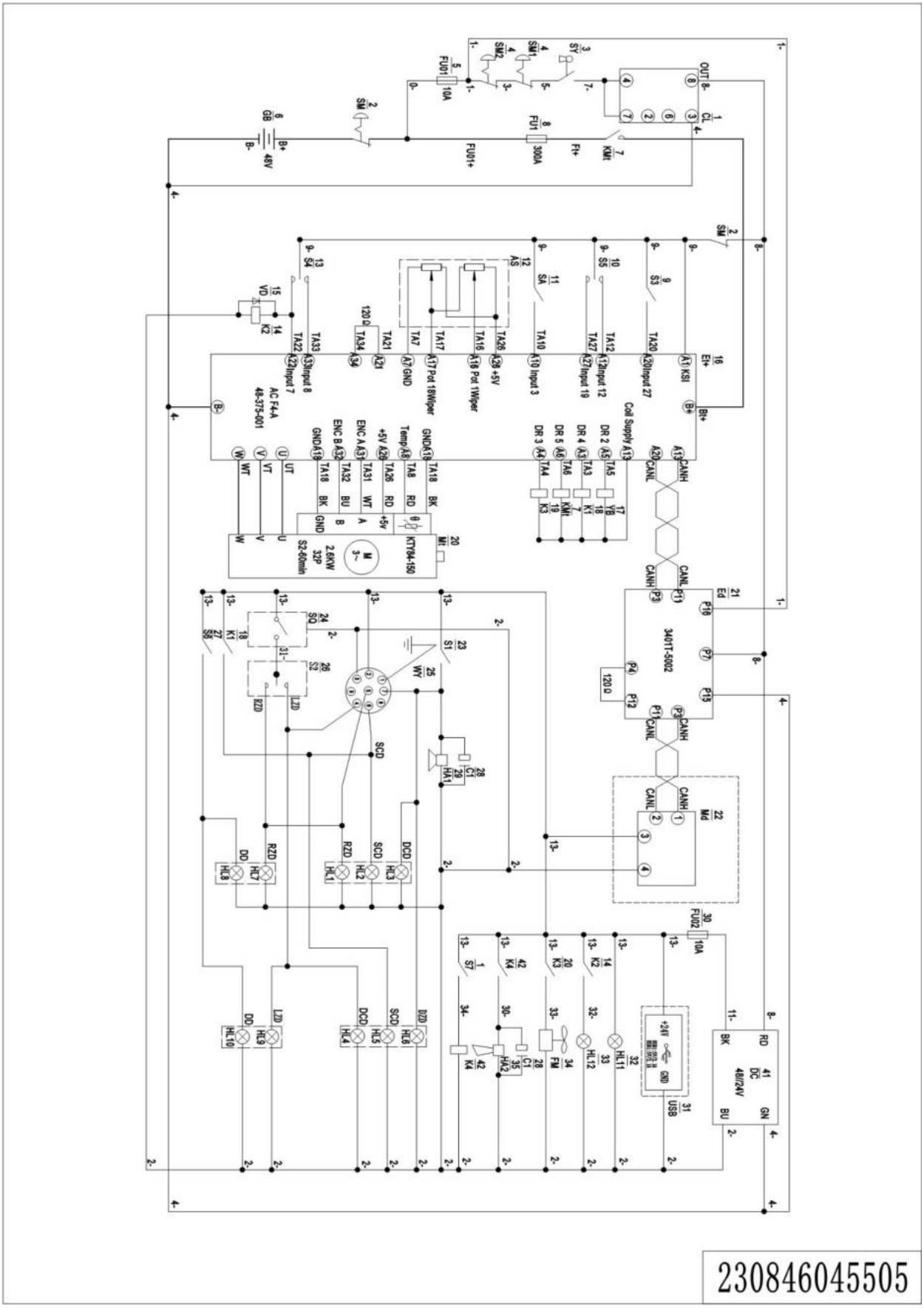

06 Electrical diagram(Curtis controller)with pin-code lock(230846045506) 20CE

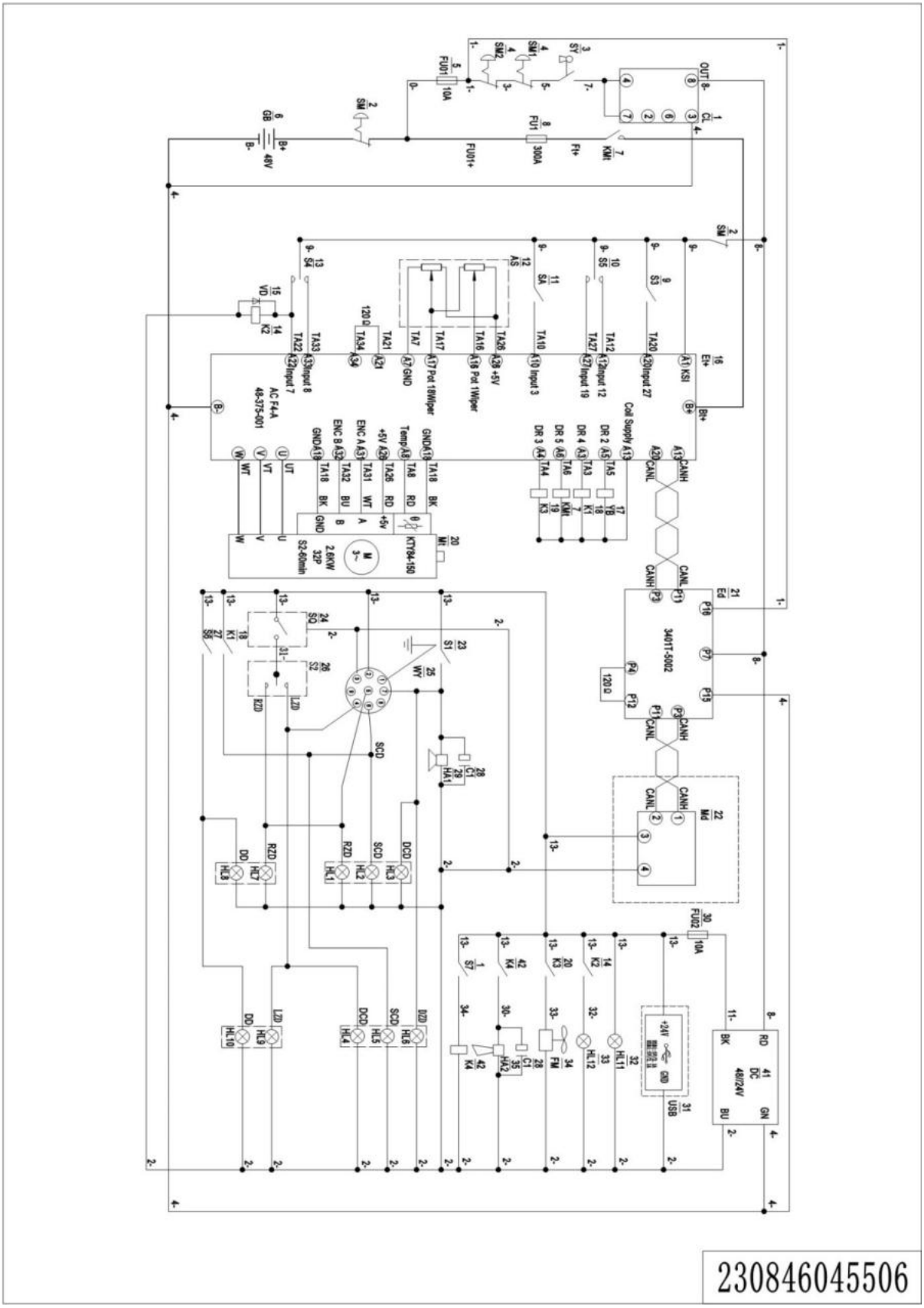

1= Supply as package. 2= Supply with constraints. 3= Phasing-out supply. 4= Supply as assembly. 5= Check other tables.

07 Consumable Parts List

No.	Item Code	Item Description	Qty.	Chapter/ Section/ Number
1	940500200016	Bushing	2	Chapter 2/01/1.20
2	910700200020	Bearing	4	Chapter 3/01/20
3	940500100027	Bushing	2	Chapter 3/02/4
4	941101000006	Bearing	1	Chapter 3/02/27
5	940500200018	Bushing	2	Chapter 4/02/27
6	230813520001	Spacer Bush	4	Chapter 5/01/1
7	910700900004	Bearing	2	Chapter 5/01/7
8	920100200002	Fuse	1	Chapter 6/01/7 Chapter 6/03/7
9	920100100024	Fuse	1	Chapter 6/01/13
10	920100100011	Fuse	1	Chapter 6/03/13
11	920100200010	Fuse	1	Chapter 6/02/7 Chapter 6/04/7

1= Supply as package. 2= Supply with constraints. 3= Phasing-out supply. 4= Supply as assembly. 5= Check other tables.