NOBLELIFT

INSTRUCTION MANUAL

Towing Tractor

TE10Li

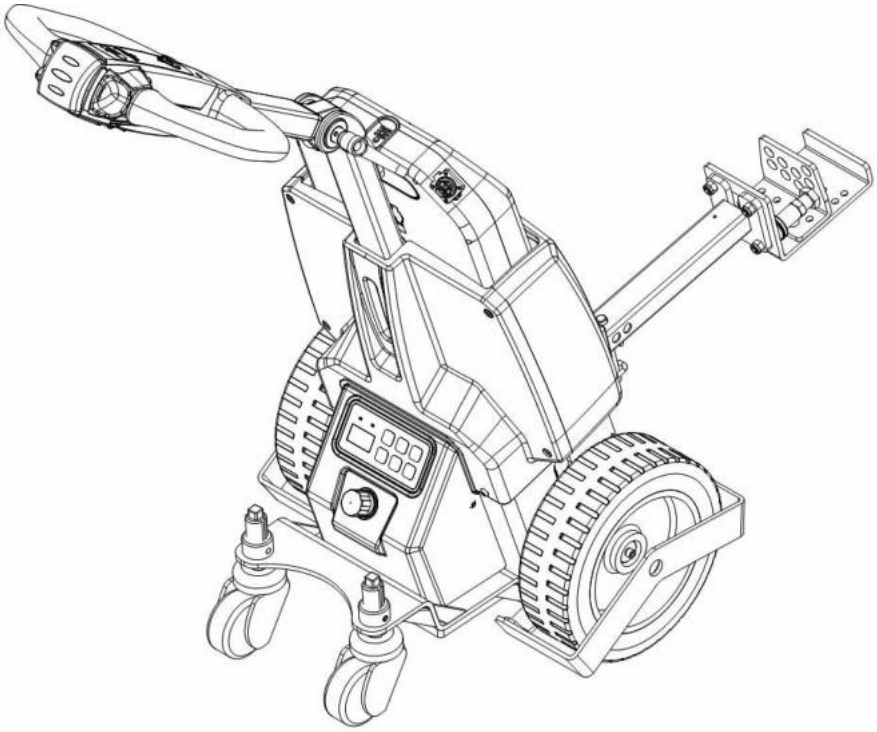

WARNING

Do not use the towing tractor before reading and understanding these operating instructions.

NOTE:

- **Please check the designation of your present type at the last page of this document as well as on the ID-plate.**
- **Keep this manual for future reference.**

Version 11/2022

TE10Li-SMS-001-EN

FOREWORD

Before operating this towing tractor, read this ORIGINAL INSTRUCTION MANUAL carefully and understand the usage of the tractor completely. Improper operation could create danger.
This manual describes the usage of different electric towing tractors. When operating and servicing the truck, make sure, that it applies to your type.

Keep this manual for future reference. If warning/caution labels are damaged or get lost, please contact your local dealer for replacement.
This towing tractor complies with the requirements according to EN 3691-1; -5 (Industrial trucks- safety requirements and verification, part 1; part 5), EN 12895 (Industrial trucks- electromagnetic compatibility), EN 12053 (Safety of industrial trucks- test methods for measuring noise emissions), EN 1175: 2020 (Safety of industrial trucks - Electrical/electronic requirements), assumed the truck is used according to the described purpose.
The noise level for this machine is below 70 dB(A) according to EN 12053.

ATTENTION:

- Environmentally hazardous waste, such as batteries, oil and electronics, will negatively affect the environment or human health, if handled incorrectly.

- The waste packages should be sorted and put into solid dustbins according to the materials and be collected disposal by local special environment protection bureau. To avoid pollution, it's forbidden to throw away the wastes randomly.

- To avoid leaking during the use of the products, the user should prepare some absorbable materials (scraps of wooden or dry duster cloth) to absorb the leaking oil in time. To avoid second pollution to the environment, the used absorbable materials should be handed in to special departments in terms of local authorities.

- Our products are subject to ongoing developments. Because this manual is only for the purpose of operating /maintaining the towing tractor, therefore please have an understanding that there is no guarantee out of particular features out of this manual.

NOTE: In this manual, the left sign indicates warning and hazard. Failure to comply with this instruction may result in death or serious injury.

Copyright

Copyright of these instructions remains with the company that indicated on the CE- certificate at the end of this manual. For trucks sold within USA, copyright remains with the company that indicated on the company sticker.

TABLE OF CONTENTS

1. CORRECT APPLICATION 3
2. TRUCK DESCRIPTION 4
   a. Assembly Overview 4
   b. Main technical data 5
   c. Description of the safety and warning labels (for Europe and other market excepting USA) 7
   d. Identification plate 8
3. WARNINGS, RESIDUAL RISK AND SAFETY INSTRUCTIONS 8
4. COMMISSIONING, TRANSPORT, DECOMMISSIONING 9
   a. Commissioning 9
   b. Lifting by crane and transport 9
   c. Decommissioning 10
5. DAILY INSPECTION 10
6. TRUCK OPERATION 11
   a. Parking 11
   b. Traveling 11
   c. Steering 12
   d. Braking 12
   e. Malfunctions 12
   f. Emergency 12
7. DISPLAY UNIT 13
   a. Introduction 13
   b. Main parameters of display unit 13
   c. Function description 13
   d. Display unit indication 14
8. Battery - Servicing, Recharging, Replacement 16
   a. Description of the lithium-ion battery 16
   b. Battery Decals 17
   c. Safety Instructions, Warning Indications and other Notes 19
   d. Charging the battery 26
   e. Battery removal and installation 29
9. REGULAR MAINTENANCE 31
   a. Maintenance checklist 31
   b. Lubricating points 32
   c. Checking electrical fuses 33
10. TROUBLE SHOOTING 33
11. WIRING/ CIRCUIT DIAGRAM 34
   a. Electrical diagram 34
12. DECLARATION OF CONFORMITY (valid, if sold within EU) 35

1. CORRECT APPLICATION

It is only allowed to use this electric towing tractor according to this instruction manual.

Improper use can lead do human injuries or equipment damage. The operator/ the operating company has to ensure the correct usage and has to ensure that this towing tractor is used only by trained and authorized staff.

The towing tractor has to be used on substantially firm, smooth, prepared, level and adequate surfaces. The truck is intended to be used for indoor applications with ambient temperatures between +5°C and + 40°C and for medium load applications without crossing permanent obstacles or potholes.

The capacity is marked on capacity sticker as well on the Identification plate. The operator has to pay attention to these warnings and safety instructions.
Operating lighting must be minimum 50 Lux.

Modification

No modifications or alterations to this towing tractor which may affect, for example, capacity, stability or safety requirements of the truck, shall be made without the prior written approval of the original truck manufacturer, its authorized representative, or a successor thereof. This includes changes affecting, for example braking, steering, visibility and the addition of removable attachments. When the manufacturer or its successor approve a modification or alteration, they shall also make and approve appropriate changes to capacity sticker, decals, labels and operation and maintenance manuals.

Only in the event that the truck manufacturer is no longer in business and there is no successor in the interest to the business, may the user arrange for a modification or alteration to a powered industrial truck, provided, however, that the user:

a) arranges for the modification or alteration to be designed, tested and implemented by an engineer(s) expert in industrial trucks and their safety,

b) maintains a permanent record of the design, test(s) and implementation of the modification or alteration,

c) approves and makes appropriate changes to the capacity plate(s), decals, tags and instruction handbook, and

d) affixes a permanent and readily visible label to the truck stating the manner in which the truck has been modified or altered, together with the date of the modification or alteration and the name and address of the organization that accomplished those tasks.

By not observing these instructions, the warranty becomes void.

2. TRUCK DESCRIPTION

a. Assembly Overview

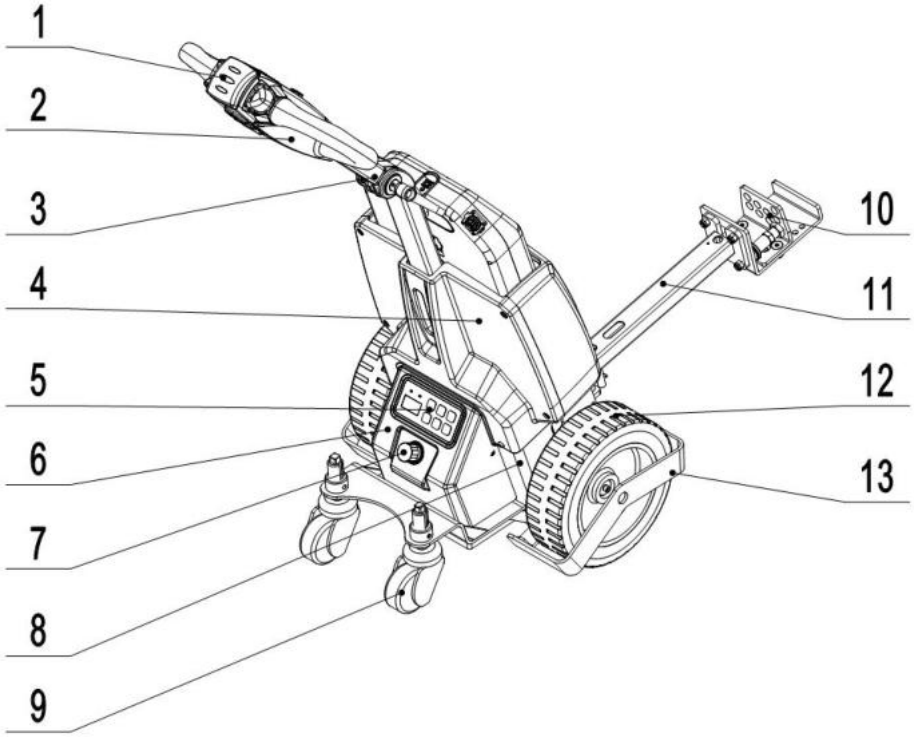

Fig. 1: Assembly overview

1. Safety (belly) button
2. Control handle
3. Tiller rod
4. Battery cover
5. Display unit
6. Electrical components housing
7. Emergency disconnect button
8. Chassis
9. Castor
10. Clamp
11. Coupling arm
12. Drive wheel
13. Foot protection

b. Main technical data

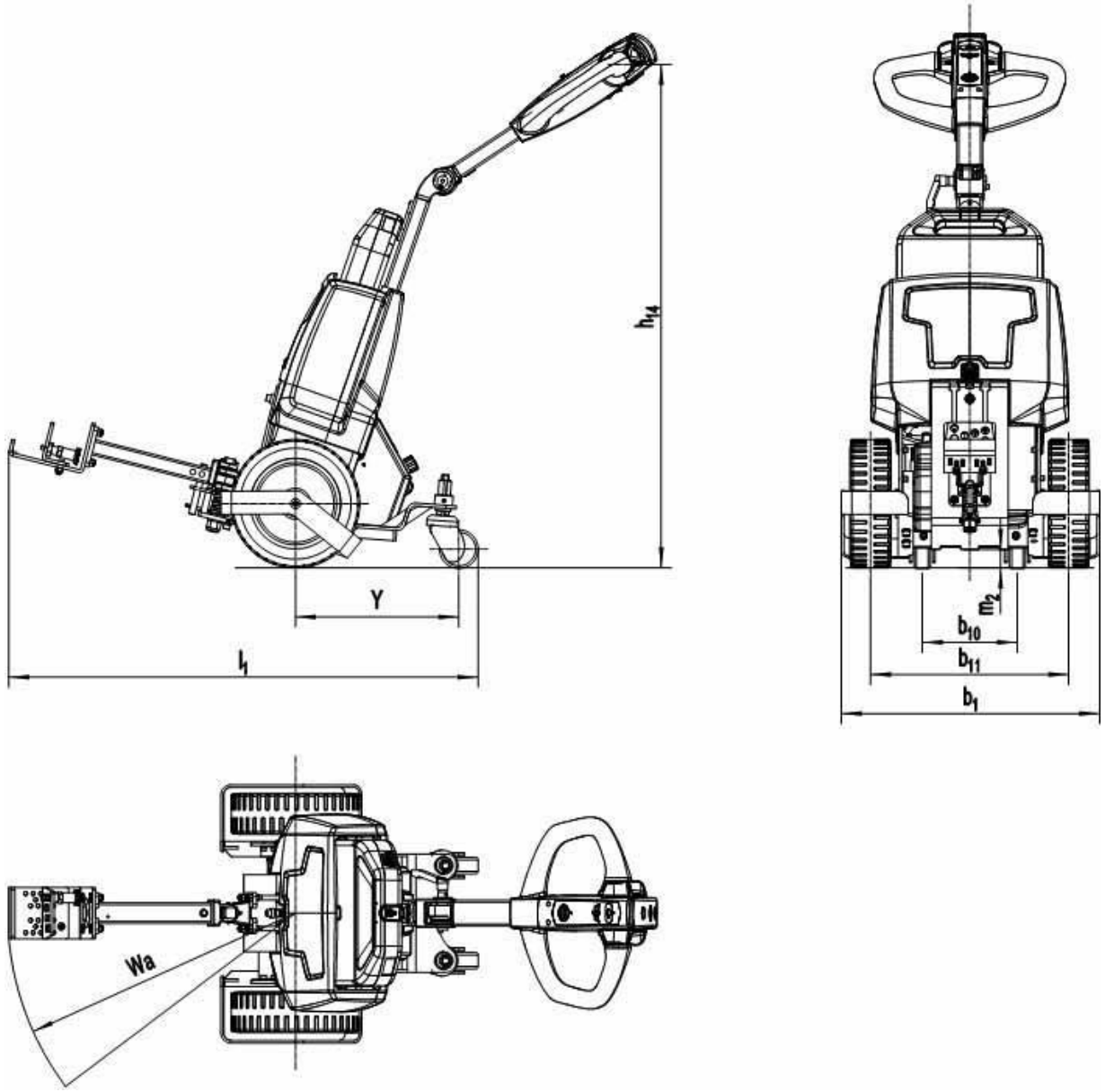

Fig. 2: Technical data

Table 1: Main technical data for standard version

Type sheet for industrial truck acc. to VDI 2198				
Distinguishing mark	1.2	Manufacturer's type designation		TE10Li
	1.3	Drive: electric (battery type, mains, ...), diesel, petrol, fuel gas		Battery
	1.4	Operator type: hand, pedestrian, standing, seated, order-picker		Pedestrian
	1.5	Rated capacity/ rated load	Q (t)	1.0
	1.7	Rated drawbar pull	*F* (N)	200
	1.9	Wheelbase	*Y* (mm)	325
Weight	2.1	Service weight (without battery)	kg	67
	2.3	Axle loading, unladen front/ rear	kg	55/19
Tyres/ chassis	3.1	Tires		Rubber
	3.2	Tire size, front	∅ x w (mm)	∅250X80
	3.3	Tire size, rear	∅ x w (mm)	∅75X32
	3.5	Wheels, number front/ rear(x=driven wheels)		2X+2/—
	3.6	Tread, front	b_{10} (mm)	185
	3.7	Tread, rear	b_{11} (mm)	385
Dimensions	4.9	Height drawbar in driving position min./ max.	h_{14} (mm)	750/1150
	4.19	Overall length	l_1 (mm)	915
	4.21	Overall width	b_1 (mm)	503
	4.32	Ground clearance, centre of wheelbase	m_2 (mm)	35
	4.35	Turning radius	Wa (mm)	560
Performance	5.1	Travel speed, laden/ unladen	km/h	4.5/4.9
	5.5	Drawbar pull, laden/ unladen	N	200 /–
	5.6	Max. drawbar pull, laden/ unladen	N	550/–
	5.10	Service brake		Electromagnetic
Electric-engine	6.1	Drive motor rating S2 30min	kW	0.4
	6.3	Battery acc. to DIN 43531/35/36 A, B, C, no		No
	6.4	Battery voltage/ nominal capacity K_5	(V)/(Ah)	24/36
	6.5	Battery weight (+/-5%)	kg	7.5
Addition data	8.1	Type of drive unit		DC-Speed Controler
	10.7	Sound pressure level at driver's seat	dB (A)	<70

c. Description of the safety and warning labels (for Europe and other market excepting USA)

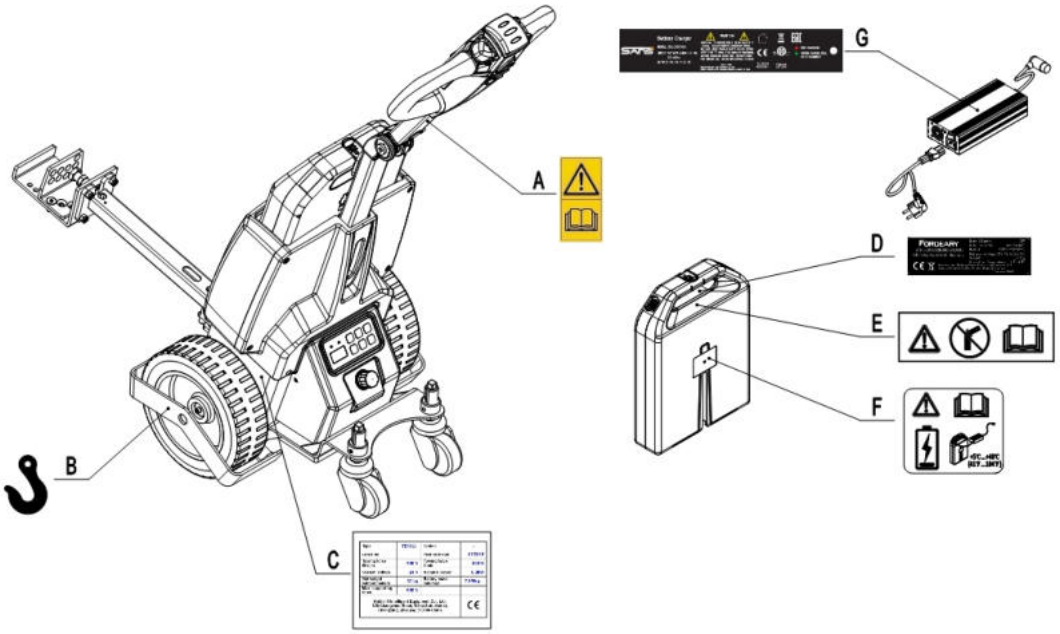

Fig. 3: Safety and warning labels

A Information notice: “Observe operating instructions”
B Attachment point for loading by crane
C Identification plate (ID-plate)
D Battery ID plate
E Warning notice: “Avoid collision”
F Battery warning decals
G Charger ID plate

This towing tractor is equipped with an emergency disconnect switch (7) which stops driving functions and engages the fail-safe electromagnetic brake when it is activated. By turning this button clockwise, the truck can be operated after entering the access code on pin-code panel.

To prevent unauthorized access, press emergency switch (7) or press “X” button of pin-code panel.
This truck is equipped with a red collision safety (belly) button (1) which changes the travel direction if the truck comes into contact with a person. The truck brakes, travels away from the operator and stops. This prevents the truck driving into the operator.

Follow the instructions given on the labels and decals, replace them if they are damaged or missing.

d. Identification plate

Towing Tractor			
Type	TE10Li	Rated capacity	1000 kg
Rated voltage	24 V	Drive motor system	DC
Battery mass, max.	8 kg	Battery mass, min.	7 kg
Net weight w/o. battery	67 kg	Rated coupling pull	200 N
Rated power	400 W	Max. coupling pull	550 N
Serial No.	XXXXXXXXXX	Manufacture Date	XXXXXXXXXX
Manufacturer XXXXXXXXXXXXXXX Address XXXXXXXXXXXXXXX			

Fig. 4 Identification plate

The identification plate layout is subject to the label that posted on the truck.

3. WARNINGS, RESIDUAL RISK AND SAFETY INSTRUCTIONS

DO NOT

- Allow other person than the operator to stand in front of or behind the truck.
- Overload the truck.
- Put foot in front of the wheels, which may cause injury.
- Push or pull loads.
- Operate the truck without manufacturer's written consent.

Practice maintenance work according to regular inspection. This truck is not designed to be water resistant, please operate the truck in dry condition. Prolonged continuous operation might cause damage to the power pack.

- When operating this electric towing tractor, the operator has to wear safety shoes.
- This truck is intended to be used for indoor applications with ambient temperature range between +5°C and + 40°C.
- The operating lighting must be 50 Lux at least.
- To prevent unintended sudden movements when the truck is not in use (i.e. from another person, etc.), press emergency disconnect switch (7) or press “X” button of pin-code panel.

4. COMMISSIONING, TRANSPORT, DECOMMISSIONING

a. Commissioning

Table 2: Commissioning data

Type	TE10Li
Service weight (without battery)	67kg
Dimensions [mm]	978x490x1235

After receiving the new towing tractor or for re-commissioning, please perform the following steps before (firstly) operating the truck:

- Check if all parts are included and without damage.
- Check the tiller and verify the assembly.
- Check the battery charge status (see chapter 8).
- Carry out the daily inspections as well as functional checks.

b. Lifting by crane and transport

Lifting by crane

USE DEDICATED CRANE AND LIFTING EQUIPMENT.
DO NOT STAND UNDER LIFTED LOADS.
DO NOT WALK INTO OR STAND IN A HAZARDOUS AREA DURING LIFTING.

Park the truck securely and attach the crane lifting gear to the attachments points according to Fig. 5.

Transport

THE TRUCK MUST BE SECURELY FASTENED WHEN TRANSPORTED ON A LORRY OR A TRAILER.

Attach lashing straps to the truck and the transport vehicle and tension sufficiently according to Fig. 6.

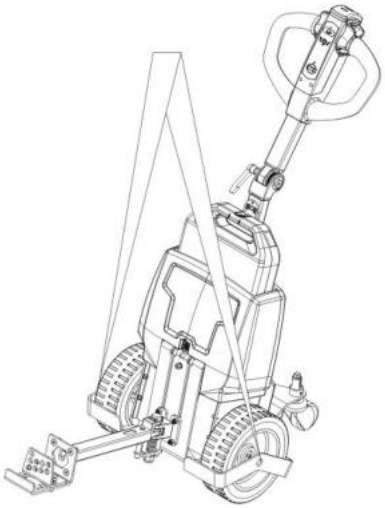

Fig. 5: Lifting by crane

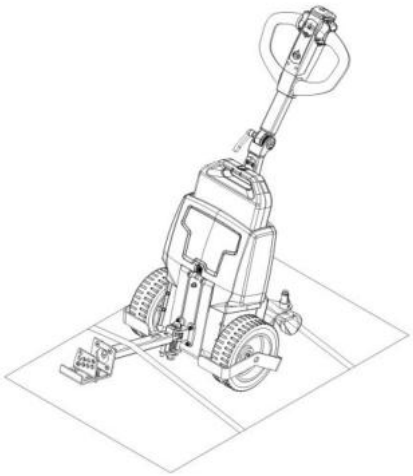

Fig. 6: Fixing points

c. Decommissioning

Prior to decommissioning storage, remove the load, lubricate the truck according to the lubrication diagram/ grease points mentioned in this manual (regular inspection), and eventually protect the truck against corrosion and dust. Remove the battery and jack up the truck securely, so that all the wheels are clear of the ground. This is the only way of ensuring that the wheels and wheel bearings are not damaged during storage.

Final decommissioning or disposal of the truck must be performed in accordance with the regulations of the country of use. In particular, regulations governing the disposal of oil, batteries and electronic and electrical systems must be observed. Hand the truck to a designated recycling company.

5. DAILY INSPECTION

This chapter describes the checks and operations to be performed before starting daily operation.

Daily inspection is effective to discover the malfunction or defects of this truck. Carry out the following checks to the truck before operation.

Remove the load from the truck.

IF ANY DEFECTIS FOUND ON THIS TRUCK, IT MUST BE TAKEN OUT OF SERVICE.

- Check the entire truck for deformation or cracks.
- Check the wheels for freedom of movement.
- Check the emergency disconnect switch to ensure the emergency braking function.
- Check if all bolts and nuts are tightened firmly.
- Visual check if there are any damaged electric wires.

6. TRUCK OPERATION

BEFORE OPERATING THIS TRUCK, PLEASE FOLLOW THE WARNINGS AND SAFETY INSTRUCTIONS (SEE CHAPTER 3).

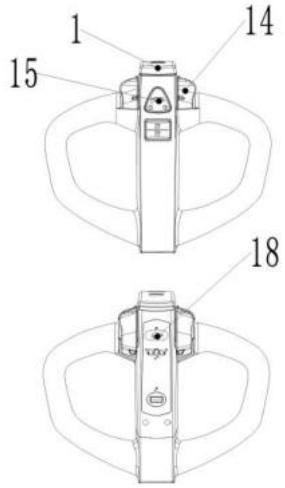

Fig.7: Control handle

There two ways to start this towing tractor:
The first way is entering the correct access code and pressing "√" key from pin-code panel (5).
The second way is activating the truck with RFID access card.

Press the horn button (Fig.7,15) to activate the audible warning signal.

a. Parking

PARKING THE TRUCK ON A SLOPE IS STRICTLY PROHIBITED.

This truck is equipped with an electromagnetic fail-safe stopping and parking brake.
Press the emergency disconnect switch (7).

b. Traveling

Switch on the truck by activation from pin-code panel, control the travel direction with the accelerator to drive direction (Fw) or load direction (Bw), as shown in Fig. 8.

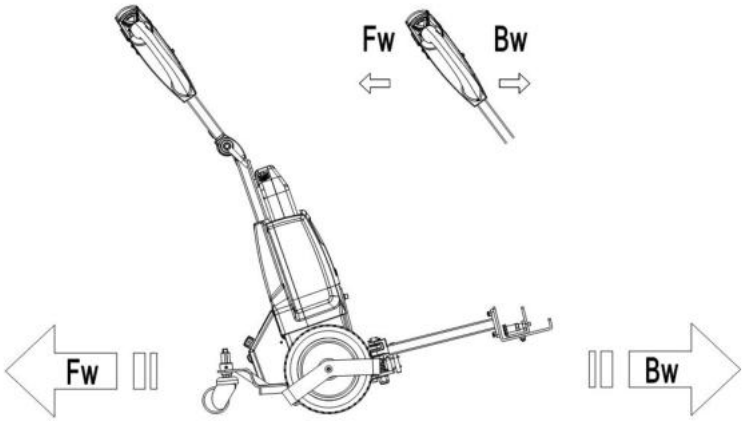

Fig. 8: Travel direction

Control the travel direction by turning the accelerator in your desired direction: drive direction (Fw) or load direction (Bw), as shown in Fig. 8.
Control the travel speed by turning the accelerator (Fig.7,14) carefully until the truck reaches your desired speed.
If you move the accelerator to the neutral "0" position, the controller decelerates the truck until the truck stops. If the truck stops, the parking brake is activated.
Carefully drive the truck to the destination. Observe the floor conditions and control the travel speed with the accelerator.
Press the turtle button (Fig.7,18) to enter into slow travel mode, travel slowly by turning the accelerator in the desired direction. Press the turtle button again to resume travelling at normal speed.

c. Steering

The truck is steered in the required direction by moving the tiller to the left or right.

d. Braking

PLEASE CHECK THE BRAKING DISTANCE BEFORE OPERATION.
THE BRAKING PERFORMANCE DEPENDS ON THE TRACK CONDITIONS AND THE LOAD CONDITIONS OF THE TRUCK.

The braking function can be activated in different ways:

- By setting the accelerator (Fig. 7, 14) to the neutral “0” position or by releasing the accelerator, the regenerative brake is activated. The truck brakes to a halt.
- By turning the accelerator (Fig. 7, 14) in the opposite direction, the regenerative brake is activated. The truck brakes and begins traveling in the opposite direction.
- Operate the collision safety switch (belly button) (Fig. 7, 1) to protect the operator from being crushed. If this switch is activated, the truck brakes and travels a short distance in the opposite direction.

e. Malfunctions

If there are any malfunctions or the truck is inoperative, please stop using the truck and activate the emergency disconnect switch (7) by pressing it. Immediately inform the supervisor and/or call your service support. If necessary, move the truck out of the operating area by using dedicated towing/ lifting equipment.

f. Emergency

In emergencies or in the event of tip over (or fall off a dock), keep safe distance immediately. If possible, activate the emergency disconnect switch (7) by pressing it. All electrical functions will be deactivated.

7. DISPLAY UNIT

This towing tractor is equipped with an LCD screen, pin-code panel and RFID access card.

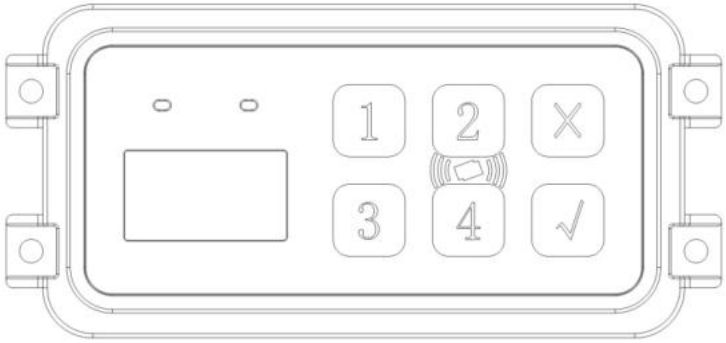

Fig. 9: Display unit

a. Introduction

Pin-code panel is an electronic system which is similar with an electronic access system. Truck is not able to be operated before entering the correct access code, the main purpose is to prevent unauthorized operation. In order to facilitate the operation, in addition to the pin-code access, the RFID access card is also available.

The display with LCD screen displays various truck data, such as the state of charge of the battery, working hour, slow travel mode, fault code, etc.

b. Main parameters of display unit

Rated working voltage: 12V-48V
Standby current: ≤25mA/24VDC
Communication: CAN communication, with fault code display, battery display, working hour display, RFID card and pin-code panel.
Default configuration: 1 set of access code (default 1234) and two round RFID cards.

c. Function description

Pin-code panel

The truck is equipped with a pin-code panel and RFID cards (maximum 5 RFID cards). The access code consists of 4 numbers (1~4).

RFID card

Put the RFID card close to the pin-code panel, if the RFID card is valid, the pin-code panel will emit a short beep, and then the blue indicator light is on, indicating that the pin-code panel is working normally.

Pin-code access

The truck is delivered with the access code “1234”, which can be used for immediate start.

After turning on the power, the green indicator light is on, and the display screen is off; enter the original access code "1234", confirm with “√” key - the green and blue indicator lights are on, the display screen is on, and the truck is ready for operation.

A new access code can be generated using the administrator password “3232”. Follow the steps below to change the access code with the administrator password:

- Enter administrator password “3232” and press “√” key.
- Enter the original access code and press “√” key.
- Enter the new access code and press “√” key, the access code has been changed.

Follow the steps below to reset the access code:

- Enter access code “123” and press “√” key.
- Enter access code “123” once more and press “√” key, the access code has been reset to “1234”.

Follow the procedure below to add additional RFID card:

- Enter access code “3434” and press “√” key.
- Swipe the new RFID card within 5 seconds.
- This pin-code panel supports maximum five cards.

d. Display unit indication

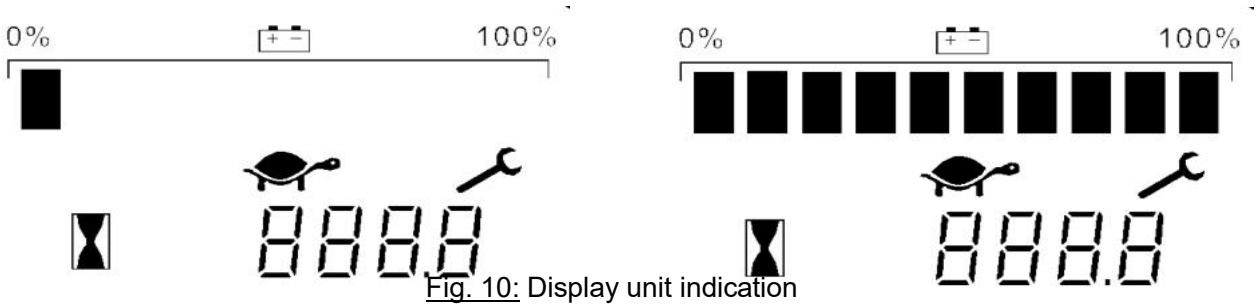

Fig. 10: Display unit indication

Battery discharged

Battery is fully charged

Working

An alpha-numeric liquid crystal display is fitted in the center of the display unit, which indicates the working hour of the truck.

Error code alarm

Special statuses appear in the display unit as error codes, which indicates the alarm state by the fault code corresponding to the type of alarm.

Charge status indicator of battery 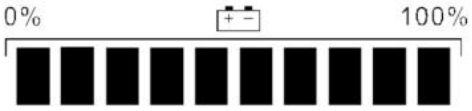

The charge status indicator of the battery is integrated in the LCD display unit on the control handle. The charge status is displayed in ten increments. Each is represented by a rectangle that corresponds to 10% of the battery charge. The rectangles gradually disappear as the battery discharges.

Turtle Symbol:

It is normally off, when it displays on the LCD screen, it indicates that the slow travel mode is activated, in which maximum speed and acceleration are reduced.

Monkey Wrench Symbol:

It is normally off, when it displays on the LCD screen, it indicates that there is request of programmed maintenance or the alarm state.

Hourglass **Symbol:**
It is normally off, when the hourglass symbol flashes, it indicates that the hour meter starts to count.

8. Battery - Servicing, Recharging, Replacement

a. Description of the lithium-ion battery

The lithium-ion battery is a battery with rechargeable cells, the battery is designed for industrial trucks and can withstand related vibrations during operation. The battery is equipped with special connections for charging and discharging operations. Do not try to install or connected improper connectors to the battery.

The battery is equipped with BMS – battery management system, which performs the control of battery condition and implements related safety protocols to protect the battery and cells from damages caused by operation or environmental conditions. The BMS controls the following safety functions and conditions: voltage, temperature, undervoltage, overvoltage, overtemperature and overcurrent.

Temperature range for using the battery is from +5°C to +40°C. Low temperatures reduce the effective battery capacity, high temperatures reduce the batteries life time.

Only approved battery chargers must be used to charge the lithium-ion battery.

b. Battery Decals

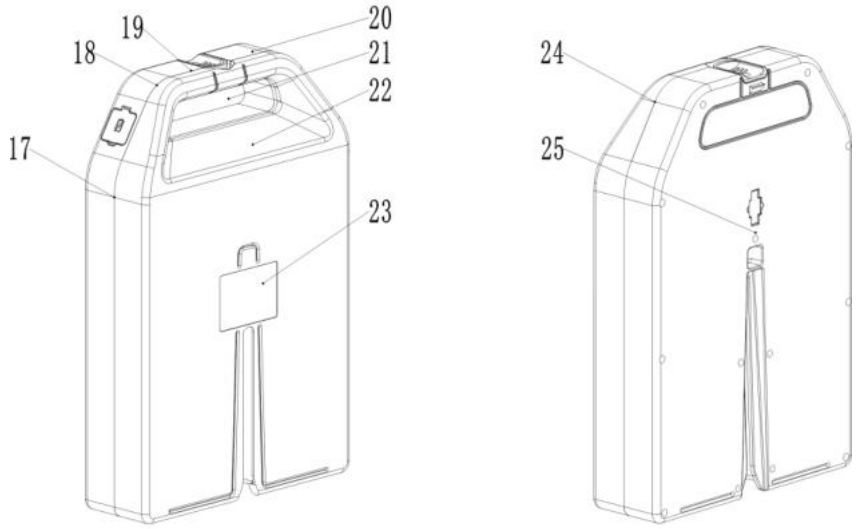

Fig.11: Battery Decals

Table 3: Battery Decals

Item	Description	Item	Description
17	Warning notice: “Do not dispose at will”	22	Warning notice: "Avoid collision”
18	Charging indication	23	Safety information
19	QC sticker	24	Serial number
20	Sign: "Capacity and nominal voltage"	25	Fuse location
21	Identification plate		

Battery identification plate

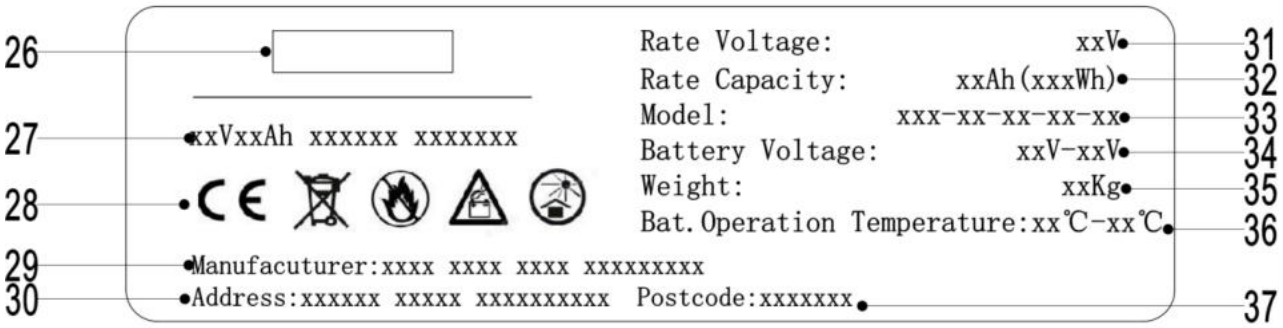

Fig.12: Battery identification plate

Table 4: Battery data plate

Item	Description	Item	Description
26	Manufacturer trademark	32	Battery capacity
27	Battery information	33	Model designation
28	CE mark and other safety labels	34	Voltage range
29	Battery manufacturer	35	Battery weight
30	Manufacturer address	36	Operating temperature range
31	Rated voltage	37	Zip code

c. Safety Instructions, Warning Indications and other Notes

Safety regulations for handling lithium-ion batteries

Do not try to make any repairs or servicing of lithium batteries

Risk of electric shock and burning

The battery's charging and discharging connectors have open terminals, avoid any body contacts, contamination or direct contacts with objects which can cause short circuit connection of terminals. Use necessary pre-cautions and protective caps to secure the open terminals. The connectors should be maintained in clean and dry conditions.

Use only batteries designed and approved by the manufacturer for the truck.
Do not try to modify or alter the battery.

Any damage or defects to the charger can result in accidents. Use only charger approved by the manufacturer of the truck, which is suitable for used battery

In case charger has any damages or defects, exclude the charger from operation and contact your service provider. Do not modify or try to repair the charger.

Improper use of charger or use of wrong charger can cause damages to a battery or charger. The operation voltage of the charger shall be subject to the charger specifications; the maximum charging voltage is 29,2V, the charging current is 8,0 or 12,0 A depending of battery capacity. If the operation voltage of the charger is out of the applicable voltage range, the charger or battery will be damaged, which may cause serious safety accidents. The charger must only be used for batteries supplied by the manufacturer.

Reversed connection of charging plug is prohibited. Follow the instruction for correct connection. For disconnection of charging plug use dedicated grip and never pull out the plug by means of cable.

Stop charging immediately if any abnormalities are detected, e.g. severe temperature increase, deformation of battery case, smoke, noise etc.

Intermediate charging

Lithium batteries support so called opportunity charging. The lithium battery, which is not fully discharged can be charged in any time. However, frequent opportunity charging not to the full charging state and stop of charging process before the appearance of corresponding indication of charger may result in dis-balance voltage of cells. In order to effectively deal with this phenomenon, charge the battery in full allowing the automotive balancing process to be completed at least once a week.

Potential hazards

If equipment is used according to its design purpose, following the correct operations procedures, there are no hazards anticipated.

The following hazards can arise in the event of improper use:

- Physical damage to the battery in case a battery falls or is deformed through impacts. Mechanical damages can cause leakages of harmful materials, fire or battery explosion.
- Short circuits may be caused by connecting the two battery terminals, for instance caused by water or intentional/unintentional connections.
- Temperature damages caused by location of batteries in overheated locations or being exposed to impact of fire, open sunlight etc. can cause leakages of harmful materials, fire or battery explosion.

In order to avoid fire, explosion and leakage of harmful materials, a safe place for storing batteries until the service arrives on site must satisfy the following criteria:

- Do not store in places where personnel is located.
- Do not store in places with valuable objects and close to valuable objects.
- A Co2 fire extinguisher must be available on demand.
- There should not be any fire or smoke detectors in the storage area in order to ensure that an automatic fire detection system is only activated in the event of actual danger (e.g. naked flames).
- No ventilation intake pipes should be in the facility to exclude spreading of discharged content within a building.

Examples of where to store a non-functional battery:

- Roofed outdoor position.
- Ventilated container.
- Covered fire resistant box with pressure and smoke discharge option.

Symbols - Safety and Warnings

Table 5: Symbols - Safety and Warnings

	Used lithium-ion batteries must be treated as hazardous waste. Lithium-ion batteries marked with the recycling symbol and the sign showing a crossed-out waste bin must not be disposed of with ordinary household waste.
	Avoid fire and short circuits due to overheating. Do not ignite or position an open flame, glowing embers, or sparks near the lithium-ion battery. Keep lithium-ion batteries away from strong heat sources.
	Caution! Battery short-circuit is prohibited.
	Protect the lithium-ion battery from solar radiation or other forms of heat radiation. Do not expose the lithium-ion battery to heat sources.

Explosion and fire hazard

Physical damage, thermal effects or incorrect storage in the event of a defect can result in explosions or fire. The battery materials can be flammable.

Particular hazard from combustion products

The lithium batteries may be damaged by a fire. When extinguishing a lithium battery fire, the following information must be taken into consideration.

Contact with combustion products can be hazardous

Fire produces combustion products, which can occur in the form of smoke, through leaking fluids, escaping gases, debris as well decomposition products of certain chemicals. These combustion products are substances that enter the body through the respiratory tract and/or the skin can produce and adverse effects such as choking.

Avoid contact with combustion products.
Use protective equipment.

Special firefighting protective equipment

Use self-contained breathing apparatus.
Wear protective equipment.

Additional firefighting instructions

To prevent secondary fires, the lithium-ion battery must be cooled from the outside. Fluids or solids must never be directed into the lithium battery.
Suitable extinguishing agents

- Carbon dioxide extinguisher (CO_2)
- Water (not on mechanically opened or damaged batteries)

Unsuitable extinguishing agents

- Foam
- Grease fire extinguishing agents
- Powder extinguishers
- Metal fire extinguishers (PM 12i extinguishers)
- Metal fire powder PL-9/78 (DIN EN 3SP-44/95)
- Dry sand

Instructions for cooling an overheated, non-physically damaged battery

This type of damage may be caused by a short circuit inside the battery, which may result in leakage of harmful materials, fire or battery explosion.

Material discharge

Battery electrolyte fluid can be hazardous

Electrolyte fluid can be discharged if the battery is physically damaged. Avoid its contact with skin or eyes. If the contact happened:

- Rinse the affected parts with big amount of water and request for medical assistance immediately.
- In case of skin irritation or if any substances are breathed in request the medical assistance immediately.

Precautionary measures for personnel

- Keep personnel away, avoid any contact with smoke or discharged materials.
- Block off the affected area and ensure its reasonable ventilation.
- Wear personal protective equipment. If vapors, dust or aerosols are presented use self-contained breathing apparatus.

Precautionary measures for the environment

Do not allow spilled fluids to enter the water system, drainage system or the underground water.

Cleaning measures

The leaked fluid must be removed professionally following the related protocols.

Battery lifetime and maintenance

The lithium-ion batteries are maintenance-free.

Full discharge can damage the battery

Self-discharge can cause the battery to fully discharged state. Full discharge shortens the service life of the battery and can cause deep discharge and activation of related safety protocols when battery will not be able to be charged anymore.

Before a long period of inactivity, the battery must be charged to at least 70%.
Re-charge the battery at least every 12 weeks.

If the battery is deeply discharged or if the battery temperature is below the permissible level, the battery will not charge. Deep discharged batteries can never be charged. Due to the risk of condensate formation, batteries that have been stored at 0°C or below must only be charged after natural warming up to at least +5°C, forced heating is forbidden.

Storage and safe handling

Storage of batteries

Deep Discharge can damage the battery

If the battery is not used for a long period of time, it can become damaged through discharge.

- Before a long period of inactivity, the battery must be charged to the level of at least 70%.
- Recommended to check and charge, if necessary, the battery every 4 weeks when not in use.
- The storage of fully charged battery reduces its lifetime. Recommended level of charge is in the range of 30% to 70%
- The temperature range for storing the battery is 0°C to 30°C.

Instructions for safe handling

New lithium-ion batteries are transported and stored with a charge status of at least <70 %.

- Do not modify the battery.
- Do not open, damage, drop, penetrate or deform the battery.
- Do not throw the battery into a fire.
- Protect the battery from overheating.
- Protect the battery from direct sun light.
- Follow storage and charging procedures

Failure to comply with these safety instructions can result in fire and explosion or the leakage of harmful materials.

Faults

If any damage is found to the battery or battery charger contact the service provider immediately. Do not open the battery.

Disposal and transport of a lithium-ion battery

Instructions for disposal

Lithium-ion batteries must be disposed of in accordance with the relevant national environmental protection regulations. Batteries must be treated as hazardous waste. Batteries must not be disposed with ordinary waste.

Shipping information

The lithium-ion battery is a hazardous material. The applicable regulations must be fulfilled during transportation.

Shipping functional batteries

Functioning batteries can be shipped in accordance with the related regulations

Shipping faulty batteries

To transport faulty lithium-ion batteries, contact the service provider. Faulty lithium batteries require following of special transporting procedures.

d. Charging the battery

Charge Status Indicator

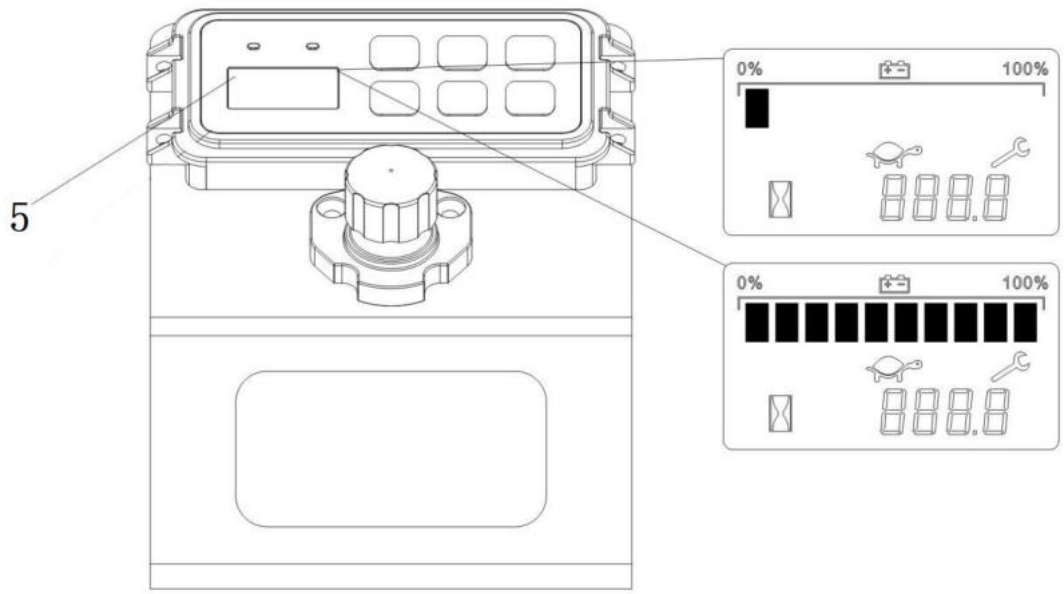

Fig. 13: Charge Status Indicator

The charge status indicator of the battery is integrated in the display unit (5).

The charge status is displayed in ten increments. Each is represented by a rectangle that corresponds to 10% of the battery charge.

The rectangles gradually disappear as the battery discharges. Special statuses appear in the display unit as error codes.

Table 6: Error codes

Code	The error code appears if ...	Effect
0	The battery charge is too low.	Lift function is deactivated.
91	Operation of the truck continues without first charging the battery.	Travel speed is reduced.

Charging the Battery with External Charger

Maintenance personnel

Batteries may only be charged, serviced or replaced by trained personnel. These operating instructions and the battery manufacturer's instructions must be observed when performing these operations.
Park the truck securely before carrying out any work on the batteries.

General information

- The charge status of the battery is indicated by LEDs on the battery charger.
- The charging time depends on the battery charge status. The time it takes to charge an almost fully depleted battery depends both on the battery capacity and the charge current. The approximate duration can be calculated as follows:
  Charging time = capacity of battery / charge current of battery charger.
- The lithium-ion battery can also be used when not fully charged. In this case, the remaining operating time is reduced.
- Charging continues automatically after a mains failure. Charging can be interrupted by pulling out the mains connector and continued as a partial charge.

The battery temperature rises by approx. 13°C during charging. Battery charging should only start when the battery temperature is below 40°C. The battery temperature before charging should be at least 5°C as otherwise it will affect the charge.

Meaning of the LEDs on the battery charger

When the battery charger is connected to the battery and to the power supply, the LEDs on the charger indicate the following:

Table 7: LEDs

LED lit	Meaning
Green	The battery is fully charged
Red	Battery is charging

If the green LED does not light up or if the red LED lights up permanently or not at all, this indicates a fault.

Charging the battery

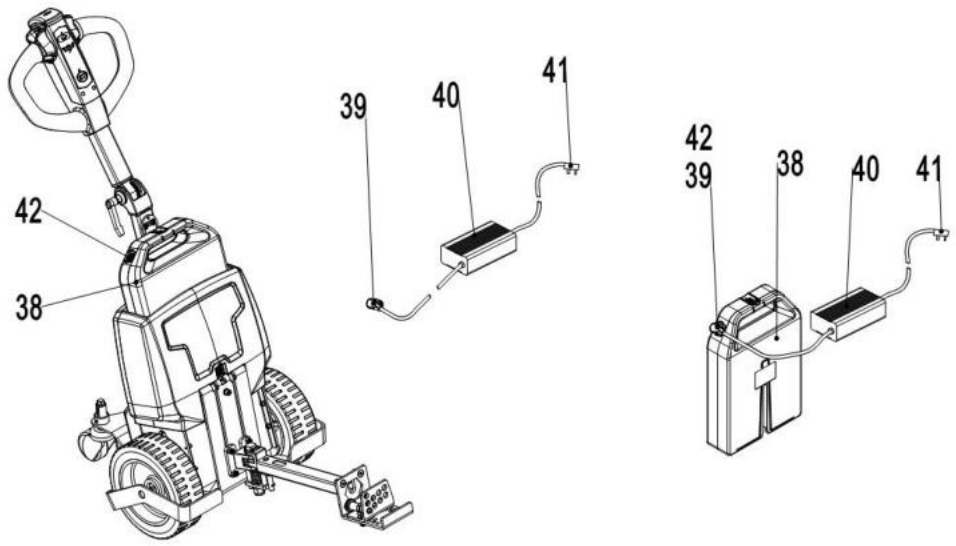

Fig. 14: Charging the battery

Requirements

– The truck is parked securely.

– The battery charger is approved for the battery type.

Tools and Material Required

– Battery charger

Procedure

- Expose the charging socket (42) of the battery and start by connecting it to the charge connector (39) of the battery charger (40).
- Then connect the mains plug (41) of the battery charger (40) to the power supply.
- ➢ The charging process is indicated by the illumination of the red LED.
- Check the charge status; also refer to the instructions on the battery charger (40).
- ➢ The charging process is completed when the green LED lights up.
- Once the battery (38) is charged, disconnect the battery charger (40) from the power supply before unplugging it from the battery.
- Close the charging socket (42) with the cap.

Battery is charged.

- ➢ Alternatively, the battery can also be charged outside the truck. The process for charging the battery remains the same.

e. Battery removal and installation

Removing the battery

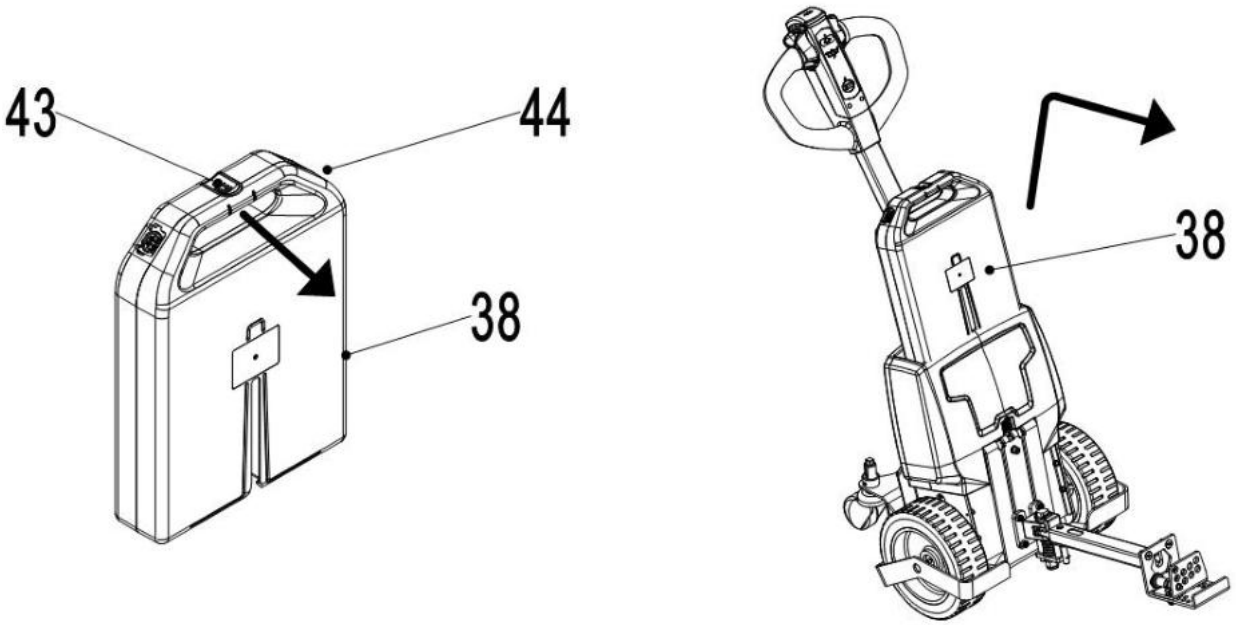

Fig. 15: Removing the battery

Removing the battery

Requirements

– The truck is parked securely.

– The emergency disconnect switch is actuated.

Procedure

- Unlock the battery latch (43).
- Lift the battery (38) up by the battery handle (44).

The battery has been removed.

Battery installation

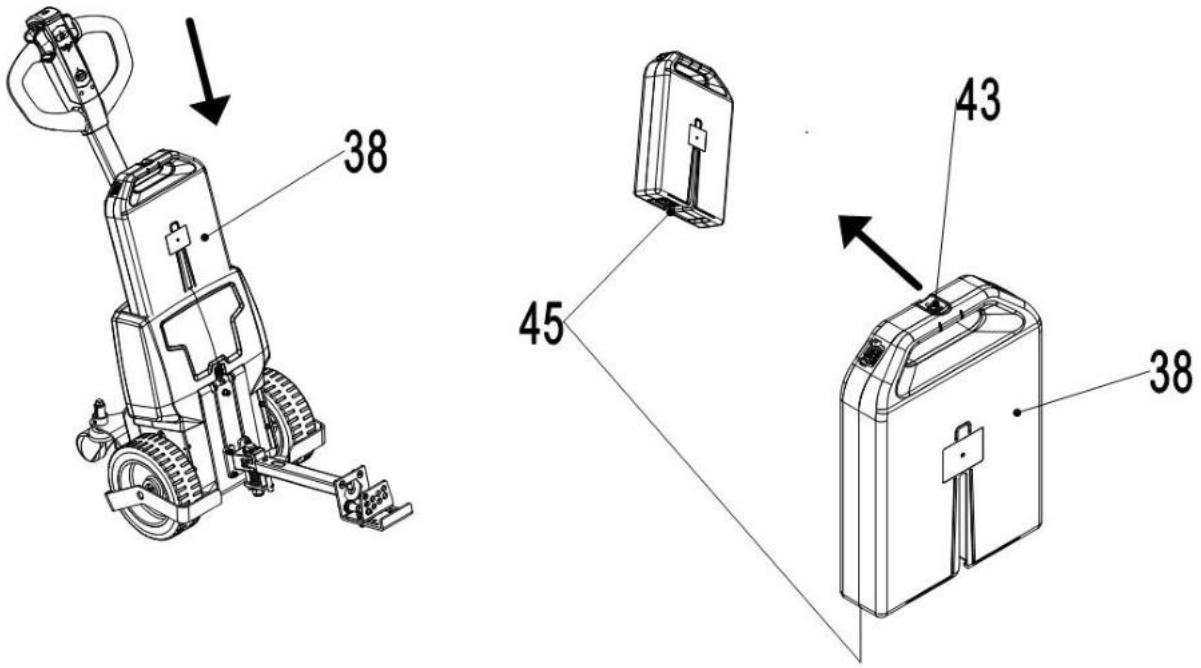

Fig. 16: Battery installation

Installing the battery

Requirements

– The truck is parked securely.

Procedure

- Insert the battery (38) into the battery compartment.
- ➢ The plug connection (45) between the battery and truck must be fully connected.
- Lock the battery latch (43).
- Release the emergency disconnect switch.

The battery is now installed.

9. REGULAR MAINTENANCE

- Truck maintenance must only be carried out by qualified and trained personnel.
- To lift the truck, follow chapter 4 by using designated lashing straps or jacking equipment. Before that, put safety devices (for instance, designated lift jacks, wedges or wooden blocks) under the truck to protect against accidental lowering, movement or slipping.
- Only use the original spare parts approved and released from your dealer.

If you need to replace the wheel, follow the instructions above. Casters must be round and must not have excessive abrasion.
Check out the priority items in the maintenance checklist.

a. Maintenance checklist

Table 8: Maintenance checklist

		Interval (Month)			
		1	3	6	12
Mechanical system					
1	Check the chassis for deformation and cracks		●		
2	Check if all screws are fixed		●		
3	Check the gearbox for abnormal sound and noise		●		
4	Check the wheels for deformation and damages		●		
5	Check the pivot points, and lubricate if necessary		●		
Electrical system					
6	Check the electric wiring for damage		●		
7	Check the electric connections and terminals		●		
8	Test the emergency disconnect switch and check for damage		●		
9	Check the electric drive unit for noise and damages		●		
10	Check the functionality of display unit		●		
11	Check if correct fuses are used		●		
12	Check if the warning signal works normally		●		
13	Carry out a frame leakage test (insulation test)		●		
14	Check drive control device for function and wear		●		
15	Test the electrical system of the drive motor		●		
Brake					
16	Test the brake, replace the brake disc if necessary		●		
Battery					
17	Check the battery case for damages and shape deviations		●		
18	Check the terminals for corrosion and damages		●		
19	Check the battery guiding system and discharge plug for damages		●		
Charger					
20	Check the main power cable for damages			●	
21	Check the start-up protection during charging			●	

Function					
22	Check the functionality of the horn/ audible warning signal	●			
23	Check the air gap of the electromagnetic brake	●			
24	Test the emergency braking	●			
25	Test the reverse and regenerative braking	●			
26	Test the collision safety switch (belly button)	●			
General					
27	Check labels for legibility, completeness and plausibility	●			
28	Inspect the castors and adjust the height, replace the castors if worn		●		
29	Carry out a test run	●			

b. Lubricating points

Lubricate the marked points in accordance with the instructions of the maintenance checklist. The specification of the required grease is DIN 51825 standard grease.

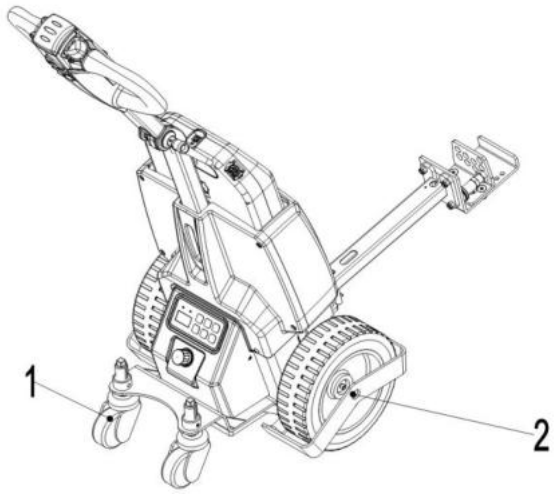

1. Castor
2. Drive wheel

Fig. 17: Lubricating points

c. Checking electrical fuses

Remove the main cover. The locations of fuses are marked in Fig. 14.

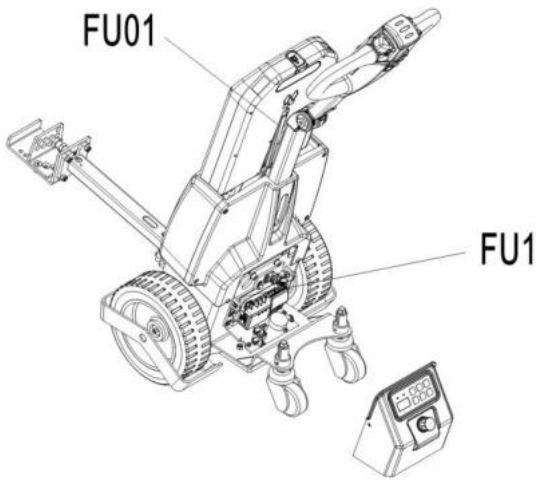

Fig. 18: Locations of fuses

Table 9: Fuse rating

Fuse	Rating
FU 1	10A
FU 01	70A

10. TROUBLE SHOOTING

- If the truck has malfunctions, follow the instructions mentioned in chapter 6.

Table 10: Trouble shooting

TROUBLE	CAUSE	REMEDY
Truck does not start	Battery is still connected to the battery charger.	Fully charge the battery and disconnect the charger form the battery.
	Battery is not connected correctly.	Check that the battery is correctly attached and locked in place and adjust if necessary.
	Fuses faulty	Check the fuses and replace if necessary.
	Battery charge status is too low	Charge the battery
	Emergency disconnect switch is activated	Release the emergency disconnect switch

If the truck has malfunctions and can't be operated out of the working zone, jack the truck up and place a load handler under the truck to secure the truck. Then move the truck to designated area.

11. WIRING/ CIRCUIT DIAGRAM

Electrical diagram

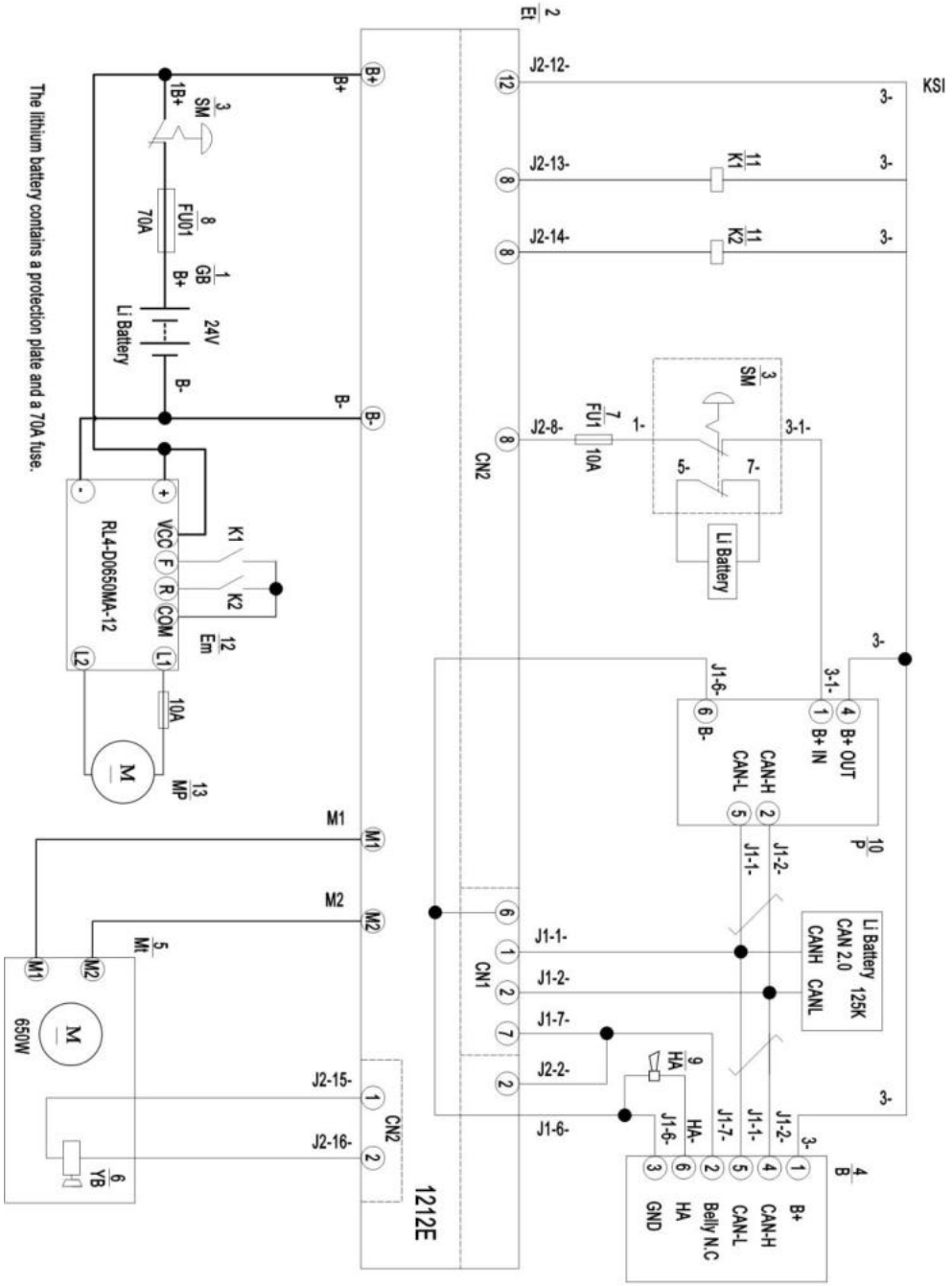

Fig. 19: Electric diagram

Table 11: Description of electrical diagram

Code	Item	Code	Item	Code	Item
GB	Battery	Mt	Drive motor	P	Display
Et	Controller	YB	Electromagnetic brake	K1, K2	Relay
SM	Emergency disconnect switch	FU1	10A fuse	Em	Linear actuator module
		FU01	70A fuse	MP	Linear actuator motor
B	Tiller	HA	Buzzer		

12. DECLARATION OF CONFORMITY (valid, if sold within EU)

[GB] CE Declaration of Conformity

The signatory hereby declares that the specified machine conforms to the EU Directive 2006/42/EC (Machine Directive) and 2014/30/EU (Electro-Magnetic Compatibility, EMC) including their amendments as translated into national legislation of the member countries. The signatory is individually authorized to compile the technical documents.

[D] EG-KONFORMITÄTSERKLÄRUNG

Der Unterzeichner bescheinigt hiermit, dass die im Einzelnen bezeichnete Maschine den Europäischen Richtlinien 2006/42/EG (Maschinenrichtlinie) und 2014/30/EU (Elektromagnetische Verträglichkeit - EMV) einschließlich deren Änderungen sowie dem entsprechenden Rechtserlaß zur Umsetzung der Richtlinien in nationales Recht entspricht. Der Unterzeichner ist bevollmächtigt, die technischen Unterlagen zusammenzustellen.

[E] DECLARACIóN DE CONFORMIDAD CE

El signatario certifico por medio de la presente que la máquina especificada cumple con las Normas Europeas 2006/42/CE (Normativa para maquinarias) y 2014/30/EU (Compatibilidad electromagnética), incluyendo sus respectivas odificaciones, así como con el decreto-ley para la adaptación de las normas al derecho nacional. El signatario dispone de una autorización individual que le permitecompilar la documentacióntécnica.

[F] DECLARATION DE CONFORMITE CE

Par la présente déclaration, les soussignés certifient que le machines spécifié ci-dessus est conforme à la loi et aux directives européennes 2006/42/CE (directive sur les machines) et 2014/30/EU (compatibilité électromagnétique - CEM), y compris aux modifications qui y sont apportées et à l'arrêté autorisant sa transposition en droit national. Chaquesignataireesthabilité à établirindividuellement la documentation technique.

[NL] EG-CONFORMITEITSVERKLARING

Ondergetekenden verklaren hierbij dat - volgens de nationale wetgeving van de Lidstaten - de hierboven vermelde opgegeven machina beantwoordt aan de bepalingen qua veiligheid bij machines (EG richtlijn 2006/42/EC) en electro-magnetische compatibilteit (EG richtlijn 2014/30/EU). Ondergetekenden zijn ieder individueel gemachtigd het technisch dossier samen te stellen.

[P] DECLARAÇÃO DE CONFORMIDADE CE

Pela presente, os signatários certificam que o máquina especificado está conforme às Directivas Europeias 2006/42/CE („Máquinas") e 2014/30/EU („Inocuidade Electromagnética - IEM"), incluindo as alterações das mesmas e o respectivo decreto-lei para a transposição em lei nacional. Cada um dos signatáriosestáautorizado a proceder à elaboração da documentaçãotécnica.

[I] DICHIARAZIONE DI CONFORMITÀ CE

I sottoscrittidichiaranocheilveicolo per trasportiinterniamacchinaspecificatosoddisfa le DirettiveEuropee 2006/42/EC (DirettivaMacchine) e 2014/30/EU (Compatibilitàelettromagnetica - EMV) comprese le relative modifiche, come pure ilrispettivodecretolegislativo per la conversionedelledirettive in dirittonazionale. I sottoscrittisonosingolarmenteautorizzatiallacreazionedelladocumentazionetecnica.

[BG] ЕВРОПЕЙСКА ОБЩНОСТ - ДЕКЛАРАЦИЯ ЗА СЪОТВЕТСТВИЕ

Подписаните удостоверяват с настоящето, че подробнооописанотомашина средствоотговаря на европейския норматив 2006/42/EG (норматив за машини) и на2014/30/EU (електро-магнетична съвместимост), включително с техните промени, както и на съответния указ за прилагане на нормативите в националното право. Подписаните при това са упълномощении поотделно да съставят техническата документация.

[CZ] EG - PROHLÁŠENÍ OSHODĚ

Nížepodepsaný tímtopotvrzuje, žepodrobný popisuvedené strojeodpovídáEvropskýmsměrnicím 2006/42/EC (směrniceprostroje) a 2014/30/EU (elektromagnetická interference - EMV) včetně jejichpozdějších úprav, jakož ipříslušnýmprávnímvýnosůmprouplatnění příslušné směrnicevrámcinárodníhopráva. Každý zpodepsanýchjsoujednotlivě zplnomocněnikvytvoření technickýchpodkladů.

[DK] EF-OVERENSSTEMMELSESERKLÆRING

Undertegnede attesterer hermed, at det specificerede maskine stemmer overens med de Europæiske Direktiver 2006/42/EU (maskindirektiv) og 2014/30/EU (elektromagnetisk kompatibilitet - EMC) samt med den modsvarende lovvedtagelse til implementering af direktiver i den nationale lovgivning. De undertegnede er hver for sig beføjet til at sammenstille de tekniske dokumenter.

[EST] EL vastavusavaldus

Allakirjutanud tõendavad käesolevaga, et üksikasjaliseltkirjeldatudtäpsustatud masin vastab Euroopa direktiividele 2006/42/EÜ (Direktiiv masinate kohta)

ja 2014/30/EU (Elektromagnetiline sobivus - EMS) kaasa arvatud nende muudatused ja nendele vastavatele õigusmäärustele direktiivide muutmiseks siseriiklikuks õiguseks. Iga allakirjutanu üksikult on volitatud koostama tehnilist dokumentatsiooni.

[FIN] EU-YHDENMUKAISUUSSELOSTUS

Allekirjoittaneet todistavat täten, että kukin erikseen mainittu omalla voimanlähteellä varustettutehdaskone vastaa EU-direktiivien 2006/42/EC (koneenrakennusdirektiivi) ja 2014/30/EU (sähkömagneettinen yhteensopivuus – EMC) määräyksiä sekä niiden muutoksia ja niiden kansalliseen lainsäädäntöön soveltamista koskevaa oikeussääntöä. Jokaisella allekirjoittaneista on oikeus itsenäisesti laatia asiaankuuluvia teknisiä asiakirjoja.

[GR] ΔΗΛΩΣΗΣΥΜΜΟΡΦΩΣΗΣΕΟΚ

ΟιυπογράφοντεςβεβαιώνουνδιάτηςπαρούσηςότιτοσυγκεκριμένομηχάνημασυμμορφώνεταιπροςτηνΚοινοτικήΟδηγία 2006/42/ΕΚ («Μηχανήματα») και 2014/30/EU (ΗλεκτρομαγνητικήςΣυμβατότητας, ΗΜΣ), καθώςκαιοιτροποποιήσειςτους, όπωςμεταφράστηκεστηνεθνικήνομοθεσίατωνχωρώνμελών. Οιυπογράφοντεςείναισεκάθεπερίπτωσηεξουσιοδοτημένοιατομικάνακαταρτίσουντατεχνικάέγγραφα.

[H] EU KONFORMITÁSI NYILATKOZAT

Alulírottak ezennel igazolják, hogy a részletesen leírt a megadott gép megfelel a 2006/42/EC (Gép-Irányelv) és a 2014/30/EU (Elektromágneses összeférhetőség - EMV) Európai Irányelveknek, beleértve azok módosításait, valamint az irányelvek nemzeti jogba történő átültetésére irányuló megfelelő jogi rendelkezést. Továbbá az alulírottak mindegyike rendelkezik meghatalmazással arra nézve, hogy összeállíthatja a műszaki dokumentációt.

[LT] ES atitikimo deklaracija

Žemiau pasirašę asmenys patvirtina,kad atskirai aprašytasnurodyta mašina atitinka Europos Sąjungos direktyvas 2006/42/EB (Mašinų direktyva) ir 2014/30/EU (Elektromagnetinis suderinamumas – EMS) įskaitant jų pakeitimus, o taip pat ir atitinkamą teisės aktą dėl direktyvų įgyvendinimo nacionalinėje teisėje. Kiekvienas iš pasirašiusių asmenų turi teisę ruošti techninę dokumentaciją.

[LV] ES atbilstības deklarācija

Ar zemāk redzamajiem parakstiem tiek apliecināts, kanorādīts mašīna atbilstEiropas Savienības normatīvām 2006/42/EG (Mašīnu normatīvas) un 2014/30/EU (Elektromagnētiskā atbilstība – EMV), ieskaitot to izmaiņas, kā arī atbilstošos tiesiskos rīkojumus normatīvu pielāgošanai nacionālajai likumdošanai. Parakstu īpašnieki ir atsevišķi pilnvaroti sastādīt tehniskās dokumentācijas.

[N] EU-KONFORMITETSERKLÆRING

Undertegnede bekrefter hermed at de enkelte betegnede maskin med kraftdrift tilsvarer de europeiske retningslinjene 2006/42/EC (maskinretningslinje) og 2014/30/EU (elektromagnetisk fordraglighet - EMV) inklusiv disses endringer og den tilsvarende rettsforordning til omsetning av nasjonal rett. Hver undertegnede er fullmektig til å sette sammen de tekniske dokumentene.

[PL] DEKLARACJA ZGODNOŚCI WE

Niżej podpisani deklarują, że poniżej opisana maszyna spełnia wymagania określone w dyrektywach Europejskich 2006/42/EC (Dyrektywa Maszynowa) i 2014/30/EU (Kompatybilności elektromagnetycznej - EMC) wraz z ich późniejszymi zmianami oraz odpowiednimi rozporządzeniami mającymi na celu przeniesienie tych dyrektyw do prawa krajów członkowskich. Sygnatariusz jest indywidualnieupoważniony do zestawianiadokumentacjitechnicznej.

[RO] DECLARAŢIE DE CONFORMITATE CE

Subsemnaţiiadeverescprinprezentacăvehiculul despecificatmaşinădescris individual corespundedirectiveloreuropene 2006/42/CE (Directivaprivindmaşinile) şi 2014/30/EU (Compatibilitateaelectromagnetică - CEM) inclusivmodificărilorlor precum şiactuluilegislativcorespunzătorprentrutranspunereadirectivelorîndreptnaţional. Subsemnaţii sunt fiecareînparteîmputerniciţisăîntocmeascădocumentaţiatehnică.

[RUS] Декларация соответствия стандартам ЕС

Настоящим лица, подписавшие документ, удостоверяют, что машина с указанной спецификацией соответствует европейским стандартам 2006/42/EG (Транспортная директива) и 2014/30/EU (Электромагнитная совместимость - EMC), включая изменения в них, а также соответствующим национальным стандартам и нормам. Каждое по отдельности лицо, подписавшее документ, имеет полномочия для составления технической документации.

[S] EG-KONFORMITETSFÖRKLARING

Undertecknarna intygar härmed att det i detalj betecknade maskin uppfyller de Europeiska direktiven 2006/42/EG (Maskindirektiv) och 2014/30/EU (Elektromagnetisk tålighet - EMV), inklusive ändringarna i detta och den motsvarande rättsförordningen för att omsätta direktiven i nationell rätt. Undertecknarna har var för sig fullmakt att sammanställa den tekniska dokumentationen.

[SK] vyhlásenie o zhode

Dolu podpísaní týmto potvrdzujeme, že podrobný popis uvedené stroje Zodpovedá Európskym smerniciam 2006/42/EC (ernica pre stroje) a 2014/30/EU (elektromagnetická tolerancia – EMV) vrátane jeho neskorších úprav, rovnako zodpovedá aj príslušným právnym nariadeniam na uplatnenie smerníc v rámci národného práva. Každý z podpísaných je jednotlivo splnomocnený na vytvorenie technických podkladov.

[SLO] EU IZJAVA O SKLADNOSTI

Podpisani s tem potrjujemo, da posamično označeno določeno stroj vozilo odgovarja Evropski direktivi 2006/42/EC (Direktiva o strojih) in 2014/30/EU (Elektromagnetna skladnost - EMV) vključno z njihovimi spremembami ter ustrezno pravno uredbo o prevzemu smernic v nacionalno pravo. Podpisniki so vsakokrat posamezno pooblaščeni za izdajanje tehnične dokumentacije.

[TR] AB Uygunluk Açıklaması

İmza sahibi şahıslar, ayrıntıları belirtilen makine aracının, 2006/42/EC (Makine Yönergesi) ve 2014/30/EU (Elektromanyetik Uyumluluk – EMC) no'lu Avrupa Yönergelerine ve bunların değişiklik sonucu oluşan metinlerine ve yönergelerin milli hukuk hükümlerine dönüştürülmesine dair ilgili hukuk kararnamesine uygun olduğunu tasdik ederler. İmza sahibi şahıslar teknik dosyaları bir araya getirmek için münferiden vekil tayin edildi.

(1) Type/ Typ/ Tipo/ Modello/ Tyyppi/ Tipo / ΤΥΠΟΣ/ Típus/ Tip/ Тип/ Tips/ Tipas/ Tüüp:

(2) Serial No./ Serien-Nr./ N°. de série/ Serienummer/ Nº de serie/ Numero di serie/ Serienr./ Sarjanro/ αυξάνωναριθμός/ Seriové číslo/ Szériaszám/ Nr.Seryjny/ Serijska številka/ Výrobné číslo/ Серийныйномер/ Seri No./ Seerianr./ Sērijas Nr./ Serijos numeris:

(3) Year of constr./ Baujahr/ Année de constr./ Bouwjaar/ Año de constr./ Anno di costruzione/ Produktionsår/ Byggeår/ Tillverkningsår/ Valmistusvuosi / Ano de fabrico / έτοςκατασκευής/ Rokvýroby/ Gyártásév/ Rokprodukcji / Letnik / Годизготовления / Üretimyılı / Väljalaskeaasta / Izgatavošanas gads / Gamybosmetai

(4) Manufacturer or his authorized representative in Community/ Herstelleroder in der Gemeinschaft ansässigerVertreter/ Fabricant ou son mandataireétabli dans la Communauté/ Fabrikant of zijn in de Gemeenschapgevestigdegemachtigde/ Fabricante o representanteestablecidoen la Comunidad/ ConstrutorouRepresentanteestabelecidonaComunidade/ Costruttoreoppureilsuorappresentantenella Comunità/ Fabrikant ellerdennesiFællesskabetetableredebefuldmægtigede/ Produsenteller agent innenfelleskapet/ Tillverkareeller representant inom EU/ Valmistaja tai yhteisömaassaolevaedustaja / V˘robcenebojehozastoupení/ Gyártó / producent albojegoprzedstawiciel w EG (WspólnotaEuropejska)/ Καηαζθεπαζηήο ή όκηινοηνπηθώλ αληηπξνζώπσλ/ Üreticiya da BölgedekiYetkiliTemsilci/ Proizvajalecalipooblaščenizastopnik s sedežem v EU/ Výrobcaalebozástupca so stálymbydliskom v EÚ / Изготовительилиегопредставитель, зарегистрированный в стране Содружества/ Tootjavõiorganisatsioonispaiknevesindaja/ Ražotājsvaivietējaisuzņēmumapārstāvis / Gamintojasarbašalyjereziduojantisatstovas:

(5) Date/ Datum/ Data/ Fecha/ datum/ Dato/ päiväys/ Kuupäev/ Datums/дата/ Dátum/ dátum/ tarih/ ημερομηνία

(6) Authorised signatory/ ImAuftrag/ pour ordre/ Incaricato/ Por orden de/ por procuração/ op last van/ påvegneaf/ påuppdrag/ Etteroppdrag/ psta./ Ülesandel / pavedus / v.i. / Попоручению / megbízásából /длъжностнолице / z pověření / z poverenia / po nalogu / napolecenie / din sarcina / adına / θαη' ελληνή

(1) Type: **XX XX–Self-propelled industrial truck**

(2) Serial No: **XXXXXXXX**

(3) Year of constr.: **YYYY**

(4) Manufacturer or his authorized representative in Community:

Company name/ Street / Postal code Town/ Country

(5) Date: **YYYY.MM.DD**

(6) Authorized signatory: **Mr. Sample**

Sample
If you can read this text, your declaration is not complete. In this case please ask for a copy