NOBLELIFT

Hotline: 4008-836115

INSTRUCTION MANUAL

Electric Tow Tractor

T50N/T30N

WARNING

Do not operate the tow tractor before reading and understanding the operating instructions.

NOTE:

- **Please check product type and parameters of your truck in this manual as well as on the ID-plate.**
- **Keep this instruction manual for future reference.**

Version 02/2023

T30N/T50N-SMS-002-EN

FOREWORD

Before operating the tractor, please read this instruction manual carefully and understand the usage of the tractor completely. All instructions in this manual should be seriously followed, otherwise warranty will be invalid by default, and our company shall not be liable for any losses arising therefrom.

If the customer or a third party modifies the truck without manufacturer's permission, the warranty will be invalid by default, and our company shall not be liable for any loss arising therefrom.

This handbook describes the usage of different stand-on tow tractors. When operating and servicing the tractor, make sure that it applies to your truck type.

Our products are subject to ongoing developments, so the company reserves the right to modify the appearance, configuration and function of the products, therefore please have understanding, that any claims on performance shall not be derived from this manual.

NOTE: In this manual, the symbol on the left indicates warning and danger, which may lead to death or serious injury if not followed.

Copyright

The copyright remains with the company, mentioned on the CE- certificate at the end of this document or, if sold within the USA, with the company, mentioned on the company sticker.

TABLE OF CONTENTS

NOTE: In this manual, the symbol on the left indicates warning and danger, which may lead to death or serious injury if not followed. 1
1. CORRECT APPLICATION 3
2. DESCRIPTION OF THE TOW TRACTOR 4
   a. Definition of directions 4
   b. Overview of the main parts 5
   c. Main technical data 6
   d. Description of the safety devices and warning stickers 8
3. WARNINGS, RESIDUAL RISK AND SAFETY INSTRUCTIONS 9
4. COMMISSIONING, TRANSPORTING, DECOMMISSIONING 9
   a. Commissioning 9
   b. Transportation 9
   c. Decommissioning 10
5. DAILY INSPECTION 10
6. OPERATING INSTRUCTIONS 10
   a. Pin-code lock Settings 10
   b. Starting 11
   c. Driving 11
   d. Steering 12
   e. Braking 12
   f. Parking 12
   g. Malfunctions 12
   h. Emergency 13
7. BATTERY MAINTENANCE, CHARGING AND REPLACEMENT 13
   a. Maintenance 13
   b. Charging 14
   c. Replacement 14
   d. Battery indicator 14
8. REGULAR MAINTENANCE 15
   a. Maintenance checklist 15
   b. Lubricating points 16
   c. Checking electrical components and fuses 16
9. TROUBLE SHOOTING 18
10. WIRING/ CIRCUIT DIAGRAM 19
   a. T50N circuit diagram 19
   b. T30N circuit diagram 20

1. CORRECT APPLICATION

It is only allowed to use the tractor following the instructions of this manual. Improper usage will cause human injuries or damage to the equipment. Meanwhile, the operator/ the operating company has to ensure the correct usage and has to ensure, that this tractor is used only by staff, which is trained and authorized to use this tractor.
The operator must pay attention to the information on the warning stickers, safety instructions and ID plate on the truck to ensure the proper usage.

The tractor has to be used on substantially firm, smooth, prepared, level and adequate surfaces.
The tractor should be operated with ambient temperatures between -5℃ to + 40℃.
The tractor is intended to be used indoors with 50Lux operating lighting at least.
Operating sideways or diagonally on ramps is not allowed.
Lifting or transporting people is not allowed.
The tractor is not allowed to be used in an area with explosion hazard.
The tractor is not allowed to be used outdoors in bad weather.
The tractor is not allowed to be used in a dusty or corrosive environment, unless it equips with special protective assembly approved by manufacturer.

No modifications or changes to this tractor which may affect rated traction capacity, stability or safety requirements of the tractor shall be made without the prior written approval of the original tractor manufacturer, its authorized representative, or a successor thereof. This includes changes affecting, for example, braking, steering, truck weight and the increase/ decrease of removable accessories. When the manufacturer or its successor approve a modification or change, they shall also make and approve appropriate changes to ID plate, operation and maintenance manuals.
Obeying these instructions will make the warranty invalid.

2. DESCRIPTION OF THE TOW TRACTOR

a. Definition of directions

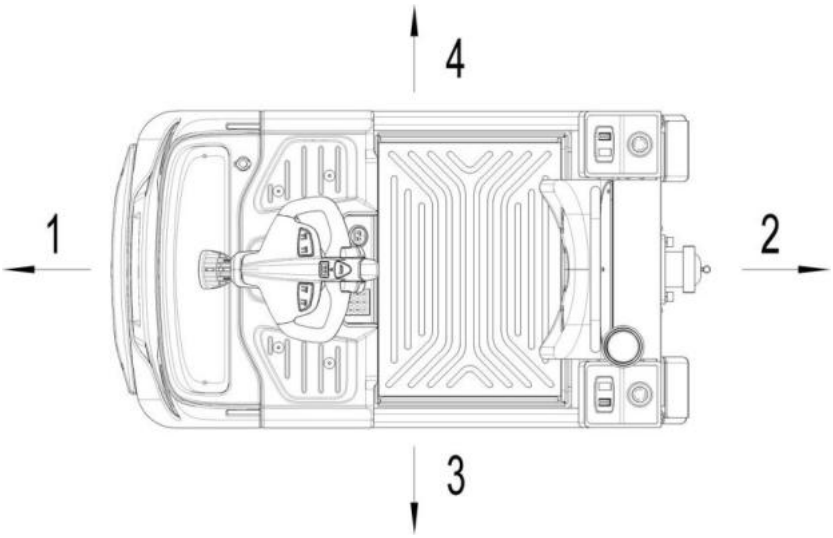

No.	Definition of directions	Note
1	Front	Driving side
2	Rear	Loading side
3	Left	
4	Right	

b. Overview of the main parts

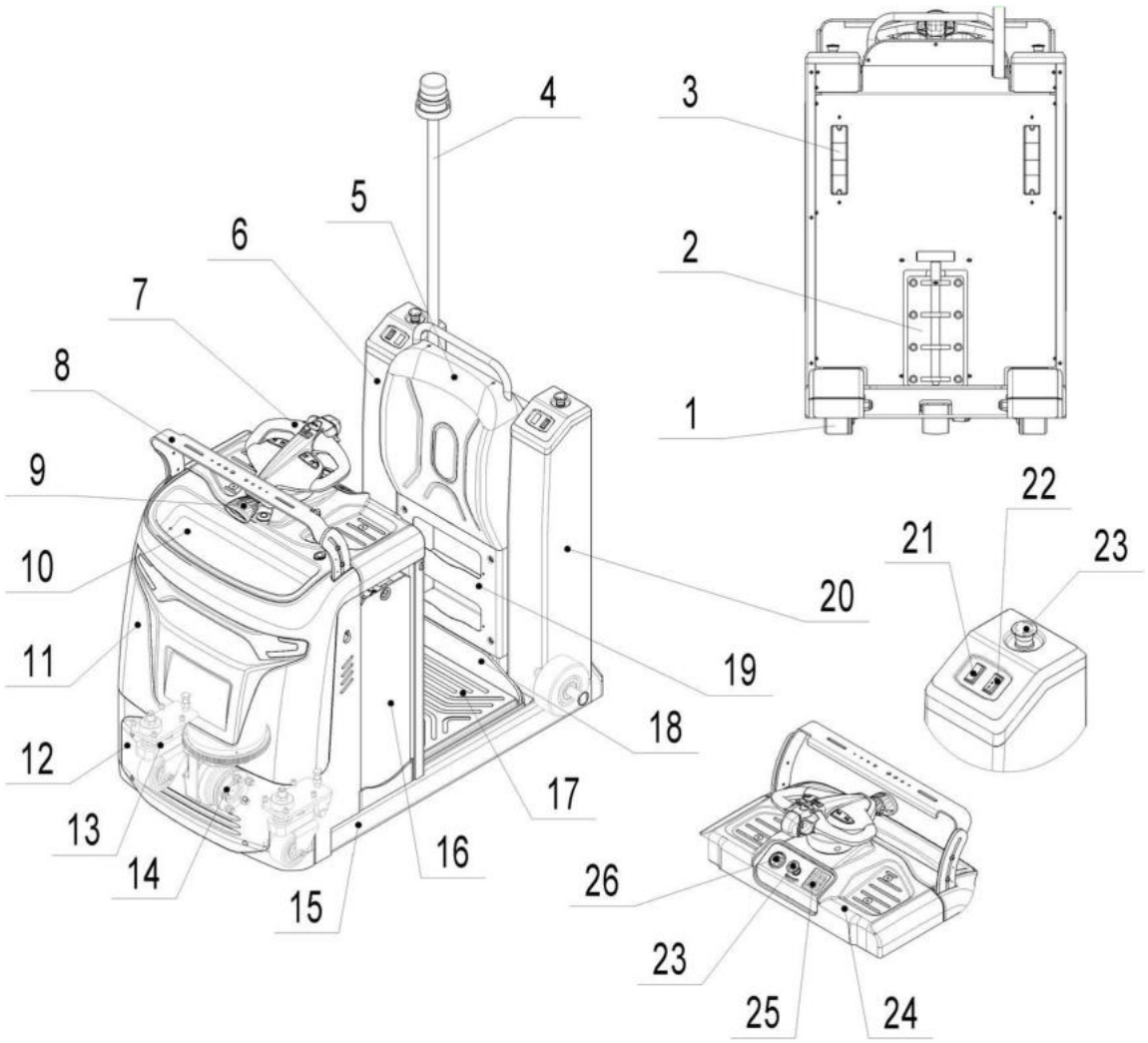

No.		Description	No.		Description
1	●	Load wheel	14	●	Drive wheel
2	●	Draw bar	15	●	Chassis
	○	Electric draw bar	16	●	Lead-acid battery
3	○	Three-colour tail-lamp		○	Lithium battery
4	●	Warning beacon (light)	17	●	Rubber mat
	○	Warning beacon (Acousto-optic)	18	●	Platform
5	●	Backrest	19	●	Storage compartment
6	●	Right protective cover		○	Fender
7	●	Tiller	20	●	Left cover
8	●	Accessory bar	21	●	Seal part
9	●	Blue-ray light	22	●	Sideways control (FW./ BW.)
10	●	Storage compartment	23	●	Emergency button
11	●	Front cover	24	●	Upper panel
12	●	Bumper	25	●	Pin-code lock
13	●	Side rollers(optional for T30N)	26	●	Indicator
●: Standard ○: Optional					

c. Main technical data

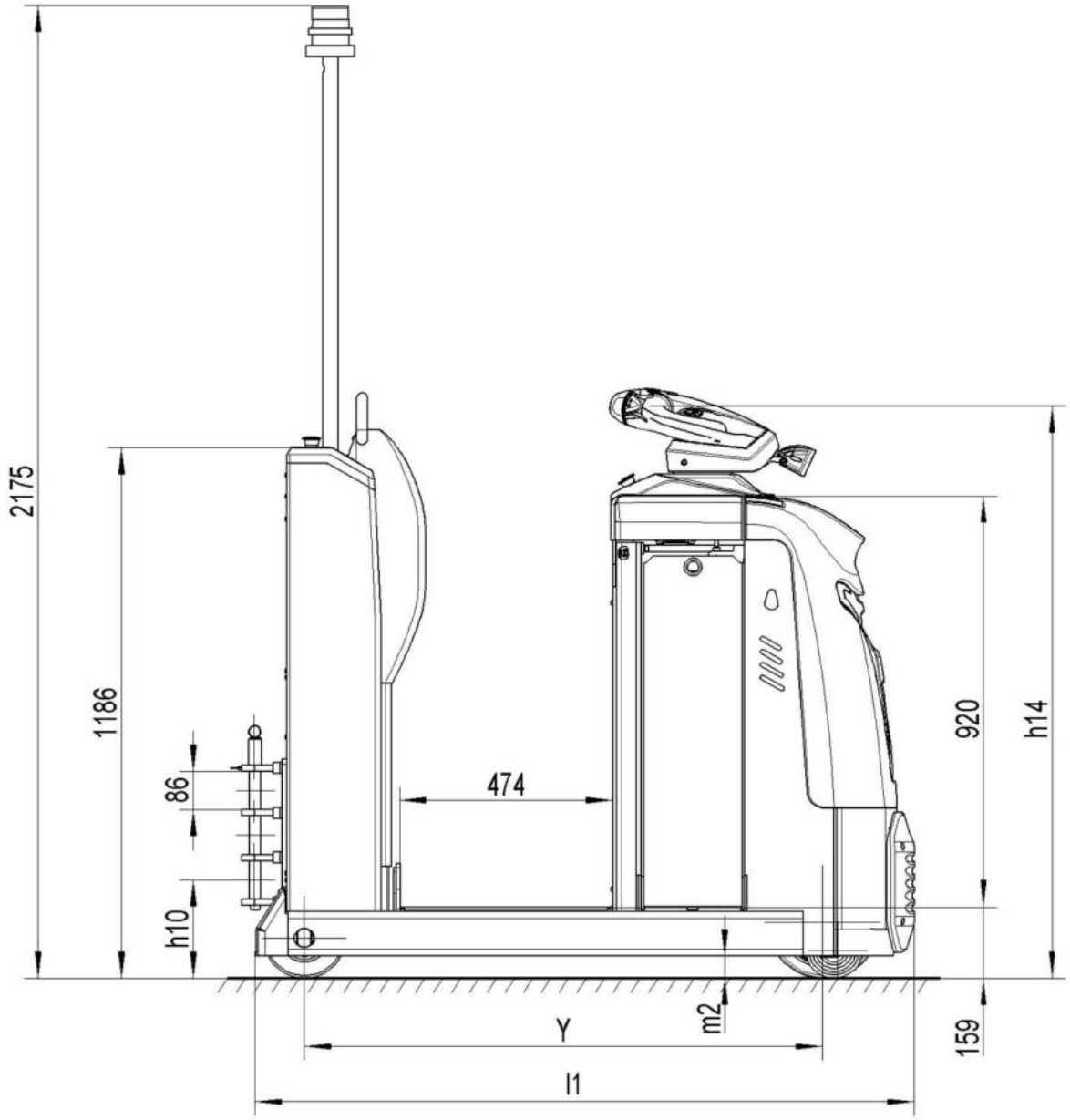

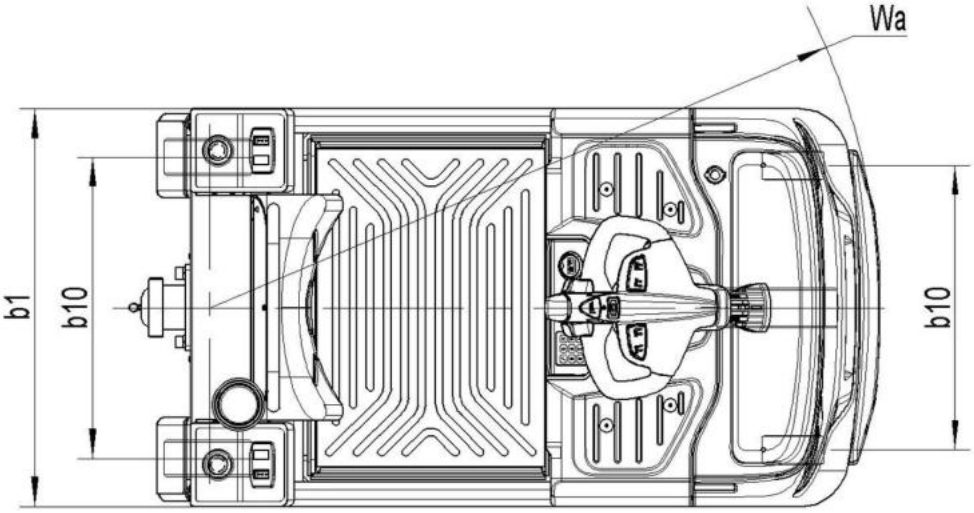

Type sheet for industrial tractor according to VDI 2198					
Identification	1.2	Model		T30N	T50N
	1.3	Drive		Electirc	Electirc
	1.4	Manual,pedestrian,stand-on,seated,order picker operation		Stand-on	Stand-on
	1.5	Load capacity/rated load	Q(t)	3.0	5.0
	1.7	Rated drawbar pull	F(N)	800	1000
	1.9	Wheelbase	Y(mm)	1155	1155
Wei-ghts	2.1	Net weight incl. battery	kg	950	1020
	2.3	Axle loading,unladen front/rear	kg	550/400	610/410
Wheels/ frame	3.1	Tyres		Gummi/PU	Gummi/PU
	3.2	Tyre size,front	∅ x w (mm)	∅230×70	∅250×80
	3.3	Tyre size,rear	∅ x w (mm)	∅180×76	∅180×76
	3.4	Additional wheels(dimensions)	∅ x w (mm)		∅124×60
	3.5	Wheels,number front/rear(X=driven wheels)		1x+2/2	1x+2/2
	3.6	Tread width,front	b_{10} (mm)	580	580
	3.7	Tread width,rear	b_{11} (mm)	614	614
Basic dimensions	4.9	Height of tiller in drive position min./max.	h_{14} (mm)	1280	1280
	4.12	Coupling height	h10(mm)	230/330/430	230/330/430
	4.19	Overall length	l_1 (mm)	1429[1)]	1429[1)]
	4.21	Overall width	b_1 (mm)	810	810
	4.32	Groud clearance,center of wheelbase	m_2 (mm)	50	50
	4.35	Turning radius	Wa (mm)	1333[2)]	1333[2)]
Performance data	5.1	Travel speed,laden/unladen	km/h	6/9	7/12
	5.5	Drawbar pull,laden/unladen	N	800	1000
	5.6	Max. drawbar pull,laden/unladen	N	2000	3000
	5.10	Service brake		regenerative	regenerative
Electrisc	6.1	Drive motor,output S2 60 min.	kW	1.9	2.6
	6.3	Battery as per DIN 43531/35/36 A，B，C，no		no	no
	6.4	Battery voltage/nominal capacity	V/Ah	24/375	24/465
	6.5	Battery weight	kg	292	352
Misc.	8.1	Type of drive control		AC speedCONTROL	AC speedCONTROL
	8.4	Sound pressure level at operator’s ear as per EN12053	dB(A)	<70	<70

1) With bumper l1=1469mm; 2) With bumper Wa=1359mm;

d. Description of the safety devices and warning stickers

A Identification plate (ID plate)
B Sticker to read and follow these instructions
C Crane hook sticker

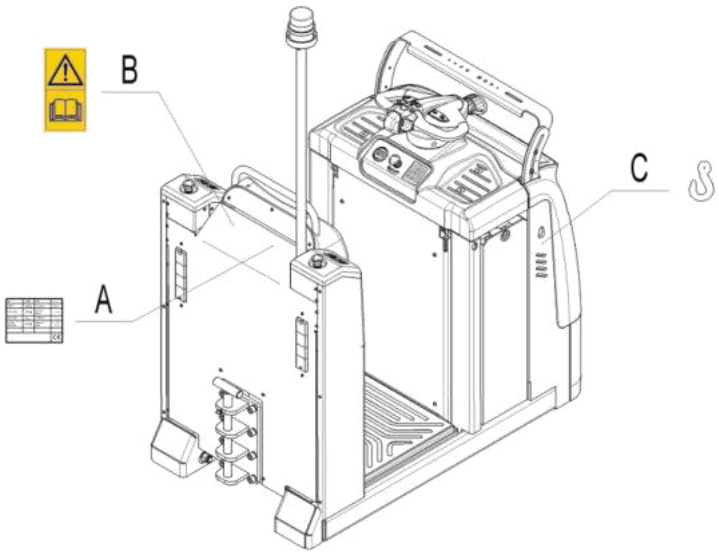

The tractor is equipped with three emergency buttons (23), pressing any one of the three buttons can turn off all the functions of the tractor.

The tiller of this tractor is equipped with a safety (belly) button (27), which switches the driving function away from the operator, if the tractor travels towards the operator and the tiller is activated in the tiller's operating position.

Follow also the instructions given on the stickers. Replace the stickers if they are damaged or missing.

Type	XXXX		
Serial Number	XXXX	Manufacture date	XXXX
Rated drawbar pull	XXX N	Max. drawbar pull	XXX N
System voltage	XX V	Rated power	XXX kW
Service weight (without battery)	XXX kg	Min./ Max. battery weight	XX/XX kg
Rated capacity	XXX kg		
XXXXXXXXX **XXXXXXXXXX**			CE

3. WARNINGS, RESIDUAL RISK AND SAFETY INSTRUCTIONS

DO NOT

- Place your feet or hands under the tractor.
- Allow other person than the operator to stand in front of or behind the tractor when it is moving.
- Overload the tractor.
- Lift people. People could fall down and suffer severe injury.
- Push or pull loads.
- Drive laterally or diagonally on ramps.
- Refit the tractor without manufacturer's written consent.
- Leave the tractor for a long time without turning off the power.
- Operate the tractor without safety shoes.

4. COMMISSIONING, TRANSPORTING, DECOMMISSIONING

a. Commissioning

Type	T30N	T50N
Commissioning weight [kg]	Around 990	Around 1050
Dimension [mm]	1500X840X1500	1500X840X1500

After receiving the new tractor or for re-commissioning, you have to do followings before (firstly) operating the tractor:

- Check if all parts are included and not damaged.
- Check if all functions of the tiller work normally.
- Check if proper batteries and chargers are used.
- Do the work according to the daily inspections as well as functional checks

b. Transportation

Use proper crane equipment or forklift to place the tractor on the vehicle or other equipment for transportation, and fix the tractor as required.

During transportation on a lorry or truck always fasten the tractor securely.
Fix the tractor with a wedge in case of accidental movement.
The lashing band used should be strong enough.
Fix the loading and unloading AIDS (pallets, wedges) with anti-slide materials.

Fasten the tractor with lashing band according to the picture on the right, find the proper location for the lashing band.

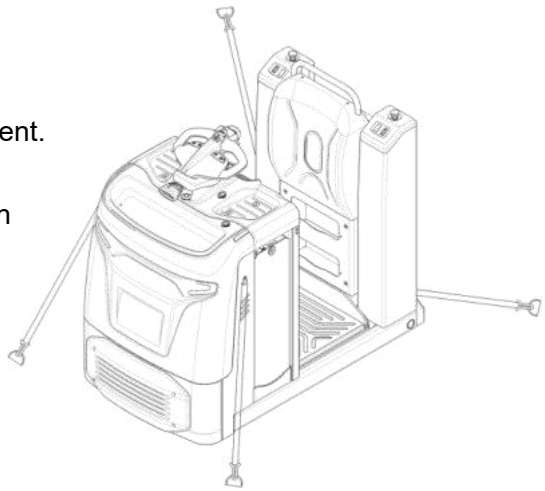

Or fasten the tractor via the man-up platform with lashing band.

c. Decommissioning

Remove the trailer before storing the tractor. Grease all greasing points mentioned in this manual (regular inspection), eventually protect the tractor against corrosion and dust. Remove the batteries and jack the tractor safely, so that there will be no flattening after storage.

For final decommissioning hand the tractor to a designated recycling company. Oil, batteries and electric components must be recycled due to legal regulations.

5. DAILY INSPECTION

This chapter describes pre-checks before operating the tractor.
Daily inspection is effective to find the malfunctions or faults on this tractor. Check the following items before operation.

DO NOT USE THE TRACTOR IF ANY MALFUNCTION IS FOUND.

- Check for scratches, deformation or cracks.
- Check the vertical creep of the tractor.
- Check the smooth movement of the wheels.
- Check the function of the emergency brake by activating the emergency button.
- Check the braking function of proximity switch of the tiller.
- Check if all bolts and nuts are tightened firmly
- Visual check if there are any broken electric wires.

6. OPERATING INSTRUCTIONS

ONLY PEOPLE TRAINED CAN OPERATE THE TRACTOR. BEFORE OPERATING THIS TRACTOR, PLEASE FOLLOW THE WARNINGS AND SAFETY INSTRUCTIONS (CHAPTER 3).
Operate the tractor with safety shoes.
Non-trained personnel are not allowed to operate and drive the tractor.
Lifting people is not allowed.
Stop operating immediately if any damages or defects are found, and report to the superior.
Modification or repair for the tractor without manufacturer's authorization is not allowed.

a. Pin-code lock Settings

The initial password of the pin-code lock is "1234", which should be changed after starting the tractor for the first time. The new password should not be the same as the administrator password. Please consult your local dealer or call the service hotline for the administrator password.

Pin-code lock supports additional ID cards, password entry, pass--word modification and password reset.

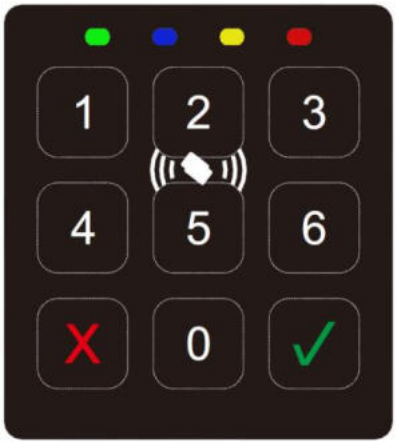

Register additional ID cards: in standby mode, correctly enter the administrator password, press "√" button, the yellow indicator will flash, and then enter "3", press "√" button, the yellow indicator will continue flashing to enter the mode of registering additional ID card. At this time, put the additional ID card close to the pin-code lock and take it away. Press "×" button, the yellow indicator will be off and exit the mode of registering additional ID card, or wait for 5 seconds after the card is successfully registered, then the system will exit the current mode automatically.

Password entry: in standby mode, correctly enter the administrator password, press "√" button, the yellow light will flash, and then press "1" and "√" button, the yellow indicator will continue flashing to enter the mode of password entry. At this time, enter a 4-digit-code in turn and press "√" button, the password entry is successfully done if the buzzer rings once. Pin-code lock can support up to 10 sets of passwords. After recording 10 sets of passwords, the newly entered passwords will be overwritten one by one from the first set, please save the passwords that have been set.

Password modification: in standby mode, correctly enter the administrator password and press "√" button, the yellow indicator starts flashing. Then press "2" button and "√" button, the yellow indicator continues flashing and entering the password modification mode. Enter the initial password and press "√" button, the buzzer will ring once. Then enter new password and press "√" button, after the one-time ring of the buzzer, the yellow indicator will be off and the password is successfully modified.

Password reset: in standby mode, correctly enter the administrator password and press "√" button, the yellow indicator starts flashing, and then press "0" button. The buzzer will ring once, which indicates that the passwords set by users are cleared and reset as initial password “1234”.

As shown in the figure above, the four indicators on the pin-code lock are green indicator (power), blue indicator (working), yellow indicator (waiting) and red indicator (error).

b. Starting

After completing daily inspection, turn on emergency stop switch (23) to make the tractor connected to the power and standby. Enter the correct password and press "√" button and the buzzer rings once, the green indicator is on and the tractor is successfully started. Or put ID card close to the pin-code lock, after the buzzer rings once, the green indicator is on and the tractor is successfully started. Before starting the tractor, check if there is safety hazard around the tractor, and then press the horn button (32) to send out the warning signal of the working tractor.

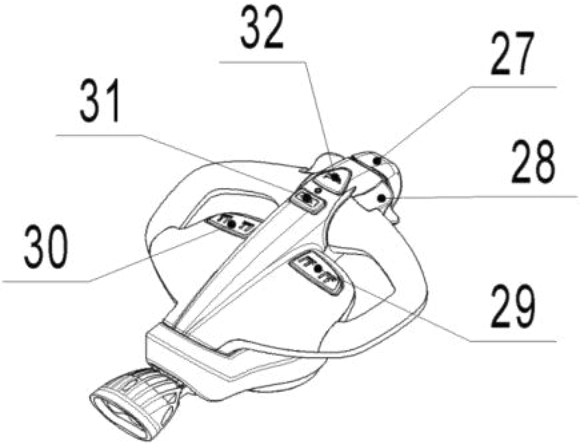

c. Driving

Do not overload.
Do not drive or park the tractor laden for a long time on ramps.

Slowly push the accelerator knob (28) to control the driving speed until reach the desired speed. If the accelerator knob is back to the neutral position, the controller slows the tractor until it stops. If the tractor stops, the parking brake starts working. Please carefully drive the tractor to your destination, watch the route conditions and adjust the driving speed via the accelerator knob operation.

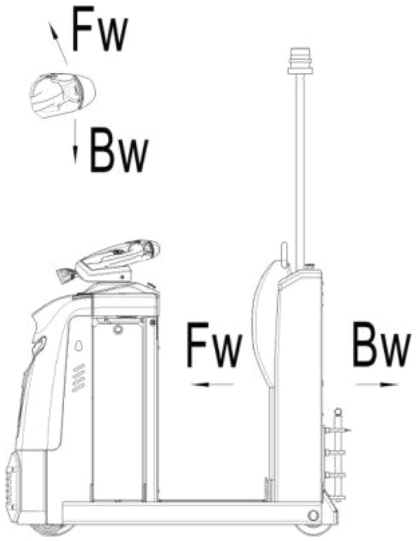

Press "turtle speed" button (31) to activate the turtle speed function. The indicator turns red and the maximum speed of the tractor decreases; When press turtle button (31) again, the turtle speed function is closed, the indicator turns green and the maximum speed of the tractor will be as the initial speed. Each time the tractor is restarted, the turtle speed function activated last time will be invalidated and needs to be reactivated for turtle speed. In addition, the turtle speed button can only be activated and closed when the accelerator knob (28) is released.

d. Steering

Steer the tractor by moving the tiller (7) to left/ right side. Left/ right rotation limit of the tiller is 60°, corresponds to the 90° left/ right rotation limit of the drive wheel.
If you steer the tiller when driving the tractor, the speed of the tractor will be gradually decreased with the increase of steering angle.

e. Braking

Braking performance depends on road conditions and the load conditions and speed of the tractor. The braking function can be activated by several ways below:

- Operate the accelerator knob (28) back to the neutral position or release the accelerator knob, the regenerative braking is activated. The tractor brakes until it stops.
- Operate the accelerator knob (28) from one driving direction directly to the opposite direction, the regenerative braking is activated and the tractor starts driving into the opposite direction.

f. Parking

Do not park the tractor when on ramps.
Operators are not allowed to leave the tractor for a long time without power supply
Park the tractor on firm and level ground.

Press emergency switch (23) if the operator is to leave the tractor for a long time.

g. Malfunctions

If there are any malfunctions or the tractor is inoperative, please stop using the tractor and press the

emergency button (23). If possible, park the tractor on a safe area.
Inform immediately the manager and, or call for after-sales service. If necessary, tow the truck out of the operating area by using specific towing/ crane equipment.

h. Emergency

If emergency switch (23) is pressed during driving operation, the tractor will be stopped with maximum braking power, so the loads may drop off from the tractor or trailer, so emergency switch (23) cannot be used as the brake during driving.
Emergency switch (23) can only be used under dangerous conditions during driving.
If emergency switch is damaged or out of reach, there will be risk of accidents.

7. BATTERY MAINTENANCE, CHARGING AND REPLACEMENT

- Only trained technicians are allowed to maintain, charge or replace the battery.
- Recycling of batteries undergoes national regulations. Please follow these regulations.
- Protect batteries away from open fire for battery disposal, otherwise it will cause explosion.
- Smoking and open fire is not allowed around the battery. Keep the inflammable materials or equipment that is easily catching sparkles 2m away from the charging place. And the charging place must be ventilated and equips with fire extinguishers.
- Before finishing the maintenance work, make sure, that all cables are connected correctly and that there are no disturbing towards other components of the tractor.

The weight of the battery has great influence on the safety, stability and load capacity of the tractor. Please consider the maximum operating temperature of the battery and check the battery manufacturer's manual for details.

If the tractor equips with lithium battery, please follow the lithium battery manual to maintain, charge and replace the battery.

a. Maintenance

Lead-acid battery terminals, cable terminals and battery caps must be fasten and clean, and properly grease these parts.

- For normal operation, add water once every 2 weeks; under high temperature or high intensity working conditions, add water once a week.
- Water should not exceed the maximum level.
- Better to add water in the last period of charging.
- Add deionized water (distilled water), do not add purified drinking water or acid liquid.
- Check details in the battery manual for other maintenance requirements.

b. Charging

- It is only allowed to use the supplied charger for charging the battery.
- The room where you are charging must be ventilated.
- Keep the inflammable materials or explosive articles 2m away from the charging place.

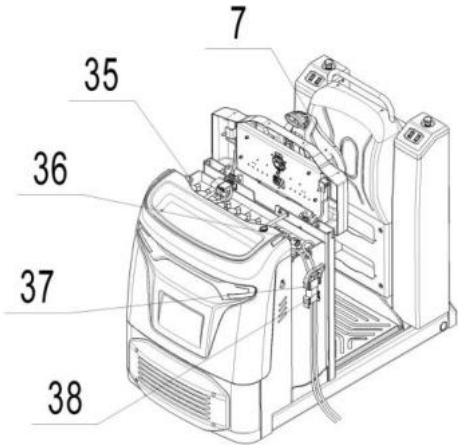

Park the tractor securely and switch off the tractor with pressing the emergency button (23).
Press lock catch (34) and lift the tiller (7) to open the console. Unplug the battery connector (37) and connect it to the charger for charging. Battery assembling is in the opposite order.

c. Replacement

Take out the battery and place it on the equipment for battery replacement safely, and ensures that the battery replacement device does not move during the battery replacement.
Incorrect use of the device may cause the battery being tipped over!
To remove the battery, press lock catch (34) and lift the tiller (7) to open the console. Flip the pad (35), loosen the battery lock lever (36) and turn it over, then remove the battery from the side of the tractor.
Battery assembling is in the opposite order.

d. Battery indicator

The left figure above shows the main interface of the indicator, which indicates the battery capacity, cumulative working hours and driving speed.
The right figure above shows the fault interface of the indicator, which indicates the fault code.

When the remaining battery power is 20%, it starts to flash.
When the remaining battery power is 10%, the driving speed is reduced.

When the remaining battery power is more than 70%, the indicator shows the same value of battery power as the value before charging if the battery is charged.
Only when the remaining battery power is less than 70%, the indicator shows the correct value of battery power if the battery is charged.

8. REGULAR MAINTENANCE

- Only trained personnel are allowed to do maintenance on this tractor.
- Before maintaining, turn off the power and remove the trailer from the tractor.
- If you need to lift the tractor, please use the specific binding equipment or lifting equipment mentioned in Chapter 4. Before lifting the tractor, please put the safety device (for instance designated jack, wedge, or wooden blocks) under the tractor to avoid accidental fall, movement or sliding.

- Use approved and from your dealer released original spare parts.

If you need to replace the wheel, please follow the instructions above. Casters must be round and free from abnormal wear.
Check the key items emphasized in the maintenance checklist.

a. Maintenance checklist

		Interval (Month)			
		1	3	6	12
Mechanical system					
1	Check the chassis for deformation and cracks		•		
2	Check if all screws are fixed		•		
3	Check the gearbox for noise and leakage		•		
4	Check the wheels for deformation and damages		•		
5	Check and lubricate the steering bearing				•
6	Check and lubricate the grease nipple	•			
Electrical system					
7	Check if the electric wiring is damaged		•		
8	Check the electric connections and terminals		•		
9	Test the emergency switch function		•		
10	Check the electric drive motor for noise and damages		•		
11	Test the display		•		
12	Check if correct fuses are used		•		
13	Test the warning signal		•		
14	Check the contactor (s)		•		
15	Check if the chassis is conductive (insulation test)		•		
16	Check functions and mechanical wear of the drive controller		•		
17	Check the electrical system of the drive motor		•		

Braking system					
18	Check brake performance, if it is necessary to replace the brake disc or adjust the air gap		•		
Battery					
19	Check the battery voltage		•		
20	Clean and grease the terminals and check for corrosion and damages		•		
21	Check the battery housing for damages		•		
22	Check if it is necessary to add distilled water	•			
Charger					
23	Check the main power cable for damages			•	
24	Check the fail-safe protection during charging			•	
Functions					
25	Check the horn function	•			
26	Check the air gap of the electromagnetic brake	•			
27	Test the emergency braking	•			
28	Test the reverse and regenerative braking	•			
29	Test the safety (belly) button function	•			
30	Check the steering function	•			
31	Check the function of proximity switch of the tiller	•			
General					
32	Check if all stickers are clear and complete	•			
33	Inspect the castors and adjust the height, replace the worn casters		•		
34	Carry out a test run	•			

b. Lubricating points

Lubricate the marked points according to the maintenance checklist. The required grease specification is: DIN 51825, standard grease.

1.Driving wheel
2.Steering wheel
3.Driving wheel

Ⅰ. Gearbox

Waste material like used oil, waste batteries or others must be properly disposed and recycled according to the national regulations and if necessary brought to a recycling company. The oil level in the oil tank should not be under the min marks for starting the tractor.

c. Checking electrical components and fuses

Remove the front panel, the fuses are located as shown in the following figure.

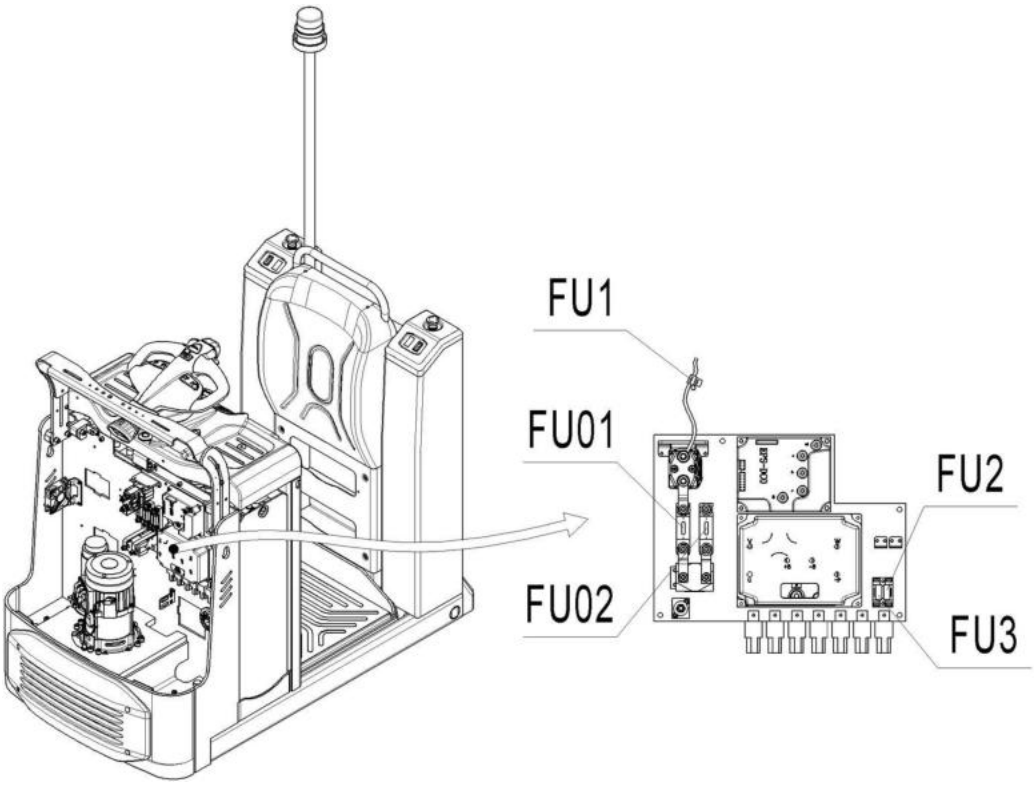

Fuse	Specification
FU1	10 A
FU2	10 A
FU3	15 A
FU01	350 A
FU02	30 A

9. TROUBLE SHOOTING

Fault	Possible cause	Solution
The truck cannot move	The battery connector is not connected well	Check and well-connected the connector well
	The emergency switch is pressed	Release emergency switch
	The pin-code lock is not activated	Activate the pin-code lock
	Low battery	Check SOC and must charge the battery
	Protection device is damaged	Check the protection device
Low driving speed	SOC is under 10%	Charge the battery
	Turtle speed button is pressed	Release turtle speed button
Drive wheel slippage	Overload	Remove load that exceeds the rated capacity
	Floor is not clean	Clean the floor
	Pits on the floor	Remove the trailer and drive out of the pit
	Low ground clearance for side wheels	Adjust ground clearance for side wheels

If you are unable to troubleshoot the tractor after trying all the solutions listed above, contact your local dealer or our after-sales department, who will be responsible for further troubleshooting.

In order to find out the cause of the fault more accurately and quickly, please provide the following important information when you are to contact the local dealer or the after-sales department::

- Serial number of the truck (on the ID plate);
- Fault code on the indicator display;
- Description of the fault;
- The specific part of the tractor with fault;
- Contact details.

10. WIRING/ CIRCUIT DIAGRAM

a. T50N circuit diagram

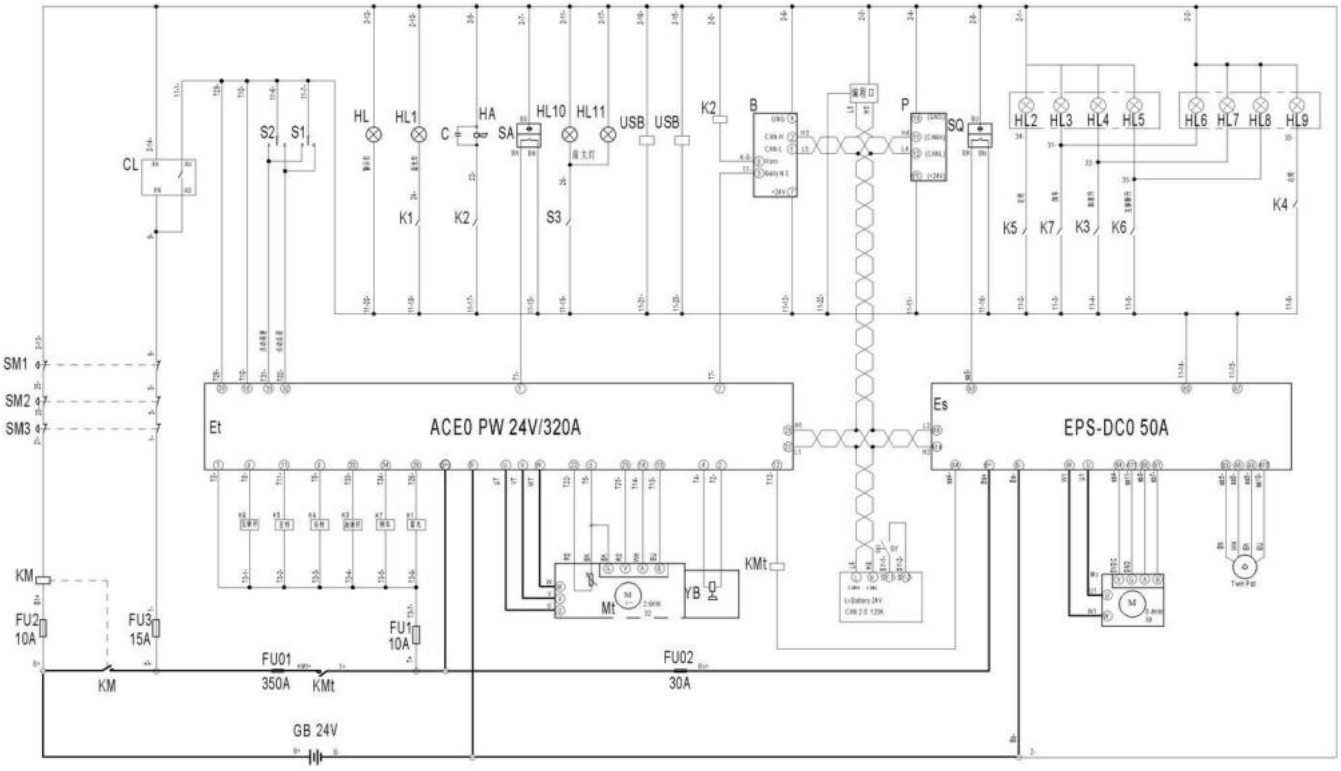

Code Description of Electrical Components:

No.	Code	Name	No.	Code	Name	No.	Code	Name	No.	Code	Name	No.	Code	Name
1	GB	Battery	6	ES	Steering controller	13	C	Capacitance	18	SQ	Switch	24	HL2、HL3、HL4、HL5、HL6、HL7、HL8、HL9	Tri-color Taillight
2	SM1、SM2、SM3	Stop switch	7	Mt	Traction motor	14	S1、S2、S3	Switch	29	USB	USB			
3	FU01、FU02 FU1、FU2、FU3	Fuse	8	YB	Elec. brake	15	HA	Horn	20	Ms	Steering motor			
			9	HL	Warning lamp	16	POT	Potentiometer	21	SA	Switch			
			10	HL1	Blue lamp	17	K1、K2、K3、K4、K5、K6、K7	Relay	22	HL10、HL11	Headlamp			
4	KM、KMt	Main contactor	11	P	Instrument				23	CL	Password lock			
5	Et	Traction controller	12	B	Tiller									

b. T30N circuit diagram

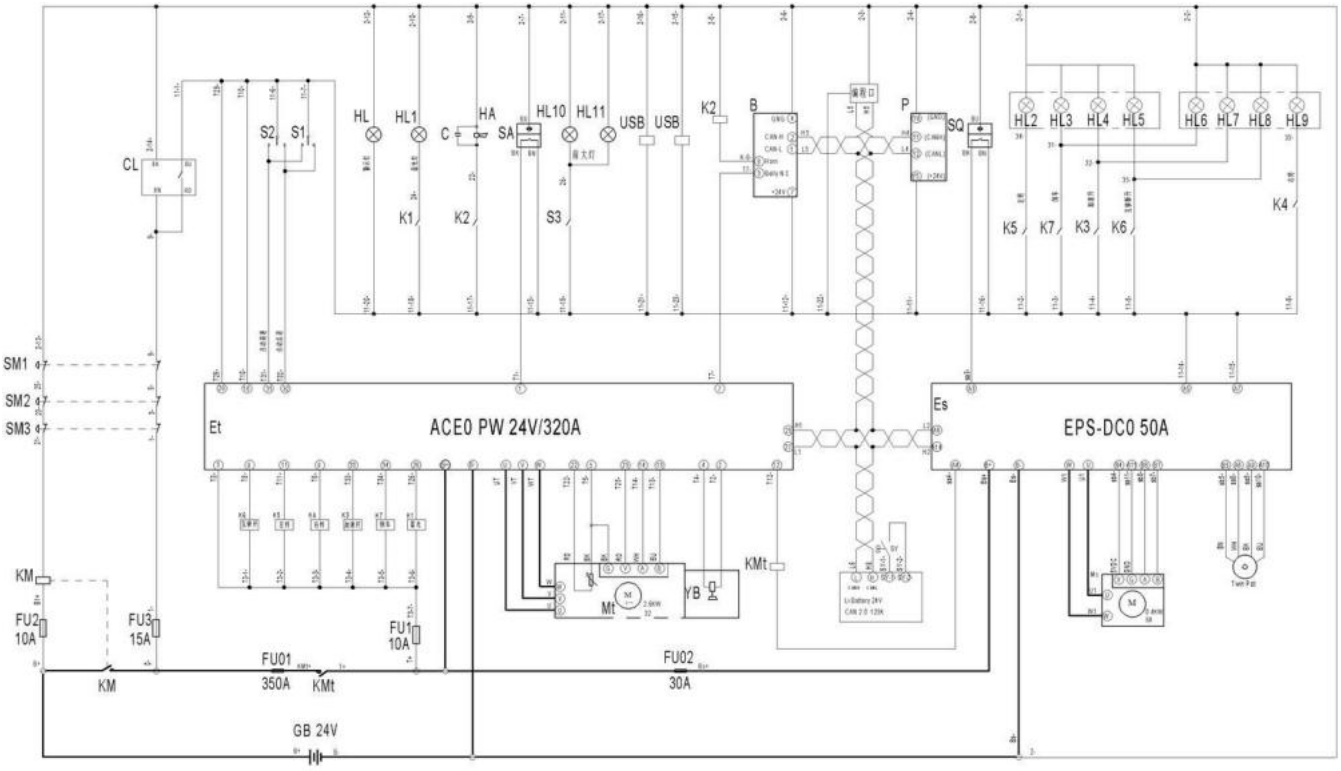

Code Description of Electrical Components:

No.	Code	Name	No.	Code	Name	No.	Code	Name	No.	Code	Name	No.	Code	Name
1	GB	Battery	6	ES	Steering controller	13	C	Capacitance	18	SQ	Switch	24	HL2、HL3、HL4、HL5、HL6、HL7、HL8、HL9	Tri-color Taillight
2	SM1、SM2、SM3	Stop switch	7	Mt	Traction motor	14	S1、S2、S3	Switch	29	USB	USB			
3	FU01、FU02 FU1、FU2、FU3	Fuse	8	YB	Elec. brake	15	HA	Horn	20	Ms	Steering motor			
			9	HL	Warning lamp	16	POT	Potentiometer	21	SA	Switch			
			10	HL1	Blue lamp	17	K1、K2、K3、K4、K5、K6、K7	Relay	22	HL10、HL11	Headlamp			
4	KM、KMt	Main contactor	11	P	Instrument				23	CL	Password lock			
5	Et	Traction controller	12	B	Tiller									