Print Number: Print Date:

NOBLELIFT

Scan QR Code for More

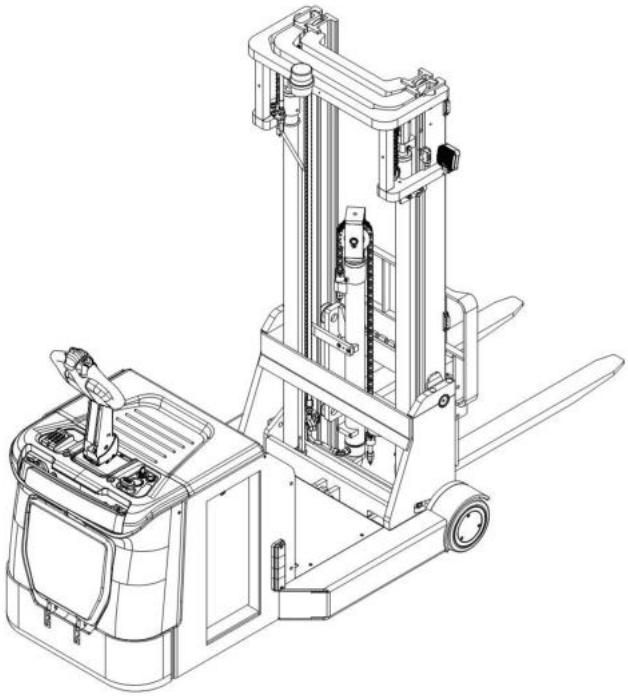

Electric Stacker PSCB12/16/18

PARTS MANUAL

204446020101

Version V02

Truck Identification Number From:

Parts Manual

PSCB12/16/18-PM02EN

Please order parts from authorized dealers of Noblelift Intelligent Equipment Co., LTD.

In order to avoid wrong delivery, all the orders for spare parts should specify the following items:

- Truck model, identification number and manufacture year.
- Orders for spare parts of mast, hydraulic transmission unit, steering axle, motor, etc. shall indicate the manufacture number of these parts.
- Codes for Noblelift spare parts are shown in the table of parts manual. Please also pay attention to the description of supply status, order quantity, etc. (check the number listed in "Mark" column of the parts manual).

"Mark" Column:

The unmarked indicates the parts are in short supply cycle.

Number 1: supply as package. Indicating these that parts are small parts and seal parts, which are supplied in package unit and in short supply cycle.

Number 2: supply with constraints. Indicating that these spare parts are not in stock and will be prepared for production after receiving the order from customers, which are in long supply cycle.

Number 3: phasing-out supply. Indicating that these parts will be replaced by new parts due to technical improvements and the current stock will not be available when these parts run out. Please check the description of technical improvements notice.

Number 4: supply as assembly. Indicating that these parts are assembly parts defined by manufacture process, which cannot be supplied as a single part.

Number 5: check other tables.

This parts manual is the property of Noblelift and can be shared under the confidential agreement only, Noblelift has the right to claim for compensation of any unauthorized use. Copy without permission is not allowed. Figures in the manual are not limited by the original design. Noblelift Intelligent Equipment Co., LTD reserves the right to improve the products for continuous technology progress.

Table of Contents

Chapter 1: Drive System 5

01 Drive Unit (204446013501) 5

01 Drive Unit (204446013501) Continue 7

02 Drive Unit 2.6KW (204446013502) 9

Chapter 2: Hydraulic System 11

01 Hydraulic Pipeline (204446024001) 11

01 Hydraulic Pipeline (204446024001) Continue 13

02 Pump Unit (VIBO,3.0KW) (535946023501) 15

03 Hydraulic Unit 24V3.2KW4.0cc (534746023501) 17

Chapter 3: Truck Frame 19

01 Chassis (204446021501) 19

01 Chassis (204446021501) Continue 21

02 Cell Cover Assembly (204446021001) 23

03 Protective Arm (204446017501) 25

04 Platform Assembly (204446018001) 27

05 Fork Carriage (204446038001) 29

Chapter 4: Mast System 31

01 Single Mast (204446043001) 31

01 Single mast (204446043001) Continue 33

02 Two-stage Mast standard lift (204446044001) 35

02 Two-stage Mast Standard Lift (204446044001) Continue 37

03 Triple Mast Full Free Lift (204446044501) 39

03 Triple Mast Full Free Lift (204446044501) Continue 1 41

03 Triple Mast Full Free Lift (204446044501) Continue 2 43

Chapter 5: Steering System, Braking System, Wheels 45

01 Tiller Unit (204446011001) 45

02 Control Handle (204446011002) 47

03 Handle Cap Kit (204446011003) 49

04 Control Handle(REMA) (535946011002) 51

05 Load Wheel (202046017001) 53

Chapter 6: Electrical Parts 55

01 Display Assembly (204446010001) 55

02 Wire Harness (204446033001) 57

03 Wire Harness(equipped with lights)(204446033002) 59

04 Electronic Components (204446033003) 61

05 Electronic Components(equipped with lights) (204446033004) 63

06 Charger (204446036501) 65

07 Traction Battery (204446037001) 67

Chapter 7: Special Parts 69

01 Load Backrest (216546040501) 69

02 Lights (204446035501) 71

Chapter 8: Others 73

01 Label and Decal (US) (204446047001) 73

02 Label and Decal (EU) (204446047002) 75

Appendix 77

01 Electrical Circuit Diagram 77

02 Electrical Circuit Diagram(equipped with lights) 78

03 Hydraulic Circuit Diagram (VIBO) 79

04 Hydraulic Circuit Diagram (HPI) 80

05 Consumable Parts List 81

Chapter 1: Drive System

01 Drive Unit (204446013501)

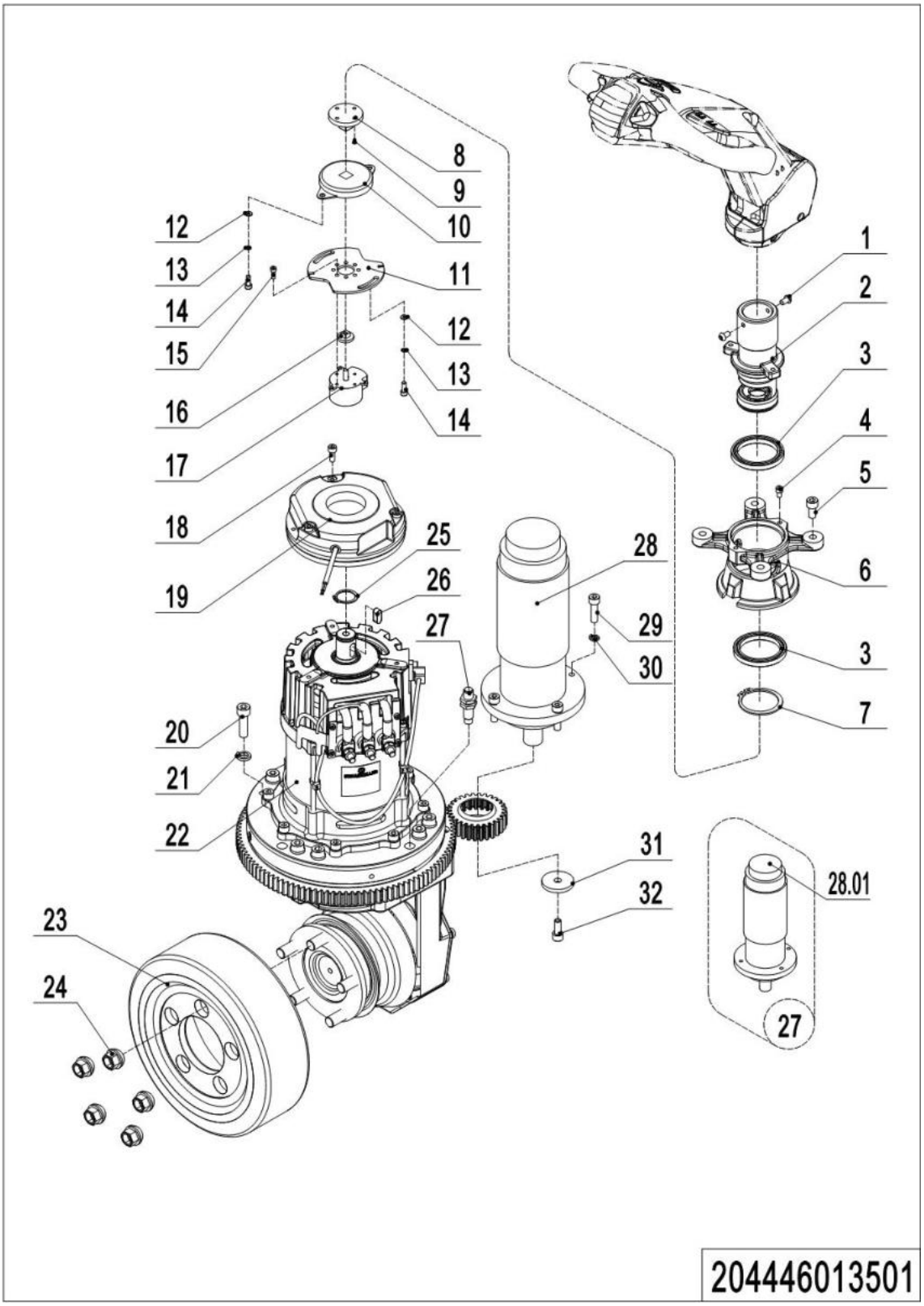

01 Drive Unit (204446013501)

No.	Item Code	Mark	Item Description	Qty.	Substitute	Note
1	910200300016	1	Screw	2		
2	535931510001	2	Bracket	1		
3	910700200041		Bearing	2		
4	910200200032	1	Screw	3		
5	910200200075	1	Screw	4		
6	505631520002		Fixing Base	1		
7	910401300024	1	Circlip	1		
8	505631520005		Link Block	1		
9	910200200013	1	Screw	1		
10	940801200001		Rotary Damper	1		
11	535931520002		Mounting Plate	1		
12	910400100004	1	Flat Washer	4		
13	910400500004	1	Spring Washer	4		
14	910200200021	1	Screw	4		
15	910200200014	1	Screw	4		
16	505931520002		Link Block	1		
17	921800200008		Potentiometer	1		
18	910200200046		Screw	1		
19	940700100002		Brake	3		
20	910200200078		Screw	8		
21	910400500007		Spring Washer	8		
22	940900600004		Steering Unit	1		**See 204446013502**
23	940300400002		WheelΦ250x82	1		
24	275015520005		Nut	5		
25	910401300014		Circlip	1		
26	910600800019		Flat Key	1		
27	920200400007		Proximity Switch	1		
28	920900100050		Motor	1		
28.01	921800200016		Encoder	1		
29	910200200059		Screw	4		

1= Supply as package. 2= Supply with constraints. 3= Phasing-out supply. 4= Supply as assembly. 5= Check other tables.

01 Drive Unit (204446013501) Continue

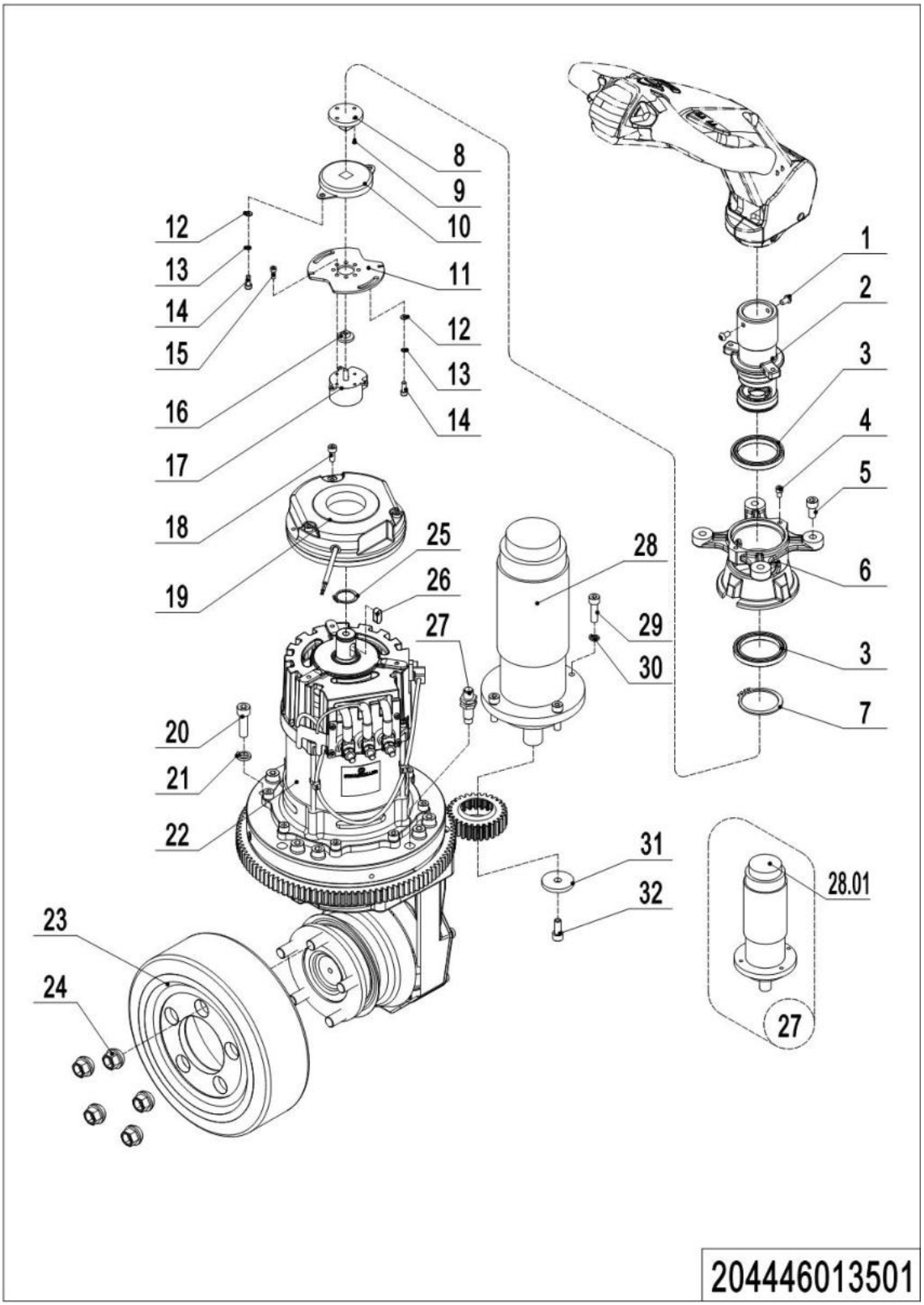

01 Drive Unit (204446013501) Continue

No.	Item Code	Mark	Item Description	Qty.	Substitute	Note
30	910400500006		Spring Washer	4		
31	506013520001		Baffle	1		
32	910200200057		Screw	1		

02 Drive Unit 2.6KW (204446013502)

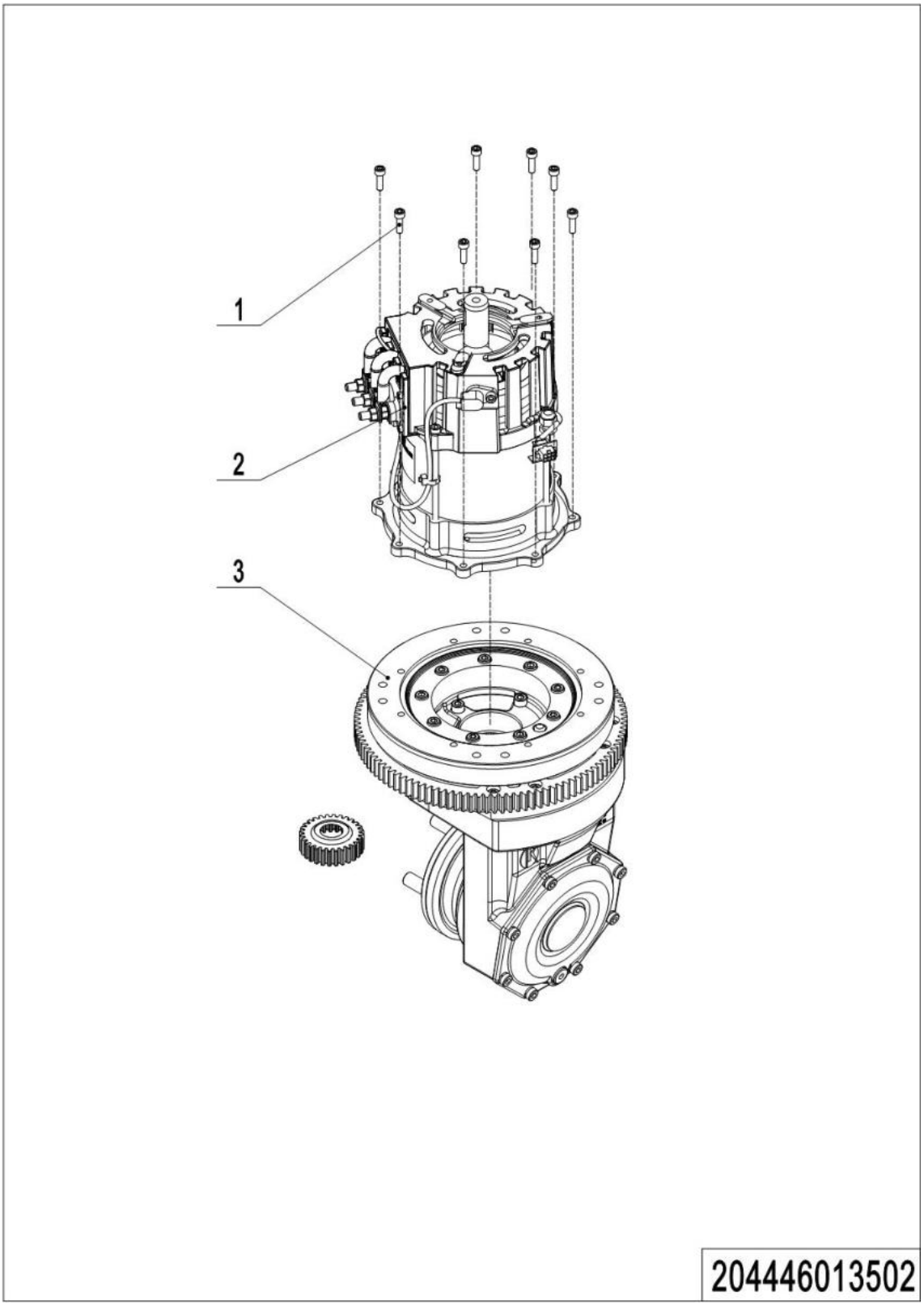

1= Supply as package. 2= Supply with constraints. 3= Phasing-out supply. 4= Supply as assembly. 5= Check other tables.

02 Drive Unit 2.6KW ((204446013502)

No.	Item Code	Mark	Item Description	Qty.	Substitute	Note
1	910200200036		Screw	8		
2	505998510010		Motor	1		
3	505998510011		Gear Box	1		

1= Supply as package. 2= Supply with constraints. 3= Phasing-out supply. 4= Supply as assembly. 5= Check other tables.

Chapter 2: Hydraulic System

01 Hydraulic Pipeline (204446024001)

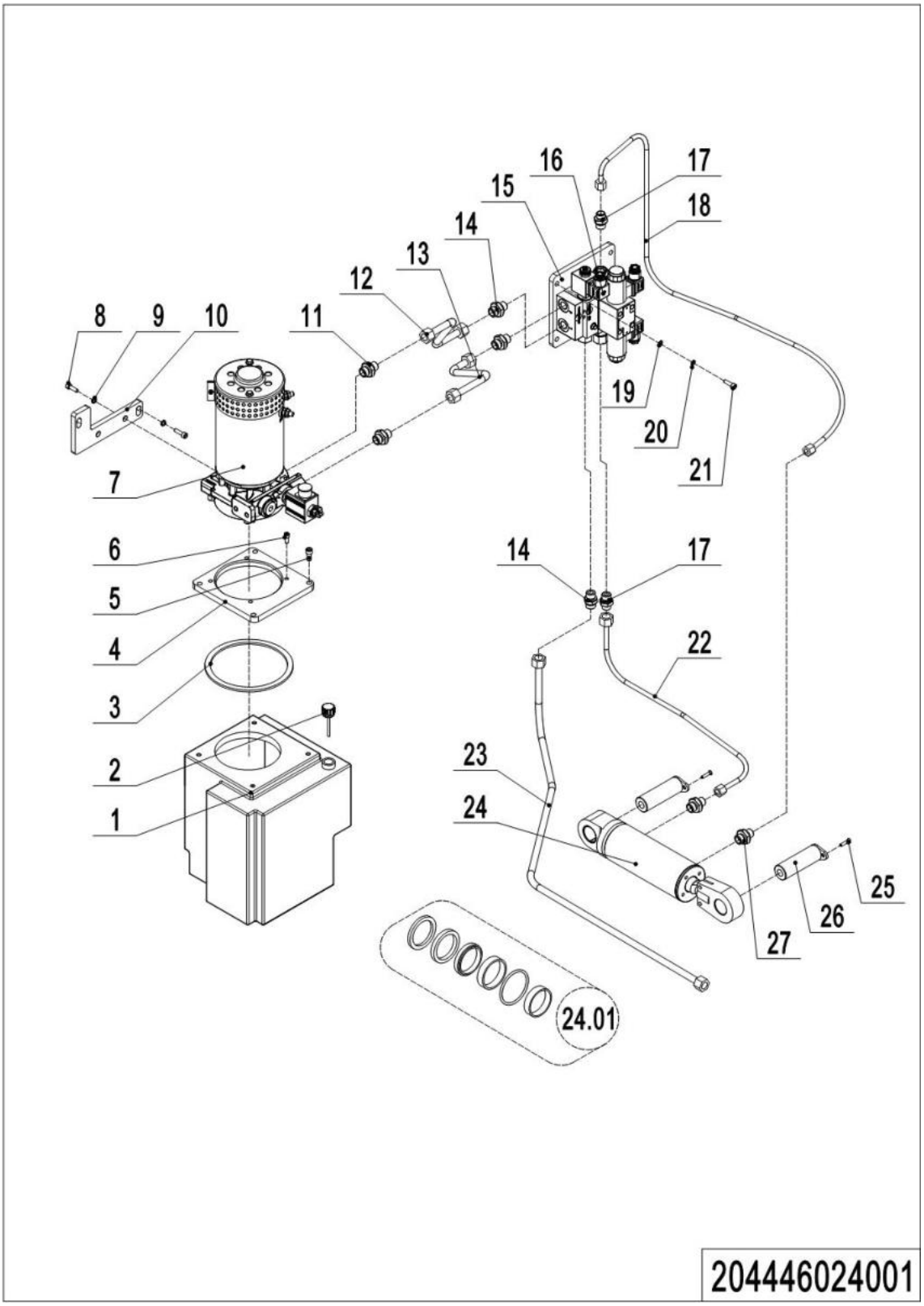

01 Hydraulic Pipeline (204446024001)

No.	Item Code	Mark	Item Description	Qty.	Substitute	Note
1	535919020001		Tank	1		
2	951100200001	1	Screw Plug	1		**M18x1.5**
3	535919020003		Sealing Gasket	1		
4	535919020005	5	Mounting Plate	1		
5	910200200057		Screw	4		**M8x20**
6	910200200034		Screw	4		**M6x14**
7	950900100062		Pump Unit	1		
7	950900100015		Pump Unit	1		**See 534746023501**
8	910200200074		Screw	4		**M10x16**
9	910400500007		Spring Washer	4		**10**
10	535924020001		Mounting Plate	1		
11	950400300008		Joint	2		
12	204424010012		Pipe	1		**VIBO**
12	204424010003		Pipe	1		**HPI**
13	204424010011		Outlet Tube	1		**VIBO**
13	204424010002		Outlet Tube	1		**HPI**
14	950400300009		Joint	3		
15	204424020001		Mounting Plate	1		
16	950600100024		Hydraulic Valve	1		**VIBO**
16	950600100008		Hydraulic Valve	1		**HPI**
17	950400300004		Joint	2		
18	204424010013		Hose	1		**PSCB 12**
18	204424010007		Hose	1		**PSCB 16**
18	204424010009		Hose	1		**PSCB 18**
19	910400100006		Flat Washer	8		**8**
20	910400500006		Spring Washer	8		**8**
21	910200200057		Screw	8		**M8x20**
22	204424010014		Hose	1		**PSCB 12**
22	204424010006		Hose	1		**PSCB 16**
22	204424010008		Hose	1		**PSCB 18**

1= Supply as package. 2= Supply with constraints. 3= Phasing-out supply. 4= Supply as assembly. 5= Check other tables.

01 Hydraulic Pipeline (204446024001) Continue

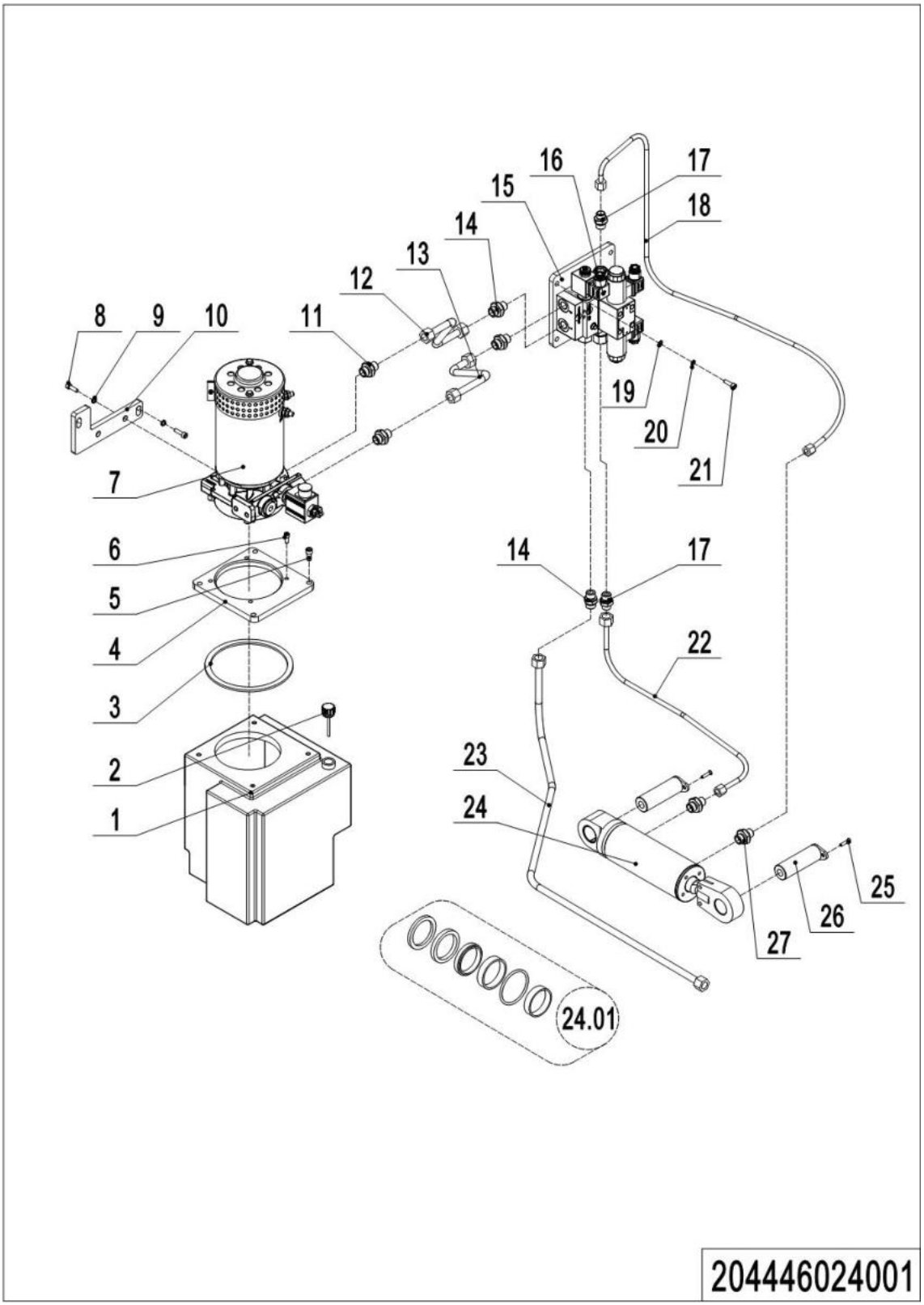

01 Hydraulic Pipeline (204446024001) Continue

No.	Item Code	Mark	Item Description	Qty.	Substitute	Note
23	204424010015		Hose	1		**PSCB 12**
23	204424010004		Hose	1		**PSCB 16**
23	204424010010		Hose	1		**PSCB 18**
24	204424010005		Cylinder	1		
24.01	204498510000		Seal Kit	1		
25	910200400016		Screw	2		
26	535045010008		Pin	2		
27	950400400001		Joint	2		

02 Pump Unit (VIBO,3.0KW) (535946023501)

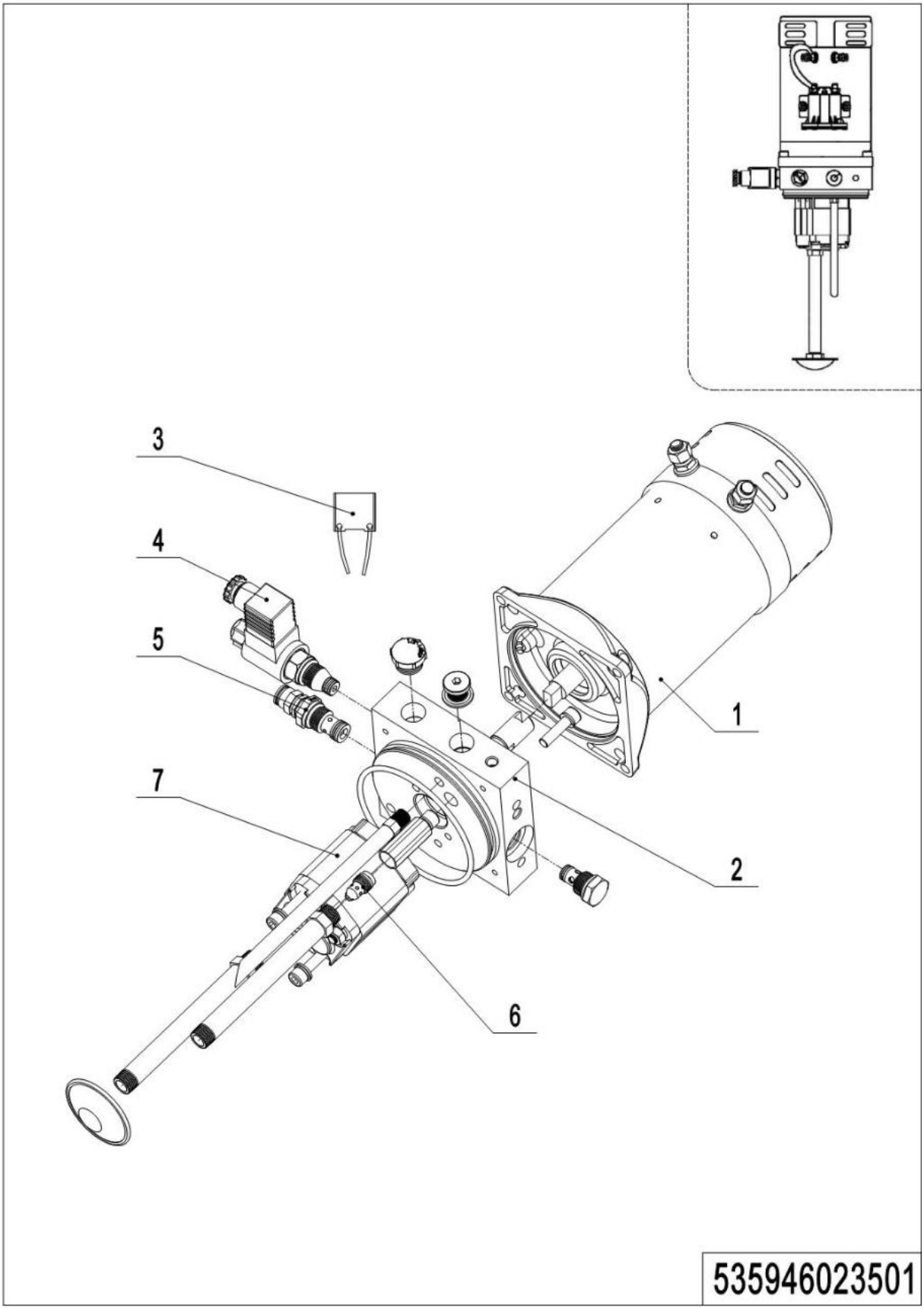

1= Supply as package. 2= Supply with constraints. 3= Phasing-out supply. 4= Supply as assembly. 5= Check other tables.

02 Pump Unit (VIBO,3.0KW) (535946023501)

No.	Item Code	Mark	Item Description	Qty.	Substitute	Note
--	950900100062	5	Pump Unit	1		**VIBO,3.0KW**
1	535998510008		Motor	1		
2	535998520018		Valve Block	1		
3	535998510013		Carbon Brush	1		
4	535998510009		Magnetic Valve	1		
5	535998510011		Overflow Valve	1		
6	535998510012		Valve	1		
7	505998510013		Gear Pump	1		

03Hydraulic Unit 24V3.2KW4.0cc (534746023501)

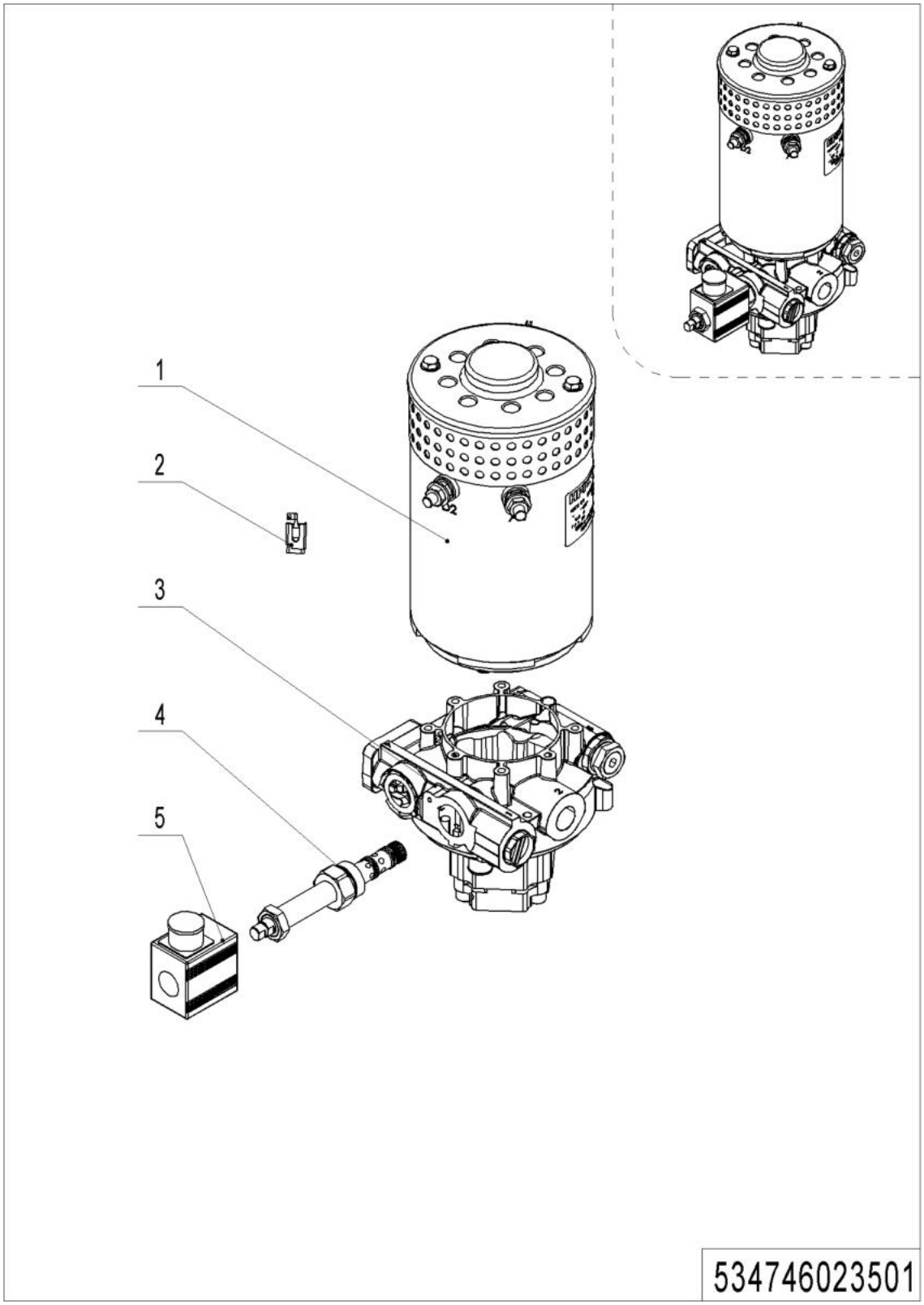

1= Supply as package. 2= Supply with constraints. 3= Phasing-out supply. 4= Supply as assembly. 5= Check other tables.

03 Hydraulic Unit 24V3.2KW4.0cc (534746023501)

No.	Item Code	Mark	Item Description	Qty.	Substitute	Note
--	950900100015		Pump Unit	1		
1	534798510006	2	Motor	1		
2	534798520026	2	Carbon Brush	1		
3	534798510007	2	Valve Block	1		
4	534798520024	2	Magnetic Valve	1		**Provide with coil**
5	534798520025	2	Coil	1		**Provide with valve**

Chapter 3: Truck Frame

01 Chassis (204446021501)

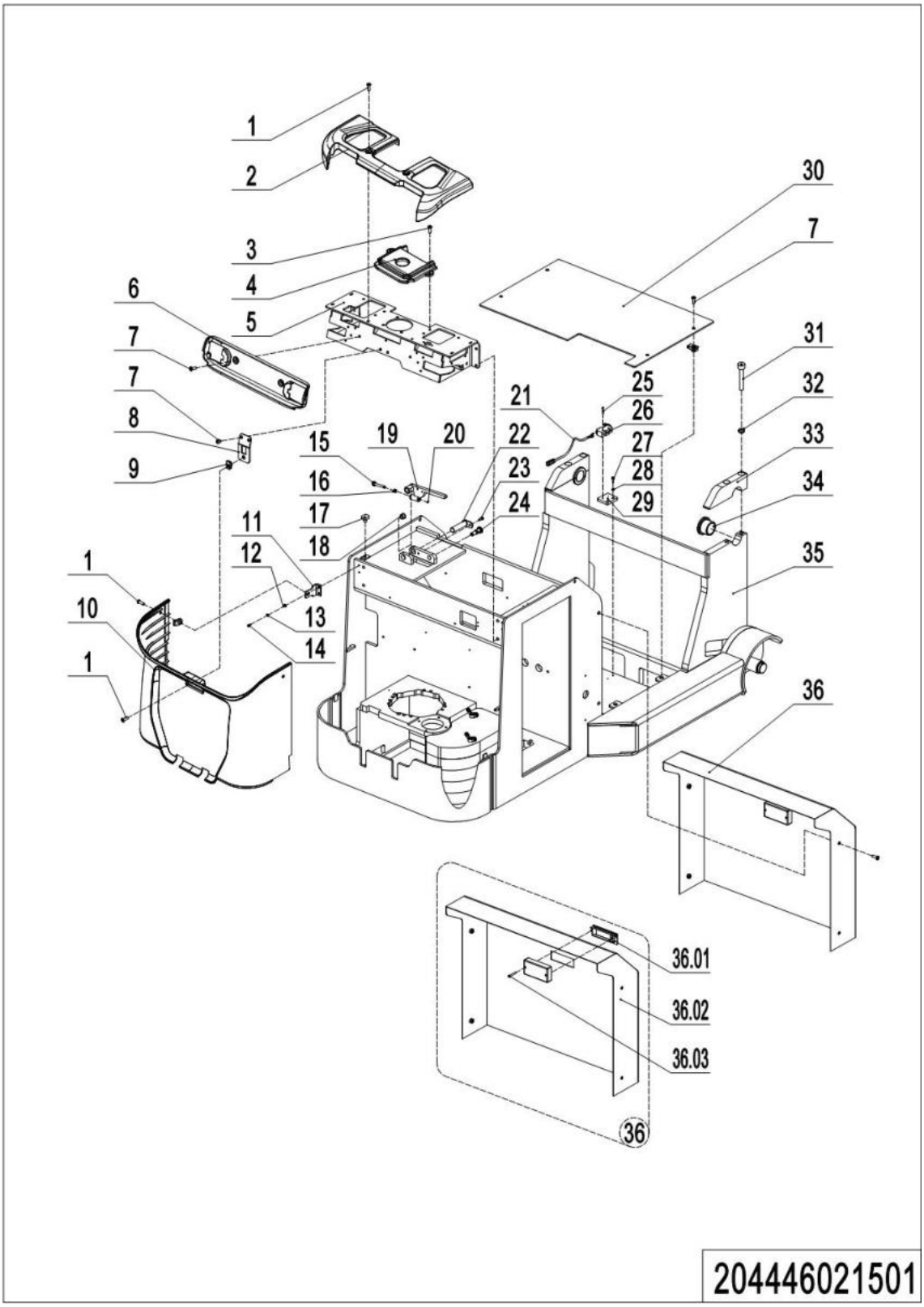

01 Chassis (204446021501)

No.	Item Code	Mark	Item Description	Qty.	Substitute	Note
1	941100100004		Screw	5		
2	535921520040		Protective Cover	1		
3	910200200074		Screw	2		
4	535921520042		Protective Cover	1		
5	535917510000		Mounting Base	1		
6	535921520041		Protective Cover	1		
7	941100100005		Screw	12		
8	535921520032		Mounting Plate	1		
9	940400400003		Cage Nut	7		
10	535921520039		Protective Cover	1		
11	535921520031		Mounting Plate	2		
12	910400100005		Flat Washer	13		
13	910400500005		Spring Washer	13		
14	910200200035		Screw	8		
15	535921520037		Pin	1		
16	535921520038		Spacer Bush	1		
17	505938520016		Crash Pad	1		
18	940500200008		Bushing	2		
19	535921510003		Baffle	1		
20	910401300002		Circlip	1		
21	204433010017		Wire Harness	1		
22	535921510004		Pin	1		
23	910200400017		Screw	1		
24	940800900002		Indexing Plunger	1		
25	910200500016		Screw	2		
26	920200300003		Microswitch	1		
27	910200200016		Screw	2		
28	910400100003		Flat Washer	2		
29	204424020002		Mounting Plate	1		
30	204421520051		Close Plate	1		**PSCB 12**

01 Chassis (204446021501) Continue

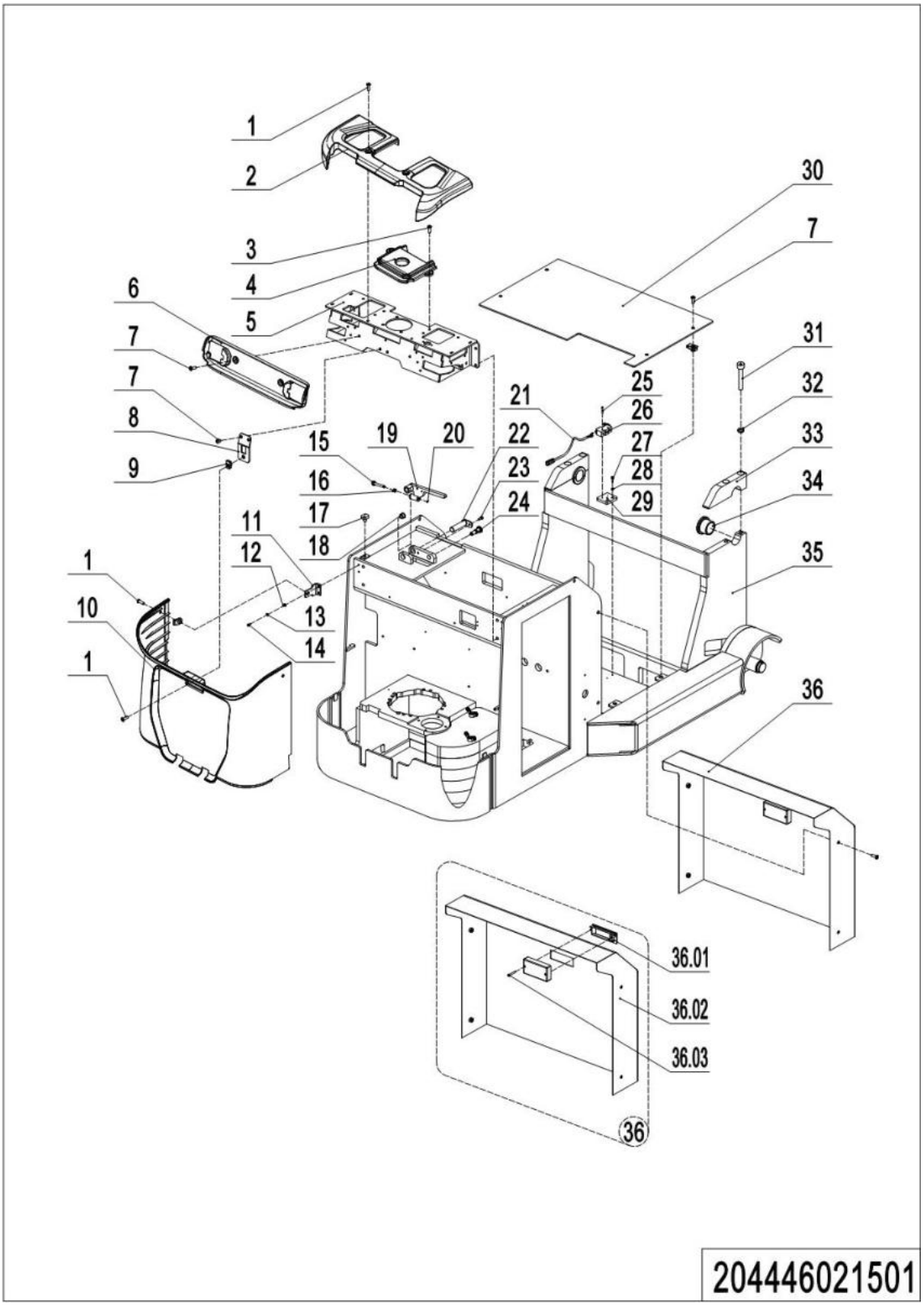

01 Chassis (204446021501) Continue

No.	Item Code	Mark	Item Description	Qty.	Substitute	Note
30	204421520027		Close Plate	1		**PSCB 16**
30	204421520042		Close Plate	1		**PSCB 18**
31	910200200126		Screw	4		
32	910400500010		Spring Washer	4		
33	204421520026		Press Plate	2		
34	940500400001		Bearing	2		
35	204421510004		Chassis(PSCB 12)	1		
35	204421510000		Chassis(PSCB 16)	1		
35	204421510003		Chassis(PSCB 18)	1		
36	204421510002		Cover Kit	1		
36.01	206521510010		Handle	1		
36.02	204421510001		Cover	1		
36.03	910200500015		Screw	2		

02 Cell Cover Assembly (204446021001)

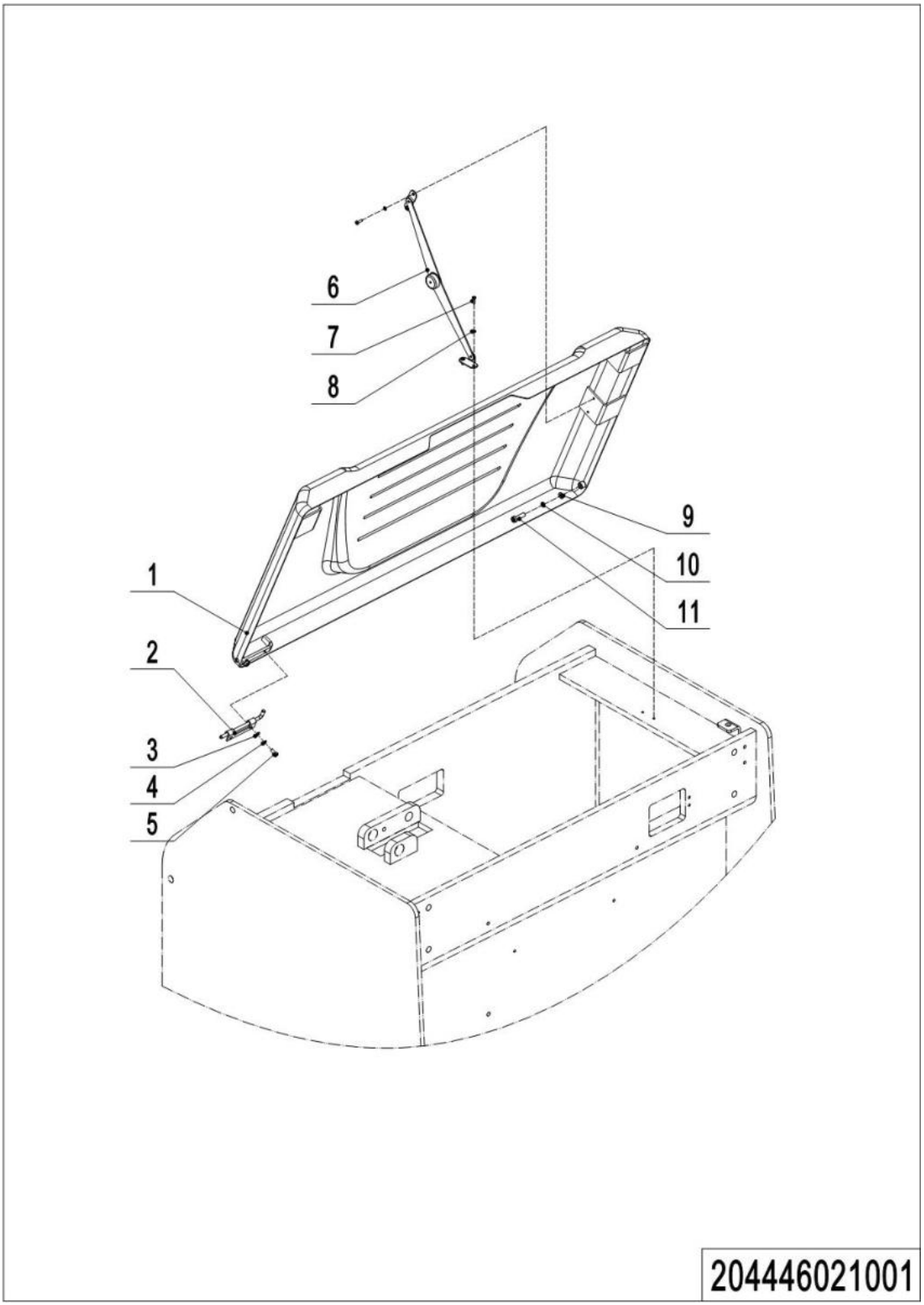

1= Supply as package. 2= Supply with constraints. 3= Phasing-out supply. 4= Supply as assembly. 5= Check other tables.

02 Cell Cover Assembly (204446021001)

No.	Item Code	Mark	Item Description	Qty.	Substitute	Note
1	204421010001		Cell Cover	1		
2	940800900001		Lock Pin	1		
3	910400100003		Flat Washer	2		
4	910400500003		Spring Washer	2		
5	910200200013		Screw	2		
6	206521510003		Stopper	1		
7	910200300006		Screw	4		
8	910400500003		Spring Washer	4		
9	910400100004		Flat Washer	1		
10	910400500004		Spring Washer	1		
11	910200200024		Screw	1		

03 Protective Arm (204446017501)

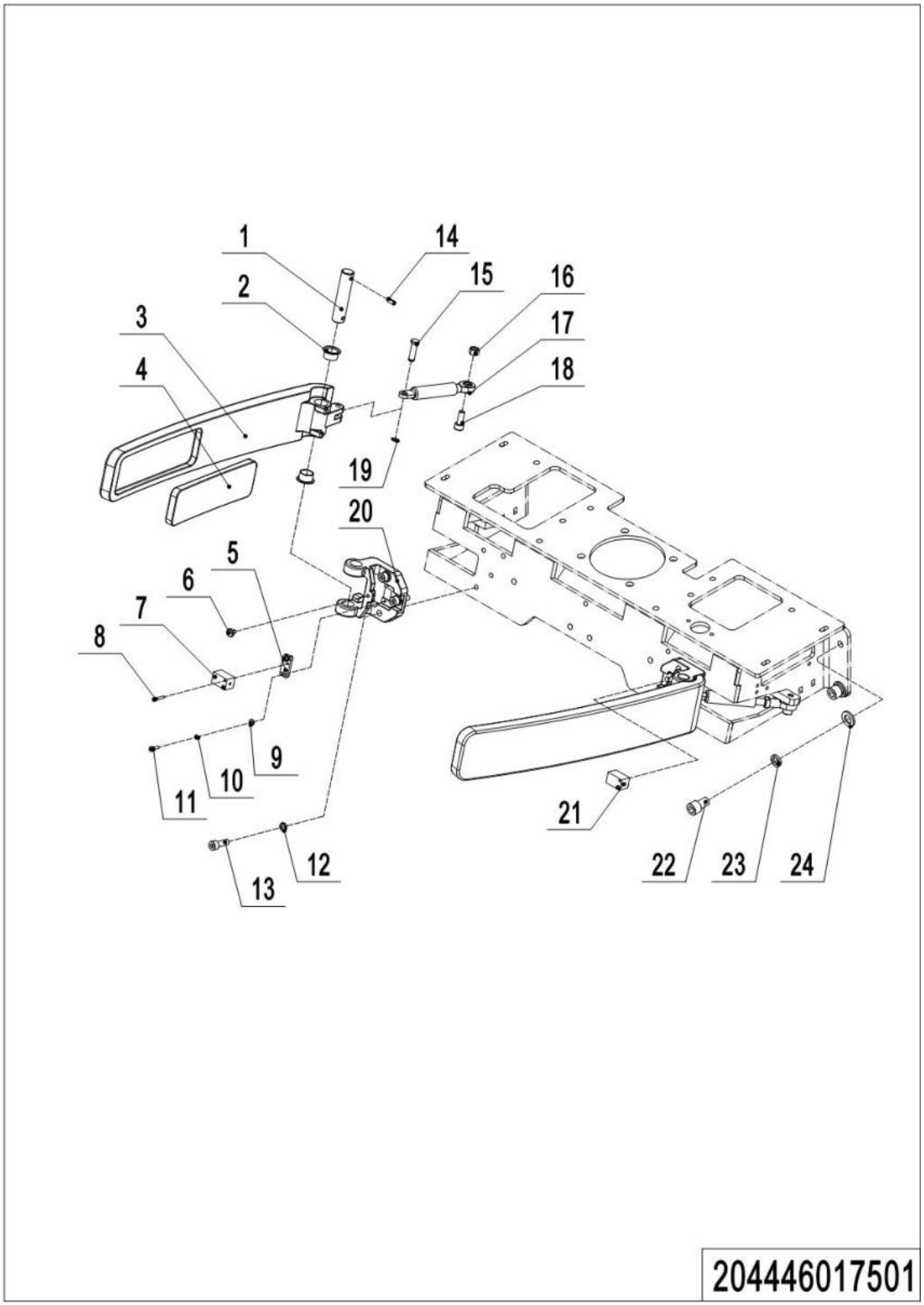

1= Supply as package. 2= Supply with constraints. 3= Phasing-out supply. 4= Supply as assembly. 5= Check other tables.

03 Protective Arm (204446017501)

No.	Item Code	Mark	Item Description	Qty.	Substitute	Note
1	535917520007		Axle	2		
2	940500200003		Bushing	2		
3	535917520008		Protective Arm	2		
4	535917520009		Protective Mat	2		
5	535917520011		Mounting Plate	2		
6	535917520012		Protective Mat	2		
7	535933510001		Proximity Switch	1		
8	910200500015	1	Screw	4		
9	910400100003	1	Flat Washer	8		
10	910400500003	1	Spring Washer	8		
11	910200200014	1	Screw	8		
12	910400500006	1	Spring Washer	6		
13	910200200058	1	Screw	6		
14	910600400025	1	Spring Pin	2		
15	535917520010		Axle	2		
16	910300100006	1	Nut	2		
17	940400100037		Air Spring	2		
18	910200200060	1	Screw	2		
19	910401300001	1	Circlip	2		
20	535917520006		Mounting Base	2		
21	535933510000		Proximity Switch	1		
22	910200200096	1	Screw	4		
23	910400500008	1	Spring Washer	4		
24	910400100008	1	Flat Washer	4		

04 Platform Assembly (204446018001)

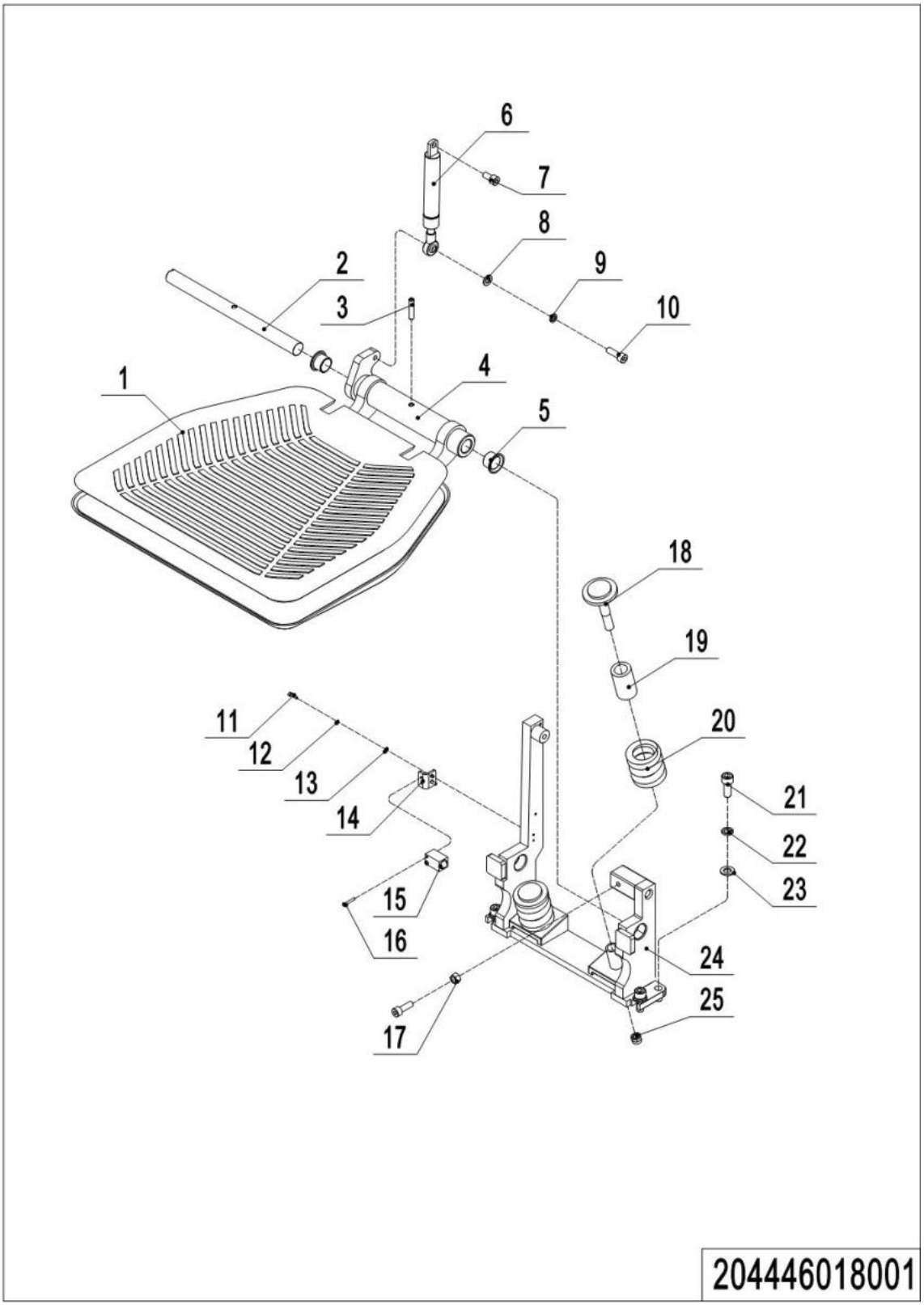

04 Platform Assembly (204446018001)

No.	Item Code	Mark	Item Description	Qty.	Substitute	Note
1	535918020019		Pedal Pad	1		
2	535918020014		Axle	1		
3	910600400040		Spring Pin	1		
4	535918010001		Platform	1		
5	940500200008		Bushing	2		
6	940400100038		Air Spring	1		
7	910200200057		Screw	1		
8	910400100006		Flat Washer	1		
9	910400500006		Spring Washer	1		
10	910200200058		Screw	2		
11	910200200014		Screw	4		
12	910400500003		Spring Washer	4		
13	910400100003		Flat Washer	4		
14	535918020015		Mounting Plate	1		
15	535933510002		Proximity Switch	1		
16	910200500015		Screw	2		
17	910300100007		Nut	1		
18	535918020017		Bolt	2		
19	535918020018		Cushion Collar	2		
20	535918020016		Spring	2		
21	910200200076		Screw	4		
22	910400500007		Spring Washer	4		
23	910400100007		Flat Washer	4		
24	535918010000		Mounting Base	1		
25	910300500006		Nut	2		

05 Fork Carriage (204446038001)

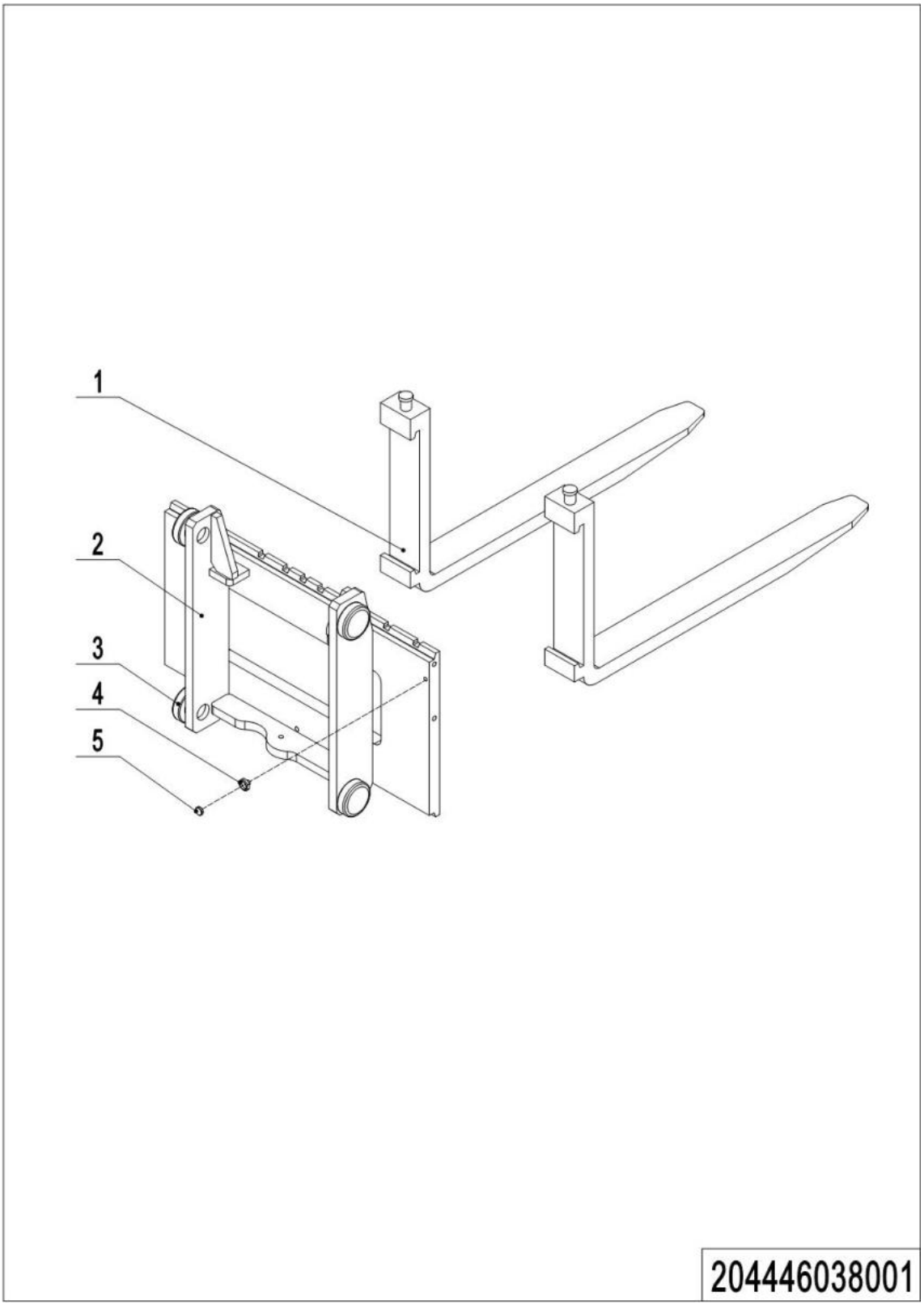

1= Supply as package. 2= Supply with constraints. 3= Phasing-out supply. 4= Supply as assembly. 5= Check other tables.

05 Fork Carriage (204446038001)

No.	Item Code	Mark	Item Description	Qty.	Substitute	Note
1	940100100001		Fork100x35x920	2		**PSCB 12/16**
1	940100100002		Fork100x35x950	2		**PSCB 12/16**
1	940100100003		Fork100x35x1070	2		**PSCB 12/16**
1	940100100004		Fork100x35x1150	2		**PSCB 12/16**
1	940100100005		Fork100x35x1220	2		**PSCB 12/16**
1	940100100006		Fork100x35x1370	2		**PSCB 12/16**
1	940100100029		Fork100x35x1520	2		**PSCB 12/16**
1	940100100036		Fork120x40x920	2		**PSCB 18**
1	940100100008		Fork120x40x1070	2		**PSCB 18**
1	940100100037		Fork120x40x1100	2		**PSCB 18**
1	940100100010		Fork120x40x1150	2		**PSCB 18**
1	940100100009		Fork120x40x1220	2		**PSCB 18**
1	940100100011		Fork120x40x1370	2		**PSCB 18**
1	940100100012		Fork120x40x1520	2		**PSCB 18**
2	204438010002		Fork	1		**Single mast**
2	204438010001		Fork	1		**DX**
2	204438010000		Fork	1		**TX+FFL**
3	940200300004		Compound Roller	4		
4	940600200001		Mounting Base	1		
5	940600100001		Magnetic Steel	1		

1= Supply as package. 2= Supply with constraints. 3= Phasing-out supply. 4= Supply as assembly. 5= Check other tables.

Chapter 4: Mast System

01 Single Mast (204446043001)

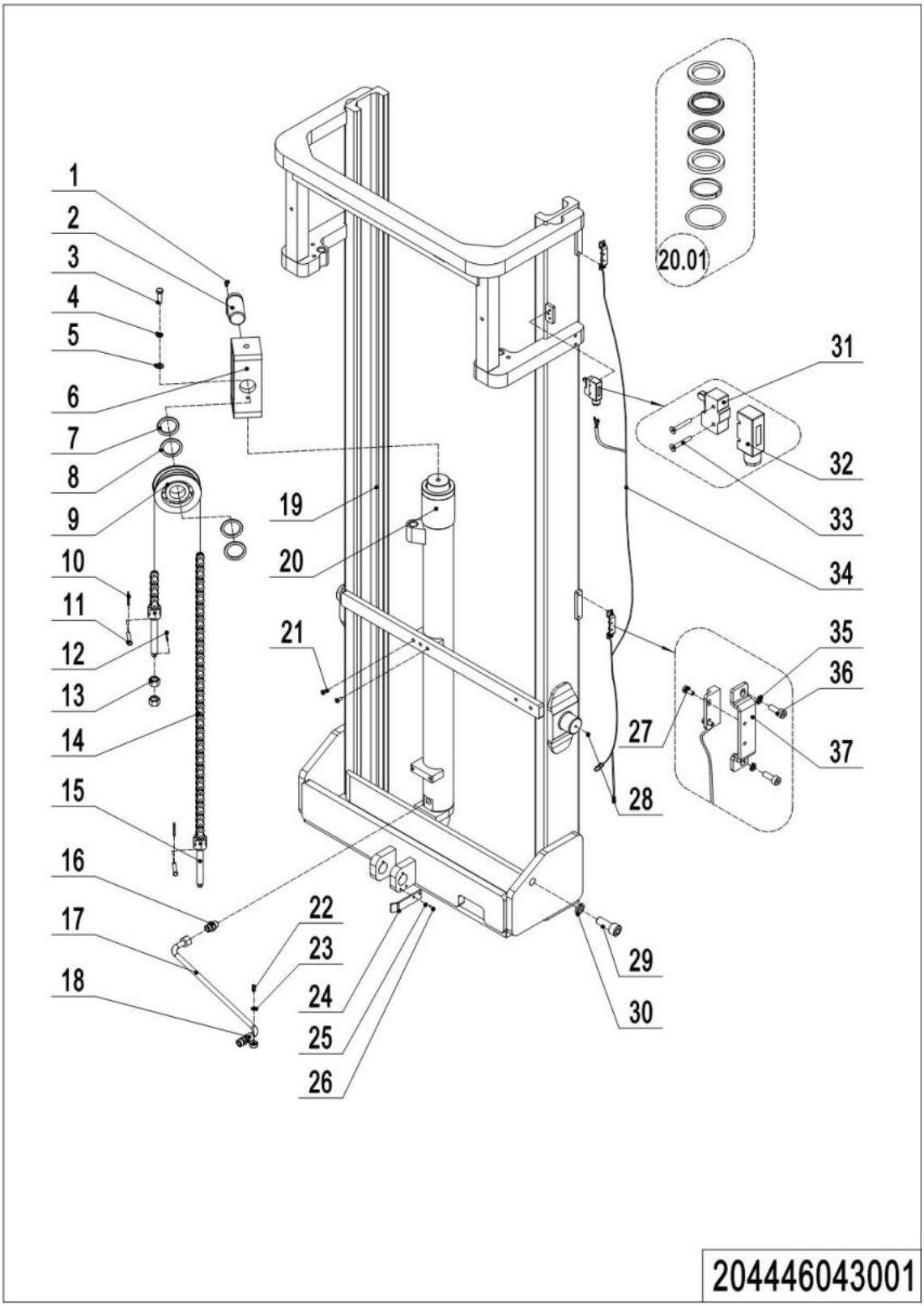

01 Single Mast (204446043001)

No.	Item Code	Mark	Item Description	Qty.	Substitute	Note
1	910200400016		Screw	1		
2	535045010008		Pin	1		
3	910100300050		Bolt	1		
4	910400500008		Spring Washer	1		
5	910400100008		Flat Washer	1		
6	204444510003		Wheel Carrier	1		
7	940600500008		Washer	2		
8	940600500009		Washer	2		
9	940200500011		Sprocket Bearing	1		
10	910600600006		Cotter Pin	2		
11	941100800009		Pin	2		
12	910600600023		Cotter Pin	2		
13	910300200008		Nut	4		
14	204444510026		Chain	1		
15	535045020024		Chain Anchor	2		
16	950400400004		Joint	1		
17	204443010001		Steel Tube	1		
18	951000100001		Hose Clamp	1		
19	204443010000		Outer Mast(1600)	1		
20	201043010002		Cylinder	1		
20.01	201098510006		Seal Kit	1		
21	910200400026		Screw	2		
22	910200200032		Screw	1		
23	910400100005		Flat Washer	1		
24	204424020003		Stop Plate	1		
25	910400100003		Flat Washer	2		
26	910200200016		Screw	2		
27	910200500010		Screw	4		
28	911200100001		Oil Cup	2		
29	910200200129		Screw	2		

1= Supply as package. 2= Supply with constraints. 3= Phasing-out supply. 4= Supply as assembly. 5= Check other tables.

01 Single mast (204446043001) Continue

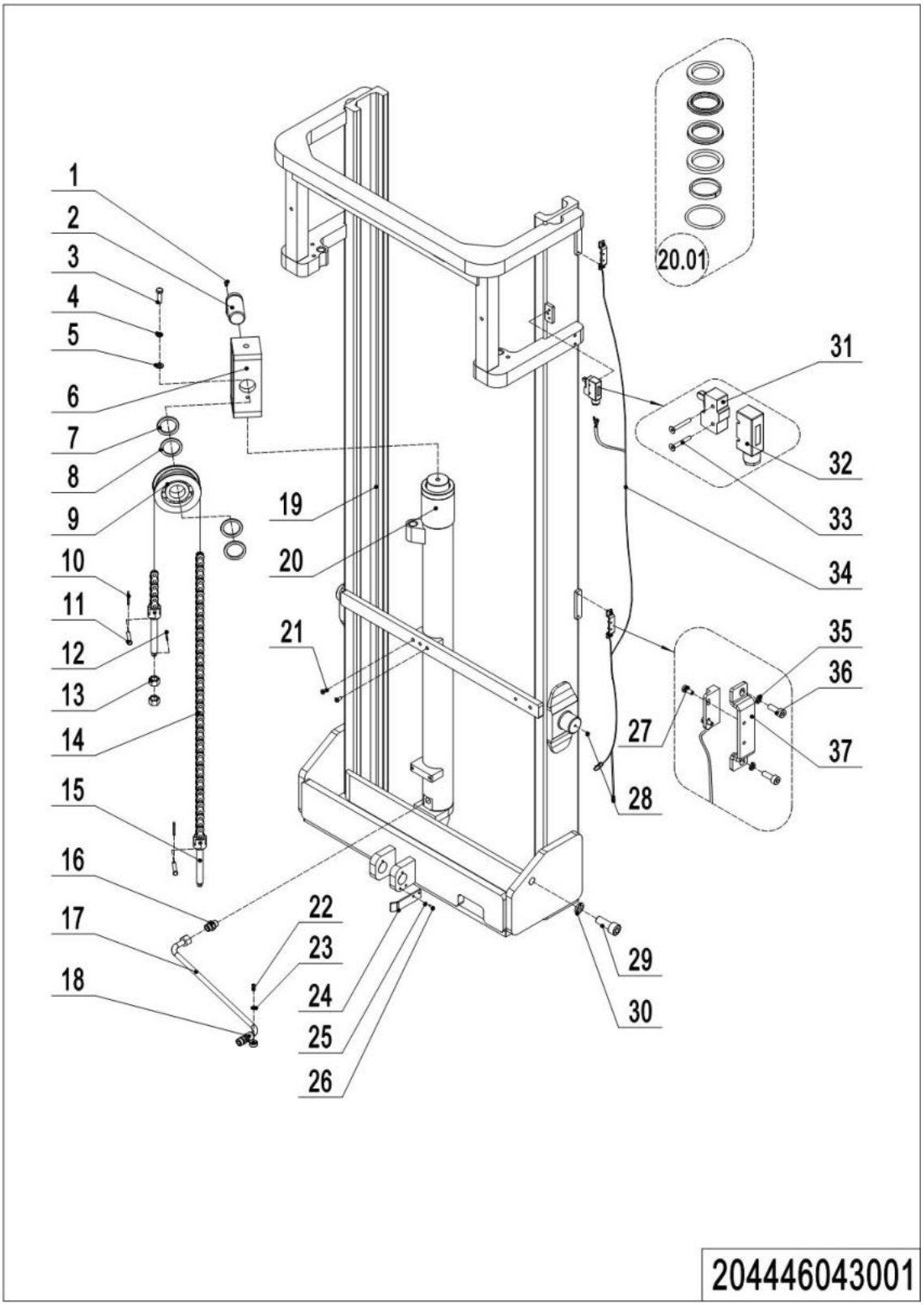

01 Single mast (204446043001) Continue

No.	Item Code	Mark	Item Description	Qty.	Substitute	Note
30	910400500012		Spring Washer	2		
31	920200300001		Microswitch	1		
32	920200300008		Protective Cover	1		
33	910200500028		Screw	2		
34	204333010017		Wire Harness	1		
35	910400500003		Spring Washer	4		
36	910200200014		Screw	4		
37	534744520059		Protective Cover	2		

02 Two-stage Mast standard lift (204446044001)

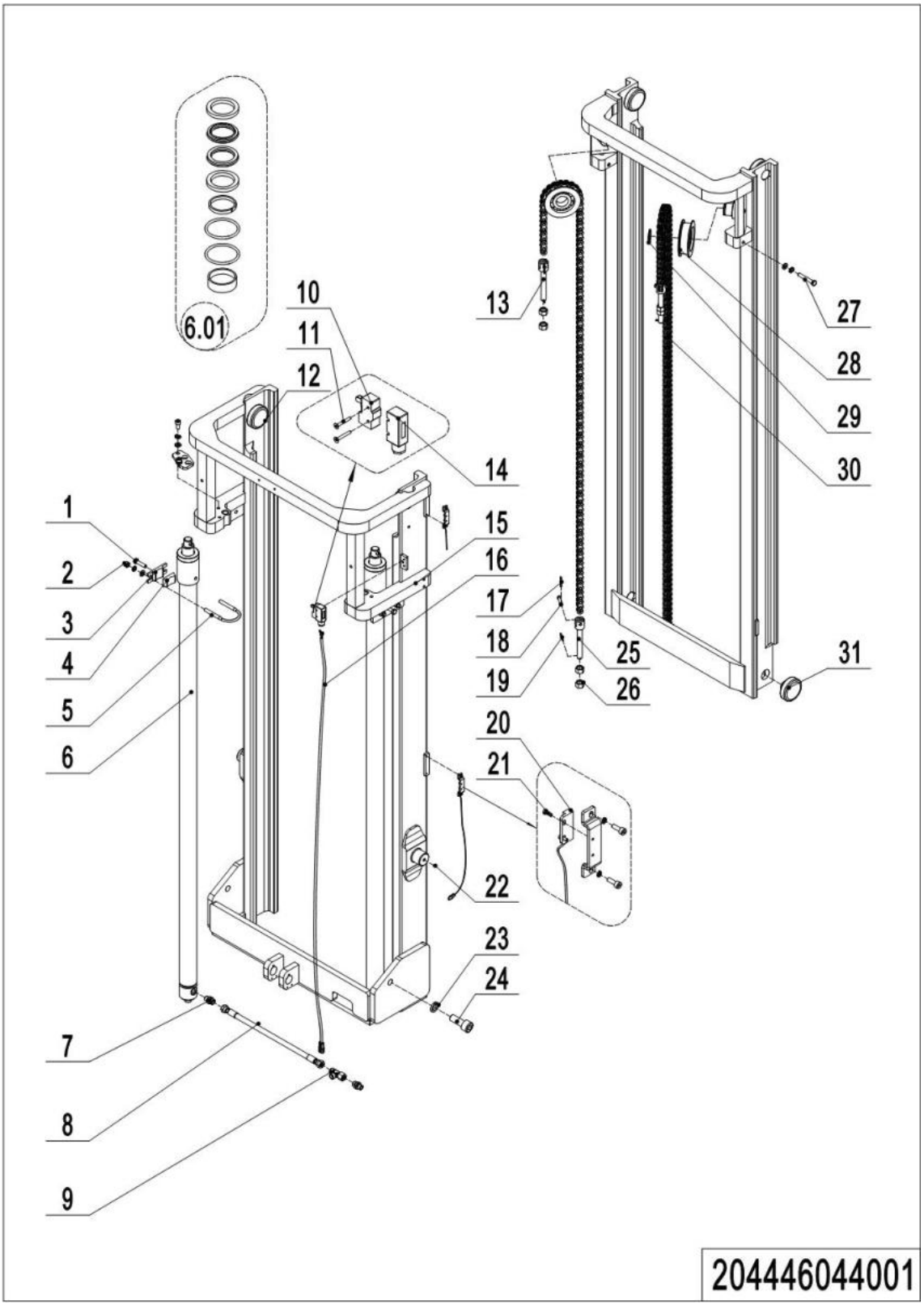

02 Two-stage Mast standard lift (204446044001)

No.	Item Code	Mark	Item Description	Qty.	Substitute	Note
1	910100300039		Bolt	2		
2	910300100007		Nut	6		
3	255044020130		Fixing Base	2		
4	255044020129		Protective Cover	1		
5	201044520017		Bolt	2		
6	204444010002		Cylinder	2		**2500**
6	201044510008		Cylinder	2		**3000**
6	204444010005		Cylinder	2		**3200**
6	204444010008		Cylinder	2		**3600**
6	204444010011		Cylinder	2		**4000**
6.01	201098510005		Seal Kit	1		
7	950400400004		Joint	2		
8	201044020002		Hose	1		
9	950401000001		Joint	1		
10	920200300001		Microswitch	1		
11	910200500028		Screw	2		
12	940200300004		Compound Roller	2		
13	252044020121		Chain Anchor	2		
14	920200300008		Protective Cover	1		
15	204444010000		Outer Mast(2500)	1		**2500**
15	204444510000		Outer Mast(4500)	1		**3000**
15	204444010003		Outer Mast(3200)	1		**3200**
15	204444010006		Outer Mast(3600)	1		**3600**
15	204444010009		Outer Mast(4000)	1		**4000**
16	204433010002		Wire Harness	1		**Ordering with mast height**
17	910600600006		Cotter Pin	6		
18	941100800008		Pin	4		
19	910600600023		Cotter Pin	4		
20	920200500001		Magnetic Switch	2		**Ordering with mast height**
21	910200500010		Screw	4		

1= Supply as package. 2= Supply with constraints. 3= Phasing-out supply. 4= Supply as assembly. 5= Check other tables.

02 Two-stage Mast Standard Lift (204446044001) Continue

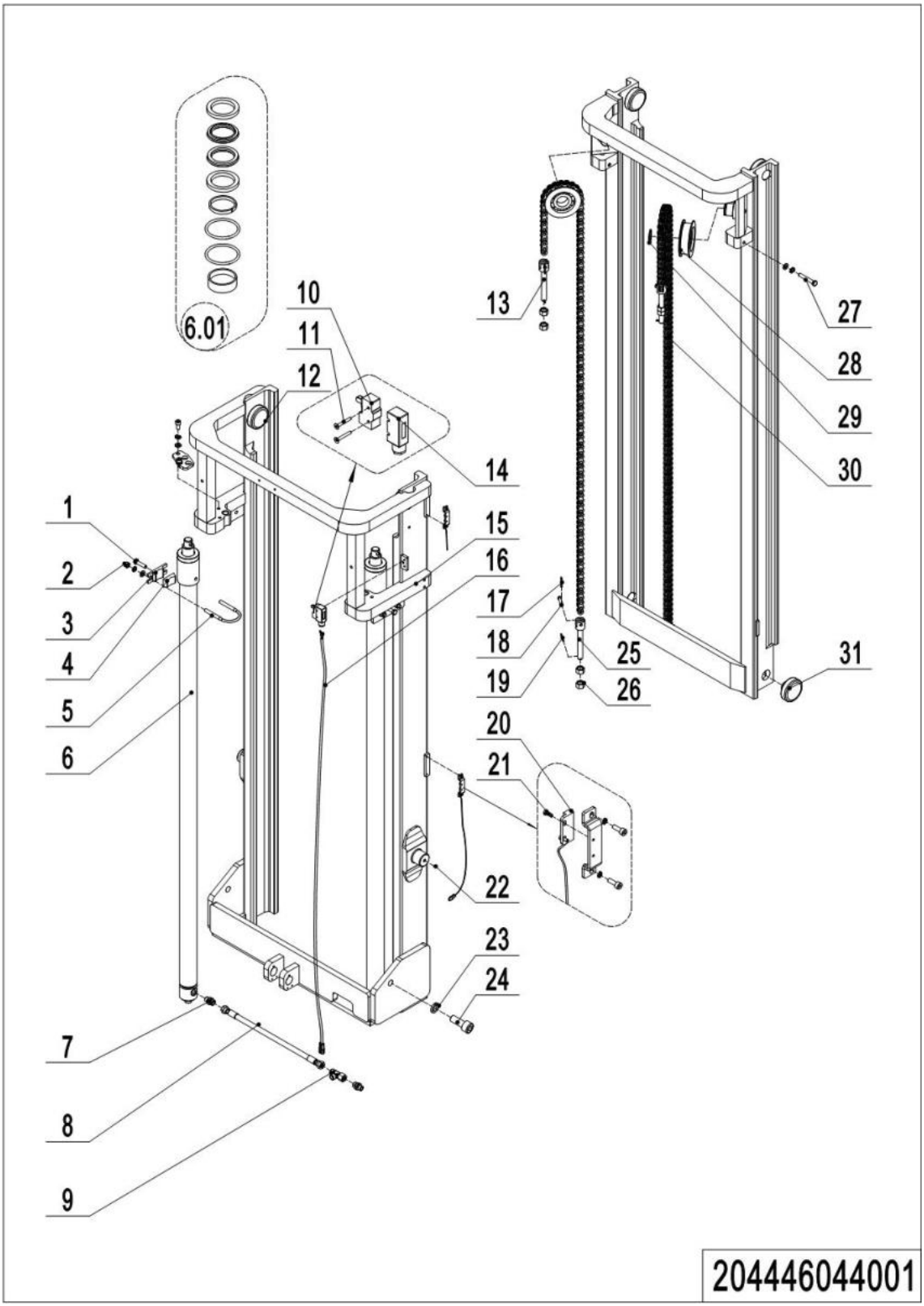

02 Two-stage Mast Standard Lift (204446044001) Continue

No.	Item Code	Mark	Item Description	Qty.	Substitute	Note
22	911200100001		Oil Cup	2		
23	910400500012		Spring Washer	2		
24	910200200129		Screw	2		
25	533243520008		Chain Anchor	2		
26	910300200008		Nut	4		
27	910100300039		Bolt	2		
28	940200500007		Sprocket Bearing	2		
29	910401300020		Circlip	2		
30	204444510019		Chain	2		**2500**
30	201044510017		Chain	2		**3000**
30	204444010013		Chain	2		**3200**
30	204444010012		Chain	2		**3600**
30	212044510111		Chain	2		**4000**
31	940200300007		Compound Roller	2		

03 Triple Mast Full Free Lift (204446044501)

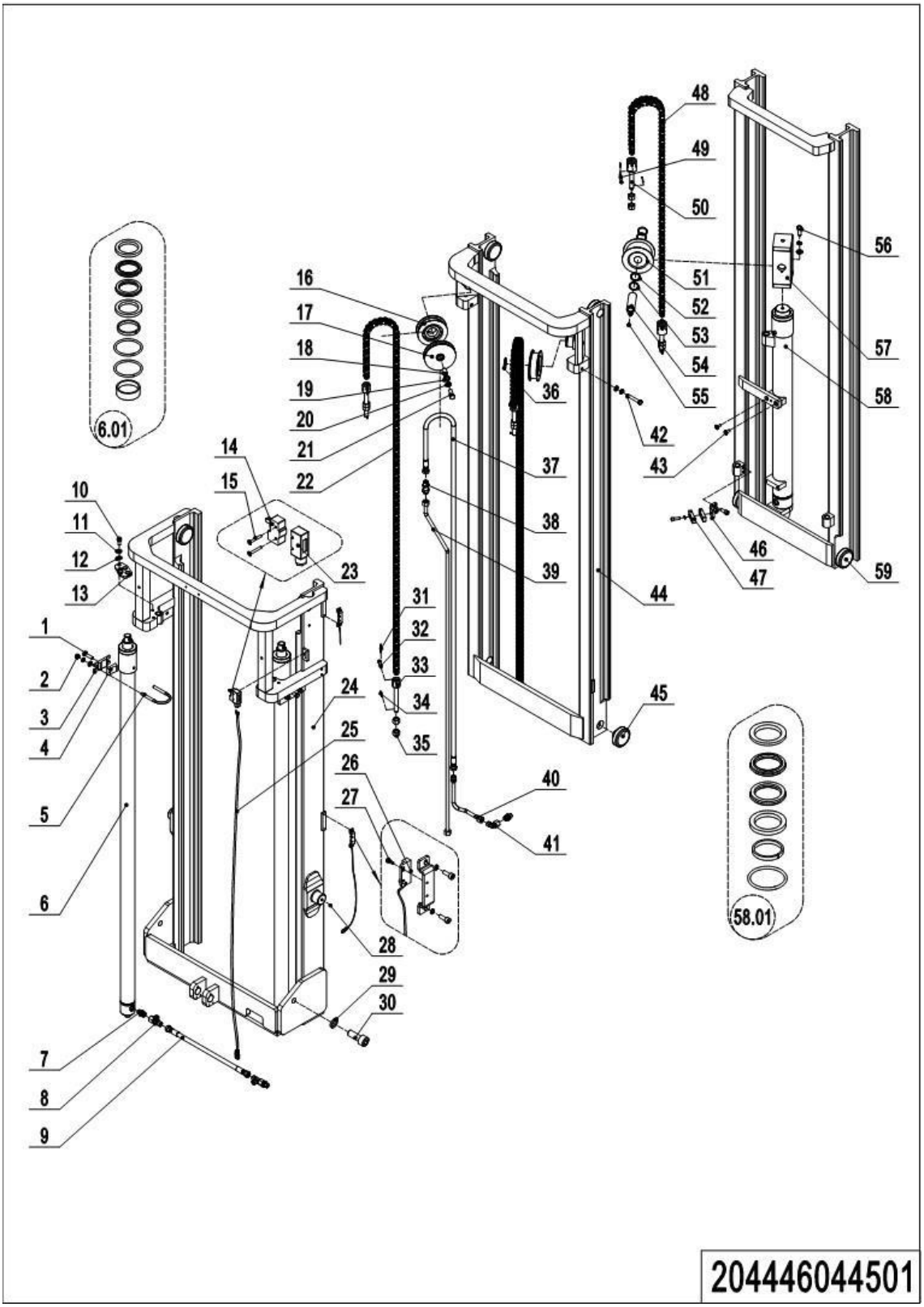

03 Triple Mast Full Free Lift (204446044501)

No.	Item Code	Mark	Item Description	Qty.	Substitute	Note
1	910100300039		Bolt	2		
2	910300100007		Nut	6		
3	255044020130		Fixing Base	2		
4	255044020129		Protective Cover	1		
5	201044520017		Bolt	2		
6	201044510009		Cylinder	2		**3600**
6	204444510013		Cylinder	2		**4000**
6	204444510011		Cylinder	2		**4300**
6	201044510008		Cylinder	2		**4500**
6.01	201098510005		Seal Kit	1		
7	950400400004		Joint	3		
8	950401000001		Joint	2		
9	201044520086		Hose	1		
10	910200200075		Screw	4		
11	910400500007		Spring Washer	12		
12	910400100007		Flat Washer	11		
13	201044520029		Mounting Plate	1		
14	920200300001		Microswitch	1		
15	910200500028		Screw	2		
16	940200500001		Sprocket Bearing	2		
17	201044520040		Pulley	1		
18	201044520041		Sleeve	1		
19	910400100008		Flat Washer	2		
20	910400500008		Spring Washer	3		
21	910100300052		Bolt	1		
22	201044510019		Chain	2		**3600**
22	204444510025		Chain	2		**4000**
22	204444510019		Chain	2		**4300**
22	201044510017		Chain	2		**4500**
23	920200300008		Protective Cover	1		

1= Supply as package. 2= Supply with constraints. 3= Phasing-out supply. 4= Supply as assembly. 5= Check other tables.

03 Triple Mast Full Free Lift (204446044501) Continue 1

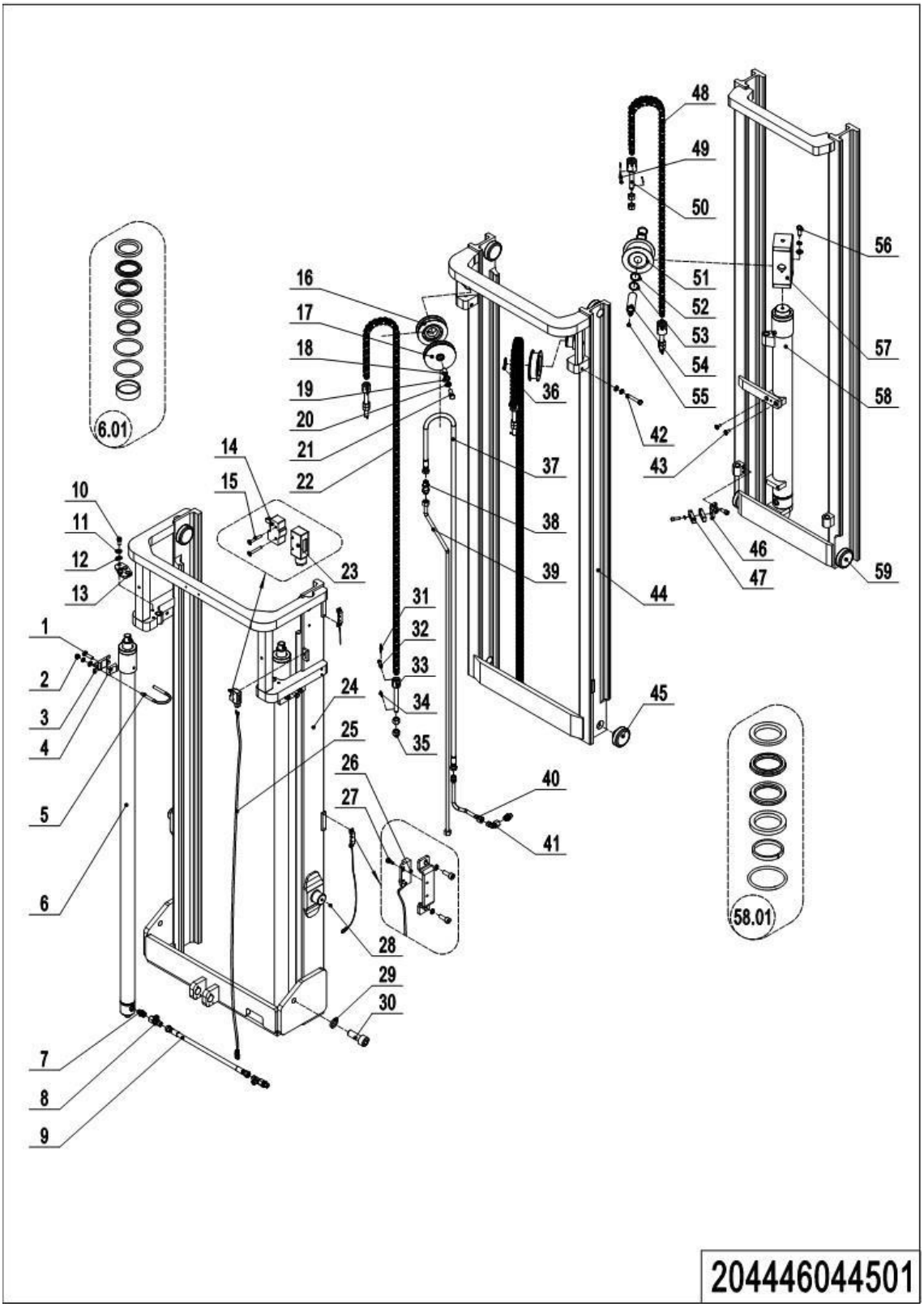

1= Supply as package. 2= Supply with constraints. 3= Phasing-out supply. 4= Supply as assembly. 5= Check other tables.

03 Triple Mast Full Free Lift (204446044501) Continue 1

No.	Item Code	Mark	Item Description	Qty.	Substitute	Note
24	204444510002		Outer Mast(3600)	1		**3600**
24	204444510008		Outer Mast(4000)	1		**4000**
24	204444510005		Outer Mast(4300)	1		**4300**
24	204444510000		Outer Mast(4500)	1		**4500**
25	204433010002		Wire Harness	1		**Ordering with mast height**
26	920200500001		Magnetic Switch	2		
27	910200500010		Screw	4		
28	911200100001		Oil Cup	2		
29	910400500012		Spring Washer	2		
30	910200200129		Screw	2		
31	910600600006		Cotter Pin	6		
32	941100800008		Pin	4		
33	533243520008		Chain Anchor	2		**4500/4000/3600**
33	252044020121		Chain Anchor	2		**4300**
34	910600600023		Cotter Pin	6		
35	910300200008		Nut	12		
36	910401300020		Circlip	1		
37	201044520083		Hose	1		**3600**
37	204444510018		Hose	1		**4000**
37	204444510016		Hose	1		**4300**
37	201044520082		Hose	1		**4500**
38	950400500002		Joint	1		
39	204444520029		Steel Tube	1		**3600**
39	204444520028		Steel Tube	1		**4000**
39	204444520027		Steel Tube	1		**4300**
39	204444520026		Steel Tube	1		**4500**
40	201044520077		Steel Tube	1		
41	950400200004		Joint	1		
42	910100100036		Bolt	2		
43	910200400025		Screw	2		

03 Triple Mast Full Free Lift (204446044501) Continue 2

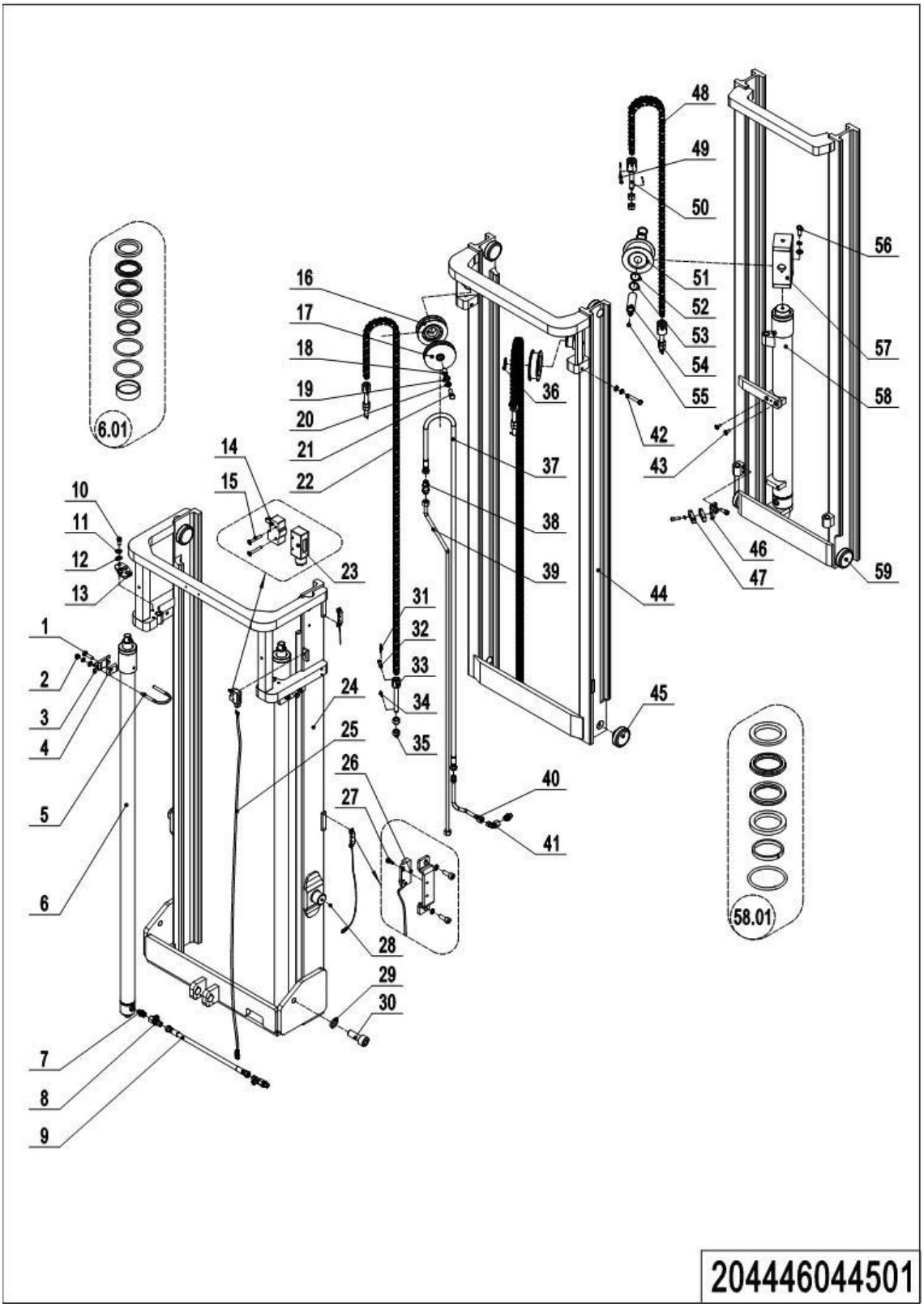

1= Supply as package. 2= Supply with constraints. 3= Phasing-out supply. 4= Supply as assembly. 5= Check other tables.

03 Triple Mast Full Free Lift (204446044501) Continue 2

No.	Item Code	Mark	Item Description	Qty.	Substitute	Note
44	201044510005		Middle Mast(3600)	1		**3600**
44	204444510009		Middle Mast(4000)	1		**4000**
44	204444510006		Middle Mast(4300)	1		**4300**
44	201044510004		Middle Mast(4500)	1		**4500**
45	940200300007		Compound Roller	2		
46	201044520060		Mounting Plate	1		
47	201044520023		Pipe Clip	2		
48	204444510004		Chain	1		**4500**
48	204444510021		Chain	1		**4300**
48	535044510017		Chain	1		**4000**
48	204444510024		Chain	1		**3600**
49	941100800009		Pin	2		
50	535045020024		Chain Anchor	2		
51	940200500011		Sprocket Bearing	1		
52	940600500009		Washer	2		
53	940600500008		Washer	2		
54	535045010008		Pin	1		
55	910200400016		Screw	1		
56	910100300050		Bolt	1		
57	204444510003		Wheel Carrier	1		
58	201044510011		Cylinder	1		**3600**
58	204444510014		Cylinder	1		**4000**
58	204444510012		Cylinder	1		**4300**
58	201044510010		Cylinder	1		**4500**
58.01	201098510006		Seal Kit	1		
59	940200300004		Compound Roller	6		

Chapter 5: Steering System, Braking System, Wheels

01 Tiller Unit (204446011001)

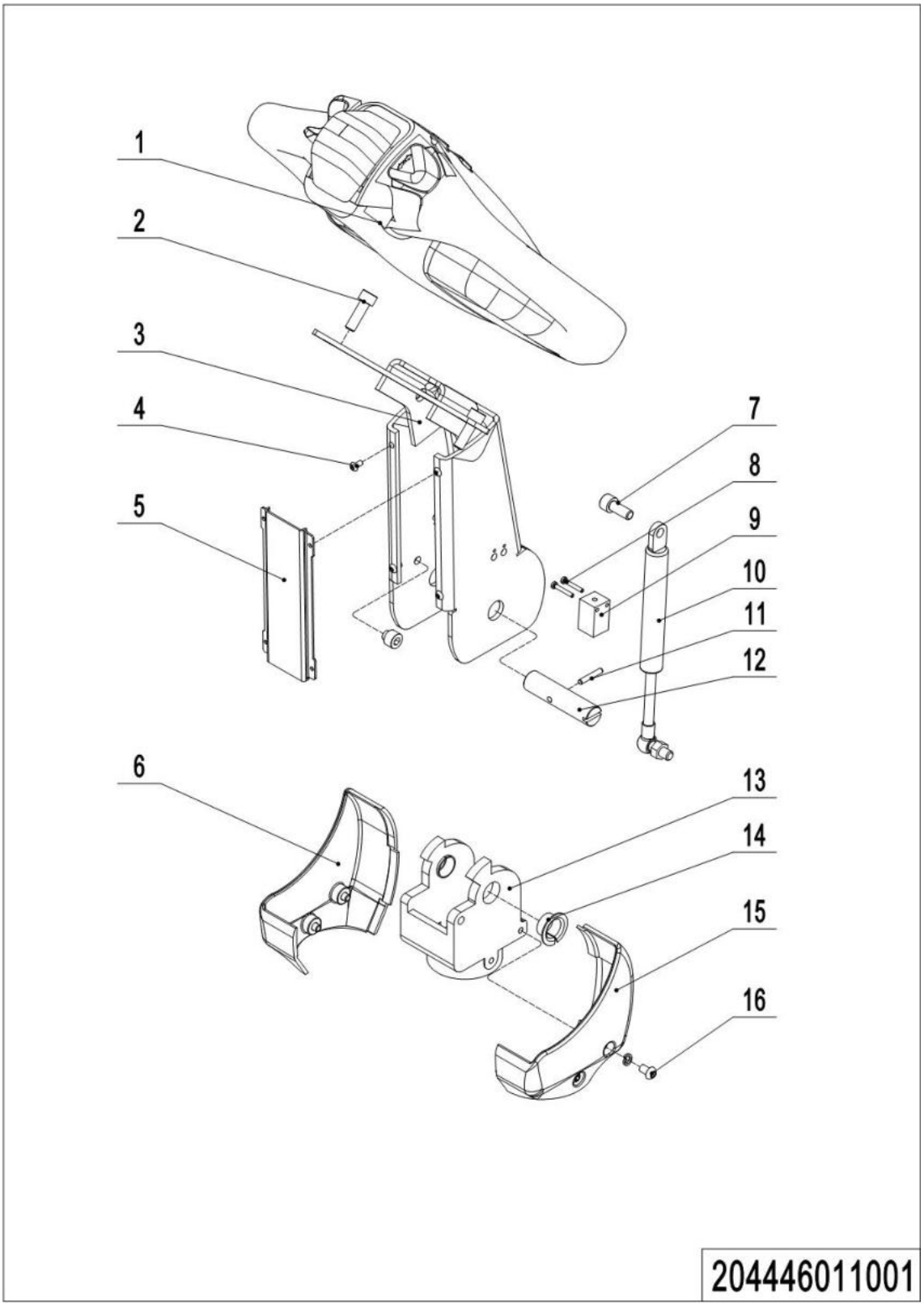

01 Tiller Unit (204446011001)

No.	Item Code	Mark	Item Description	Qty.	Substitute	Note
1	922100100036		Tiller	1		**See 204446011002**
1	922100100001		Tiller	1		**See 535946011002**
2	910200200058	1	Screw	2		
3	535911010000	2	Tiller	1		
3	535911010001	2	Tiller	1		**Short tiller**
4	910200300005	1	Screw	4		
5	535911020003		Close Plate	1		
5	535911020008		Close Plate	1		**Short tiller**
6	535911020005		Protective Cover	1		
7	910200200057	1	Screw	1		
8	910200500015	1	Screw	2		
9	506733510002		Proximity Switch	1		
10	940400100001		Air Spring	1		
10	940400100045		Air Spring	1		**Short tiller**
11	910600400013	1	Spring Pin	1		
12	505611020008		Axle	1		
13	535911020004		Bracket	1		
13	535911020009		Bracket	1		**Short tiller**
14	940500200002		Bushing	2		
15	535911020006		Protective Cover	1		
16	910200300016	1	Screw	4		

02 Control Handle (204446011002)

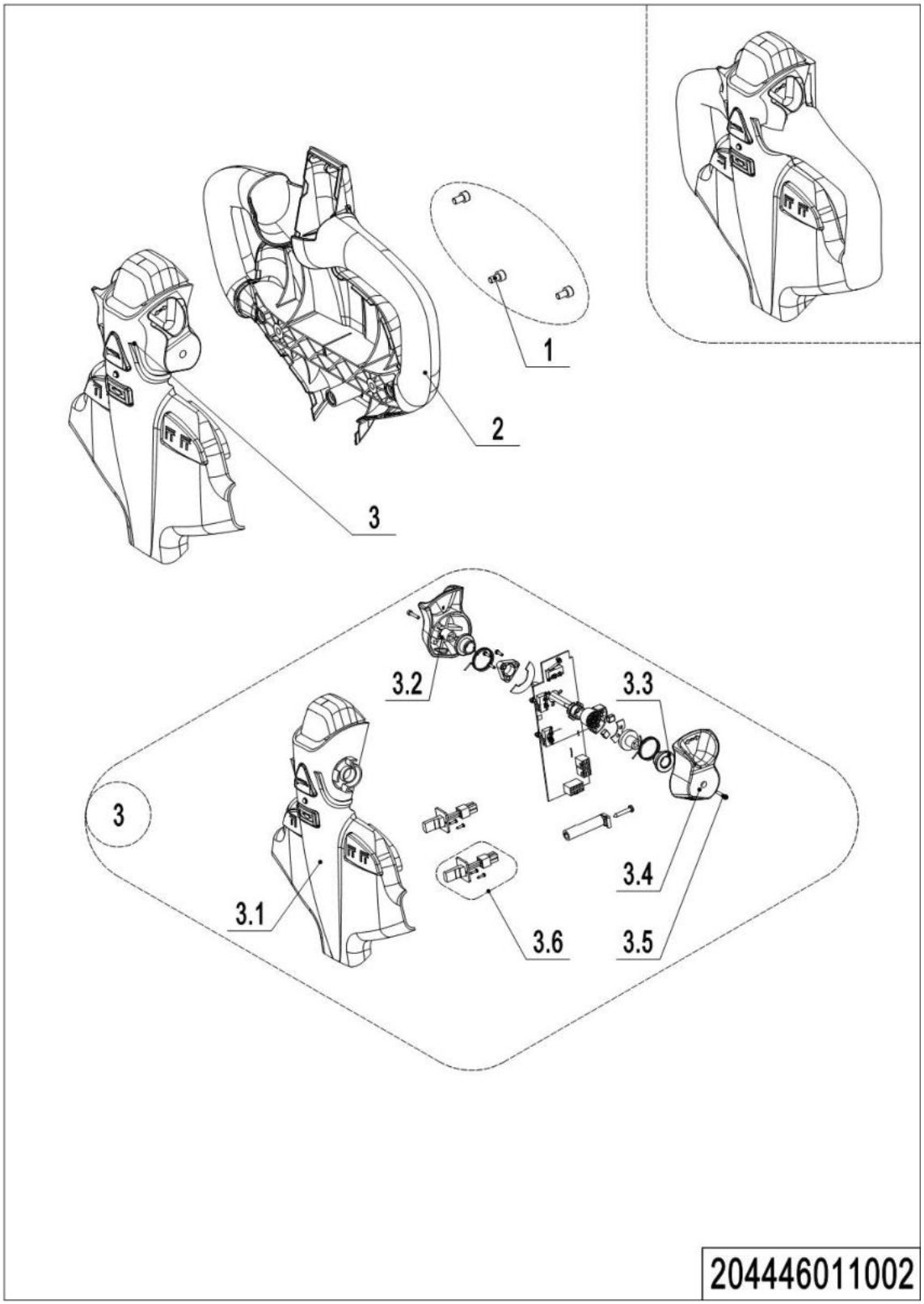

1= Supply as package. 2= Supply with constraints. 3= Phasing-out supply. 4= Supply as assembly. 5= Check other tables.

02 Control Handle (204446011002)

No.	Item Code	Mark	Item Description	Qty.	Substitute	Note
--	922100100036		Tiller	1		
1	910200200032	1	Screw	3		**M6×10**
2	505698520124	2	Handle Cap	1		
3	505698510024	2	Handle Cap Kit	1		
3.1	505698510021	2	Handle Cap Kit	1		**See 204446011003**
3.2	505698520121	2	Traction lever	1		
3.3	505698520122	2	Sleeve	2		
3.4	505698520123	2	Traction lever	1		
3.5	910200200004	1	Screw	2		**M3×16**
3.6	505698510022	2	Magnetic Steel Base Kit	1		

03 Handle Cap Kit (204446011003)

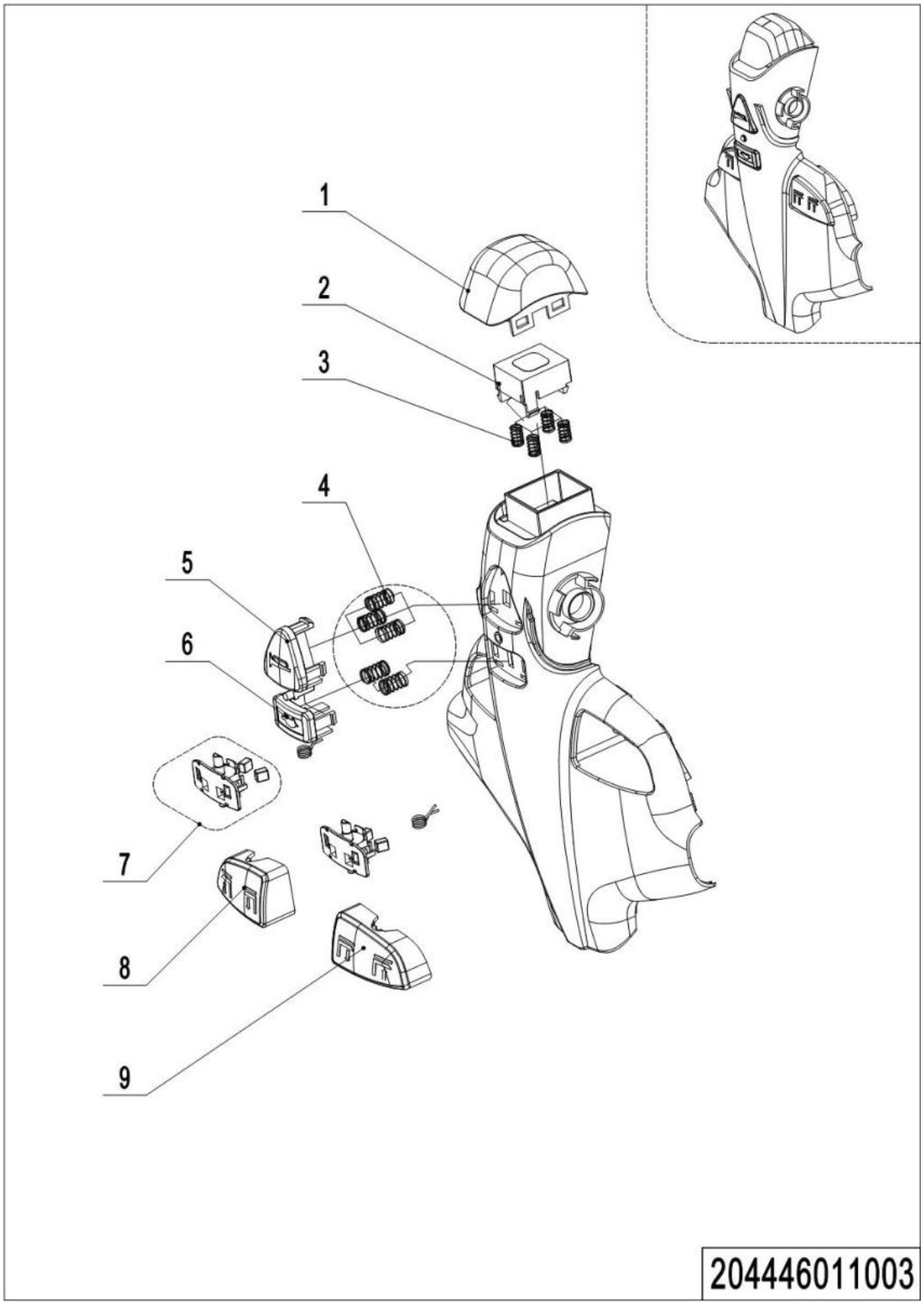

1= Supply as package. 2= Supply with constraints. 3= Phasing-out supply. 4= Supply as assembly. 5= Check other tables.

03 Handle Cap Kit (204446011003)

No.	Item Code	Mark	Item Description	Qty.	Substitute	Note
--	505698510021	2	Handle Cap Kit	1		**Include circuit board**
1	505698520120	2	Cover	1		
2	505698520119	2	Cover	1		
3	505698520118	2	Spring	4		
4	505698520117	2	Spring	5		
5	505698520116	2	Button	1		
6	505698520115	2	Button	1		
7	505698510023	2	Sensor	1		
8	505698520114	2	Button	1		
9	505698520113	2	Button	1		

04 Control Handle(REMA) (535946011002)

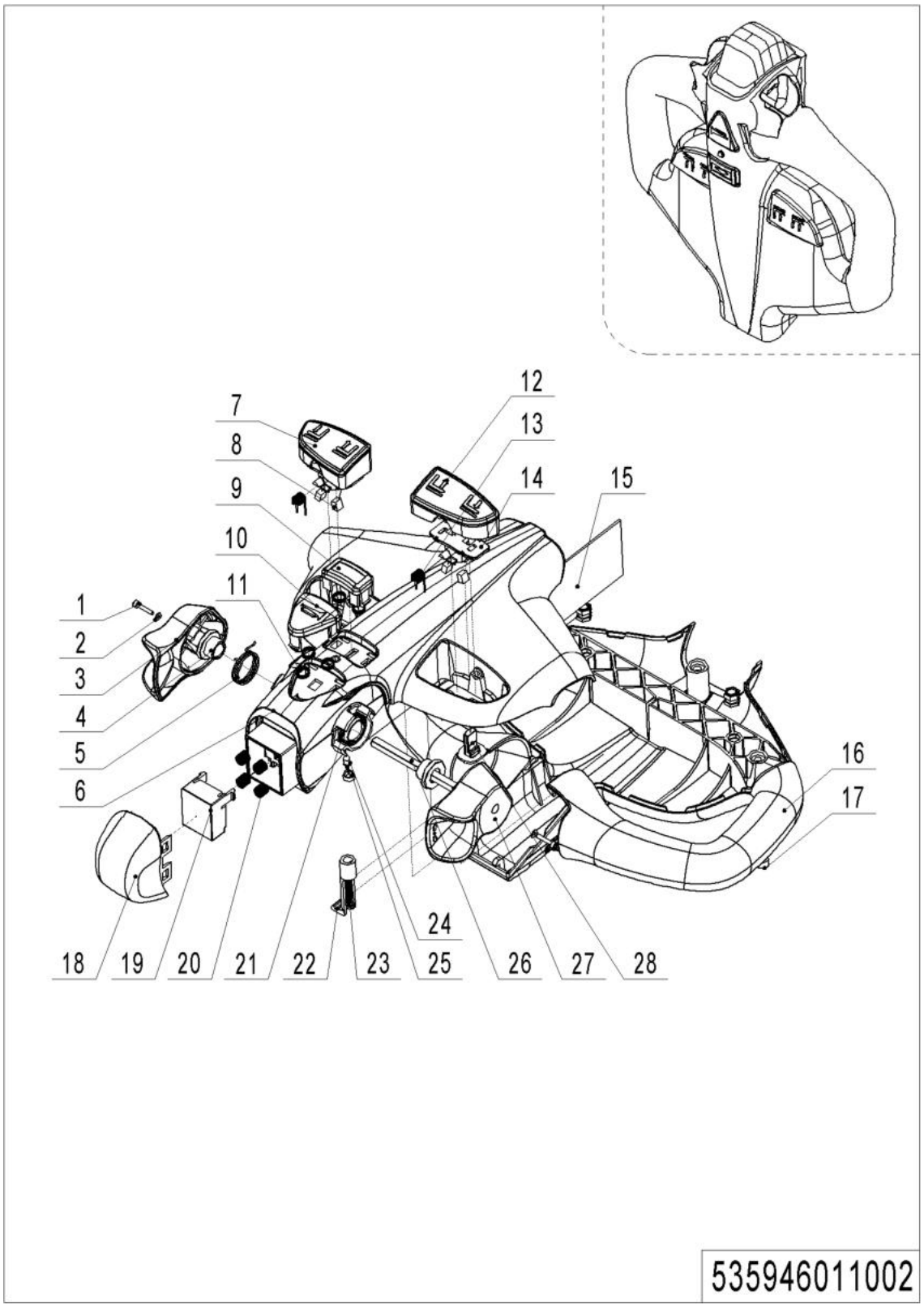

04 Control Handle(REMA) (535946011002)

No.	Item Code	Mark	Item Description	Qty.	Substitute	Note
--	922100100001		Tiller	1		
1	505698520008		Screw	2		
2	505698520009		Washer	2		
3	505698520001		Traction lever	1		
4	505698520004		Sleeve	2		
5	505698520027		Torsional Spring	1		
6	505698520014		Handle Cap	1		
7	505698520016		Button cap	1		
8	505698520005		Magnet	4		
9	505698520021		Button Cap	1		
10	505698520002		Horn Button	1		
11	505698520003		Spring	5		
12	505698520022		Button Cap	1		
13	505698520018		Torsional Spring	2		
14	505698520017		Fixing Base	2		
15	505698520028		circuit Board	1		
16	505698520015		Handle Cap	1		
17	505698520007		Screw	3		
18	505698520020		Button Cap-	1		
19	505698520019		Pedestal	1		
20	505698520006		Spring	4		
21	505698520026		Torsional Spring	1		
22	505698520012		Clamp	1		
23	505698520023		Screw	1		
24	505698520024		Light	1		
25	505698520025		Lamp Holder	1		
26	505698520011		Axle-Traction lever	1		

1= Supply as package. 2= Supply with constraints. 3= Phasing-out supply. 4= Supply as assembly. 5= Check other tables.

27	505698520010		Traction lever	1		
28	505698520013		Sensor	2		

05 Load Wheel (202046017001)

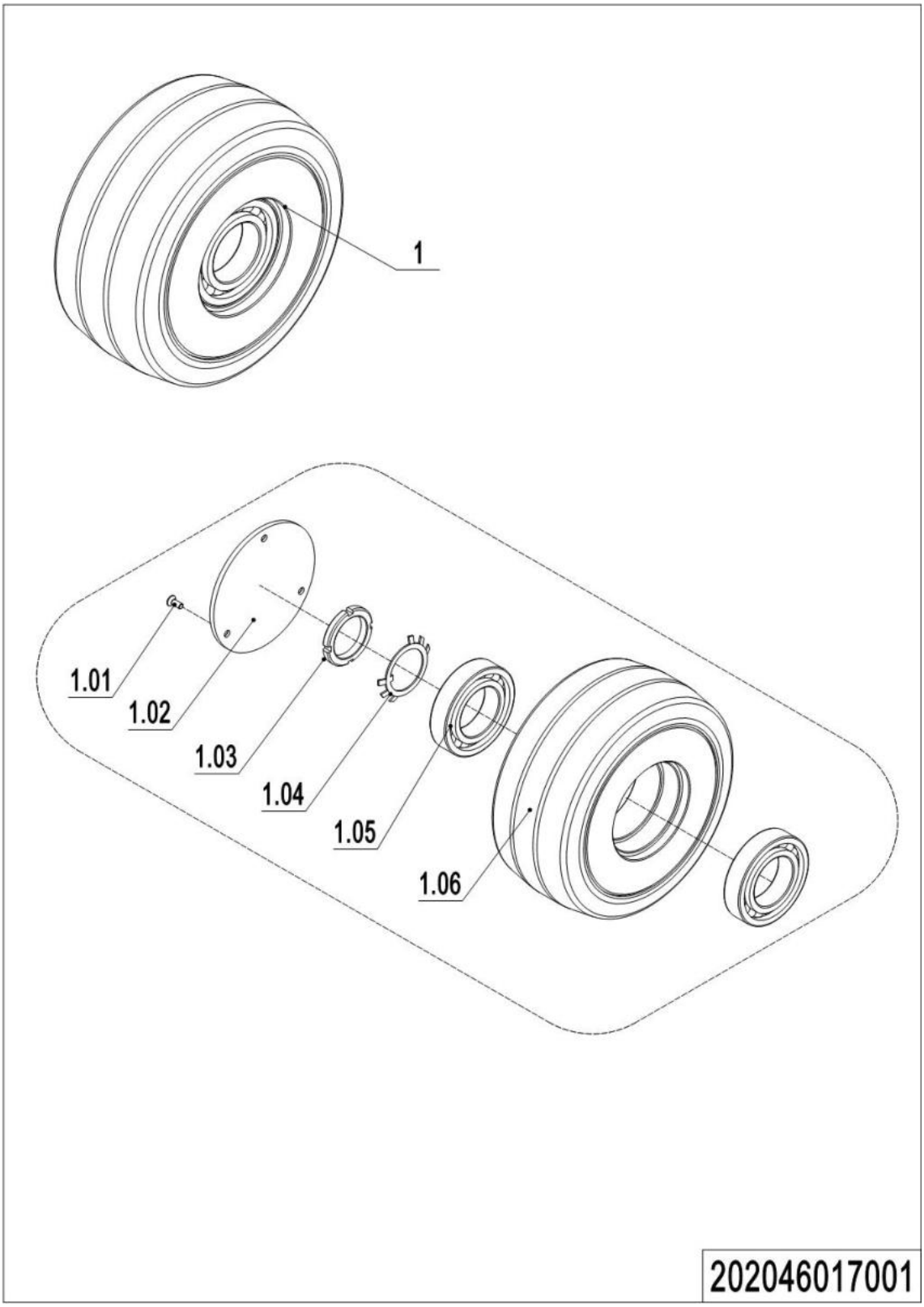

05 Load Wheel (202046017001)

No.	Item Code	Mark	Item Description	Qty.	Substitute	Note
1	202098510000		Wheel Assembly	1		
1.01	910200400016		Screw	3		
1.02	201017020000		End Cap	1		
1.03	910300700003		Nut	1		
1.04	910400900010		Lock Washer	1		
1.05	910700200025		Bearing	2		
1.06	940300300025		WheelΦ230x100	1		

Chapter 6: Electrical Parts

01 Display Assembly (204446010001)

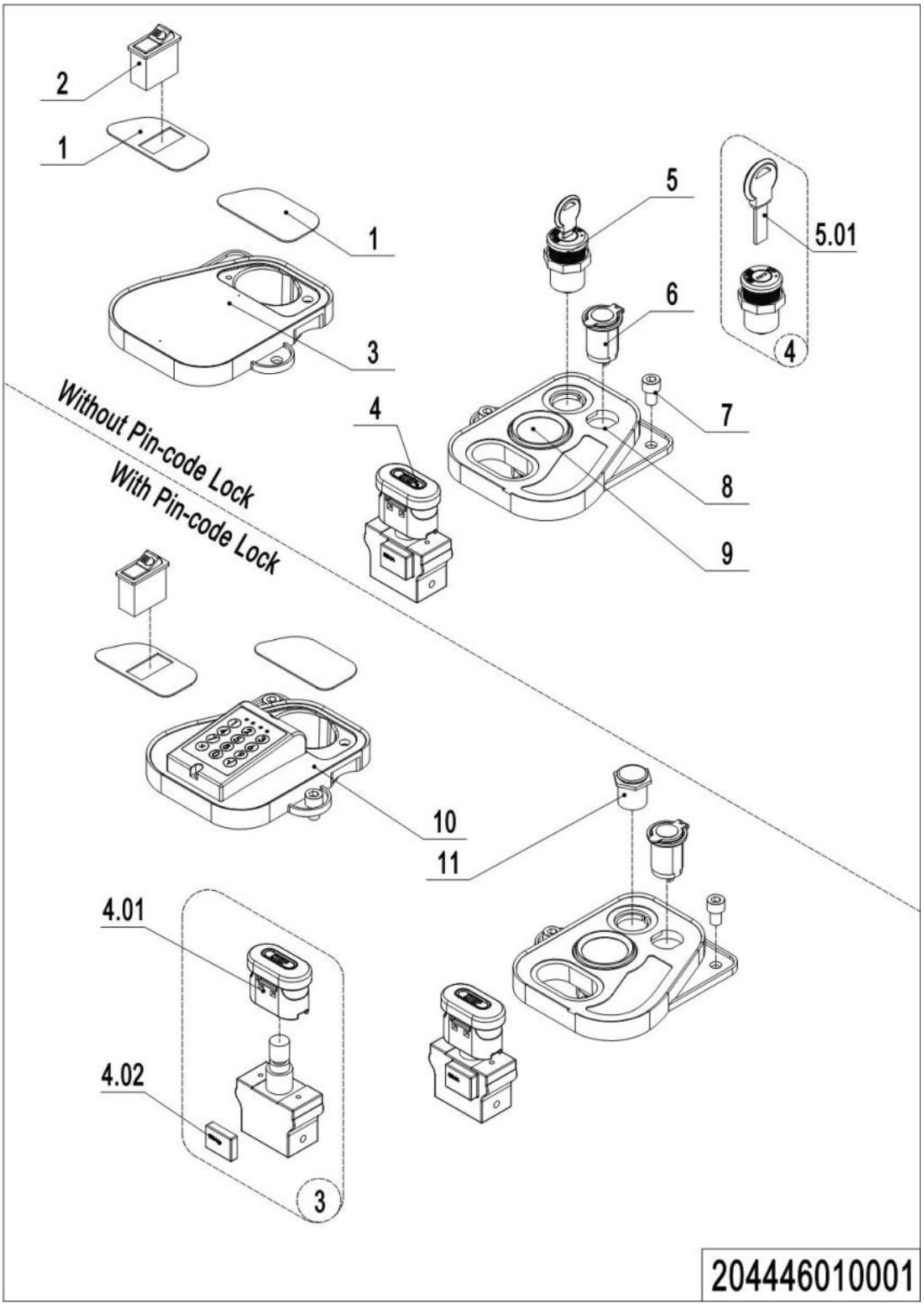

01 Display Assembly (204446010001)

No.	Item Code	Mark	Item Description	Qty.	Substitute	Note
1	535910020003		Close Plate	1		
1	204410020000		Close Plate	1		**Equipped with lights**
2	920200800009		Rocker Switch	1		**Equipped with lights**
3	535910020002		Bezel	1		
4	920200100009		Emergency Button	1		
4.01	920200100010		Emergency Button	1		
4.02	920200100012		Emergency Button	1		
5	505634010000		Key Switch	1		
5.01	920200200001		Key Switch	1		
6	206033010036		USB interface	1		
7	910200200074	1	Screw	4		
8	535910020001		Bezel	1		
9	921100100012		Display	1		
10	920200200014		Pin-code Lock	1		
11	506734010000		Button	1		

02 Wire Harness (204446033001)

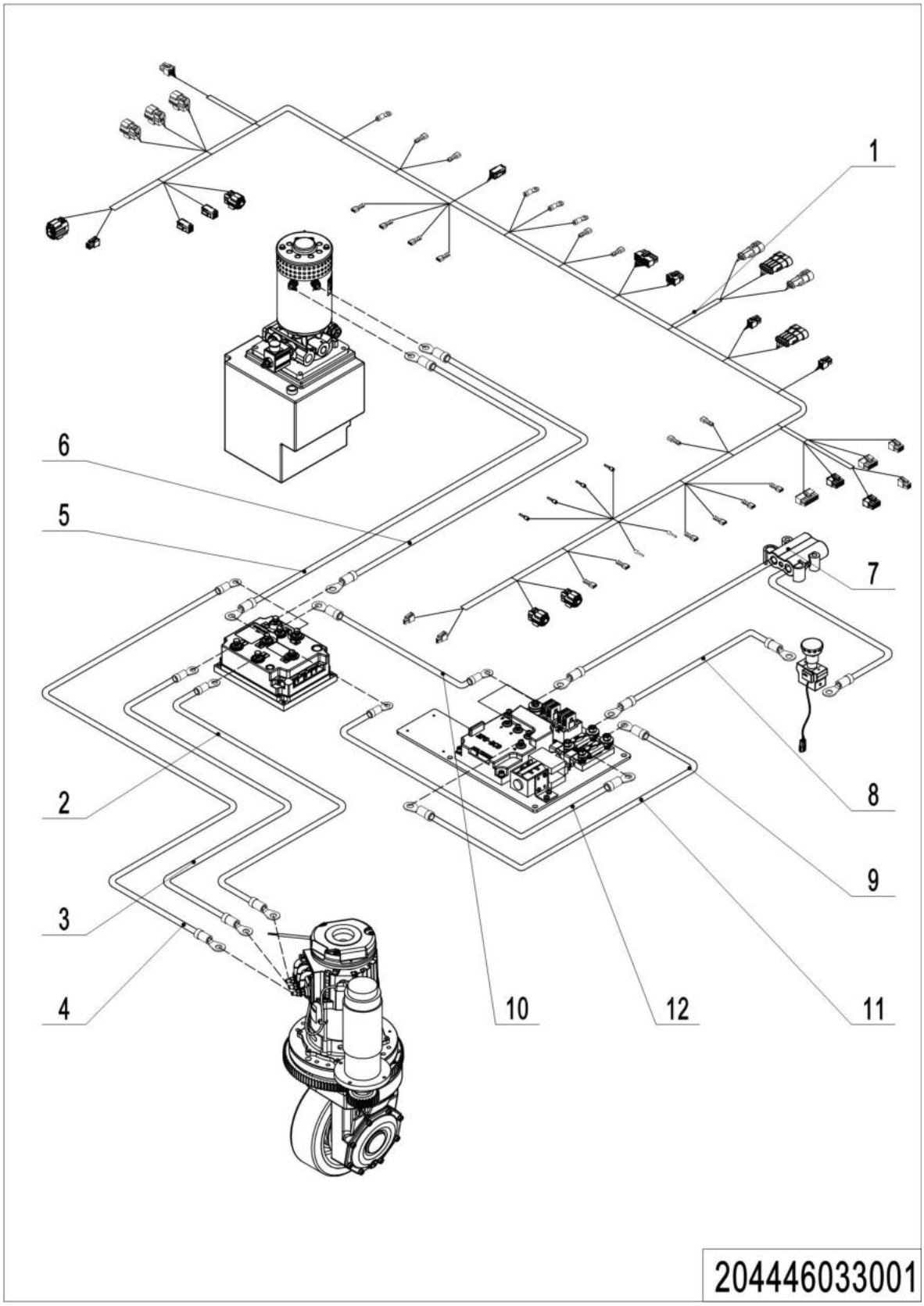

1= Supply as package. 2= Supply with constraints. 3= Phasing-out supply. 4= Supply as assembly. 5= Check other tables.

02 Wire Harness (204446033001)

No.	Item Code	Mark	Item Description	Qty.	Substitute	Note
1	204433010000	2	Wire Harness	1		
2	204433010004	2	Cable	1		
3	204433010005	2	Cable	1		
4	204433010006	2	Cable	1		
5	204433010007	2	Cable	1		
6	204433010008	2	Cable	1		
7	204433010009	2	Wire Harness	1		
8	204433010010	2	Cable	1		
9	204433010011	2	Cable	1		
10	204433010012	2	Cable	1		
11	204433010013	2	Cables	1		
12	204433010014	2	Cables	1		

03 Wire Harness(equipped with lights)(204446033002)

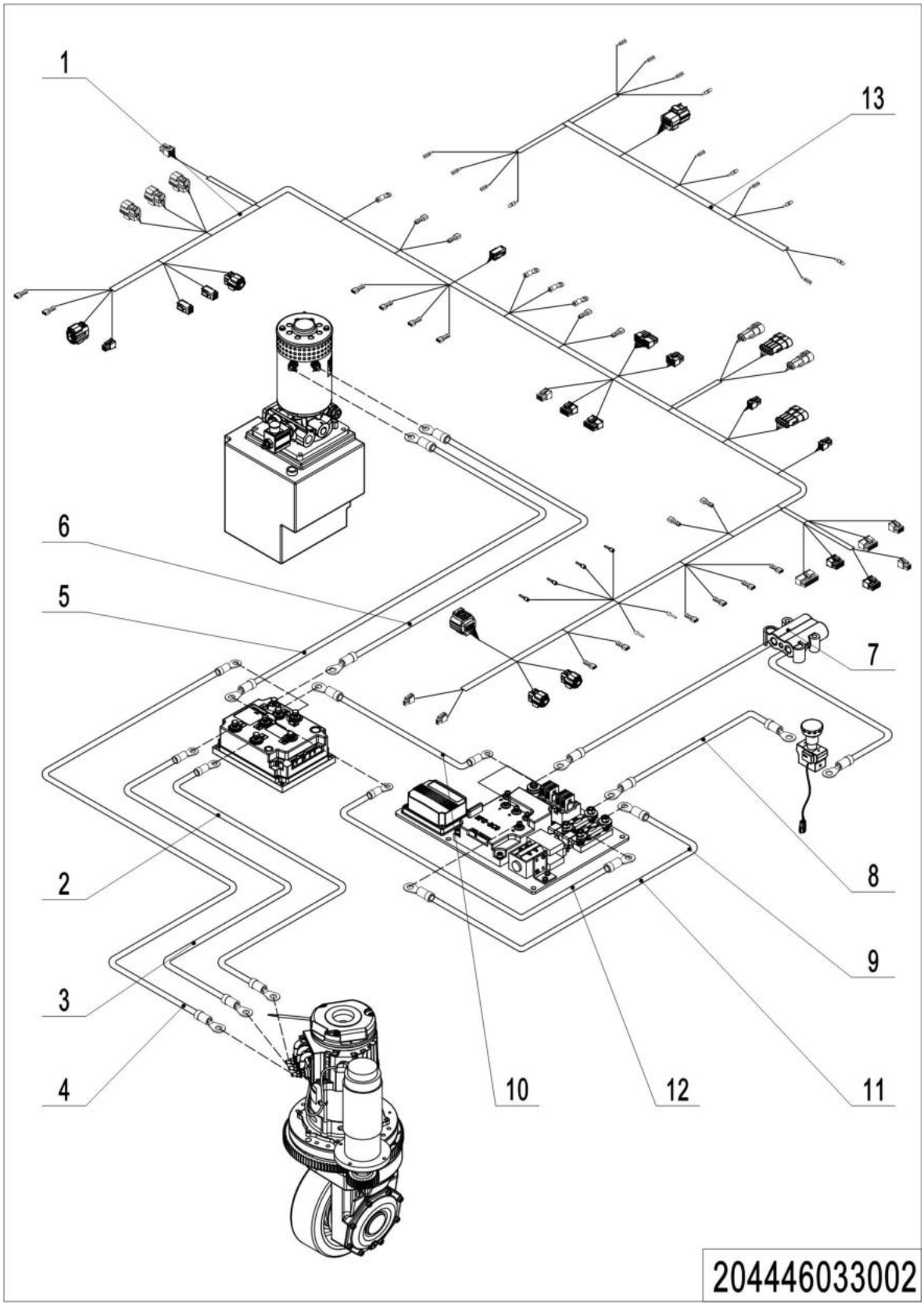

1= Supply as package. 2= Supply with constraints. 3= Phasing-out supply. 4= Supply as assembly. 5= Check other tables.

03 Wire Harness(equipped with lights) (204446033002)

No.	Item Code	Mark	Item Description	Qty.	Substitute	Note
1	204433010000	2	Wire Harness	1		
2	204433010004	2	Cable	1		
3	204433010005	2	Cable	1		
4	204433010006	2	Cable	1		
5	204433010007	2	Cable	1		
6	204433010008	2	Cable	1		
7	204433010009	2	Wire Harness	1		
8	204433010010	2	Cable	1		
9	204433010011	2	Cable	1		
10	204433010012	2	Cable	1		
11	204433010013	2	Cables	1		
12	204433010014	2	Cables	1		
13	204433010003	2	Wire Harness	1		

04 Electronic Components (204446033003)

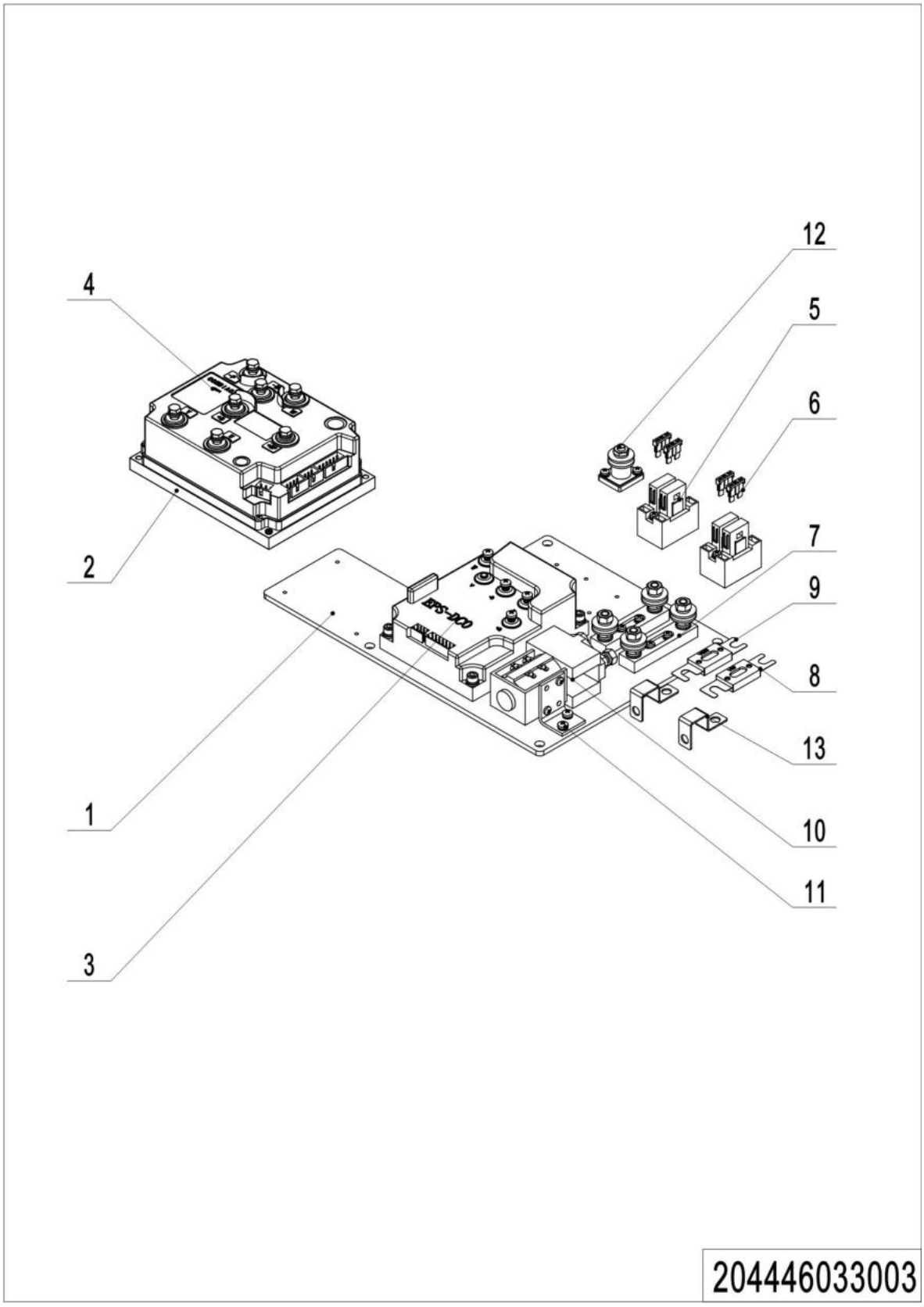

1= Supply as package. 2= Supply with constraints. 3= Phasing-out supply. 4= Supply as assembly. 5= Check other tables.

04 Electronic Components (204446033003)

No.	Item Code	Mark	Item Description	Qty.	Substitute	Note
1	204433020000	2	Mounting Plate	1		
2	534733020000	1	Plate	1		
3	921400100030	1	Controller	1		
4	921400100048	1	Controller	1		
5	920100400005	1	Fuse Holder	2		
6	920100200002	1	Fuse	4		
7	920100400002	1	Fuse Holder	2		
8	920100100013	1	Fuse	1		
9	920100100003	1	Fuse	1		
10	920700100002	1	Contactor	1		
11	921300400005	1	Holder	1		
12	920100400001	1	Fuse Holder	1		
13	565933020001	1	Copper Busbar	1		

1= Supply as package. 2= Supply with constraints. 3= Phasing-out supply. 4= Supply as assembly. 5= Check other tables.

05 Electronic Components(equipped with lights) (204446033004)

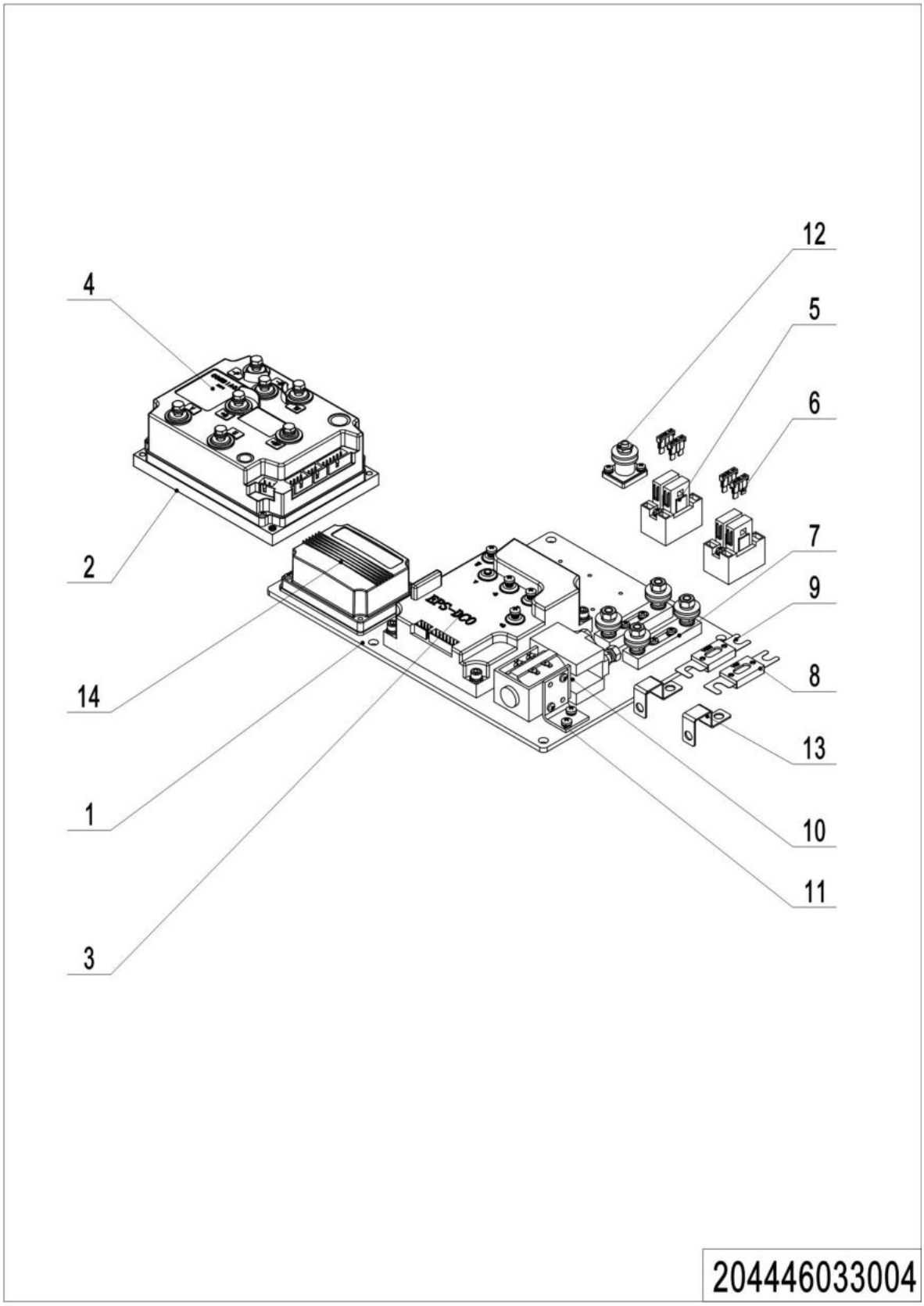

1= Supply as package. 2= Supply with constraints. 3= Phasing-out supply. 4= Supply as assembly. 5= Check other tables.

05 Electronic Components(equipped with lights) (204446033004)

No.	Item Code	Mark	Item Description	Qty.	Substitute	Note
1	204433020000	2	Mounting Plate	1		
2	534733020000	1	Plate	1		
3	921400100030	1	Controller	1		
4	921400100048	1	Controller	1		
5	920100400005	1	Fuse Holder	2		
6	920100200002	1	Fuse	4		
7	920100400002	1	Fuse Holder	2		
8	920100100013	1	Fuse	1		
9	920100100003	1	Fuse	1		
10	920700100002	1	Contactor	1		
11	921300400005	1	Holder	1		
12	920100400001	1	Fuse Holder	1		
13	565933020001	1	Copper Busbar	1		
14	921200100011	1	Module FC2127-SCH.HVC	1		

06 Charger (204446036501)

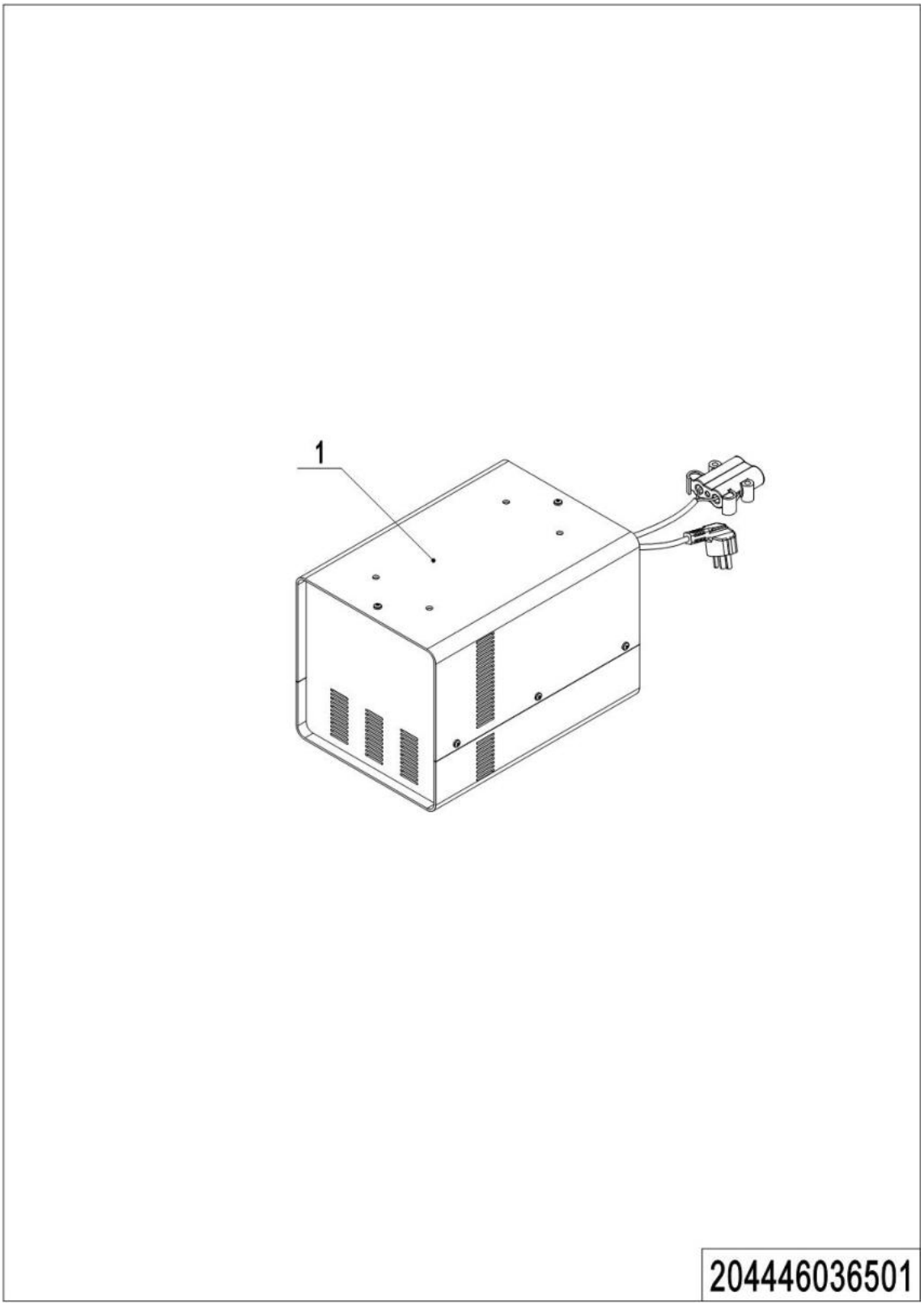

1= Supply as package. 2= Supply with constraints. 3= Phasing-out supply. 4= Supply as assembly. 5= Check other tables.

06 Charger (204446036501)

No.	Item Code	Mark	Item Description	Qty.	Substitute	Note
1	921000200183		Charger24V35A(Aisa-CHN)	1		
1	921000200184		Charger24V35A(Aisa-ENG)	1		
1	921000200185		Charger24V35A(EU)	1		
1	921000200186		Charger24V35A(ENG)	1		
1	921000200187		Charger24V35A(AUS)	1		
1	921000200188		Charger24V35A(USA)	1		
1	921000200365		Charger24V35A(ISR)	1		
1	921000200284		Charger24V35A(Aisa-CHN)	1		
1	921000200290		Charger24V35A(Aisa-ENG)	1		
1	921000200294		Charger24V35A(EU)	1		
1	921000200302		Charger24V35A(AUS)	1		
1	921000200298		Charger24V35A(ENG)	1		
1	921000200306		Charger24V35A(USA)	1		
1	921000200366		Charger24V35A(ISR)	1		
1	921000200019		Charger24V45A(Aisa-CHN)	1		
1	921000200020		Charger24V45A(Aisa-ENG)	1		
1	921000200021		Charger24V45A(EU)	1		
1	921000200022		Charger24V45A(AUS)	1		
1	921000200023		Charger24V45A(ENG)	1		
1	921000200024		Charger24V45A(USA)	1		

07 Traction Battery (204446037001)

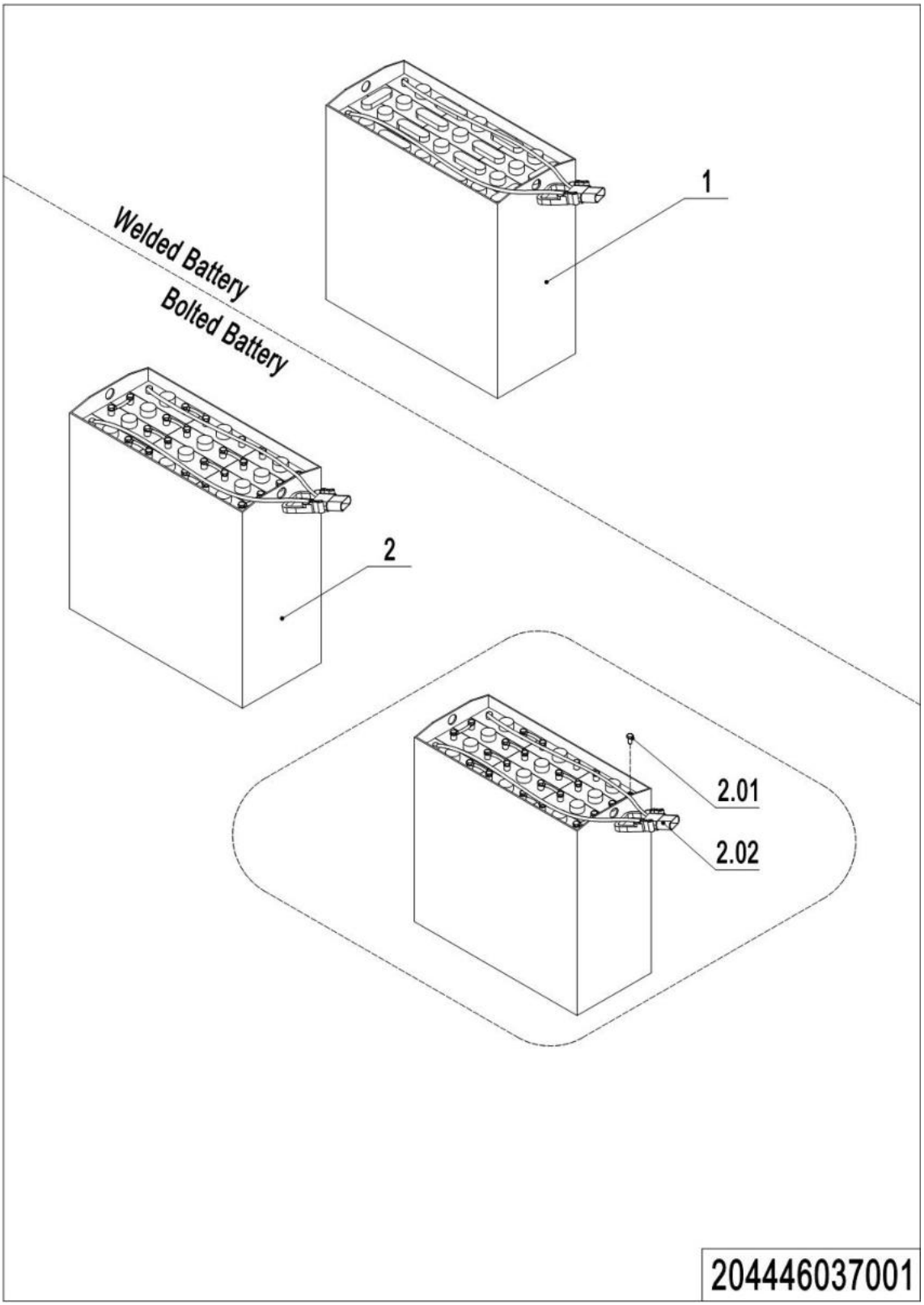

07 Traction Battery (204446037001)

No.	Item Code	Mark	Item Description	Qty.	Substitute	Note
1	532937010001		Battery24V270Ah(welded)	1		**For PSCB 12/16**
1	532637010002		Battery24V350Ah(welded)	1		**For PSCB 18**
2	532937010002		Battery24V270Ah	1		**For PSCB 12/16**
2	532637010003		Battery24V350Ah	1		**For PSCB 18**
2.01	505698520000		Bolt	24		
2.02	505698510001		Connector	1		**For all battery**

Chapter 7: Special Parts

01 Load Backrest (216546040501)

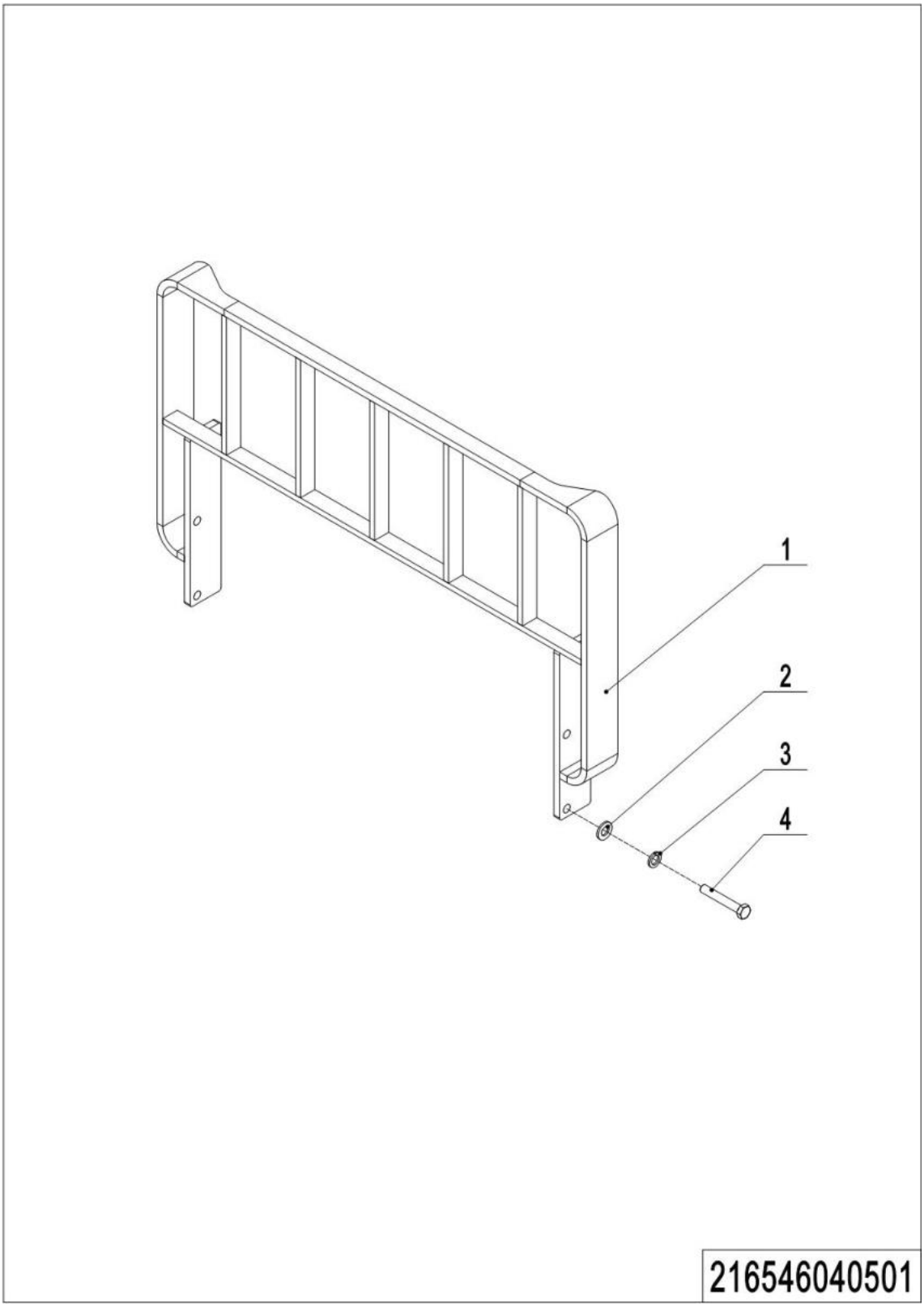

1= Supply as package. 2= Supply with constraints. 3= Phasing-out supply. 4= Supply as assembly. 5= Check other tables.

01 Load Backrest (216546040501)

No.	Item Code	Mark	Item Description	Qty.	Substitute	Note
1	216540510000		Load Backrest	1		
2	910400100008		Flat Washer	4		
3	910400500008		Spring Washer	4		
4	910100300050		Bolt	4		

02 Lights (204446035501)

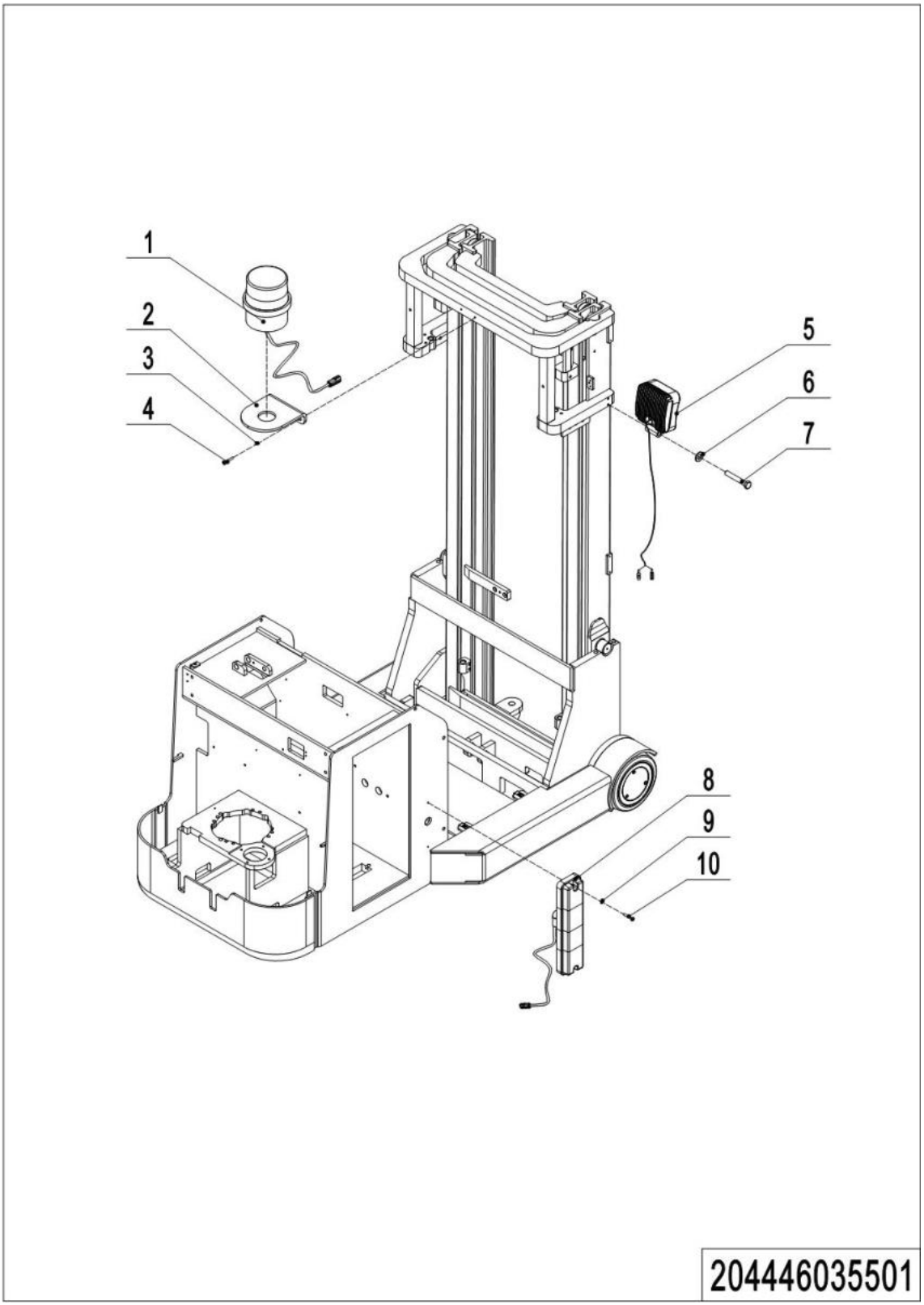

1= Supply as package. 2= Supply with constraints. 3= Phasing-out supply. 4= Supply as assembly. 5= Check other tables.

02 Lights (204446035501)

No.	Item Code	Mark	Item Description	Qty.	Substitute	Note
1	213098510009		Caution light	1		
2	204433520000		Mounting Plate	1		
3	910400100005		Flat Washer	2		
4	910200300016		Screw	2		
5	922000100001		Lamp	2		
6	910400100006		Flat Washer	2		
7	910100100023		Bolt	2		
8	922000100003		Lamp	2		
9	910400500004		Spring Washer	4		
10	910200500042		Screw	4		

Chapter 8: Others

01 Label and Decal (US) (204446047001)

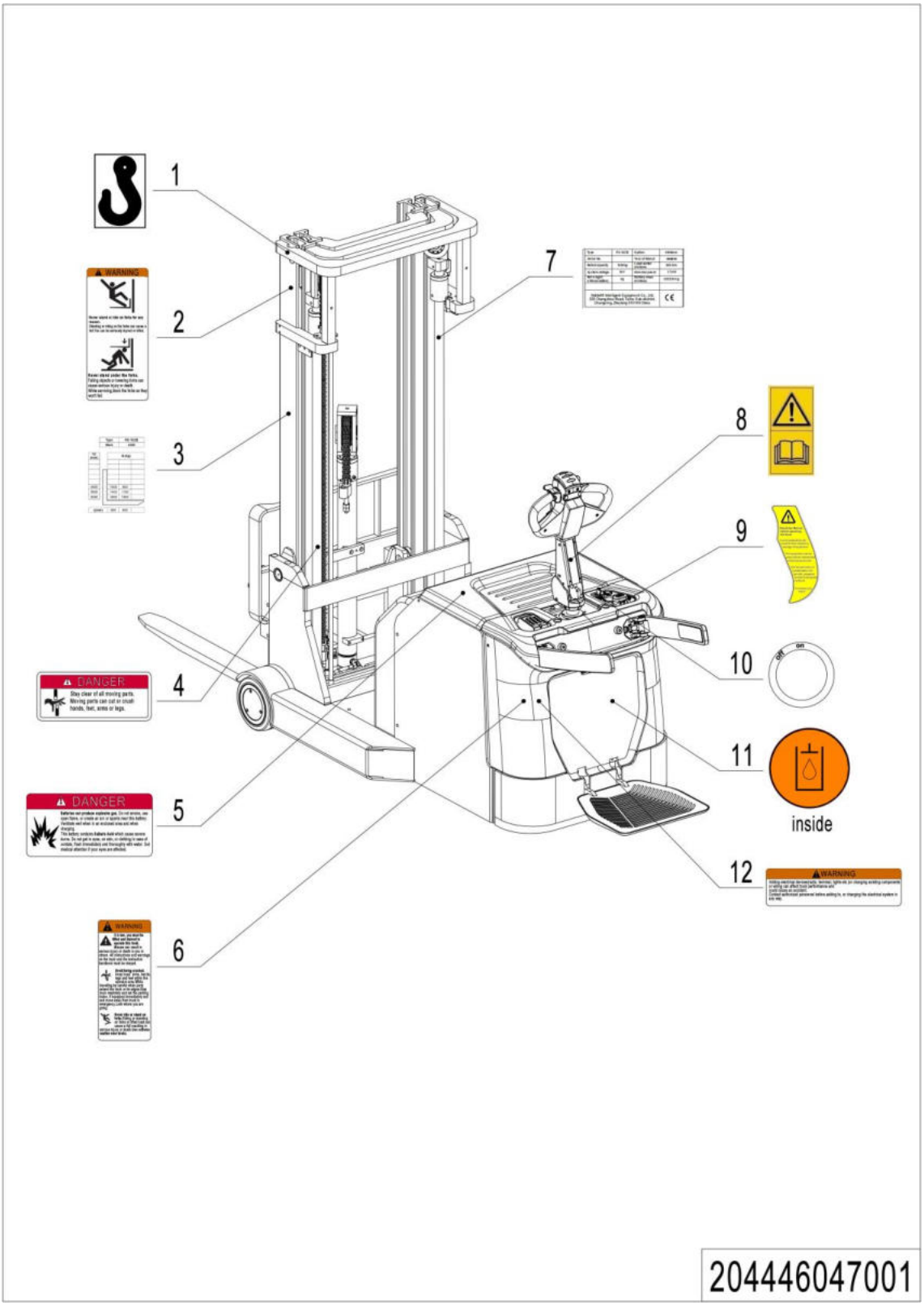

01 Label and Decal (US) (204446047001)

No.	Item Code	Mark	Item Description	Qty.	Substitute	Note
1	941200300001		Label	2		
2	941200100016		Label	2		
3	204447520000		Load Capacity Diagram	1		
4	941200100014		Label	1		
5	941200100013		Label	1		
6	941200100009		Label	1		
7	204447020000		Truck data plate	1		
8	941200300002		Label	1		
9	941200300018		Label	1		
10	941200400013		Label	1		
11	941200300003		Label	1		
12	941200100010		Label	1		

02 Label and Decal (EU) (204446047002)

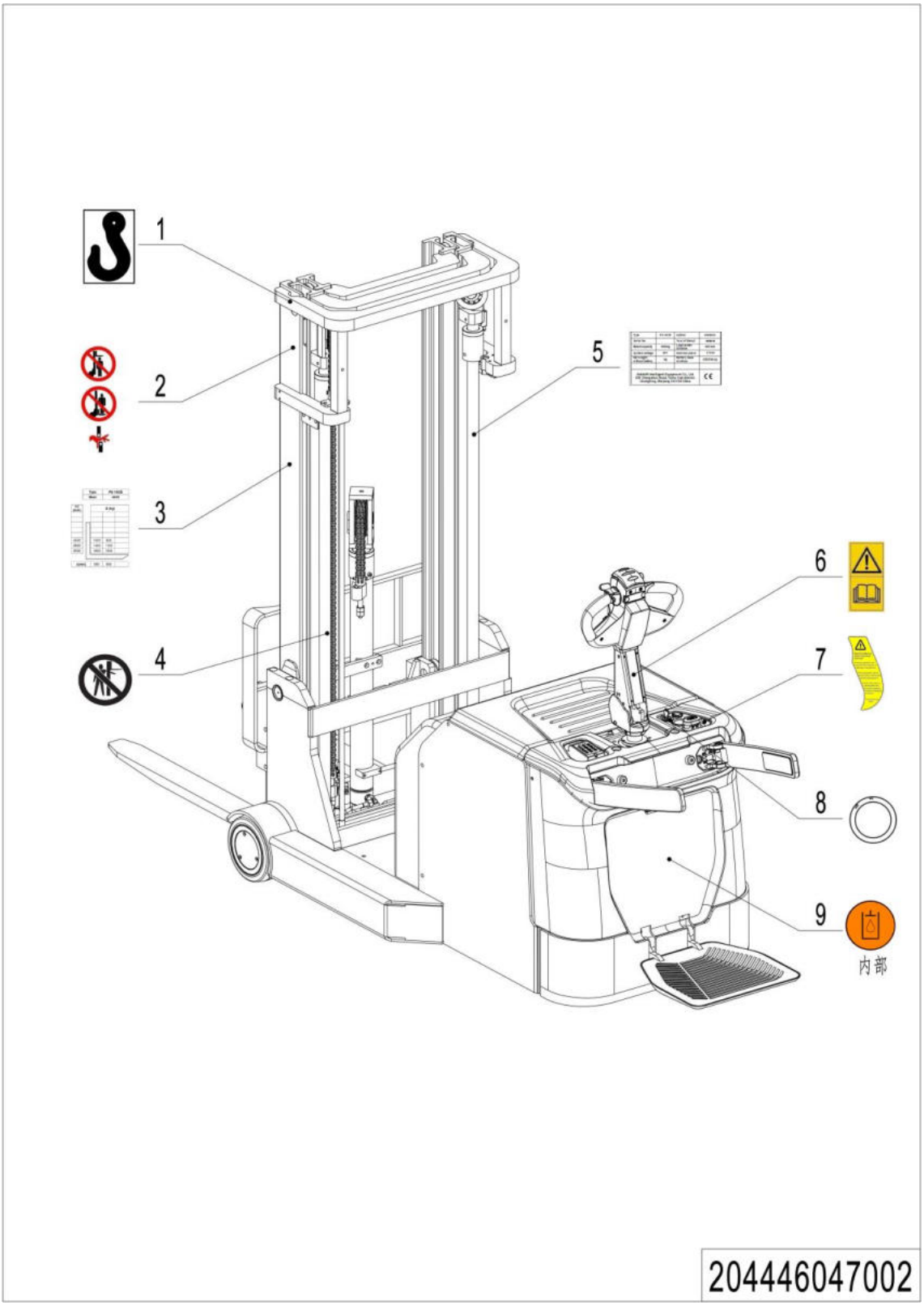

1= Supply as package. 2= Supply with constraints. 3= Phasing-out supply. 4= Supply as assembly. 5= Check other tables.

02 Label and Decal (EU) (204446047002)

No.	Item Code	Mark	Item Description	Qty.	Substitute	Note
1	941200300001		Label	2		
2	941200100004		Label	2		
3	204447520000		Load Capacity Diagram	1		
4	941200100006		Label	1		
5	204447020000		Truck data plate	1		
6	941200300002		Label	1		
7	941200300018		Label	1		
8	941200400013		Label	1		
9	941200300003		Label	1		

Appendix

01 Electrical Circuit Diagram

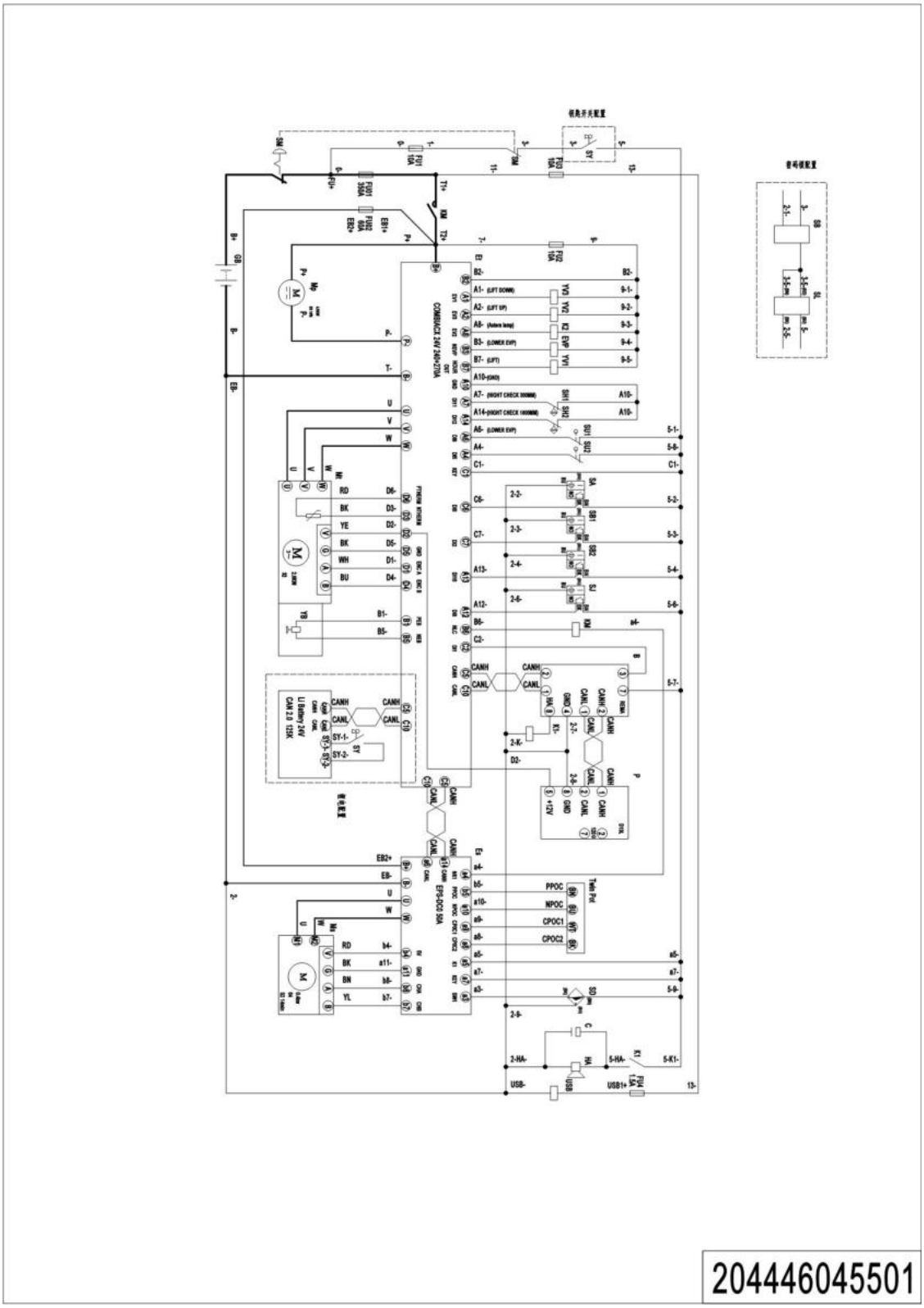

02 Electrical Circuit Diagram(equipped with lights)

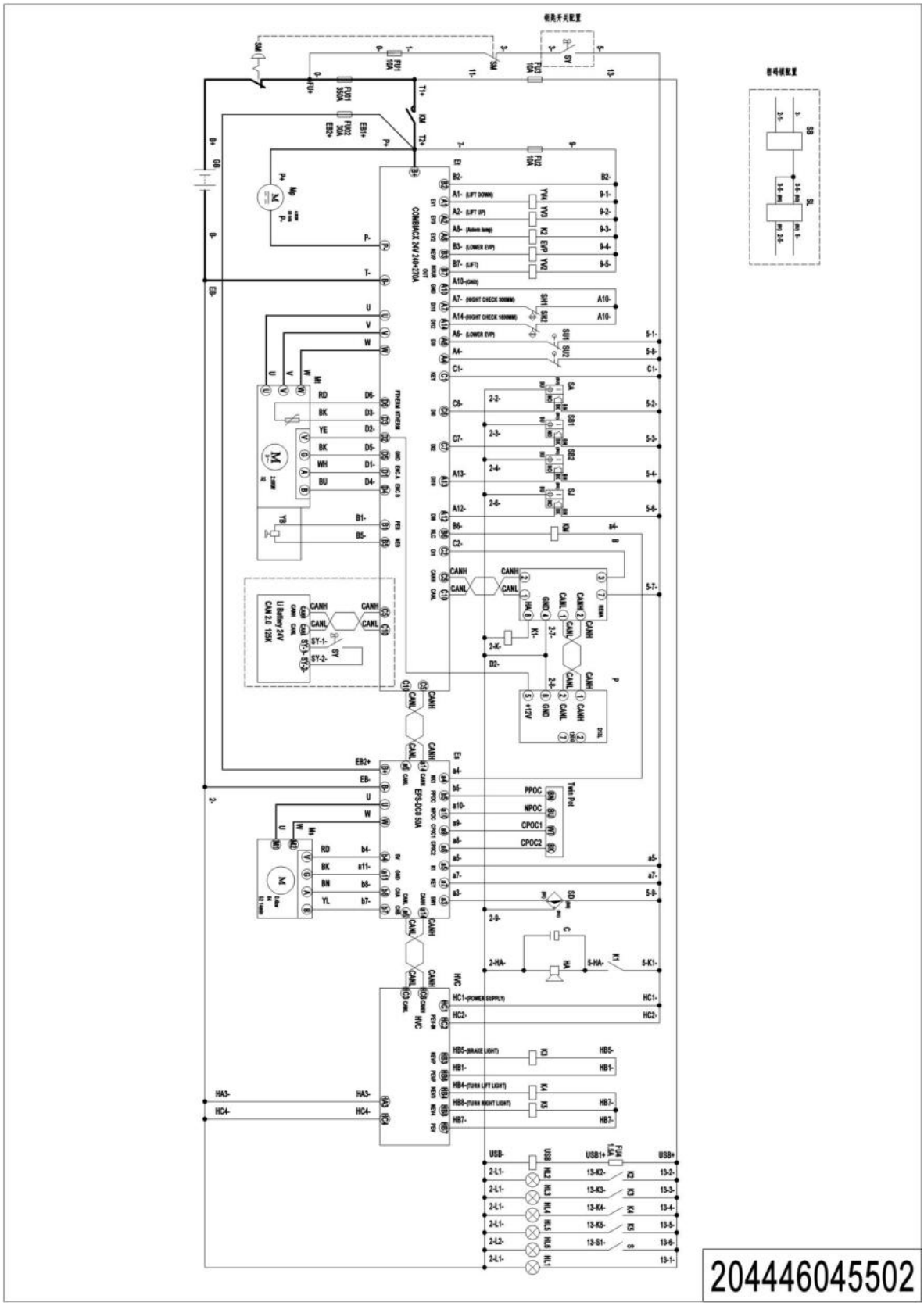

03 Hydraulic Circuit Diagram (VIBO)

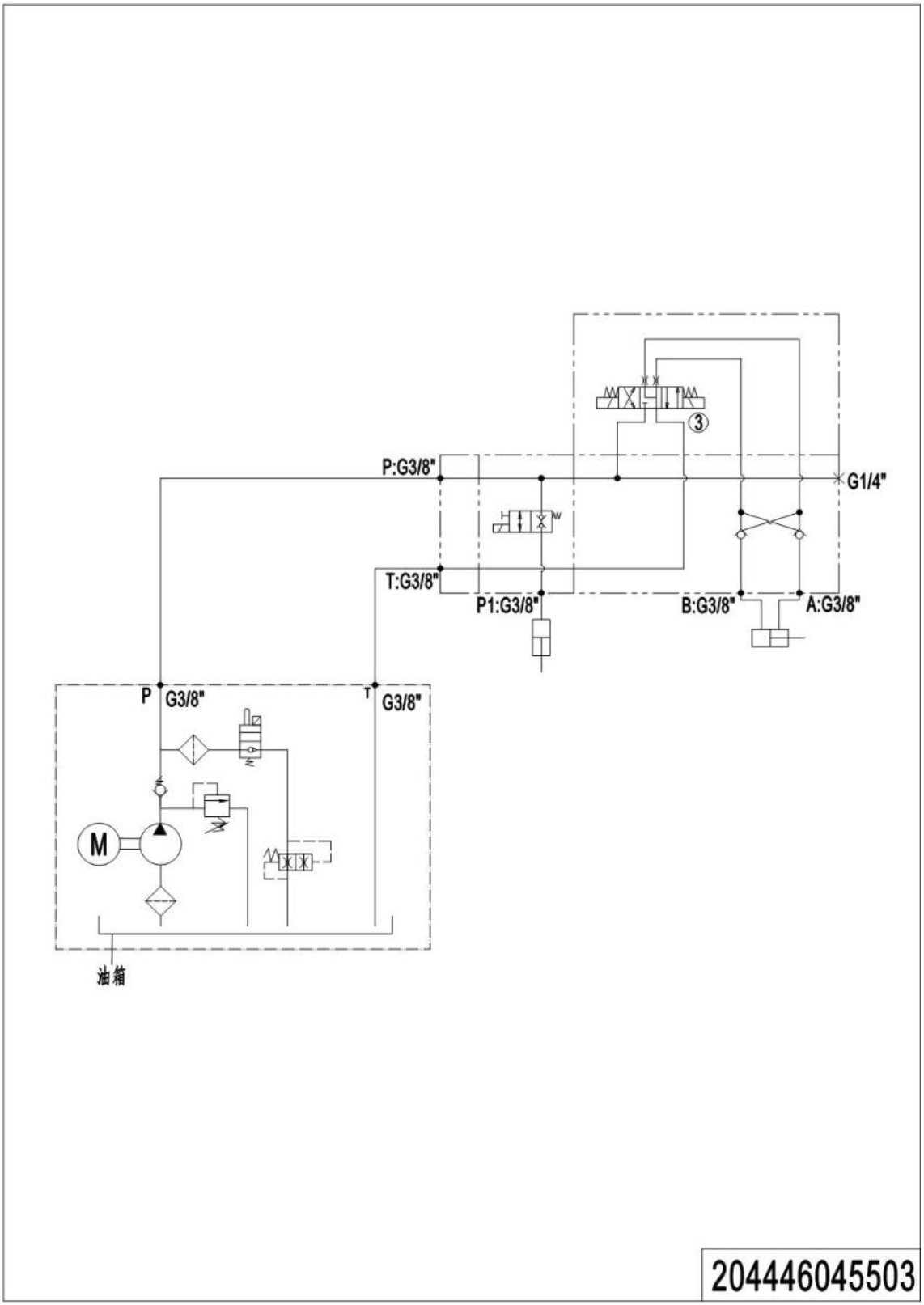

04 Hydraulic Circuit Diagram (HPI)

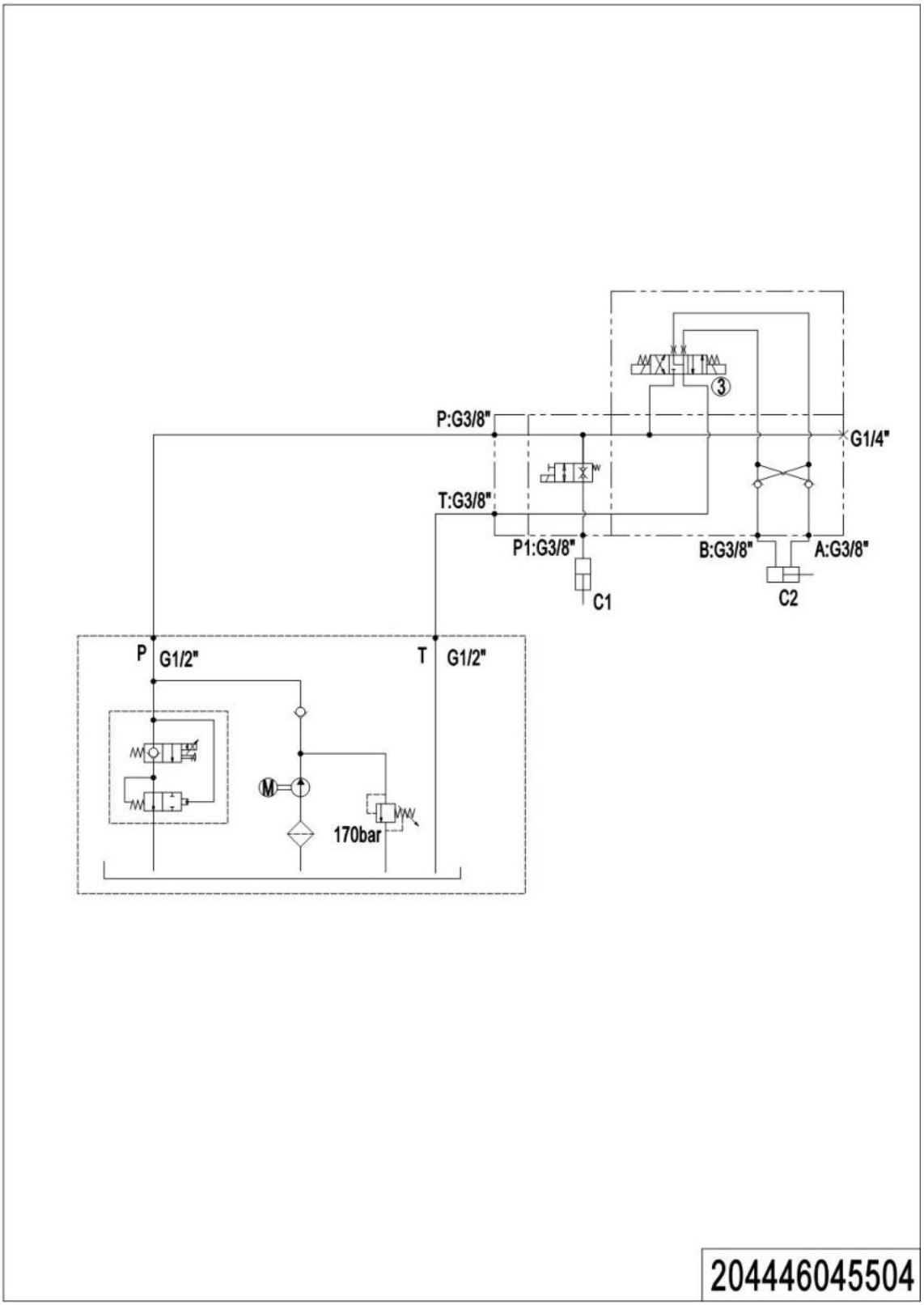

05 Consumable Parts List

No.	Item Code	Item Description	Qty.	Chapter/ Section/ Number
1	920200400007	Proximity Switch	1	Chapter 1/01/26
2	204498510000	Seal Kit	1	Chapter 2/01/22.01
3	534798520026	Carbon Brush	1	Chapter 2/02/2
4	940500200008	Bushing	2	Chapter 3/01/18
5	920200300003	Microswitch	1	Chapter 3/01/26
6	940500200003	Bushing	2	Chapter 3/03/2
7	535933510001	Proximity Switch	1	Chapter 3/03/7
8	535933510000	Proximity Switch	1	Chapter 3/03/21
9	940500200008	Bushing	2	Chapter 3/04/5
10	535933510002	Proximity Switch	1	Chapter 3/04/15
11	940200300004	Compound Roller	16	Chapter 3/05/3Chapter 4/02/12Chapter 4/03/59
12	201098510006	Seal Kit	1	Chapter 4/01/20.01
13	920200300001	Microswitch	3	Chapter 4/01/31Chapter 4/02/10Chapter 4/03/14
14	201098510005	Seal Kit	1	Chapter 4/02/6.01
15	940200300007	Compound Roller	4	Chapter 4/02/31Chapter 4/03/45
16	201098510005	Seal Kit	1	Chapter 4/03/6.01
17	201098510006	Seal Kit	1	Chapter 4/03/58.01
18	506733510002	Proximity Switch	1	Chapter 5/01/12
19	940500200002	Bushing	2	Chapter 5/01/17
20	910700200025	Bearing	2	Chapter 5/05/1.05
21	940300300025	WheelΦ230x100	1	Chapter 5/05/1.06
22	920200100012	Emergency Button	1	Chapter 6/01/4.02
23	920100200002	Fuse	8	Chapter 6/04/6Chapter 6/05/6
24	920100100013	Fuse	2	Chapter 6/04/8Chapter 6/05/8
25	920100100003	Fuse	2	Chapter 6/04/9Chapter 6/05/9

1= Supply as package. 2= Supply with constraints. 3= Phasing-out supply. 4= Supply as assembly. 5= Check other tables.