Print Number: Print Date:

NOBLELIFT

Scan QR Code for More

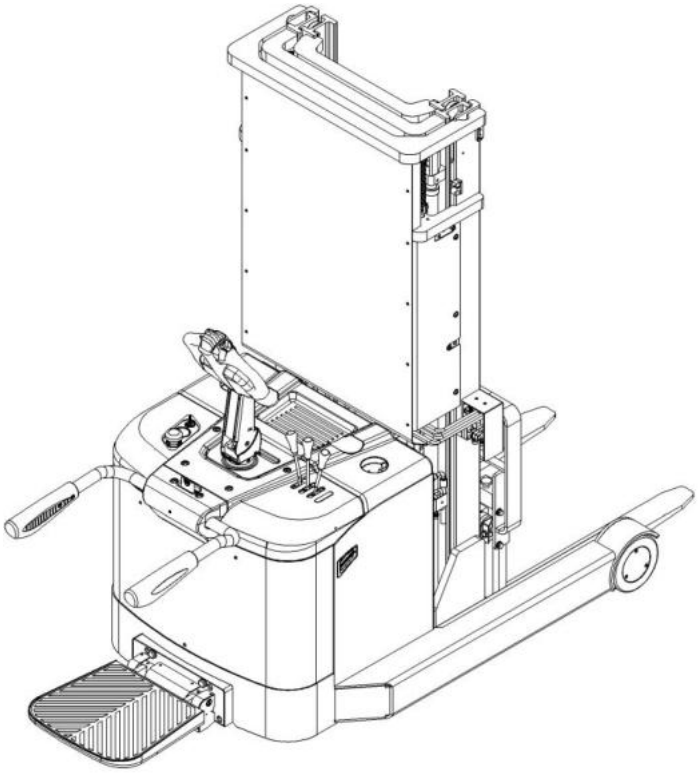

**Electric Pallet Stacker**

**PS13RMPLUS**

**PARTS MANUAL**

201546020101

Version V01

Truck Identification Number From:

Parts Manual

PS13RMPLUS-PM02EN

Please order spare parts from authorized dealers of Noblelift Intelligent Equipment Co., LTD.

In order to avoid wrong delivery, all the orders for spare parts should specify the following items:

- Truck model, identification number and manufacture year.
- Orders for spare parts of mast, hydraulic transmission unit, steering axle, motor, etc. shall indicate the manufacture number of these parts.
- Codes for Noblelift spare parts are shown in the table of parts manual. Please also pay attention to the description of supply status, order quantity, etc. (check the number listed in "Mark" column of the parts manual).

"Mark" Column:

The unmarked indicates the parts are in short supply cycle.

Number 1: supply as package. Indicating these that parts are small parts and seal parts, which are supplied in package unit and in short supply cycle.

Number 2: supply with constraints. Indicating that these spare parts are not in stock and will be prepared for production after receiving the order from customers, which are in long supply cycle.

Number 3: phasing-out supply. Indicating that these parts will be replaced by new parts due to technical improvements and the current stock will not be available when these parts run out. Please check the description of technical improvements notice.

Number 4: supply as assembly. Indicating that these parts are assembly parts defined by manufacture process, which cannot be supplied as a single part.

Number 5: check other tables.

This parts manual is the property of Noblelift and can be shared under the confidential agreement only, Noblelift has the right to claim for compensation of any unauthorized use. Copy without permission is not allowed. Figures in the manual are not limited by the original design. Noblelift Intelligent Equipment Co., LTD reserves the right to improve the products for continuous technology progress.

# Table of Contents

Chapter 1: Drive System....1
01 Drive Unit (201546013501)....1
Chapter2：Hydraulic System....3
01 Truck Hydraulic Circuit 3 (201546025001)....3
02 Multiway Valve-Circuit 3 (201546025002)....5
03 Truck Hydraulic Circuit 4 (201546025501)....7
04 Multiway Valve-Circuit 4 (201546025502)....9
05 Single Mast Hydraulic Circuit 3 (201546043001)....11
06 Single Mast Hydraulic Circuit 4 (201546043002)....13
06 Single Mast Hydraulic Circuit 4 (201546043002) Continuation....15
07 Double Mast Hydraulic Circuit 3 (201546044001)....17
08 Double Mast Hydraulic Circuit 4 (201546044002)....19
09 Triple Mast Hydraulic Circuit 3 (201546044501)....21
09 Triple Mast Hydraulic Circuit 3 (201546044501) Continuation....23
10 Triple Mast Hydraulic Circuit 4 (201546044502)....25
10 Triple Mast Hydraulic Circuit 4 (201546044502) Continuation....27
11 Oil Tank (201546019001)....29
12 Pump Unit (3.0Kw, 3.3cc) (532646023502)....31
13 Pump Unit (2.2KW, 2.0cc) (532646023503)....33
Chapter3：Truck Frame....35
01 Chassis (201546021501)....35
01 Chassis (201546021501) Continuation....37
02 Chassis (Side Extraction Battery) (201546021502)....39
02 Chassis (Side Extraction Battery) (201546021502) Continuation....41
Chapter4: Mast....43
01 Outer Mast (Double/ Triple Mast ) (201546044503)....43
01 Outer Mast (Double/ Triple Mast ) (201546044503) Continuation....45
02 Middle Mast (Triple Mast) (201546044504)....47
03 Inner Mast (Triple Mast) (201546044505)....49
03 Inner Mast (Triple Mast) (201546044505) Continuation....51
04 Inner Mast (Double Mast) (201546044003)....53
05 Single Mast (201546043003)....55
05 Single Mast (201546043003) Continuation....57
06 Fork Carriage (Single Mast) (201546038001)....59
07 Fork Carriage (Double Mast) (201546038002)....61
08 Fork Carriage (Triple Mast) (201546038003)....63
Chapter5：Steering System, Braking System, Wheels....65
01 Tiller Unit (505646011001)....65
02 Control Handle (505646010002)....67
03 EPS --- Electric Power Steering (201546031501)....69
04 Caster (532646016501)....71
05 Load Wheel (201546017001)....73

Chapter6: Electrical Parts .....75
01 Wire Harness (KORDEL) (201546033001).....75
02 Wire Harness (ZD) (201546033002) .....77
03 Controller (KORDEL) (201546033003).....79
04 Controller (ZD) (201546033004).....81
05 Charger (201546036501) .....83
06 Traction Battery (201546037001).....85
07 Traction Battery(Li) (201546037002).....87
08 Display Assembly (505646010001).....89
09 Display Assembly(Li) (201046010001).....91
Chapter7: Special Parts.....93
01 Load Backrest (216546040501).....93
02 Guard Arm (505646017501).....95
03 Platform (505646018001).....97
03 Platform (505646018001) Continuation .....99
Chapter8: Others.....101
01 Labels and Decals-US (201546047001) .....101
02 Labels and Decals-EU (201546047002).....103
03 Battery Cover (201546021001) .....105
Appendix.....107
01 Electrical Circuit Diagram (KORDEL, Lead-acid Battery).....107
02 Electrical Circuit Diagram (KORDEL, Lithium Battery).....108
03 Electrical Circuit Diagram (ZD, Lead-acid Battery).....109
04 Electrical Circuit Diagram (ZD, Lithium Battery).....110
05 Hydraulic Circuit Diagram .....111
06 Consumable Parts List .....112

# Chapter 1: Drive System

## **01** Drive Unit (**201546013501**)

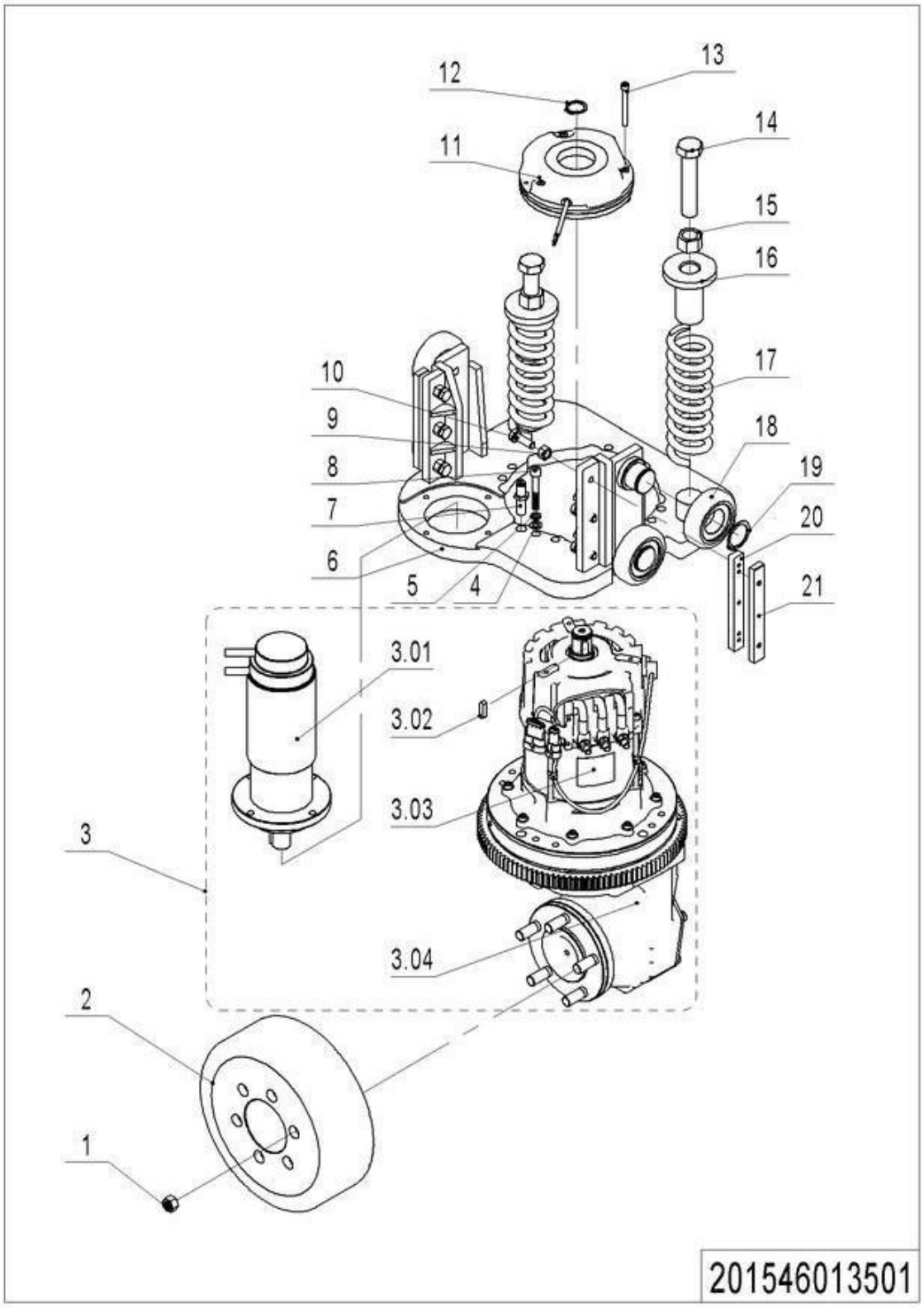


**1= Supply as package. 2= Supply with constraints. 3= Phasing-out supply. 4= Supply as assembly. 5= Check other tables.**

## 01 Drive Unit (201546013501)

| No. | Item Code | Mark | Item Description | Qty. | Substitute | Note |
|---|---|---|---|---|---|---|
| 1 | 275015520005 | 1 | Nut | 5 | | |
| 2 | 940300400002 | | WheelΦ250x82 | 1 | | |
| 3 | 940900600003 | | Steering Unit | 1 | | |
| 3 | 940900600004 | | Steering Unit | 1 | | |
| 3.01 | 201598510000 | | Steer Unit | 1 | | |
| 3.01 | 920900100050 | | Motor | 1 | | |
| 3.02 | 910600800019 | 1 | Flat Key | 1 | | |
| 3.03 | 201098510003 | | Motor | 1 | | |
| 3.04 | 201098510004 | | Gear Box | 1 | | |
| 4 | 910400100006 | 1 | Flat Washer | 6 | | |
| 5 | 910400500006 | 1 | Spring Washer | 6 | | |
| 6 | 201013510001 | | Wheel Carrier | 1 | | |
| 7 | 920200400008 | | Proximity Switch | 1 | | |
| 8 | 910200200064 | 1 | Screw | 6 | | |
| 9 | 910300100007 | 1 | Nut | 6 | | |
| 10 | 910100300037 | 1 | Bolt | 6 | | |
| 11 | 940700100002 | | Brake | 1 | | |
| 12 | 910401300014 | | Circlip | 1 | | |
| 13 | 910200200046 | 1 | Screw | 3 | | |
| 14 | 910100300088 | 1 | Bolt | 2 | | |
| 15 | 910300100012 | 1 | Nut | 2 | | |
| 16 | 216513520003 | | Axe | 2 | | |
| 17 | 201013520011 | | Spring | 2 | | |
| 18 | 940200100011 | | Main Roller | 4 | | |
| 19 | 910401300018 | 1 | Circlip | 4 | | |
| 20 | 201013520000 | | Mounting Plate | 2 | | |
| 21 | 940500500001 | | Wear Plate | 2 | | |

**1= Supply as package. 2= Supply with constraints. 3= Phasing-out supply. 4= Supply as assembly. 5= Check other tables.**

# Chapter2：Hydraulic System

## 01 Truck Hydraulic Circuit 3 (201546025001)

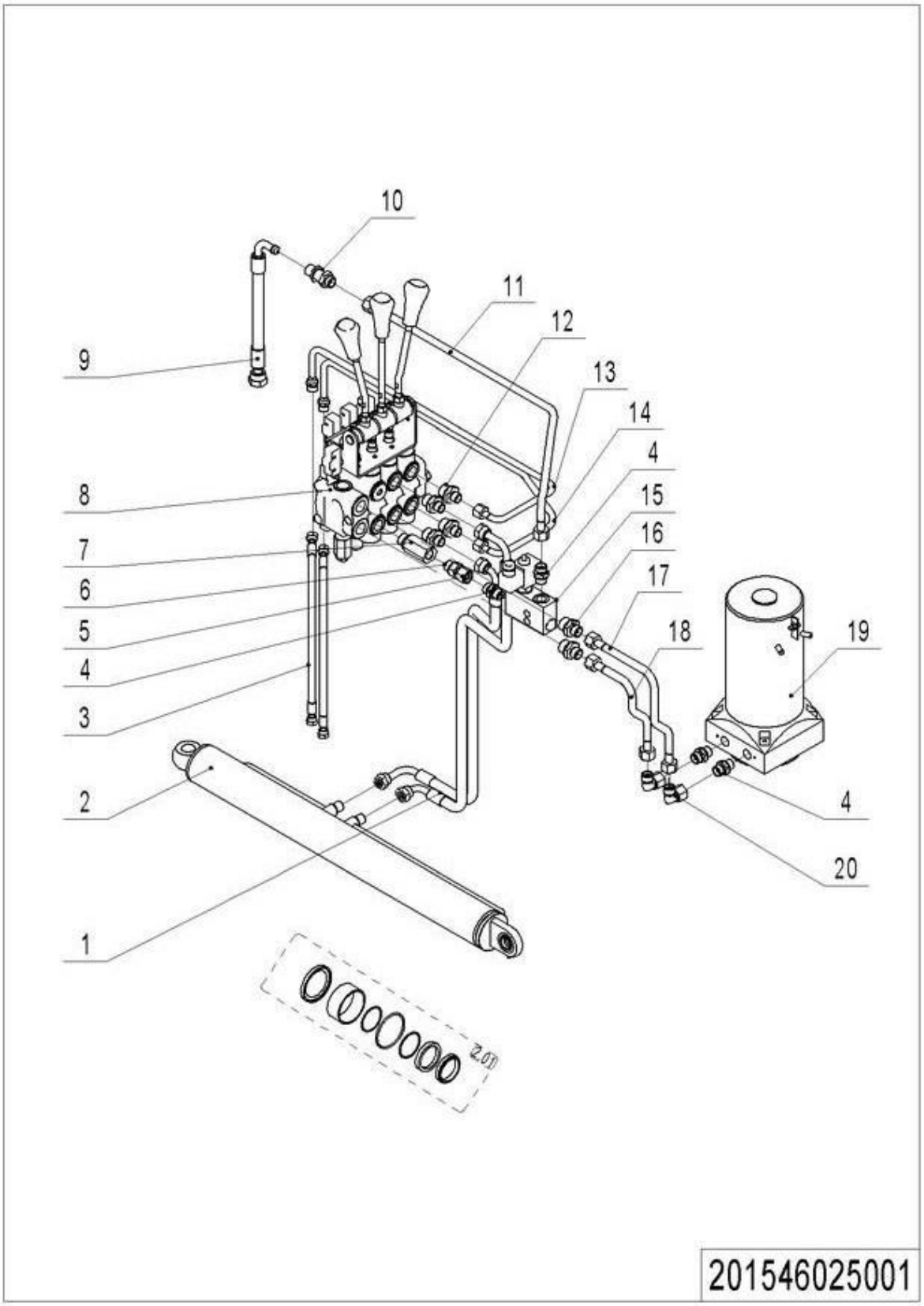


1= Supply as package. 2= Supply with constraints. 3= Phasing-out supply. 4= Supply as assembly. 5= Check other tables.

# 01 Truck Hydraulic Circuit 3 (201546025001)

| No. | Item Code | Mark | Item Description | Qty. | Substitute | Note |
|---|---|---|---|---|---|---|
| 1 | 201025020016 | | Hose | 2 | | |
| 2 | 201520010000 | | Cylinder | 1 | | |
| 2.01 | 201598510001 | | Seal Kit | 1 | | |
| 3 | 202025020000 | | Hose | 2 | | |
| 4 | 950400300009 | | Joint | 4 | | |
| 5 | 950400100001 | | Joint | 1 | | |
| 6 | 950600400003 | | Throttle Valve | 1 | | |
| 7 | 201025020010 | | Multitandem Valve | 1 | | |
| 8 | 201025001001 | | Multi-way Valve | 1 | | Check 201546025002 |
| 9 | 202025020001 | | Hose | 1 | | |
| 10 | 950400500002 | | Joint | 1 | | |
| 11 | 201025020011 | | Steel Tube | 1 | | |
| 12 | 950400400012 | | Joint | 4 | | |
| 13 | 201025020012 | | Steel Tube | 1 | | |
| 14 | 201025020013 | | Steel Tube | 1 | | |
| 15 | 950700200004 | | Valve | 1 | | |
| 16 | 201025020019 | | Adapter | 2 | | |
| 17 | 201025020017 | | Steel Tube | 1 | | |
| 18 | 201025020018 | | Steel Tube | 1 | | |
| 19 | 950900100070 | | Pump Unit | 1 | | Check 532646023503 |
| 19 | 950900100064 | | Pump Unit | 1 | | Check 532646023502 |
| 20 | 950400200004 | | Joint | 2 | | |

**1= Supply as package. 2= Supply with constraints. 3= Phasing-out supply. 4= Supply as assembly. 5= Check other tables.**

## 02 Multiway Valve-Circuit 3 (201546025002)

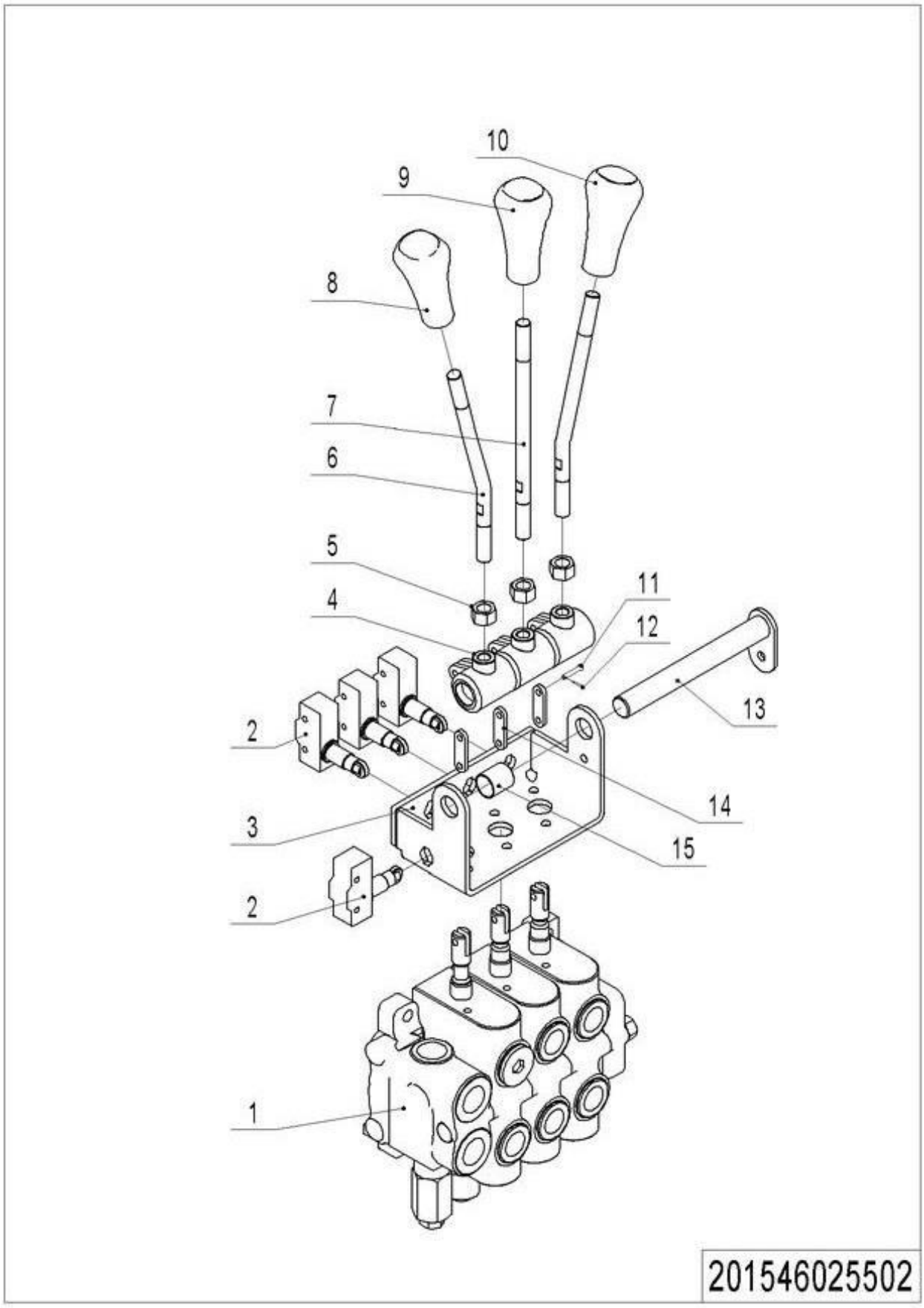


**1= Supply as package. 2= Supply with constraints. 3= Phasing-out supply. 4= Supply as assembly. 5= Check other tables.**

## 02 Multiway Valve-Circuit 3 (201546025002)

| No. | Item Code | Mark | Item Description | Qty. | Substitute | Note |
|---|---|---|---|---|---|---|
| 1 | 950700100002 | | Multi-way Valve | 1 | | |
| 2 | 920200300004 | | Microswitch | 4 | | |
| 3 | 201025010000 | | Mounting Rack | 1 | | |
| 4 | 201025020003 | | Bracket | 3 | | |
| 5 | 910300100007 | | Nut | 3 | | |
| 6 | 201025020004 | | Joystick | 2 | | |
| 7 | 201025020005 | | Joystick | 1 | | |
| 8 | 216525020010 | | Knob | 1 | | |
| 9 | 216525020011 | | Knob | 1 | | |
| 10 | 216525020012 | | Knob | 1 | | |
| 11 | 910600700002 | 1 | Pin | 6 | | |
| 12 | 910600600005 | 1 | Cotter Pin | 6 | | |
| 13 | 201025010001 | | Pin | 1 | | |
| 14 | 201025020008 | 1 | Plate | 3 | | |
| 15 | 940500100007 | 1 | Bushing | 3 | | |

**1= Supply as package. 2= Supply with constraints. 3= Phasing-out supply. 4= Supply as assembly. 5= Check other tables.**

## 03 Truck Hydraulic Circuit 4 (201546025501)

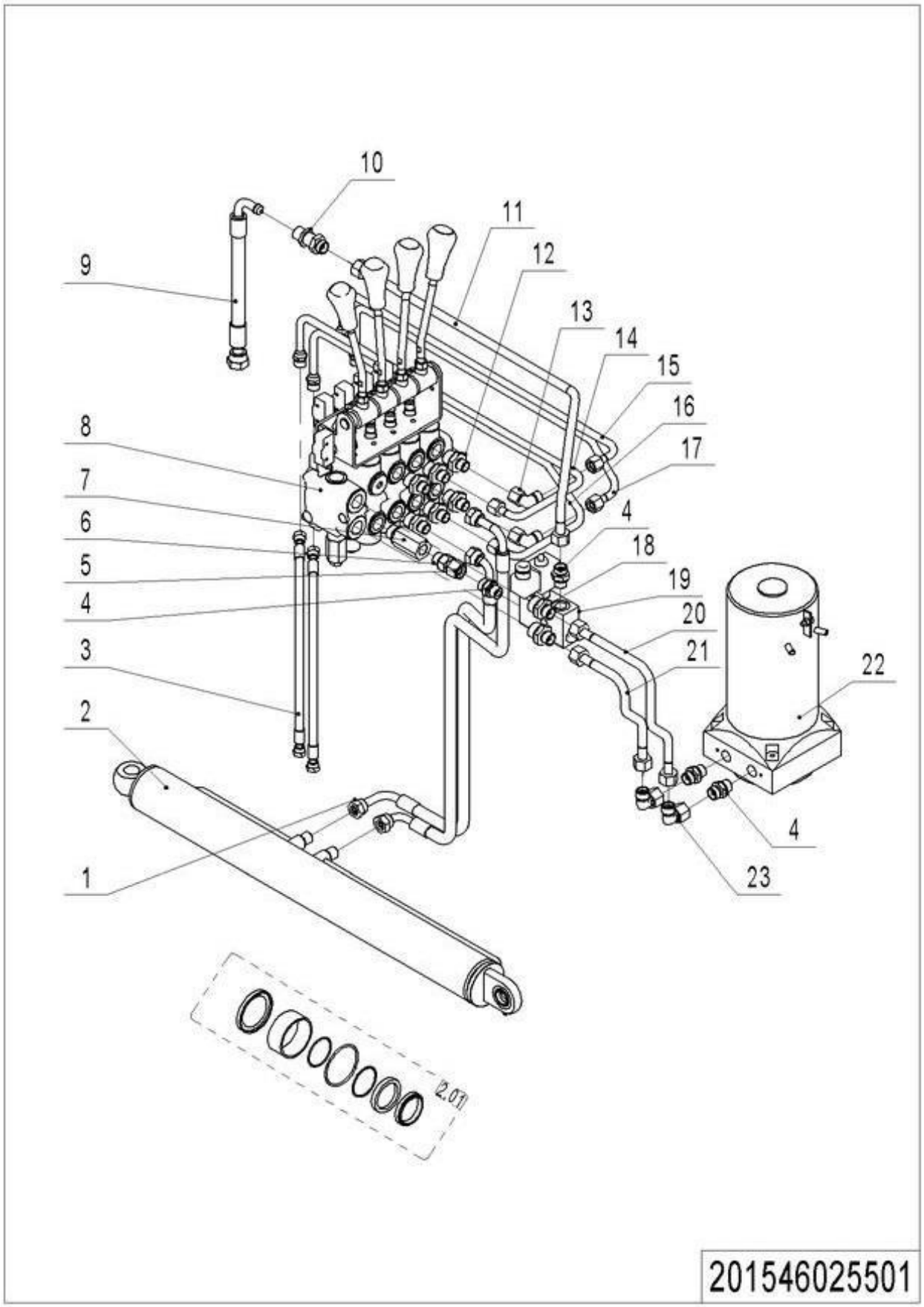


**1= Supply as package. 2= Supply with constraints. 3= Phasing-out supply. 4= Supply as assembly. 5= Check other tables.**

# 03 Truck Hydraulic Circuit 4 (201546025501)

| No. | Item Code | Mark | Item Description | Qty. | Substitute | Note |
|---|---|---|---|---|---|---|
| 1 | 201025020016 | | Hose | 2 | | |
| 2 | 201520010001 | | Cylinder | 1 | | |
| 2.01 | 201598510001 | | Seal Kit | 1 | | |
| 3 | 202025020000 | | Hose | 2 | | |
| 4 | 950400300009 | | Joint | 4 | | |
| 5 | 950400100001 | | Joint | 1 | | |
| 6 | 950600400003 | | Throttle Valve | 1 | | |
| 7 | 201025020010 | | Multitandem Valve | 1 | | |
| 8 | 201025501001 | | Multi-way Valve | 1 | | Check 201546025502 |
| 9 | 202025020001 | | Hose | 1 | | |
| 10 | 950400500002 | | Joint | 1 | | |
| 11 | 201025020011 | | Steel Tube | 1 | | |
| 12 | 950400400012 | | Joint | 6 | | |
| 13 | 950400200003 | | Joint | 2 | | |
| 14 | 201025020012 | | Steel Tube | 1 | | |
| 15 | 201025520001 | | Steel Tube | 1 | | |
| 16 | 201025020013 | | Steel Tube | 1 | | |
| 17 | 201025520000 | | Steel Tube | 1 | | |
| 18 | 201025020019 | | Adapter | 2 | | |
| 19 | 950700200004 | | Valve | 1 | | |
| 20 | 201025020017 | | Steel Tube | 1 | | |
| 21 | 201025020018 | | Steel Tube | 1 | | |
| 22 | 950900100070 | | Pump Unit | 1 | | Check 532646023503 |
| 22 | 950900100064 | | Pump Unit | 1 | | Check 532646023502 |
| 23 | 950400200004 | | Joint | 2 | | |

**1= Supply as package. 2= Supply with constraints. 3= Phasing-out supply. 4= Supply as assembly. 5= Check other tables.**

## 04 Multiway Valve-Circuit 4 (201546025502)

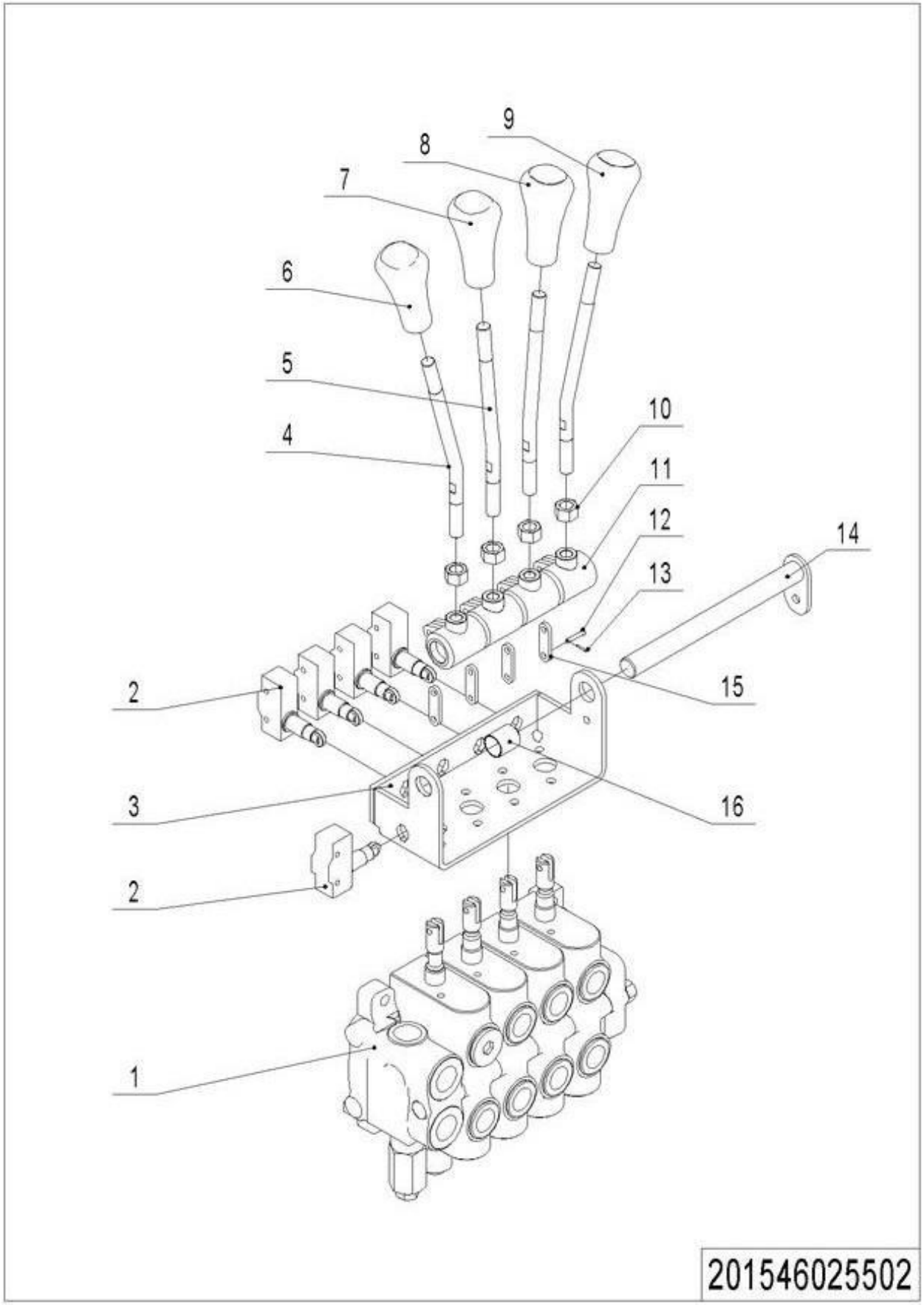


**1= Supply as package. 2= Supply with constraints. 3= Phasing-out supply. 4= Supply as assembly. 5= Check other tables.**

## 04 Multiway Valve-Circuit 4 (201546025502)

| No. | Item Code | Mark | Item Description | Qty. | Substitute | Note |
|---|---|---|---|---|---|---|
| 1 | 950700100005 | | Multi-way Valve | 1 | | |
| 2 | 920200300004 | | Microswitch | 5 | | |
| 3 | 201025510000 | | Mounting Rack | 1 | | |
| 4 | 201025020004 | | Joystick | 2 | | |
| 5 | 201025520004 | | Joystick | 2 | | |
| 6 | 216525020010 | | Knob | 1 | | |
| 7 | 216525020011 | | Knob | 1 | | |
| 8 | 216525020012 | | Knob | 1 | | |
| 9 | 216525520000 | | Knob | 1 | | |
| 10 | 910300100007 | | Nut | 4 | | |
| 11 | 201025020003 | | Bracket | 4 | | |
| 12 | 910600700002 | 1 | Pin | 8 | | |
| 13 | 910600600005 | 1 | Cotter Pin | 8 | | |
| 14 | 201025510001 | | Pin | 1 | | |
| 15 | 201025020008 | 1 | Plate | 4 | | |
| 16 | 940500100007 | 1 | Bushing | 4 | | |

**1= Supply as package. 2= Supply with constraints. 3= Phasing-out supply. 4= Supply as assembly. 5= Check other tables.**

# 05 Single Mast Hydraulic Circuit 3 (201546043001)

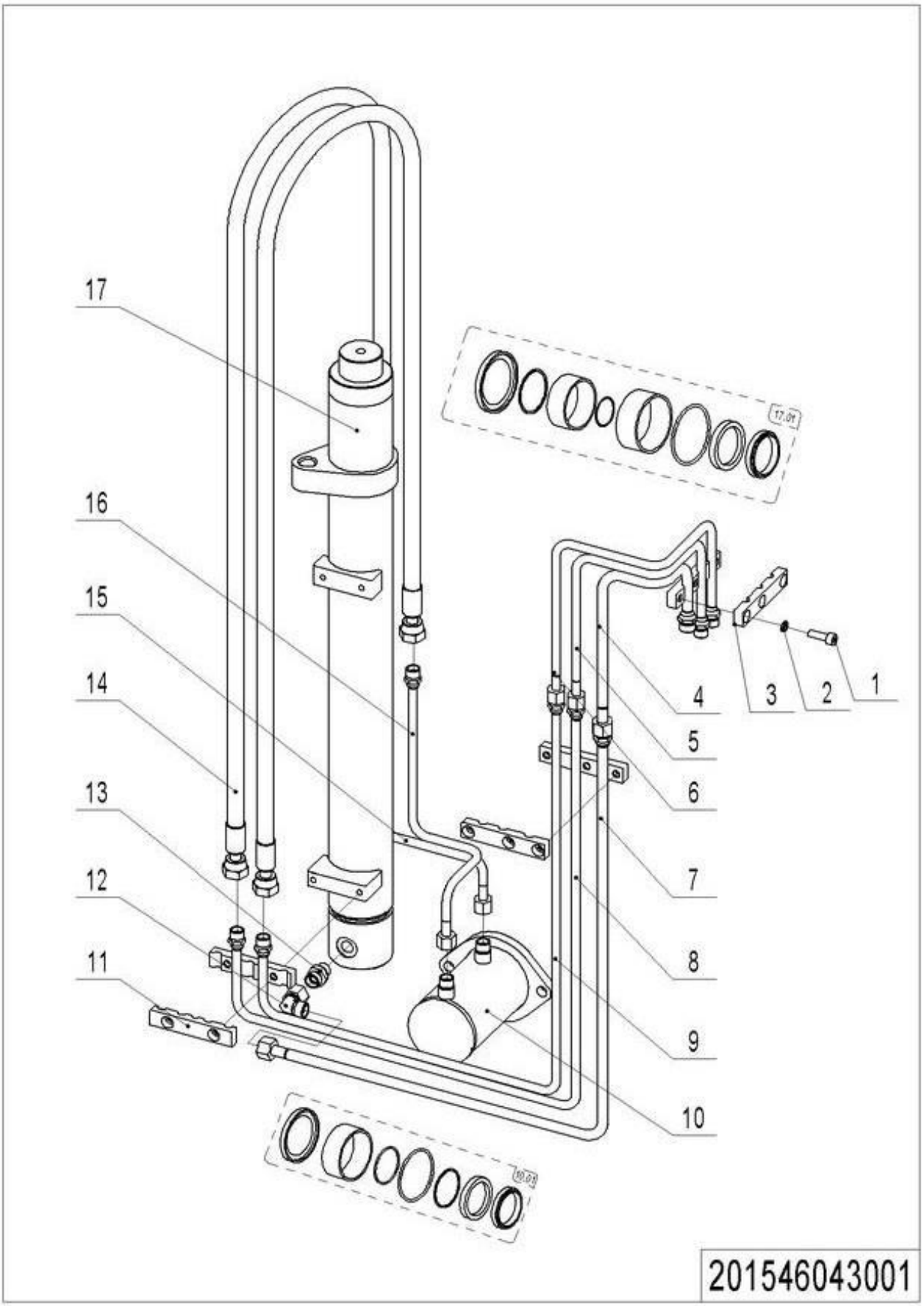


**1= Supply as package. 2= Supply with constraints. 3= Phasing-out supply. 4= Supply as assembly. 5= Check other tables.**

## 05 Single Mast Hydraulic Circuit 3 (201546043001)

| No. | Item Code | Mark | Item Description | Qty. | Substitute | Note |
|---|---|---|---|---|---|---|
| 1 | 910200200058 | 1 | Screw | 6 | | |
| 2 | 910400500006 | 1 | Spring Washer | 6 | | |
| 3 | 201044520022 | 1 | Pipe Clip | 4 | | |
| 4 | 201043020009 | | Steel Tube | 1 | | |
| 5 | 201043020010 | | Steel Tube | 1 | | |
| 6 | 201043020011 | | Steel Tube | 1 | | |
| 7 | 201543020013 | | Steel Tube | 1 | | |
| 8 | 201543020014 | | Steel Tube | 1 | | |
| 9 | 201543020015 | | Steel Tube | 1 | | |
| 10 | 201520510000 | | Cylinder | 1 | | |
| 10.01 | 201598510004 | | Seal Kit | 1 | | |
| 11 | 201044520062 | 1 | Pipe Clip | 2 | | |
| 12 | 950400200004 | | Joint | 1 | | |
| 13 | 951000600001 | | Explosion Proof Valve | 1 | | |
| 14 | 201043020015 | | Hose | 2 | | 4800/1600 |
| 14 | 201044520092 | | Hose | 2 | | 3600/1200 |
| 14 | 201043020017 | | Hose | 2 | | 1800 |
| 15 | 201044520073 | | Steel Tube | 1 | | |
| 16 | 201044520074 | | Steel Tube | 1 | | |
| 17 | 201544510013 | | Cylinder | 1 | | 4800/1600 |
| 17 | 201544510015 | | Cylinder | 1 | | 3600/1200 |
| 17 | 201544510016 | | Cylinder | 1 | | 1800 |
| 17.01 | 201598510002 | | Seal Kit | 1 | | |

**1= Supply as package. 2= Supply with constraints. 3= Phasing-out supply. 4= Supply as assembly. 5= Check other tables.**

# 06 Single Mast Hydraulic Circuit 4 (201546043002)

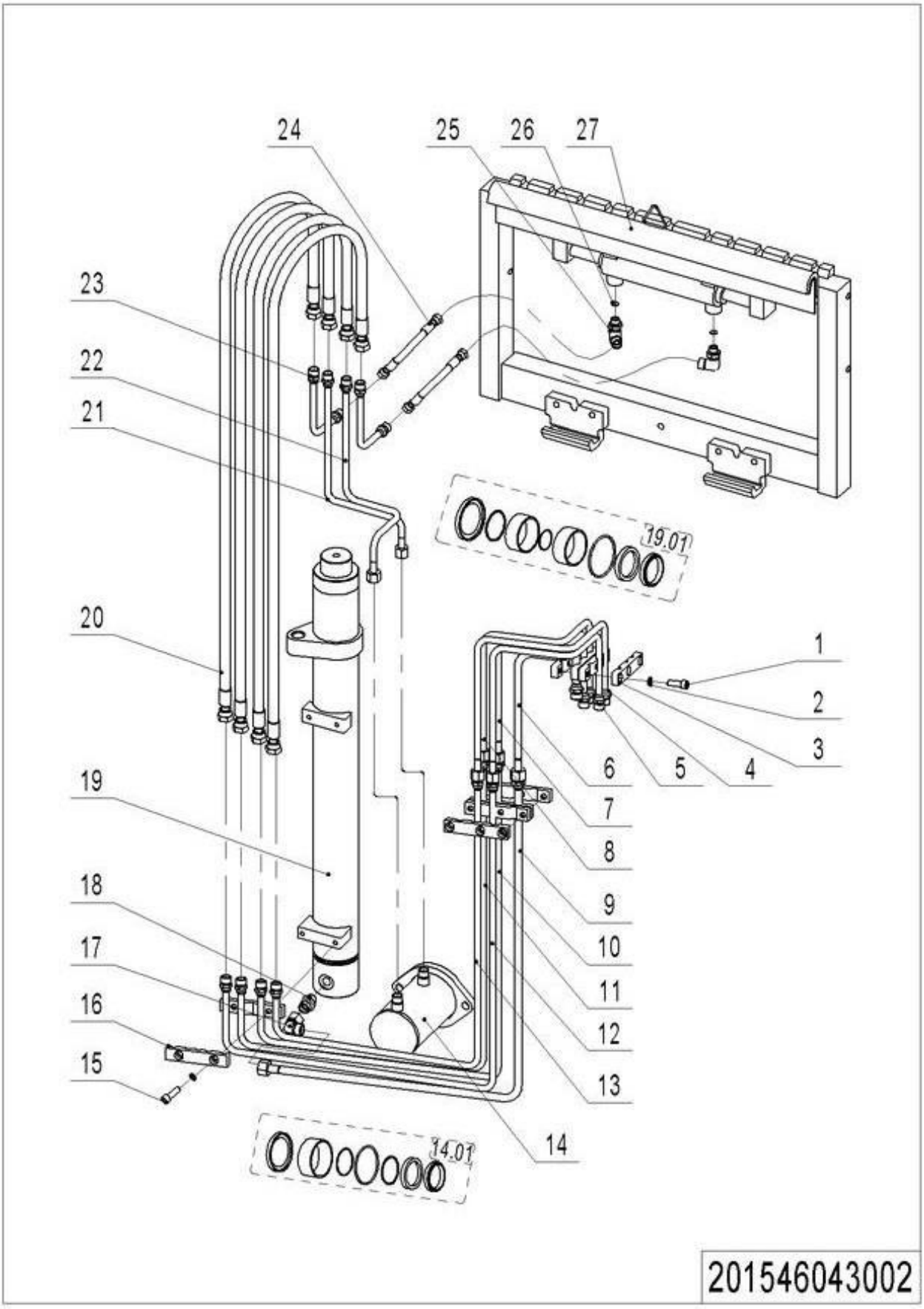


**1= Supply as package. 2= Supply with constraints. 3= Phasing-out supply. 4= Supply as assembly. 5= Check other tables.**

## 06 Single Mast Hydraulic Circuit 4 (201546043002)

| No. | Item Code | Mark | Item Description | Qty. | Substitute | Note |
|---|---|---|---|---|---|---|
| 1 | 910200200064 | 1 | Screw | 4 | | |
| 2 | 910400500006 | 1 | Spring Washer | 6 | | |
| 3 | 201044520022 | 1 | Pipe Clip | 4 | | |
| 4 | 201527020003 | | Steel Tube | 1 | | |
| 5 | 201527020002 | | Steel Tube | 1 | | |
| 6 | 201043020009 | | Steel Tube | 1 | | |
| 7 | 201043020010 | | Steel Tube | 1 | | |
| 8 | 201043020011 | | Steel Tube | 1 | | |
| 9 | 201543020013 | | Steel Tube | 1 | | |
| 10 | 201543020014 | | Steel Tube | 1 | | |
| 11 | 201543020015 | | Steel Tube | 1 | | |
| 12 | 201527020000 | | Steel Tube | 1 | | |
| 13 | 201527020001 | | Steel Tube | 1 | | |
| 14 | 201520510000 | | Cylinder | 1 | | |
| 14.01 | 201598510004 | | Seal Kit | 1 | | |
| 15 | 910200200058 | 1 | Screw | 2 | | |
| 16 | 201044520062 | 1 | Pipe Clip | 2 | | |
| 17 | 950400200004 | | Joint | 1 | | |
| 18 | 951000600001 | | Explosion Proof Valve | 1 | | |
| 19 | 201544510013 | | Cylinder | 1 | | 4800/1600 |
| 19 | 201544510015 | | Cylinder | 1 | | 3600/1200 |
| 19 | 201544510016 | | Cylinder | 1 | | 1800 |
| 19.01 | 201598510002 | | Seal Kit | 1 | | |
| 20 | 201043020015 | | Hose | 4 | | 4800/1600 |
| 20 | 201044520092 | | Hose | 4 | | 3600/1200 |
| 20 | 201043020017 | | Hose | 4 | | 1800 |
| 21 | 201044520073 | | Steel Tube | 1 | | |
| 22 | 201044520074 | | Steel Tube | 1 | | |
| 23 | 201030520012 | | Steel Tube | 2 | | |
| 24 | 201030520013 | | Hose | 2 | | |

**1= Supply as package. 2= Supply with constraints. 3= Phasing-out supply. 4= Supply as assembly. 5= Check other tables.**

# 06 Single Mast Hydraulic Circuit 4 (201546043002) Continuation

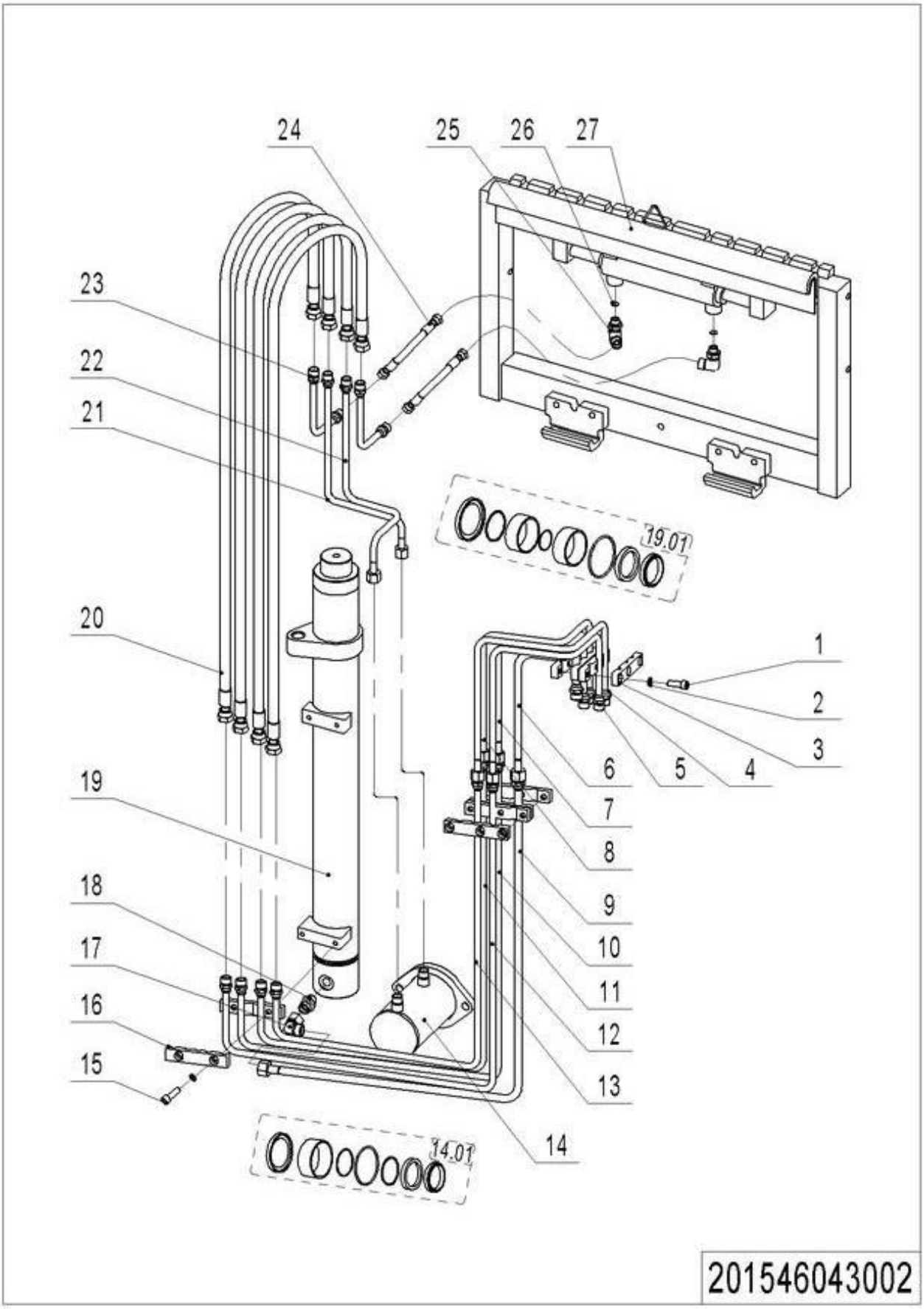


**1= Supply as package. 2= Supply with constraints. 3= Phasing-out supply. 4= Supply as assembly. 5= Check other tables.**

## 06 Single Mast Hydraulic Circuit 4 (201546043002) **Continuation**

| No. | Item Code | Mark | Item Description | Qty. | Substitute | Note |
|---|---|---|---|---|---|---|
| 25 | 950401100003 | | Joint | 2 | | |
| 26 | 201030520014 | 1 | Damper | 2 | | |
| 27 | 940100200008 | | Side Shifter | 1 | | |

**1= Supply as package. 2= Supply with constraints. 3= Phasing-out supply. 4= Supply as assembly. 5= Check other tables.**

# 07 Double Mast Hydraulic Circuit 3 (201546044001)

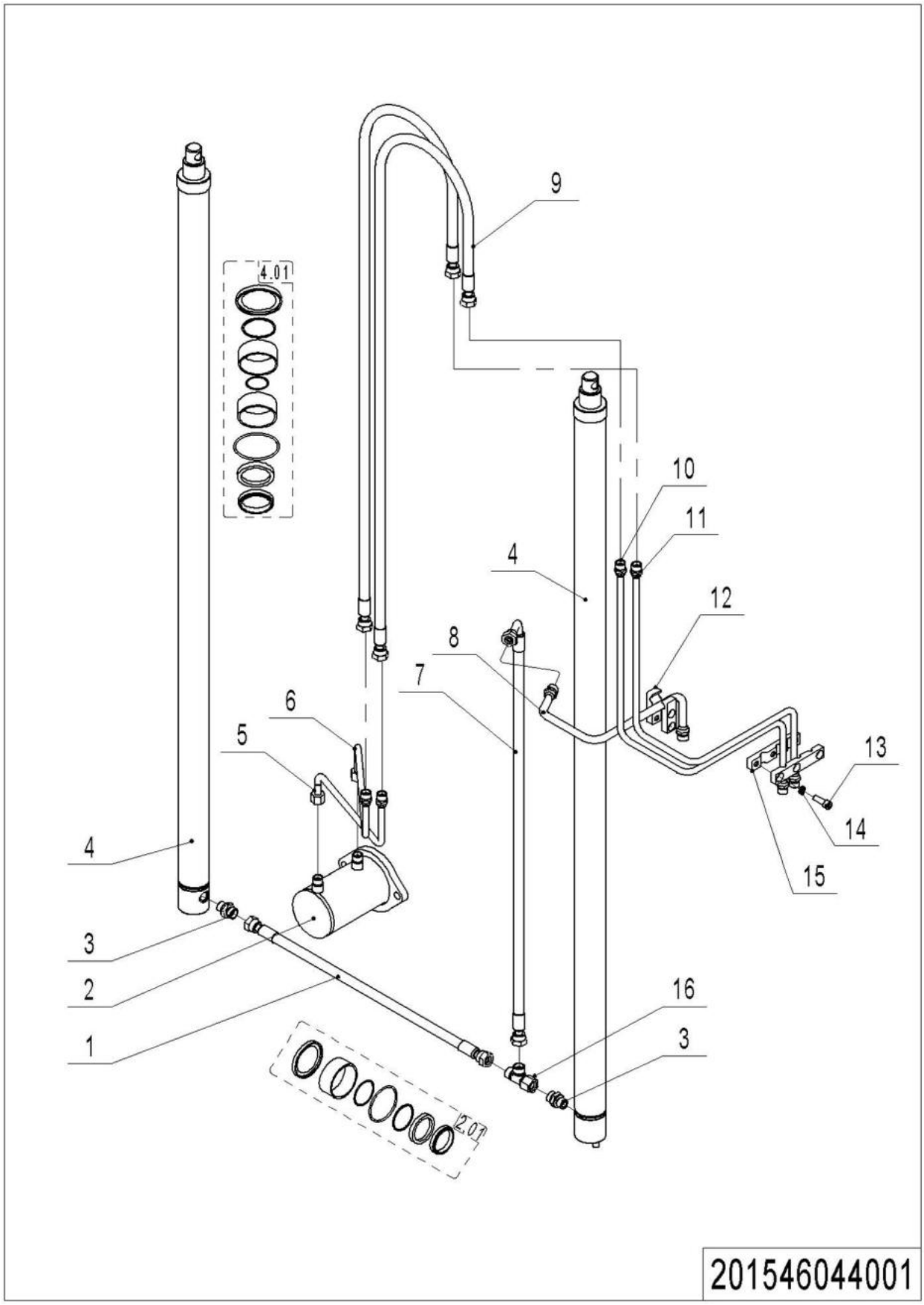


**1= Supply as package. 2= Supply with constraints. 3= Phasing-out supply. 4= Supply as assembly. 5= Check other tables.**

# 07 Double Mast Hydraulic Circuit 3 (201546044001)

| No. | Item Code | Mark | Item Description | Qty. | Substitute | Note |
|---|---|---|---|---|---|---|
| 1 | 201544020002 | | Hose | 1 | | |
| 2 | 201520510000 | | Cylinder | 1 | | |
| 2.01 | 201598510004 | | Seal Kit | 1 | | |
| 3 | 951000600001 | | Explosion Proof Valve | 2 | | |
| 4 | 201544510010 | | Cylinder | 2 | | 4800 |
| 4 | 201544510011 | | Cylinder | 2 | | 4500/3000 |
| 4 | 201544510012 | | Cylinder | 2 | | 3600/2400 |
| 4.01 | 201598510003 | | Seal Kit | 1 | | |
| 5 | 201544020001 | | Steel Tube | 1 | | |
| 6 | 201544020000 | | Steel Tube | 1 | | |
| 7 | 201044520087 | | Hose | 1 | | |
| 8 | 201044520070 | | Steel Tube | 1 | | |
| 9 | 201544520035 | | Hose | 2 | | 4800 |
| 9 | 201044520078 | | Hose | 2 | | 4500/3000 |
| 9 | 201044520092 | | Hose | 2 | | 3600/2400 |
| 10 | 201044520071 | | Steel Tube | 1 | | |
| 11 | 201044520072 | | Steel Tube | 1 | | |
| 12 | 201044520062 | 1 | Pipe Clip | 2 | | |
| 13 | 910200200058 | 1 | Screw | 3 | | |
| 14 | 910400500006 | 1 | Spring Washer | 3 | | |
| 15 | 201044520022 | 1 | Pipe Clip | 2 | | |
| 16 | 950401000001 | | Joint | 1 | | |

**1= Supply as package. 2= Supply with constraints. 3= Phasing-out supply. 4= Supply as assembly. 5= Check other tables.**

## 08 Double Mast Hydraulic Circuit 4 (201546044002)

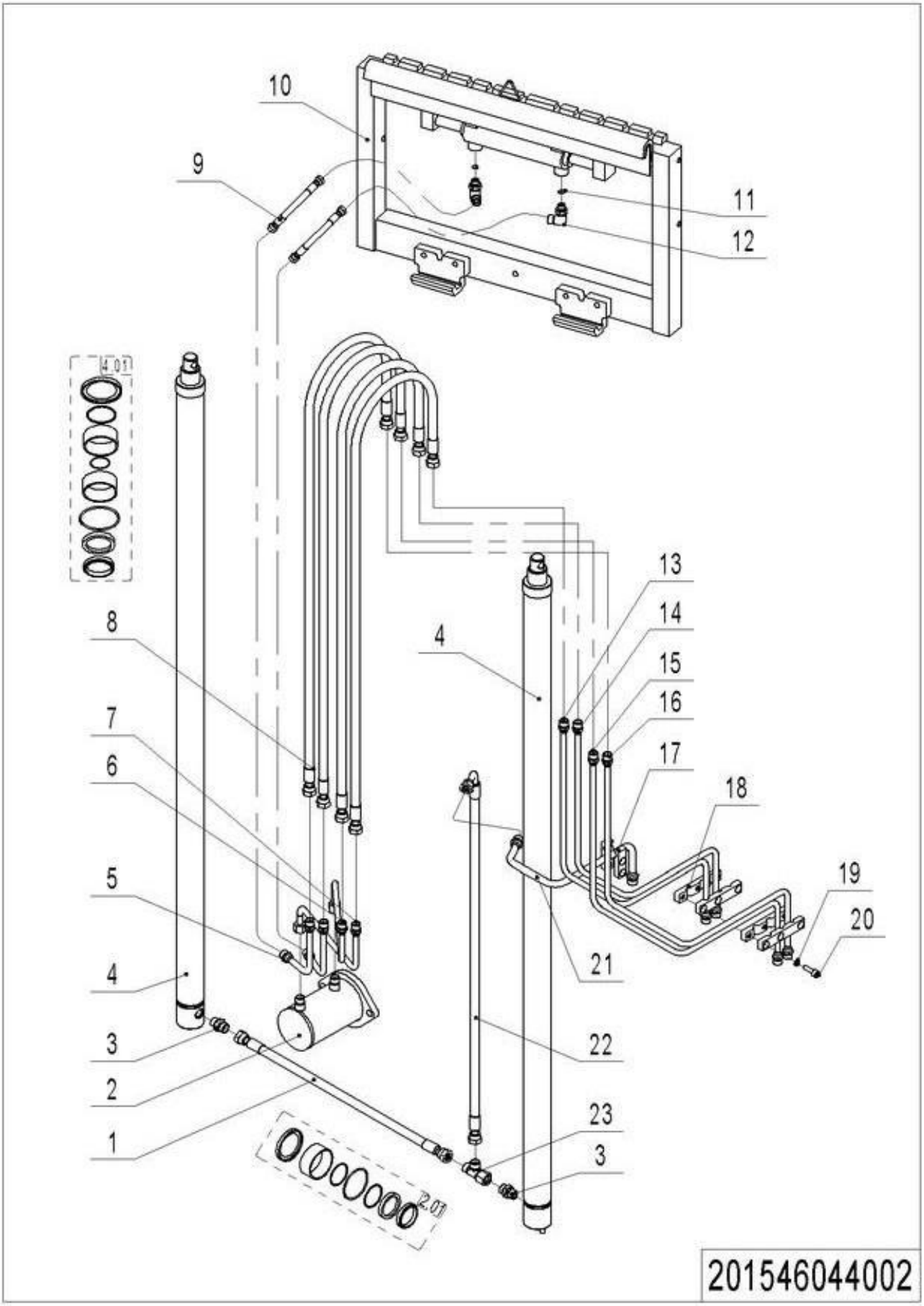


**1= Supply as package. 2= Supply with constraints. 3= Phasing-out supply. 4= Supply as assembly. 5= Check other tables.**

# 08 Double Mast Hydraulic Circuit 4 (201546044002)

| No. | Item Code | Mark | Item Description | Qty. | Substitute | Note |
|---|---|---|---|---|---|---|
| 1 | 201544020002 | | Hose | 1 | | |
| 2 | 201520510000 | | Cylinder | 1 | | |
| 2.01 | 201598510004 | | Seal Kit | 1 | | |
| 3 | 951000600001 | | Explosion Proof Valve | 2 | | |
| 4 | 201544510010 | | Cylinder | 2 | | 4800 |
| 4 | 201544510011 | | Cylinder | 2 | | 4500/3000 |
| 4 | 201544510012 | | Cylinder | 2 | | 3600/2400 |
| 4.01 | 201598510003 | | Seal Kit | 1 | | |
| 5 | 201027520000 | | Steel Tube | 2 | | |
| 6 | 201544020000 | | Steel Tube | 1 | | |
| 7 | 201544020001 | | Steel Tube | 1 | | |
| 8 | 201544520035 | | Hose | 4 | | 4800 |
| 8 | 201044520078 | | Hose | 4 | | 4500/3000 |
| 8 | 201044520092 | | Hose | 4 | | 3600/2400 |
| 9 | 201030520013 | | Hose | 2 | | |
| 10 | 940100200008 | | Side Shifter | 1 | | |
| 11 | 201030520014 | 1 | Damper | 2 | | |
| 12 | 950401100003 | | Joint | 2 | | |
| 13 | 201044520071 | | Steel Tube | 1 | | |
| 14 | 201044520072 | | Steel Tube | 1 | | |
| 15 | 201030520000 | | Steel Tube | 1 | | |
| 16 | 201030520001 | | Steel Tube | 1 | | |
| 17 | 201044520062 | 1 | Pipe Clip | 2 | | |
| 18 | 201044520022 | 1 | Pipe Clip | 2 | | |
| 19 | 910400500006 | 1 | Spring Washer | 3 | | |
| 20 | 910200200058 | 1 | Screw | 3 | | |
| 21 | 201044520070 | | Steel Tube | 1 | | |
| 22 | 201044520087 | | Hose | 1 | | |
| 23 | 950401000001 | | Joint | 1 | | |

**1= Supply as package. 2= Supply with constraints. 3= Phasing-out supply. 4= Supply as assembly. 5= Check other tables.**

# 09 Triple Mast Hydraulic Circuit 3 (201546044501)

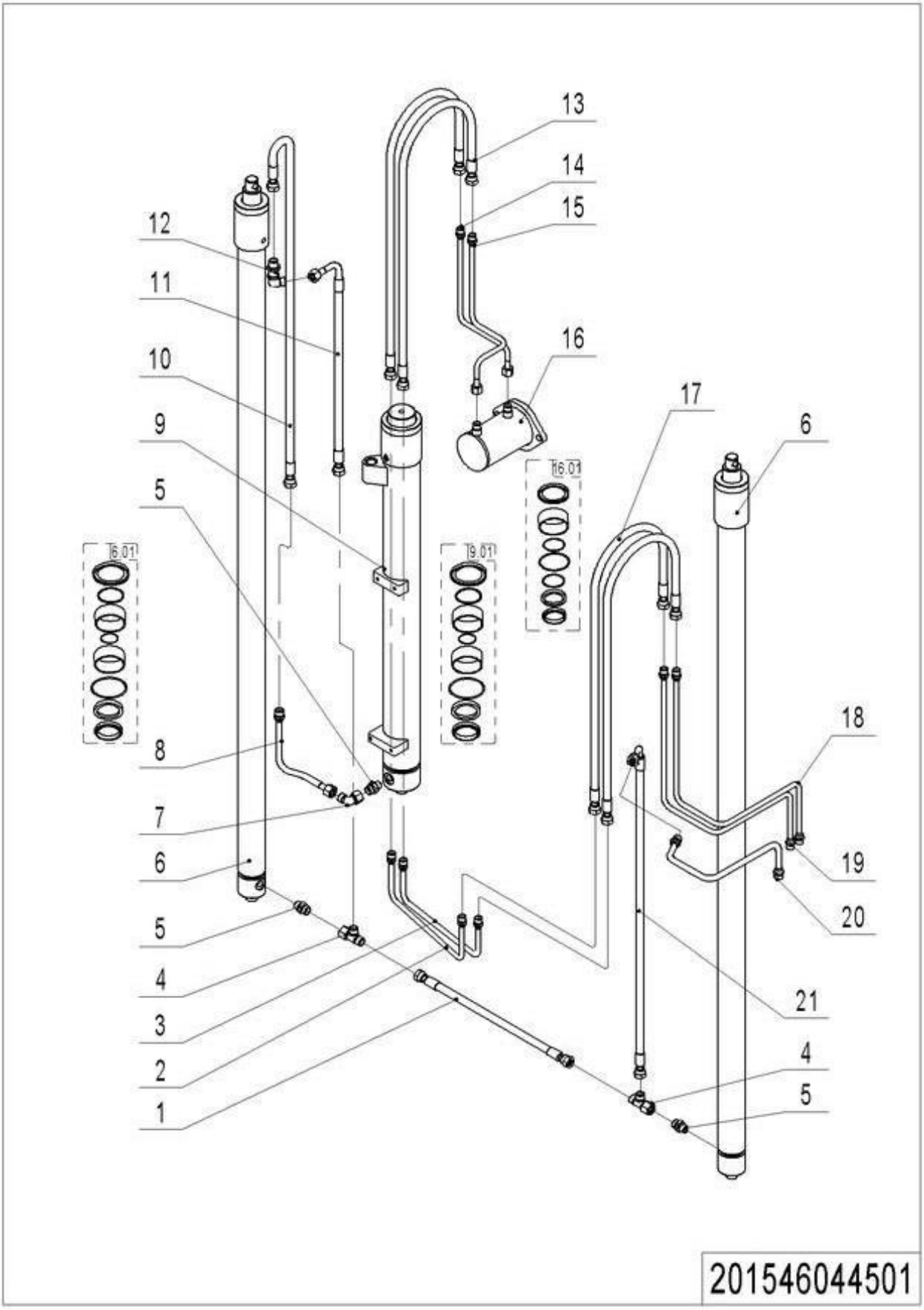


**1= Supply as package. 2= Supply with constraints. 3= Phasing-out supply. 4= Supply as assembly. 5= Check other tables.**

# 09 Triple Mast Hydraulic Circuit 3 (201546044501)

| No. | Item Code | Mark | Item Description | Qty. | Substitute | Note |
|---|---|---|---|---|---|---|
| 1 | 201544520034 | | Hose | 1 | | |
| 2 | 201544520032 | | Steel Tube | 1 | | |
| 3 | 201544520031 | | Steel Tube | 1 | | |
| 4 | 950401000001 | | Joint | 2 | | |
| 5 | 951000600001 | | Explosion Proof Valve | 3 | | |
| 6 | 201544510010 | | Cylinder | 2 | | 4800 |
| 6 | 201544510011 | | Cylinder | 2 | | 4500 |
| 6 | 201544510012 | | Cylinder | 2 | | 3600 |
| 6.01 | 201598510003 | | Seal Kit | 1 | | |
| 7 | 950400200004 | | Joint | 1 | | |
| 8 | 201544520033 | | Steel Tube | 1 | | |
| 9 | 201544510013 | | Cylinder | 1 | | 4800 |
| 9 | 201544510014 | | Cylinder | 1 | | 4500 |
| 9 | 201544510015 | | Cylinder | 1 | | 3600 |
| 9.01 | 201598510002 | | Seal Kit | 1 | | |
| 10 | 201544520036 | | Hose | 1 | | 4800 |
| 10 | 201044520082 | | Hose | 1 | | 4500 |
| 10 | 201044520083 | | Hose | 1 | | 3600 |
| 11 | 201544520037 | | Hose | 1 | | 4800 |
| 11 | 201044520084 | | Hose | 1 | | 4500 |
| 11 | 201044520085 | | Hose | 1 | | 3600 |
| 12 | 950400600003 | | Joint | 1 | | |
| 13 | 201043020015 | | Hose | 2 | | 4800 |
| 13 | 201044520080 | | Hose | 2 | | 4500 |
| 13 | 201044520092 | | Hose | 2 | | 3600 |
| 14 | 201044520073 | | Steel Tube | 1 | | |
| 15 | 201044520074 | | Steel Tube | 1 | | |
| 16 | 201520510000 | | Cylinder | 1 | | |
| 16.01 | 201598510004 | | Seal Kit | 1 | | |
| 17 | 201544520035 | | Hose | 2 | | 4800 |

**1= Supply as package. 2= Supply with constraints. 3= Phasing-out supply. 4= Supply as assembly. 5= Check other tables.**

# 09 Triple Mast Hydraulic Circuit 3 (201546044501) Continuation

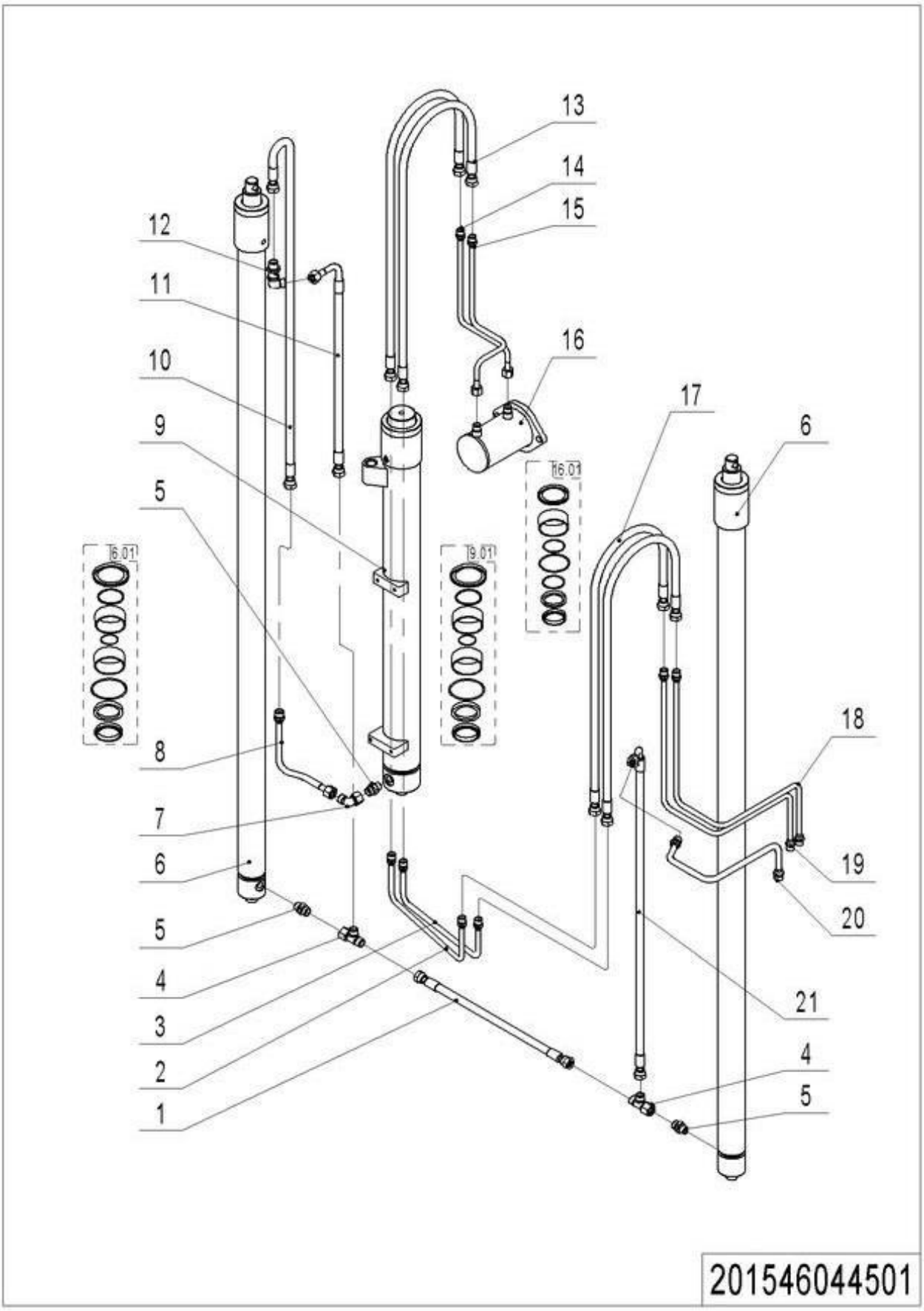


**1= Supply as package. 2= Supply with constraints. 3= Phasing-out supply. 4= Supply as assembly. 5= Check other tables.**

## 09 Triple Mast Hydraulic Circuit 3 (201546044501) Continuation

| No. | Item Code | Mark | Item Description | Qty. | Substitute | Note |
|---|---|---|---|---|---|---|
| 17 | 201044520078 | | Hose | 2 | | 4500 |
| 17 | 201044520092 | | Hose | 2 | | 3600 |
| 18 | 201044520072 | | Steel Tube | 1 | | |
| 19 | 201044520071 | | Steel Tube | 1 | | |
| 20 | 201044520070 | | Steel Tube | 1 | | |
| 21 | 201044520087 | | Hose | 1 | | |

**1= Supply as package. 2= Supply with constraints. 3= Phasing-out supply. 4= Supply as assembly. 5= Check other tables.**

# 10 Triple Mast Hydraulic Circuit 4 (201546044502)

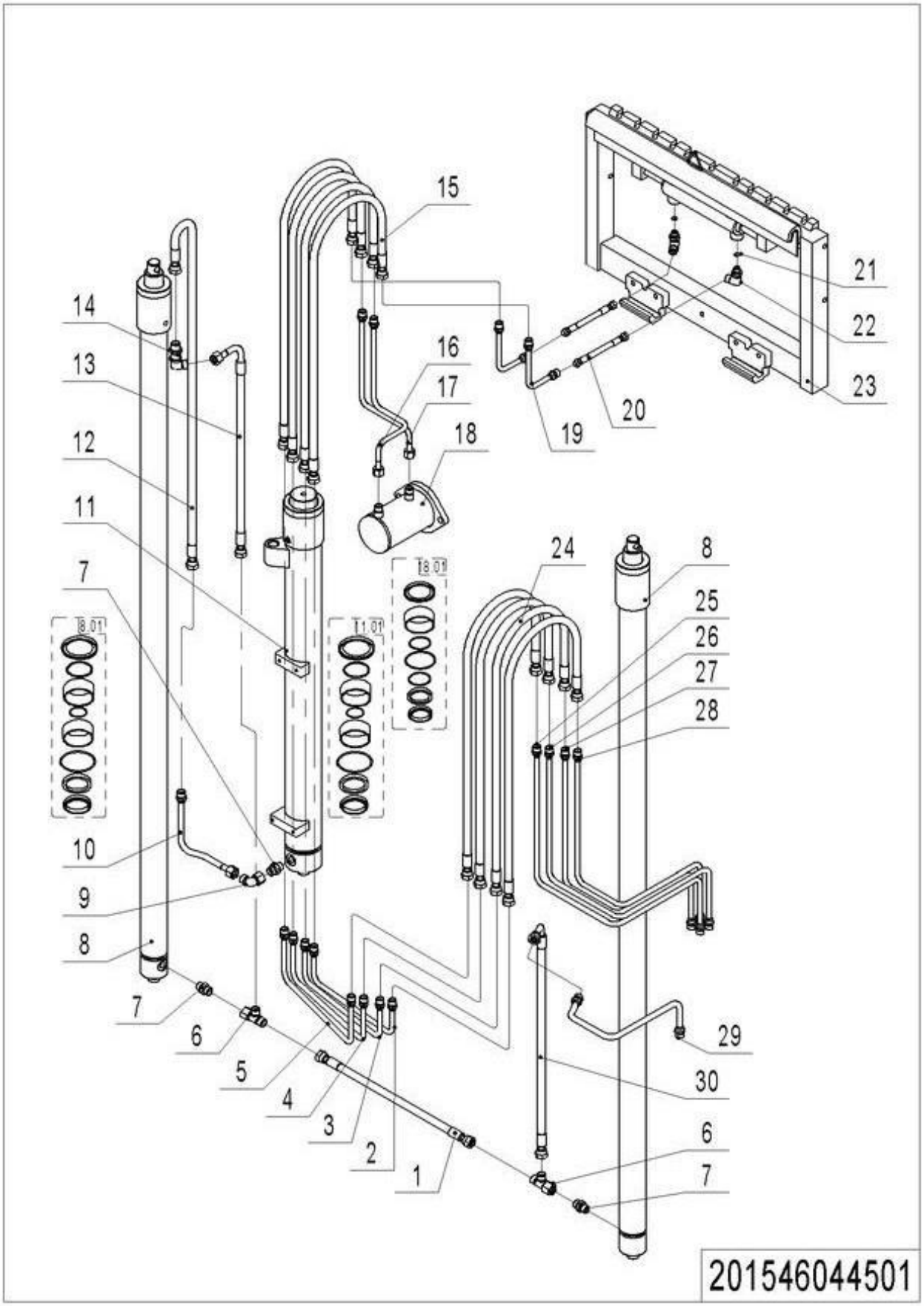


1= Supply as package. 2= Supply with constraints. 3= Phasing-out supply. 4= Supply as assembly. 5= Check other tables.

## 10 Triple Mast Hydraulic Circuit 4 (201546044502)

| No. | Item Code | Mark | Item Description | Qty. | Substitute | Note |
|---|---|---|---|---|---|---|
| 1 | 201544520034 | | Hose | 1 | | |
| 2 | 201530520003 | | Steel Tube | 1 | | |
| 3 | 201530520002 | | Steel Tube | 1 | | |
| 4 | 201530520001 | | Steel Tube | 1 | | |
| 5 | 201530520000 | | Steel Tube | 1 | | |
| 6 | 950401000001 | | Joint | 2 | | |
| 7 | 951000600001 | | Explosion Proof Valve | 3 | | |
| 8 | 201544510010 | | Cylinder | 2 | | 4800 |
| 8 | 201544510011 | | Cylinder | 2 | | 4500 |
| 8 | 201544510012 | | Cylinder | 2 | | 3600 |
| 8.01 | 201598510003 | | Seal Kit | 1 | | |
| 9 | 950400200004 | | Joint | 1 | | |
| 10 | 201544520033 | | Steel Tube | 1 | | |
| 11 | 201544510013 | | Cylinder | 1 | | 4800 |
| 11 | 201544510014 | | Cylinder | 1 | | 4500 |
| 11 | 201544510015 | | Cylinder | 1 | | 3600 |
| 11.01 | 201598510002 | | Seal Kit | 1 | | |
| 12 | 201544520036 | | Hose | 1 | | 4800 |
| 12 | 201044520082 | | Hose | 1 | | 4500 |
| 12 | 201044520083 | | Hose | 1 | | 3600 |
| 13 | 201544520037 | | Hose | 1 | | 4800 |
| 13 | 201044520084 | | Hose | 1 | | 4500 |
| 13 | 201044520085 | | Hose | 1 | | 3600 |
| 14 | 950400600003 | | Joint | 1 | | |
| 15 | 201043020015 | | Hose | 4 | | 4800 |
| 15 | 201044520080 | | Hose | 4 | | 4500 |
| 15 | 201044520092 | | Hose | 4 | | 3600 |
| 16 | 201044520073 | | Steel Tube | 1 | | |
| 17 | 201044520074 | | Steel Tube | 1 | | |
| 18 | 201520510000 | | Cylinder | 1 | | |

**1= Supply as package. 2= Supply with constraints. 3= Phasing-out supply. 4= Supply as assembly. 5= Check other tables.**

# 10 Triple Mast Hydraulic Circuit 4 (201546044502) Continuation

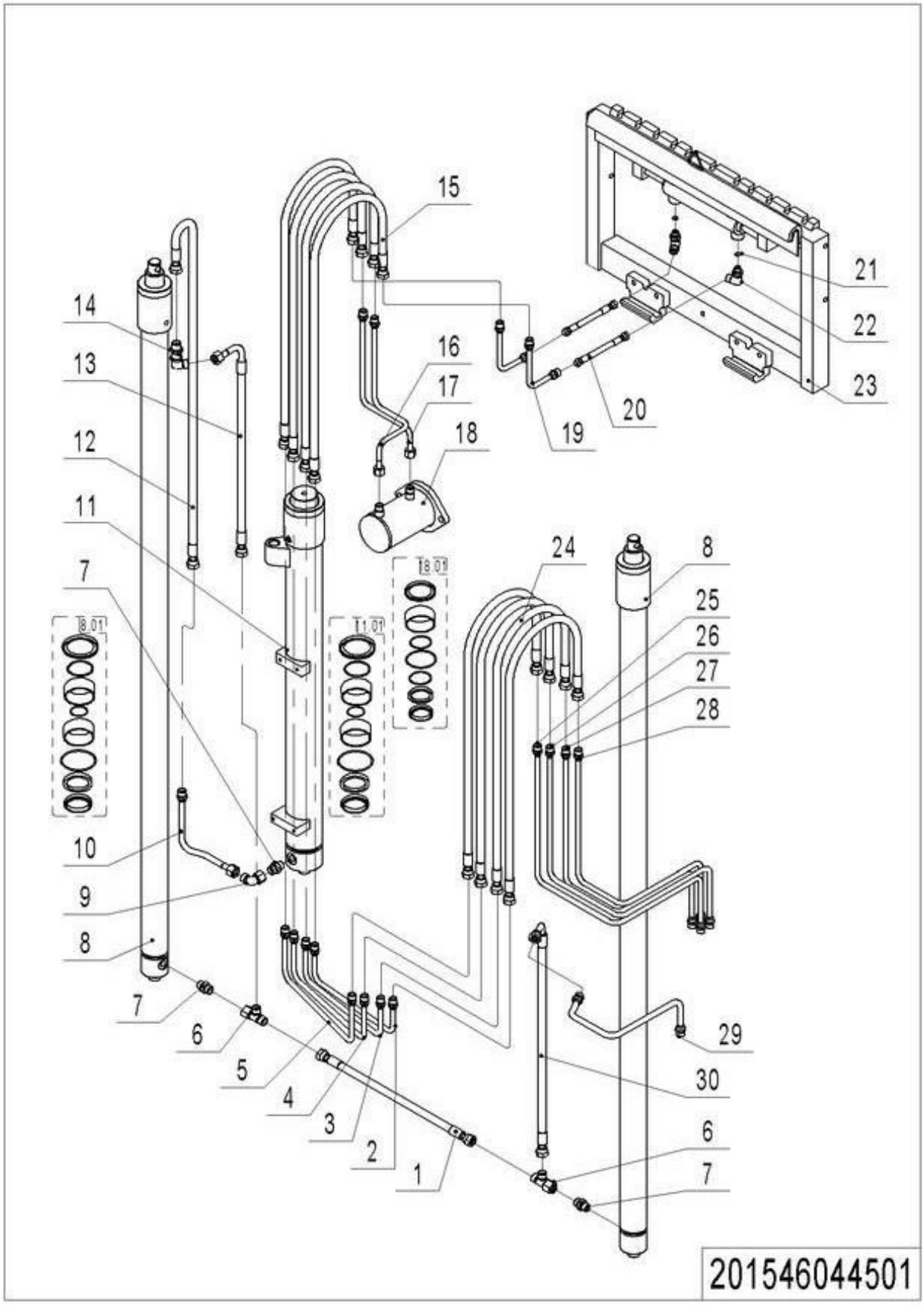


1= Supply as package. 2= Supply with constraints. 3= Phasing-out supply. 4= Supply as assembly. 5= Check other tables.

# 10 Triple Mast Hydraulic Circuit 4 (201546044502) Continuation

| No. | Item Code | Mark | Item Description | Qty. | Substitute | Note |
|---|---|---|---|---|---|---|
| 18.01 | 201598510004 | | Seal Kit | 1 | | |
| 19 | 201030520012 | | Steel Tube | 2 | | |
| 20 | 201030520013 | | Hose | 2 | | |
| 21 | 201030520014 | 1 | Damper | 2 | | |
| 22 | 950401100003 | | Joint | 2 | | |
| 23 | 940100200008 | | Side Shifter | 1 | | |
| 24 | 201544520035 | | Hose | 2 | | 4800 |
| 24 | 201044520078 | | Hose | 2 | | 4500 |
| 24 | 201044520092 | | Hose | 2 | | 3600 |
| 25 | 201030520001 | | Steel Tube | 1 | | |
| 26 | 201030520000 | | Steel Tube | 1 | | |
| 27 | 201044520071 | | Steel Tube | 1 | | |
| 28 | 201044520072 | | Steel Tube | 1 | | |
| 29 | 201044520070 | | Steel Tube | 1 | | |
| 30 | 201044520087 | | Hose | 1 | | |

**1= Supply as package. 2= Supply with constraints. 3= Phasing-out supply. 4= Supply as assembly. 5= Check other tables.**

## 11 Oil Tank (201546019001)

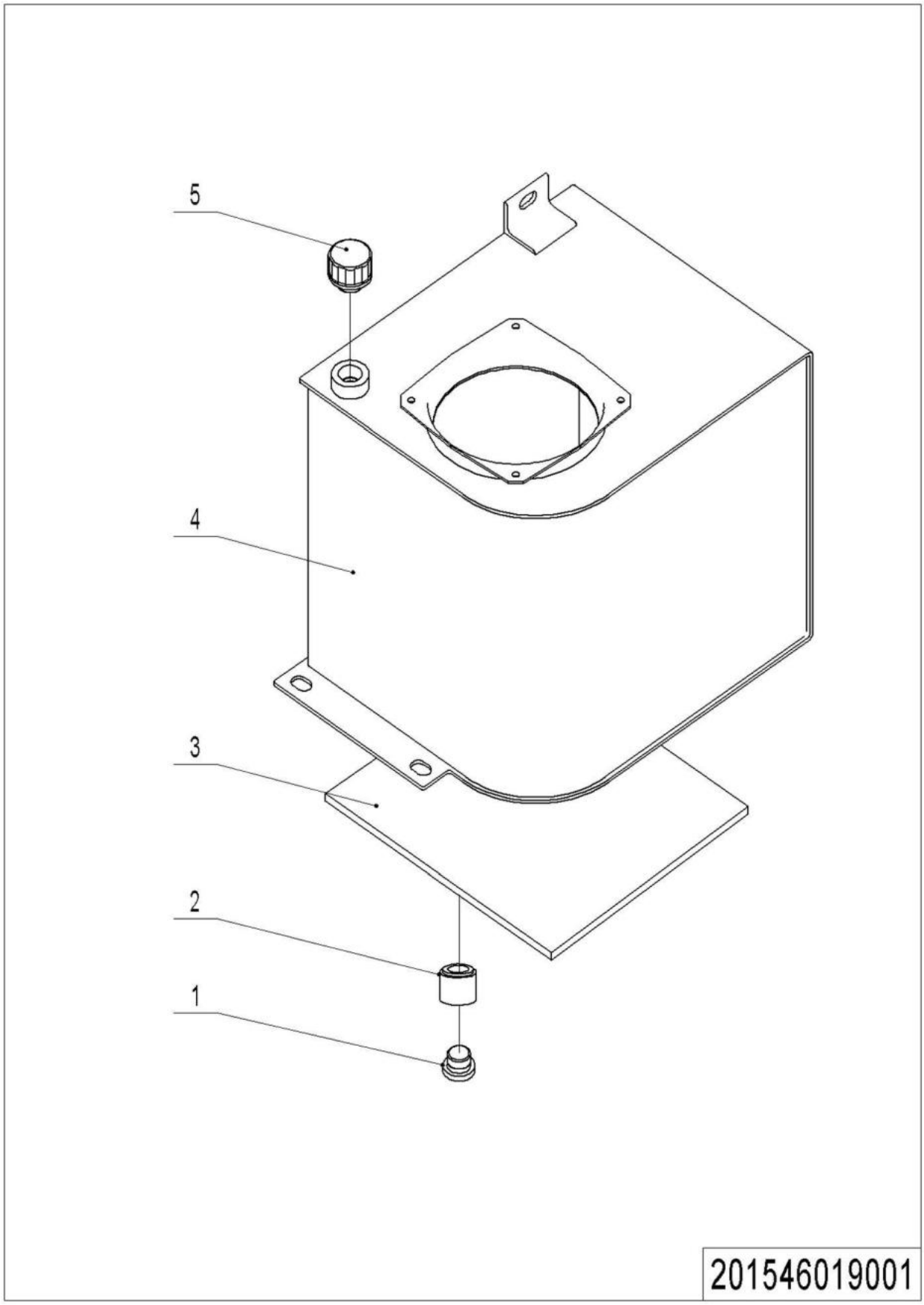


**1= Supply as package. 2= Supply with constraints. 3= Phasing-out supply. 4= Supply as assembly. 5= Check other tables.**

## 11 Oil Tank (201546019001)

| No. | Item Code | Mark | Item Description | Qty. | Substitute | Note |
|---|---|---|---|---|---|---|
| 1 | 911300100001 | 1 | Screw Plug | 1 | | |
| 2 | 910800900005 | 1 | Bonded Washer | 1 | | |
| 3 | 201019020004 | | Rubber Mat | 1 | | |
| 4 | 201019010000 | | Tank | 1 | | |
| 5 | 951100200001 | 1 | Screw Plug | 1 | | |

**1= Supply as package. 2= Supply with constraints. 3= Phasing-out supply. 4= Supply as assembly. 5= Check other tables.**

## 12 Pump Unit (3.0Kw, 3.3cc) (532646023502)

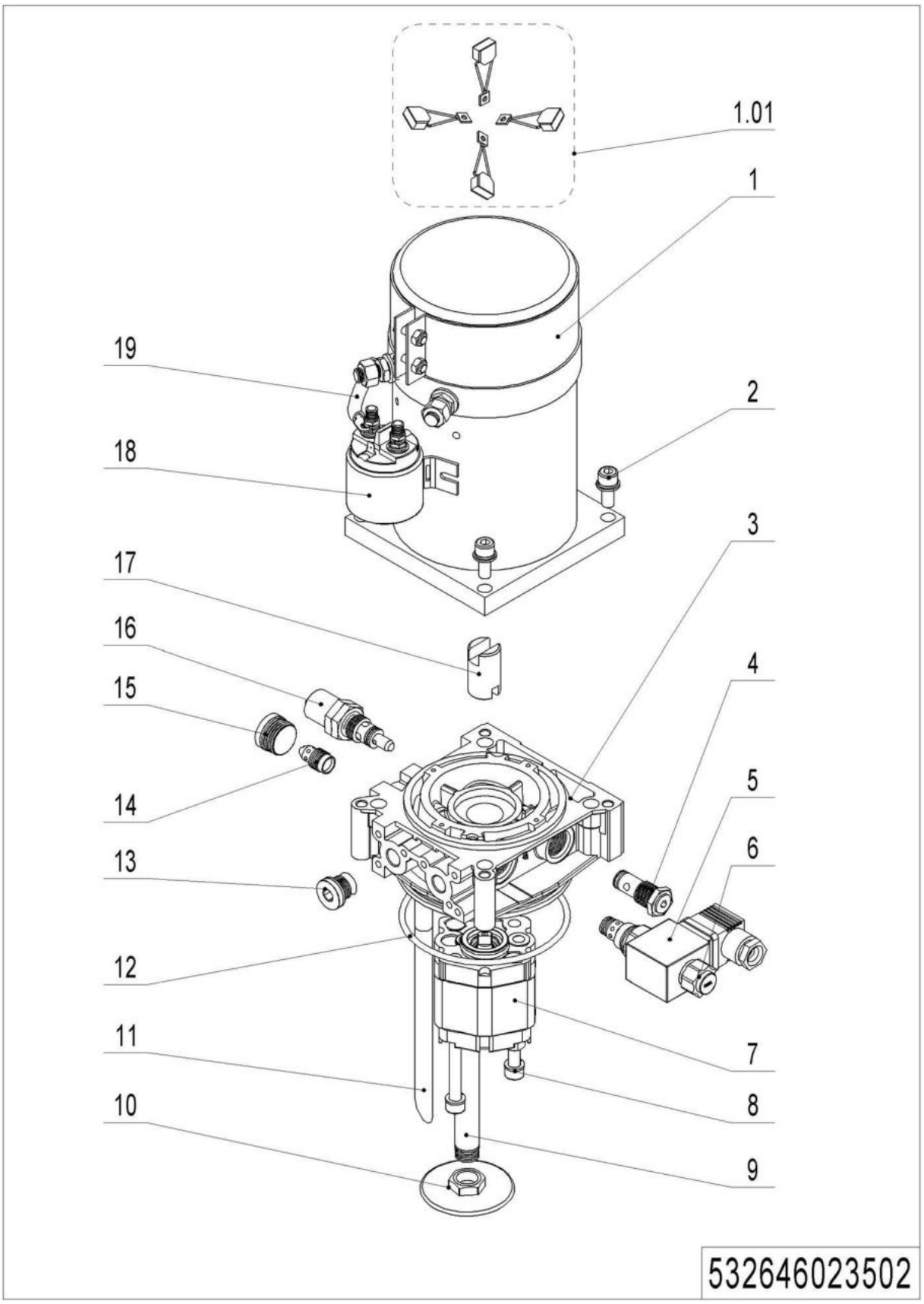


**1= Supply as package. 2= Supply with constraints. 3= Phasing-out supply. 4= Supply as assembly. 5= Check other tables.**

## 12 Pump Unit (3.0Kw, 3.3cc) (532646023502)

| No. | Item Code | Mark | Item Description | Qty. | Substitute | Note |
|---|---|---|---|---|---|---|
| -- | 950900100064 | | Pump Unit | 1 | | |
| 1 | 532698510013 | | Motor | 1 | | |
| 1.01 | 532698510029 | | Carbon Brush | 1 | | |
| 2 | 532698520053 | | Screw | 4 | | |
| 3 | 532698520055 | | Valve Block | 1 | | |
| 4 | 532698510016 | | Check Valve | 1 | | |
| 5 | 532698510014 | | Coil | 1 | | |
| 6 | 532698510015 | | Magnetic Valve | 1 | | |
| 7 | 532698510022 | | Gear Pump | 1 | | |
| 8 | 532698520066 | | Screw | 2 | | |
| 9 | 532698520058 | | Oil Tube | 1 | | |
| 10 | 532698520059 | | Filter | 1 | | |
| 11 | 532698520060 | | Pipe | 1 | | |
| 12 | 532698520056 | | O-Ring | 1 | | |
| 13 | 532698520062 | | End Cap | 1 | | |
| 14 | 532698510023 | | Valve | 1 | | |
| 15 | 532698520061 | | End Cap | 1 | | |
| 16 | 532698510018 | | Overflow Valve | 1 | | |
| 17 | 532698520054 | | Coupling | 1 | | |
| 18 | 532698510020 | | Switch | 1 | | |
| 19 | 532698510021 | | Cables | 1 | | |

**1= Supply as package. 2= Supply with constraints. 3= Phasing-out supply. 4= Supply as assembly. 5= Check other tables.**

## 13 Pump Unit (2.2KW, 2.0cc) (532646023503)

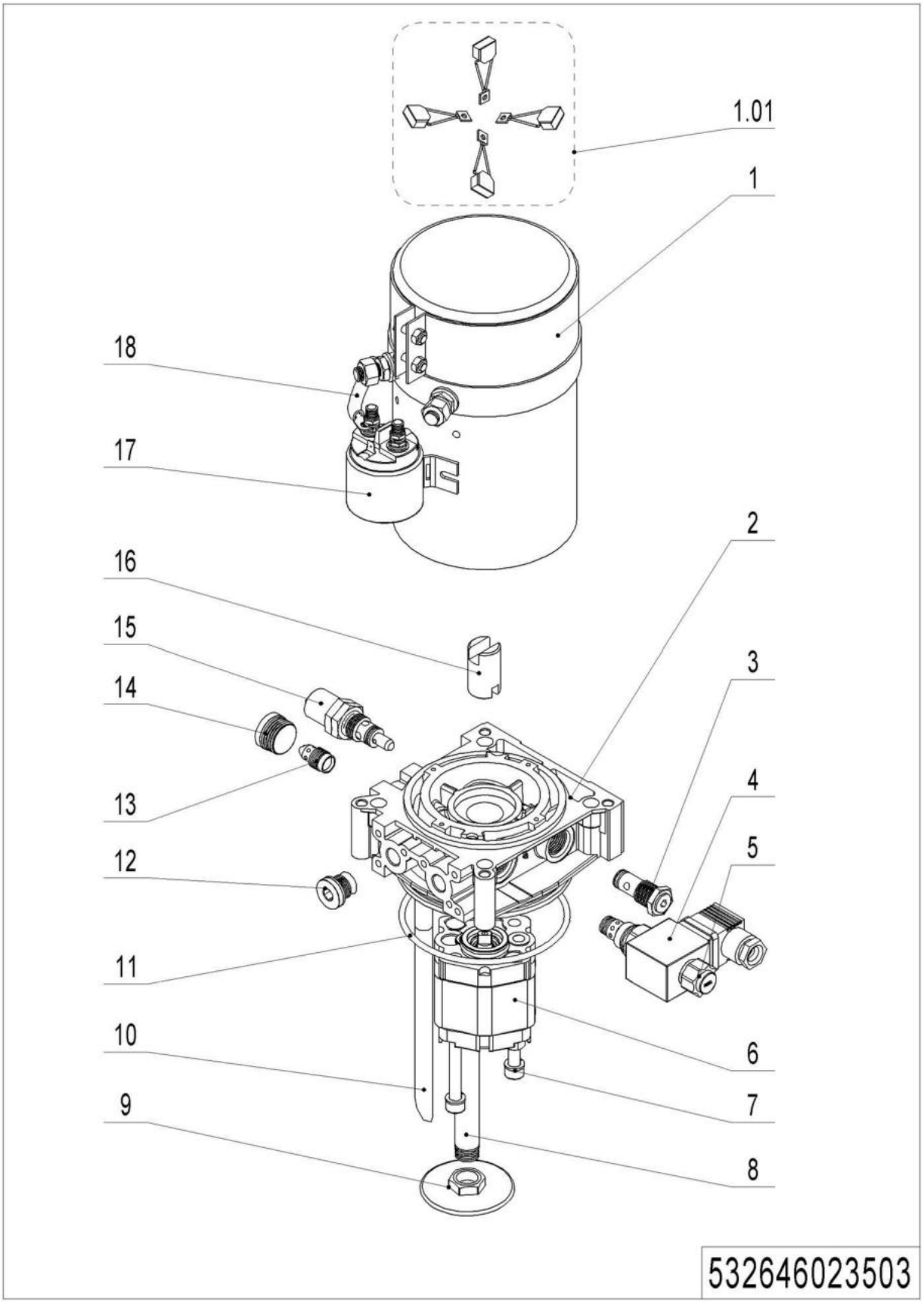


**1= Supply as package. 2= Supply with constraints. 3= Phasing-out supply. 4= Supply as assembly. 5= Check other tables.**

## 13 Pump Unit (2.2KW, 2.0cc) (532646023503)

| No. | Item Code | Mark | Item Description | Qty. | Substitute | Note |
|---|---|---|---|---|---|---|
| -- | 950900100070 | | Pump Unit | 1 | | |
| 1 | 532698510024 | | Motor | 1 | | |
| 1.01 | 532698510030 | | Carbon Brush | 1 | | |
| 2 | 532698520065 | | Valve Block | 1 | | |
| 3 | 532698510016 | | Check Valve | 1 | | |
| 4 | 532698510014 | | Coil | 1 | | |
| 5 | 532698510015 | | Magnetic Valve | 1 | | |
| 6 | 532698510026 | | Gear Unit | 1 | | |
| 7 | 532698520057 | | Screw | 2 | | |
| 8 | 532698520058 | | Oil Tube | 1 | | |
| 9 | 532698520059 | | Filter | 1 | | |
| 10 | 532698520060 | | Pipe | 1 | | |
| 11 | 532698520056 | | O-Ring | 1 | | |
| 12 | 532698520062 | | End Cap | 1 | | |
| 13 | 532698510027 | | Valve | 1 | | |
| 14 | 532698520061 | | End Cap | 1 | | |
| 15 | 532698510018 | | Overflow Valve | 1 | | |
| 16 | 532698520067 | | Coupling | 1 | | |
| 17 | 532698510020 | | Switch | 1 | | |
| 18 | 532698510025 | | Cables | 1 | | |

**1= Supply as package. 2= Supply with constraints. 3= Phasing-out supply. 4= Supply as assembly. 5= Check other tables.**

# Chapter3：Truck Frame

## 01 Chassis (201546021501)

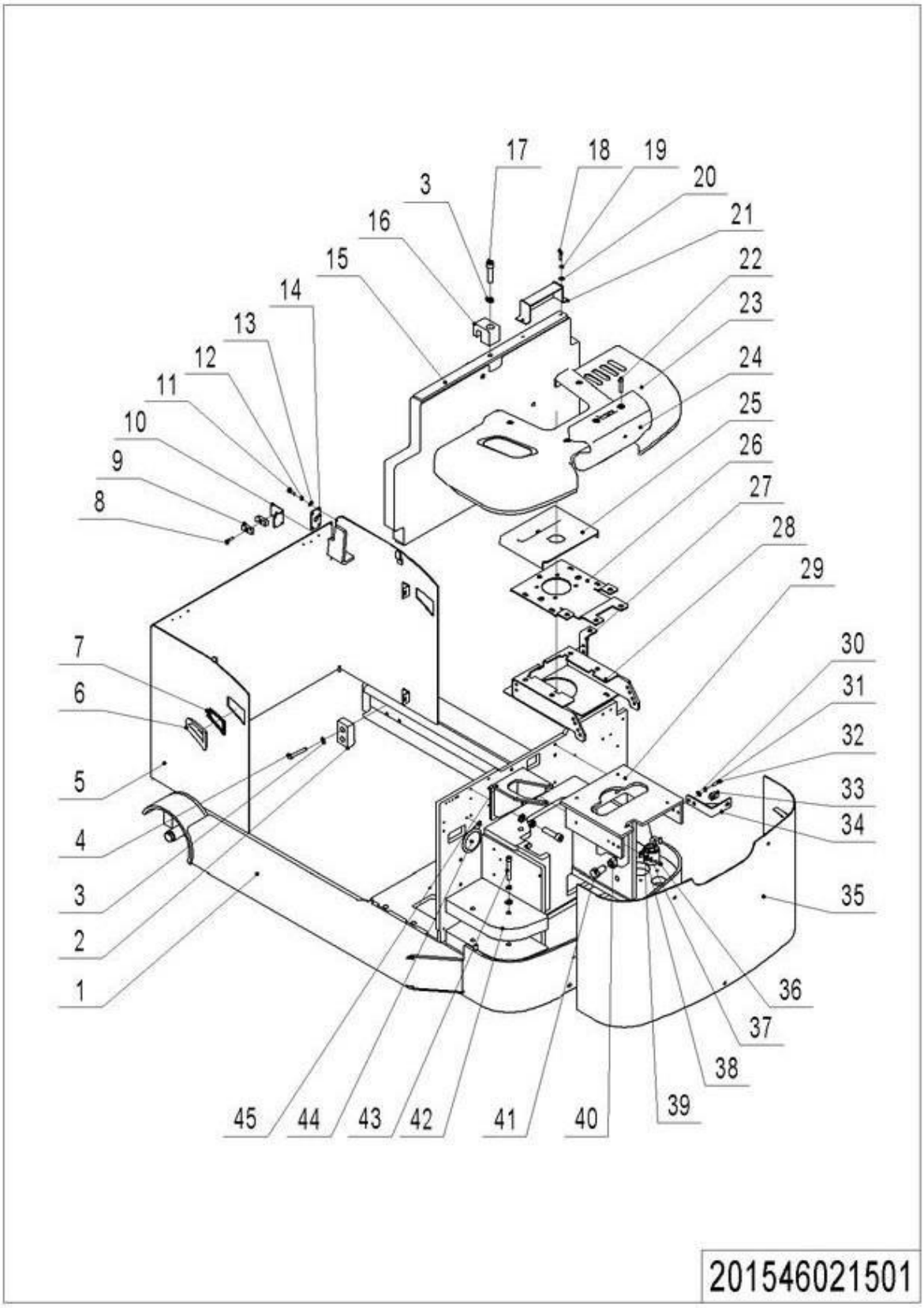


1= Supply as package. 2= Supply with constraints. 3= Phasing-out supply. 4= Supply as assembly. 5= Check other tables.

## 01 Chassis (201546021501)

| No. | Item Code | Mark | Item Description | Qty. | Substitute | Note |
|---|---|---|---|---|---|---|
| 1 | 201521510000 | | Chassis | 1 | | |
| 2 | 216521520001 | | Crash Pad | 2 | | |
| 3 | 910400500008 | 1 | Spring Washer | 12 | | |
| 4 | 910200200098 | 1 | Screw | 8 | | |
| 5 | 201521510001 | | Apron | 1 | | |
| 6 | 505621510003 | | Vent Kit | 2 | | |
| 7 | 505621510004 | | Vent Kit | 2 | | |
| 8 | 910200200058 | 1 | Screw | 13 | | |
| 9 | 201044520027 | 1 | Pipe Clip | 2 | | |
| 10 | 201021520039 | | Mounting Plate | 2 | | |
| 11 | 910200200032 | 1 | Screw | 8 | | |
| 12 | 910400500005 | 1 | Spring Washer | 8 | | |
| 13 | 910400100005 | 1 | Flat Washer | 8 | | |
| 14 | 201021520035 | | Mounting Plate | 1 | | |
| 15 | 201021510008 | | Balance Weight | 1 | | |
| 16 | 201021520044 | | Stop Block | 1 | | |
| 17 | 910200200102 | 1 | Screw | 2 | | |
| 18 | 910200200053 | 1 | Screw | 2 | | |
| 19 | 910400500006 | 1 | Spring Washer | 8 | | |
| 20 | 910400100006 | 1 | Flat Washer | 11 | | |
| 21 | 201021510002 | | Protective Cover | 1 | | |
| 22 | 941100100006 | 1 | Screw | 10 | | |
| 23 | 201021520036 | | Protective Cover | 1 | | |
| 24 | 505621520025 | | Protective Cover | 1 | | |
| 24 | 505621520043 | | Protective Cover | 1 | | Without Guard Arm |
| 25 | 206021520034 | | Protective Cover | 1 | | |
| 26 | 201021520027 | | Plate | 1 | | |
| 27 | 201021520026 | | Fixing Mount | 2 | | |
| 28 | 201021510003 | | Bracket | 1 | | |
| 29 | 201021510005 | | Bracket | 1 | | |
| 30 | 910400100007 | 1 | Flat Washer | 24 | | |

**1= Supply as package. 2= Supply with constraints. 3= Phasing-out supply. 4= Supply as assembly. 5= Check other tables.**

## 01 Chassis (201546021501) Continuation

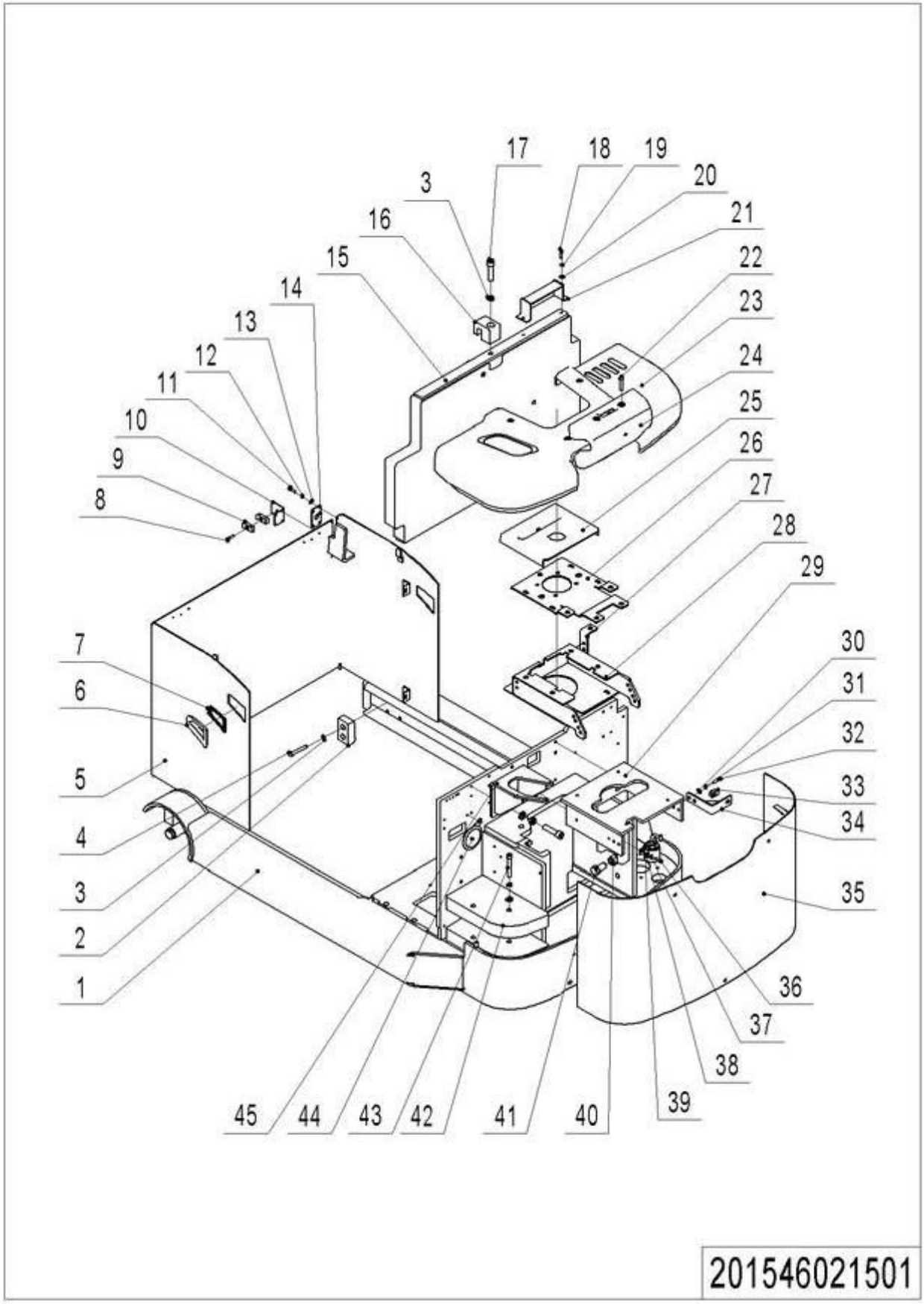


1= Supply as package. 2= Supply with constraints. 3= Phasing-out supply. 4= Supply as assembly. 5= Check other tables.

## 01 Chassis (201546021501) Continuation

| No. | Item Code | Mark | Item Description | Qty. | Substitute | Note |
|---|---|---|---|---|---|---|
| 31 | 910400500007 | 1 | Spring Washer | 24 | | |
| 32 | 910200200075 | 1 | Screw | 16 | | |
| 33 | 940400400003 | 1 | Cage Nut | 11 | | |
| 34 | 201021510004 | | Fixing Mount | 2 | | |
| 35 | 201021510006 | | Apron | 1 | | |
| 36 | 532698510020 | | Switch | 1 | | |
| 37 | 910100300004 | | Bolt | 2 | | |
| 38 | 910400500004 | 1 | Spring Washer | 2 | | |
| 39 | 910400100004 | 1 | Flat Washer | 2 | | |
| 40 | 910100100052 | | Bolt | 2 | | |
| 41 | 202021520006 | | Balance Weight | 1 | | |
| 42 | 910300100012 | 1 | Nut | 3 | | |
| 43 | 910100100118 | 1 | Bolt | 3 | | |
| 44 | 201021520040 | | Balance Weight | 2 | | |
| 45 | 910100100061 | 1 | Bolt | 2 | | |
| 46 | 920500100001 | | Horn | 1 | | |
| 47 | 201021510007 | | Bracket | 1 | | |

**1= Supply as package. 2= Supply with constraints. 3= Phasing-out supply. 4= Supply as assembly. 5= Check other tables.**

## 02 Chassis (Side Extraction Battery) (201546021502)

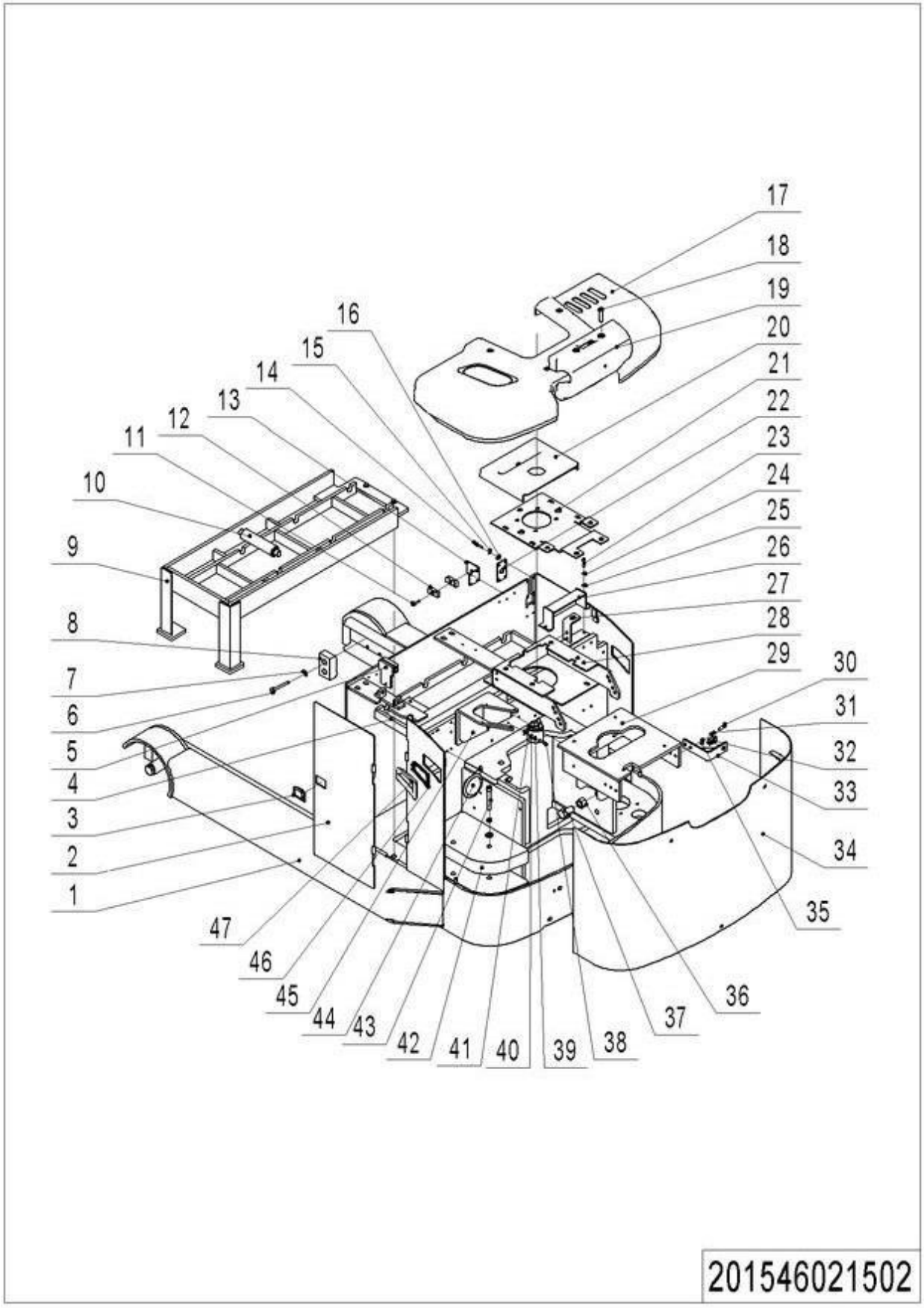


1= Supply as package. 2= Supply with constraints. 3= Phasing-out supply. 4= Supply as assembly. 5= Check other tables.

## 02 Chassis (Side Extraction Battery) (201546021502)

| No. | Item Code | Mark | Item Description | Qty. | Substitute | Note |
|---|---|---|---|---|---|---|
| 1 | 201521510002 | | Chassis | 1 | | |
| 2 | 203021510003 | | Door | 1 | | |
| 3 | 940800300002 | | Panel Lock | 1 | | |
| 4 | 203012510000 | | Battery Rack | 1 | | |
| 5 | 203021510002 | | Baffle | 1 | | |
| 6 | 910200200098 | 1 | Screw | 8 | | |
| 7 | 910400500008 | 1 | Spring Washer | 10 | | |
| 8 | 216521520001 | | Crash Pad | 2 | | |
| 9 | 203021510004 | | Bracket | 1 | | |
| 10 | 232021501002 | | Roller | 8 | | |
| 11 | 910200200058 | 1 | Screw | 10 | | |
| 12 | 201044520027 | 1 | Pipe Clip | 2 | | |
| 13 | 201021520039 | | Mounting Plate | 1 | | |
| 14 | 910200200032 | 1 | Screw | 8 | | |
| 15 | 910400500005 | 1 | Spring Washer | 8 | | |
| 16 | 910400100005 | 1 | Flat Washer | 8 | | |
| 17 | 201021520036 | | Protective Cover | 1 | | |
| 18 | 941100100006 | 1 | Screw | 10 | | |
| 19 | 505621520025 | | Protective Cover | 1 | | |
| 20 | 206021520034 | | Protective Cover | 1 | | |
| 21 | 201021520027 | | Plate | 1 | | |
| 22 | 201021520035 | | Mounting Plate | 1 | | |
| 23 | 910200200053 | 1 | Screw | 2 | | |
| 24 | 910400500006 | 1 | Spring Washer | 10 | | |
| 25 | 910400100006 | 1 | Flat Washer | 2 | | |
| 26 | 201021510002 | | Protective Cover | 1 | | |
| 27 | 201021520026 | | Fixing Mount | 2 | | |
| 28 | 201021510003 | | Bracket | 1 | | |
| 29 | 201021510005 | | Bracket | 1 | | |
| 30 | 910200200075 | 1 | Screw | 16 | | |

**1= Supply as package. 2= Supply with constraints. 3= Phasing-out supply. 4= Supply as assembly. 5= Check other tables.**

## 02 Chassis (Side Extraction Battery) (201546021502) Continuation

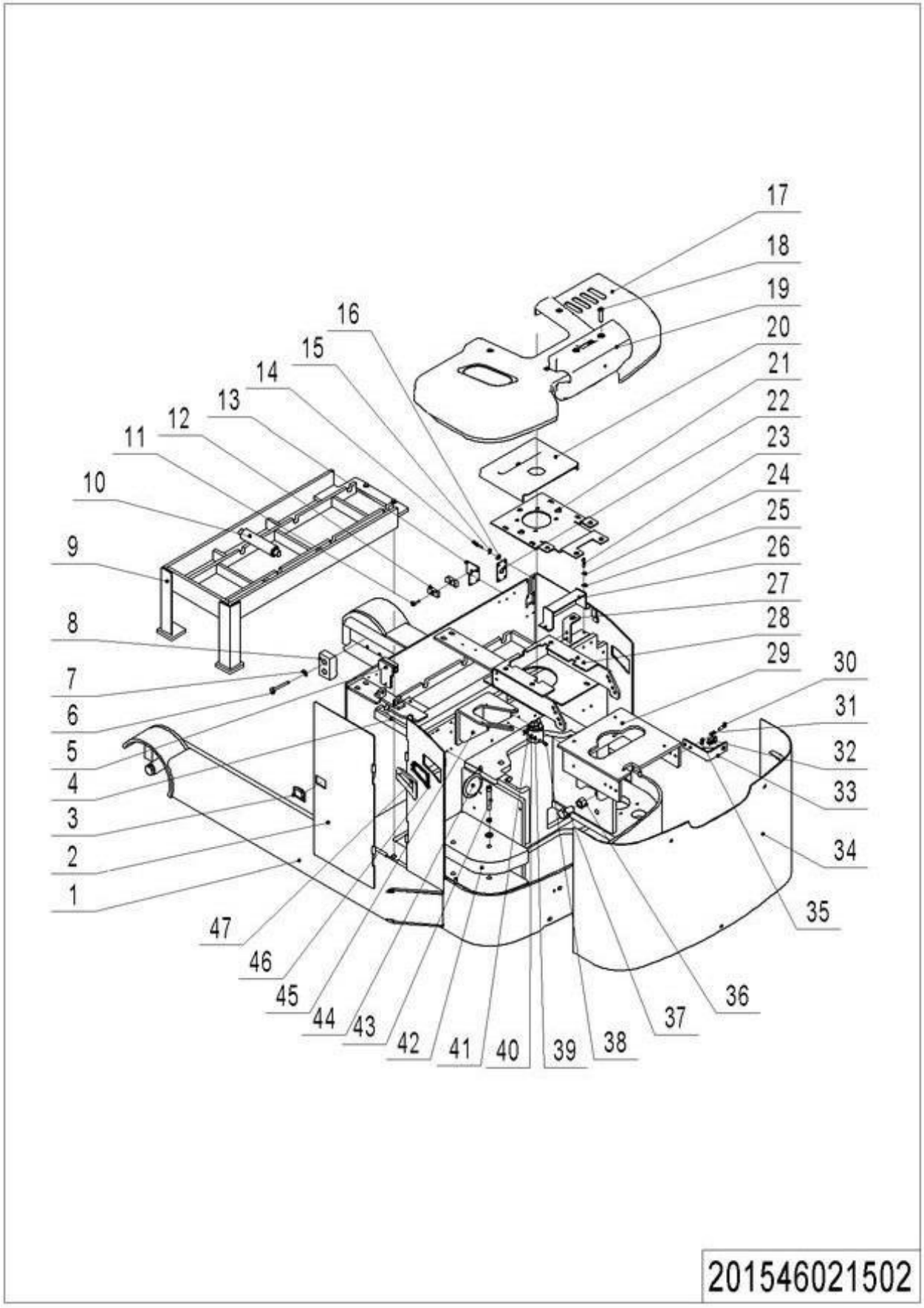


1= Supply as package. 2= Supply with constraints. 3= Phasing-out supply. 4= Supply as assembly. 5= Check other tables.

## 02 Chassis (Side Extraction Battery) (201546021502) Continuation

| No. | Item Code | Mark | Item Description | Qty. | Substitute | Note |
|---|---|---|---|---|---|---|
| 31 | 910400500007 | 1 | Spring Washer | 24 | | |
| 32 | 940400400003 | 1 | Cage Nut | 11 | | |
| 33 | 201021510004 | | Fixing Mount | 2 | | |
| 34 | 201021510006 | | Apron | 1 | | |
| 35 | 910400100007 | 1 | Flat Washer | 24 | | |
| 36 | 910300100012 | 1 | Nut | 3 | | |
| 37 | 910100100118 | 1 | Bolt | 3 | | |
| 38 | 532698510020 | | Switch | 1 | | |
| 39 | 910100300004 | 1 | Bolt | 2 | | |
| 40 | 910400500004 | 1 | Spring Washer | 2 | | |
| 41 | 910400100004 | 1 | Flat Washer | 2 | | |
| 42 | 201021520040 | | Balance Weight | 2 | | |
| 43 | 910100100061 | 1 | Bolt | 2 | | |
| 44 | 920500100001 | | Horn | 1 | | |
| 45 | 201021510007 | | Bracket | 1 | | |
| 46 | 505621510004 | | Vent Kit | 2 | | |
| 47 | 505621510003 | | Vent Kit | 2 | | |

**1= Supply as package. 2= Supply with constraints. 3= Phasing-out supply. 4= Supply as assembly. 5= Check other tables.**

## Chapter4: Mast

## 01 Outer Mast (Double/ Triple Mast ) (201546044503)

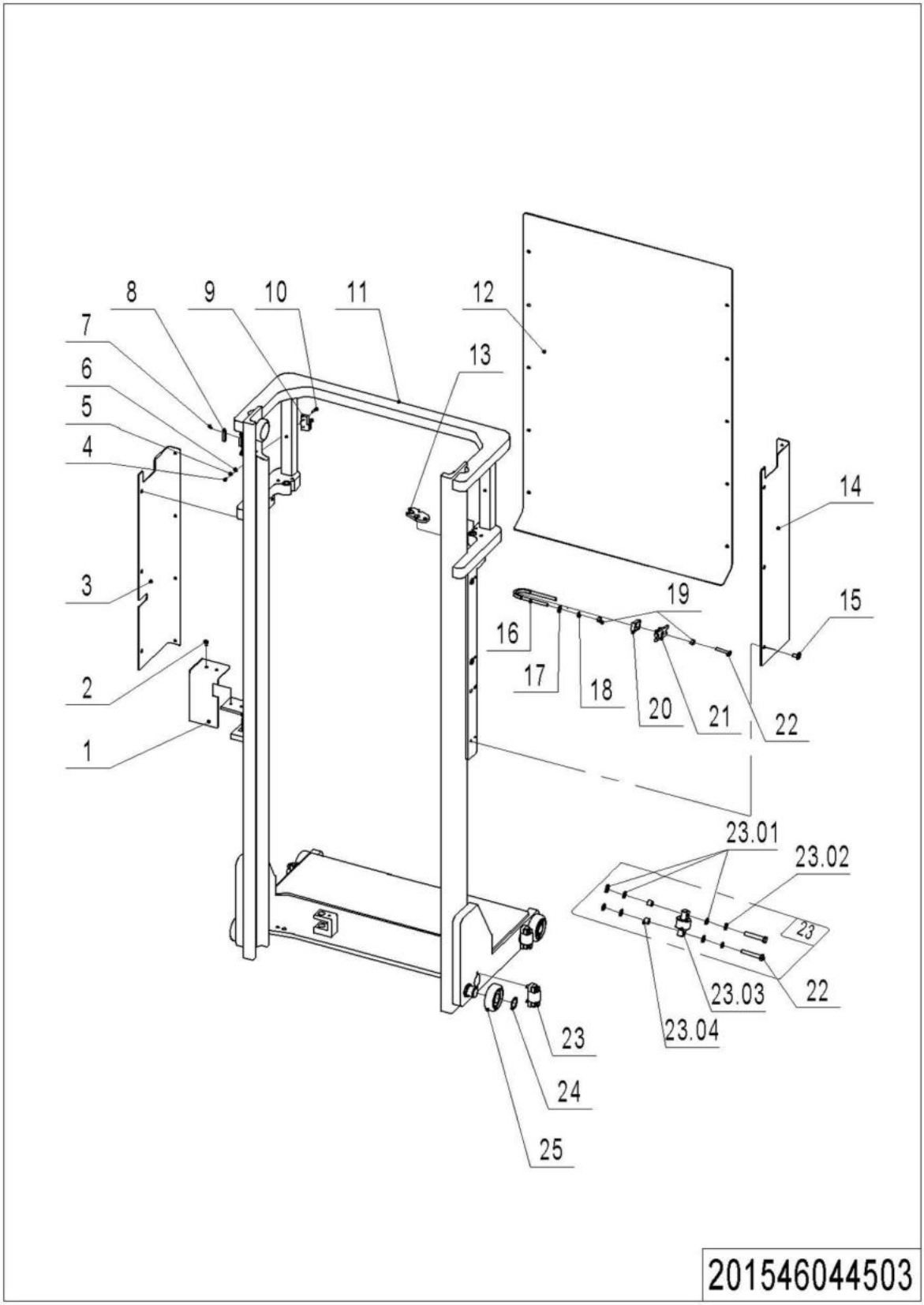


1= Supply as package. 2= Supply with constraints. 3= Phasing-out supply. 4= Supply as assembly. 5= Check other tables.

## 01 Outer Mast (Double/ Triple Mast ) (201546044503)

| No. | Item Code | Mark | Item Description | Qty. | Substitute | Note |
|---|---|---|---|---|---|---|
| 1 | 201044520024 | | Protective Cover | 1 | | |
| 2 | 910200300023 | 1 | Screw | 2 | | |
| 3 | 201544520001 | | Mounting Rack | 1 | | 4800 |
| 3 | 201044520020 | | Mounting Rack | 1 | | 4500 |
| 3 | 201044520021 | | Mounting Rack | 1 | | 3600 |
| 4 | 910300500001 | 1 | Nut | 2 | | |
| 5 | 910400500003 | 1 | Spring Washer | 2 | | |
| 6 | 910400100003 | 1 | Flat Washer | 2 | | |
| 7 | 910200300003 | 1 | Screw | 4 | | |
| 8 | 920200500001 | | Magnetic Switch | 2 | | |
| 9 | 920200300001 | | Microswitch | 1 | | |
| 10 | 910200500028 | 1 | Screw | 2 | | |
| 11 | 201544510000 | | Outer Mast(4800) | 1 | | 4800 |
| 11 | 201544510001 | | Outer Mast(4500) | 1 | | 4500 |
| 11 | 201544510002 | | Outer Mast(3600) | 1 | | 3600 |
| 12 | 201544520002 | | Guard Plate | 1 | | 4800 |
| 12 | 201544520017 | | Guard Plate | 1 | | 4500 |
| 12 | 201544520018 | | Guard Plate | 1 | | 3600 |
| 13 | 201044520029 | | Mounting Plate | 1 | | |
| 14 | 201544520000 | | Mounting Rack | 1 | | 4800 |
| 14 | 201044520018 | | Mounting Rack | 1 | | 4500 |
| 14 | 201044520019 | | Mounting Rack | 1 | | 3600 |
| 15 | 940800700001 | 1 | Rivet | 10 | | |
| 16 | 201044520017 | | Bolt | 2 | | |
| 17 | 910400100007 | 1 | Flat Washer | 12 | | |
| 18 | 910400500007 | 1 | Spring Washer | 12 | | |
| 19 | 910300100007 | 1 | Nut | 3 | | |
| 20 | 255044020129 | | Protective Cover | 2 | | |
| 21 | 255044020130 | | Fixing Base | 2 | | |
| 22 | 910200200079 | 1 | Screw | 10 | | |

**1= Supply as package. 2= Supply with constraints. 3= Phasing-out supply. 4= Supply as assembly. 5= Check other tables.**

# 01 Outer Mast (Double/ Triple Mast ) (201546044503) Continuation

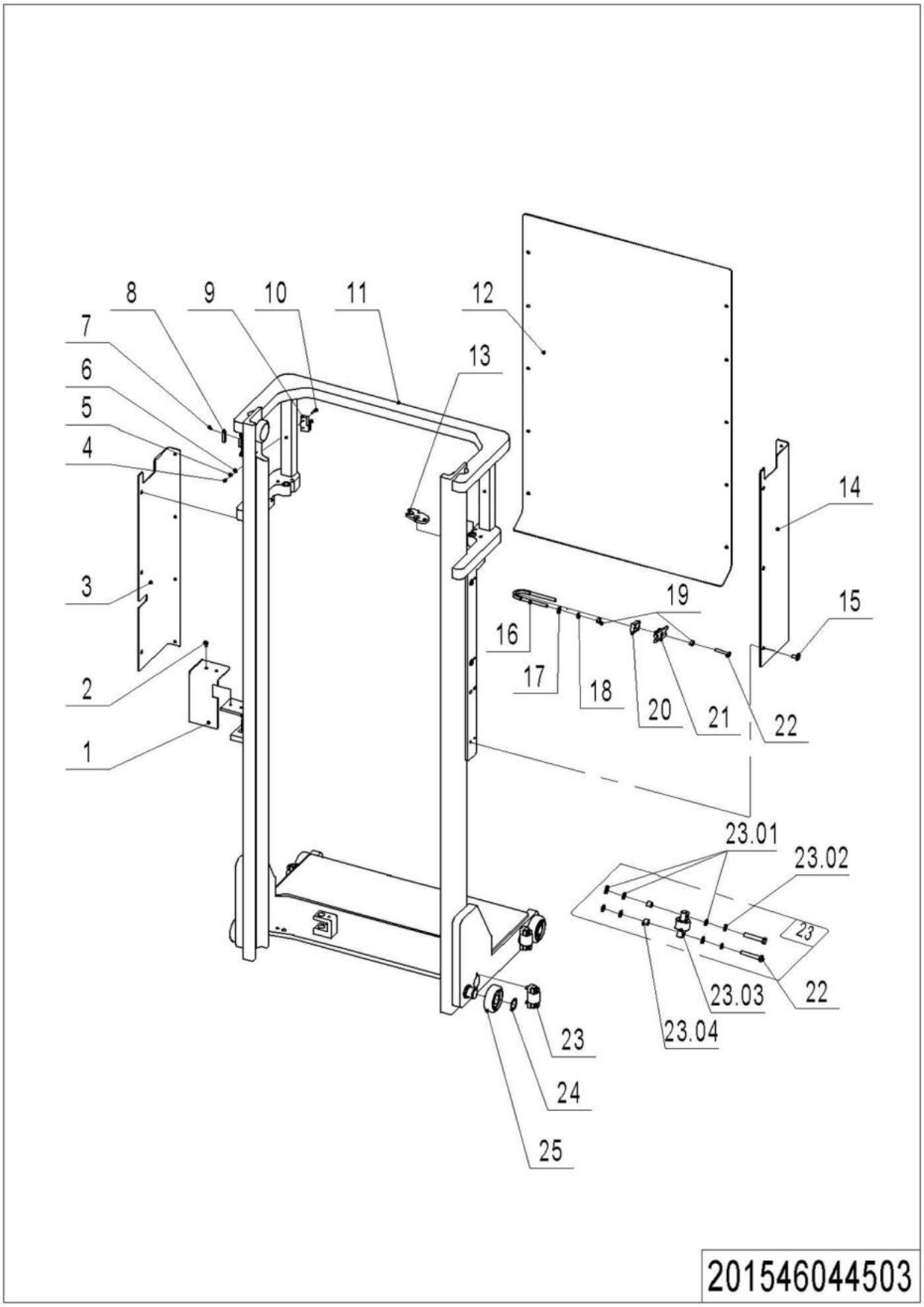


1= Supply as package. 2= Supply with constraints. 3= Phasing-out supply. 4= Supply as assembly. 5= Check other tables.

## 01 Outer Mast (Double/ Triple Mast) (201546044503) Continuation

| No. | Item Code | Mark | Item Description | Qty. | Substitute | Note |
|---|---|---|---|---|---|---|
| 23 | 213098510003 | | Roller | 4 | | |
| 23.01 | 910400100007 | 1 | Flat Washer | 6 | | |
| 23.02 | 910400500007 | 1 | Spring Washer | 2 | | |
| 23.03 | 940200200007 | | Side Roller | 1 | | |
| 23.04 | 940600500017 | 1 | Washer | 2 | | |
| 24 | 910401300018 | 1 | Circlip | 4 | | |
| 25 | 940200100006 | | Main Roller | 4 | | |

**1= Supply as package. 2= Supply with constraints. 3= Phasing-out supply. 4= Supply as assembly. 5= Check other tables.**

## 02 Middle Mast (Triple Mast) (201546044504)

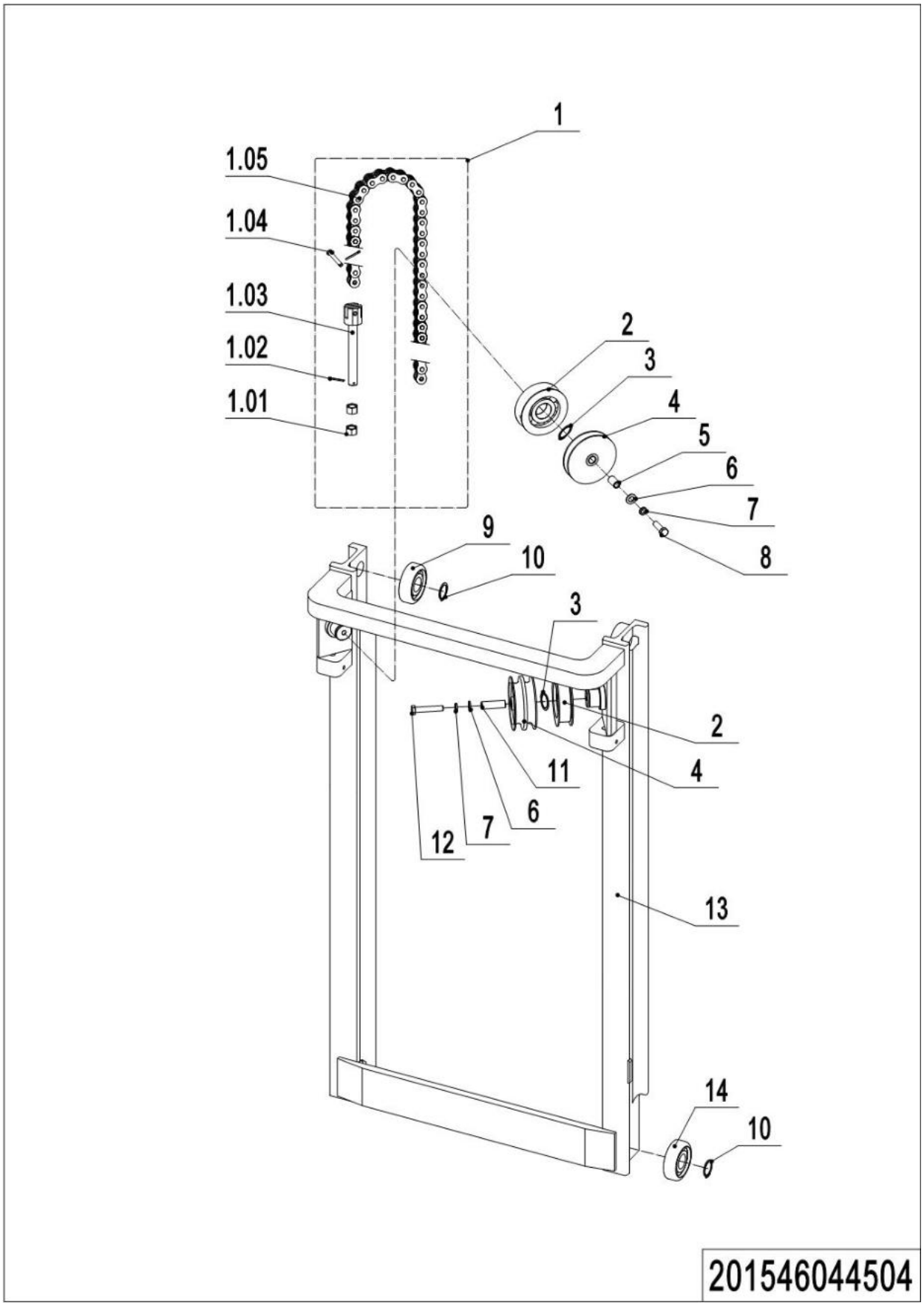


**1= Supply as package. 2= Supply with constraints. 3= Phasing-out supply. 4= Supply as assembly. 5= Check other tables.**

## 02 Middle Mast (Triple Mast) (201546044504)

| No. | Item Code | Mark | Item Description | Qty. | Substitute | Note |
|---|---|---|---|---|---|---|
| 1 | 201544510009 | | Chain | 2 | | 4800 |
| 1 | 201044510012 | | Chain | 2 | | 4500 |
| 1 | 201044510013 | | Chain | 2 | | 3600 |
| 1.01 | 910300200008 | 1 | Nut | 2 | | |
| 1.02 | 910600600030 | 1 | Cotter Pin | 2 | | |
| 1.03 | 532644020096 | | Chain Anchor | 1 | | |
| 1.04 | 910600700029 | 1 | Pin | 2 | | |
| 1.05 | 201544510017 | | Chain | 1 | | |
| 1.05 | 201044510017 | | Chain | 1 | | |
| 1.05 | 201044510019 | | Chain | 1 | | |
| 2 | 940200500001 | | Sprocket Bearing | 2 | | |
| 3 | 910401300020 | | Circlip | 2 | | |
| 4 | 201044520040 | | Pulley | 3 | | |
| 5 | 201044520041 | 1 | Sleeve | 1 | | |
| 6 | 910400100008 | 1 | Flat Washer | 2 | | |
| 7 | 910400500008 | 1 | Spring Washer | 2 | | |
| 8 | 910100300052 | 1 | Bolt | 1 | | |
| 9 | 940200300004 | | Compound Roller | 2 | | |
| 10 | 910401300018 | | Circlip | 4 | | |
| 11 | 201044520039 | 1 | Sleeve | 1 | | |
| 12 | 910100300057 | 1 | Bolt | 1 | | |
| 13 | 201544510003 | | Middle Mast(4800) | 1 | | 4800 |
| 13 | 201544510004 | | Middle Mast(4500) | 1 | | 4500 |
| 13 | 201544510005 | | Middle Mast(3600) | 1 | | 3600 |
| 14 | 940200300007 | | Compound Roller | 2 | | |

**1= Supply as package. 2= Supply with constraints. 3= Phasing-out supply. 4= Supply as assembly. 5= Check other tables.**

## 03 Inner Mast (Triple Mast) (201546044505)

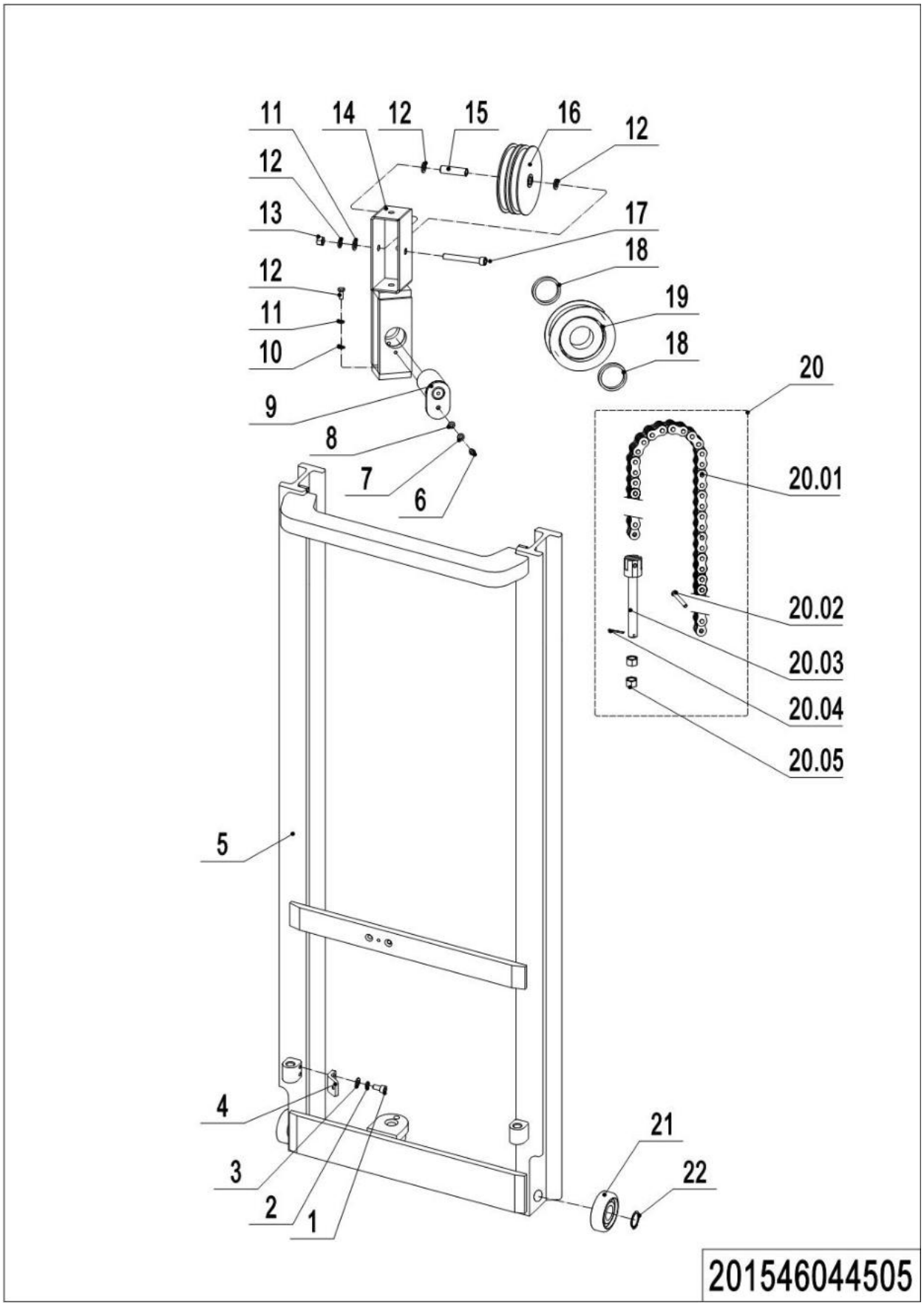


**1= Supply as package. 2= Supply with constraints. 3= Phasing-out supply. 4= Supply as assembly. 5= Check other tables.**

## 03 Inner Mast (Triple Mast) (201546044505)

| No. | Item Code | Mark | Item Description | Qty. | Substitute | Note |
|---|---|---|---|---|---|---|
| 1 | 910200200058 | 1 | Screw | 1 | | |
| 2 | 910400500006 | 1 | Spring Washer | 1 | | |
| 3 | 910400100006 | 1 | Flat Washer | 1 | | |
| 4 | 201044520060 | | Mounting Plate | 1 | | |
| 5 | 201544510006 | | Inner Mast(4800) | 1 | | 4800 |
| 5 | 201544510007 | | Inner Mast(4500) | 1 | | 4500 |
| 5 | 201544510008 | | Inner Mast(3600) | 1 | | 3600 |
| 6 | 910200200058 | 1 | Screw | 1 | | |
| 7 | 910400500006 | 1 | Spring Washer | 1 | | |
| 8 | 910400100006 | 1 | Flat Washer | 1 | | |
| 9 | 201044510000 | | Pin | 1 | | |
| 10 | 910400100008 | 1 | Flat Washer | 1 | | |
| 11 | 910400500008 | 1 | Spring Washer | 4 | | |
| 12 | 910200200098 | 1 | Screw | 1 | | |
| 13 | 910300100008 | 1 | Nut | 1 | | |
| 14 | 201044510001 | | Yoke | 1 | | |
| 15 | 201044520053 | | Sleeve | 1 | | |
| 16 | 201044520040 | | Pulley | 2 | | |
| 17 | 910100100056 | 1 | Bolt | 1 | | |
| 18 | 201044520056 | | Spacer Bush | 2 | | |
| 19 | 940200500007 | | Sprocket Bearing | 1 | | |
| 20 | 201043010000 | | Chain | 1 | | 4800 |
| 20 | 201044510014 | | Chain | 1 | | 4500 |
| 20 | 201044510015 | | Chain | 1 | | 3600 |
| 20.01 | 201043010006 | | Chain | 1 | | |
| 20.01 | 201044510016 | | Chain | 1 | | |
| 20.01 | 201044510018 | | Chain | 1 | | |
| 20.02 | 910600700029 | 1 | Pin | 2 | | |
| 20.03 | 532644020096 | | Chain Anchor | 1 | | |
| 20.04 | 910600600030 | 1 | Cotter Pin | 2 | | |

**1= Supply as package. 2= Supply with constraints. 3= Phasing-out supply. 4= Supply as assembly. 5= Check other tables.**

## 03 Inner Mast (Triple Mast) (201546044505) Continuation

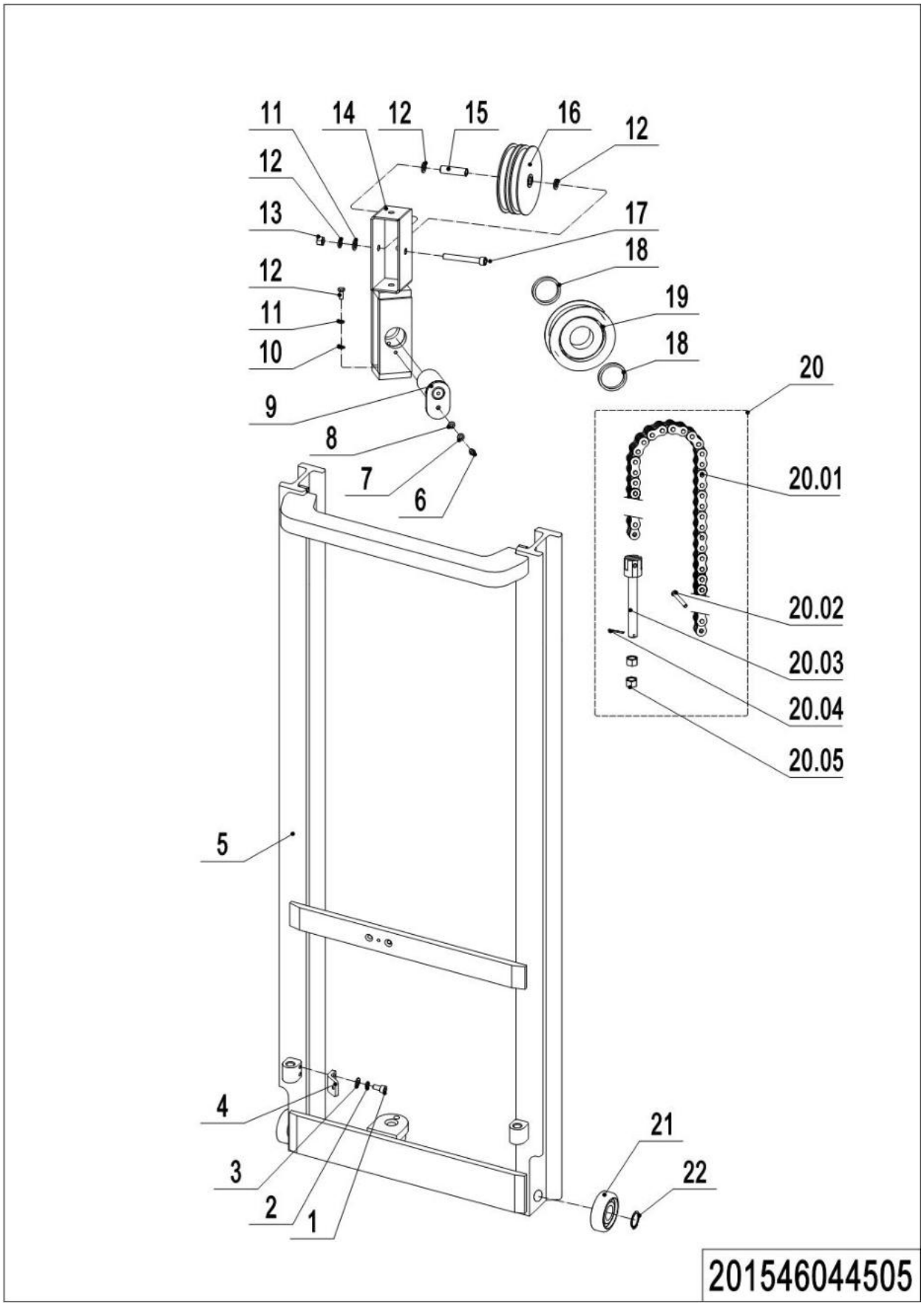


**1= Supply as package. 2= Supply with constraints. 3= Phasing-out supply. 4= Supply as assembly. 5= Check other tables.**

## 03 Inner Mast (Triple Mast) (201546044505) Continuation

| No. | Item Code | Mark | Item Description | Qty. | Substitute | Note |
|---|---|---|---|---|---|---|
| 20.05 | 910300200008 | 1 | Nut | 2 | | |
| 21 | 940200300004 | | Compound Roller | 2 | | |
| 22 | 910401300018 | | Circlip | 2 | | |

## 04 Inner Mast (Double Mast) (201546044003)

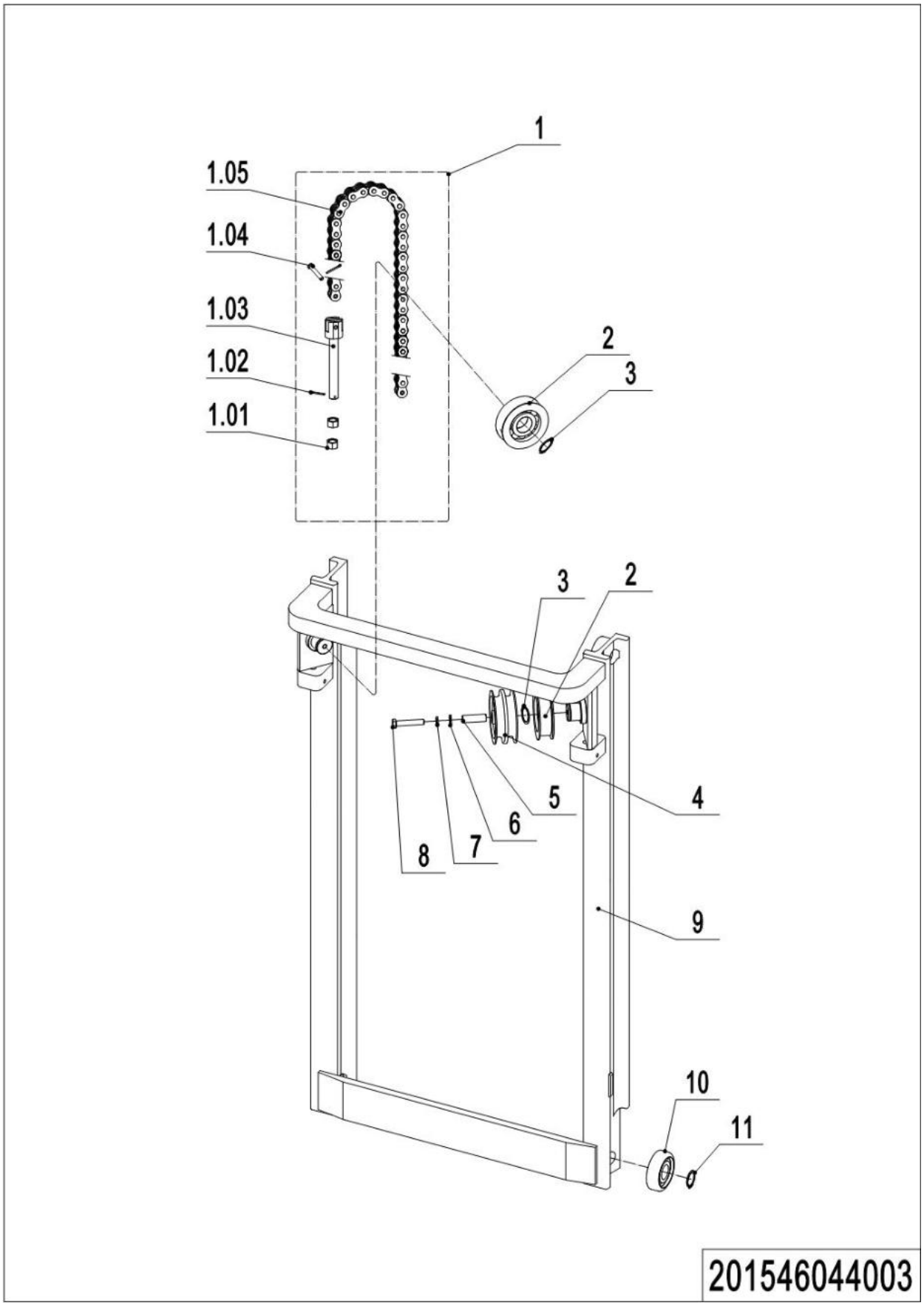


**1= Supply as package. 2= Supply with constraints. 3= Phasing-out supply. 4= Supply as assembly. 5= Check other tables.**

## 04 Inner Mast (Double Mast) (201546044003)

| No. | Item Code | Mark | Item Description | Qty. | Substitute | Note |
|---|---|---|---|---|---|---|
| 1 | 201044510012 | | Chain | 2 | | 3000 |
| 1 | 201044510013 | | Chain | 2 | | 2400 |
| 1.01 | 910300200008 | 1 | Nut | 2 | | |
| 1.02 | 910600600030 | 1 | Cotter Pin | 2 | | |
| 1.03 | 532644020096 | | Chain Anchor | 1 | | |
| 1.04 | 910600700029 | 1 | Pin | 2 | | |
| 1.05 | 201544510017 | | Chain | 1 | | |
| 1.05 | 201044510017 | | Chain | 1 | | |
| 1.05 | 201044510019 | | Chain | 1 | | |
| 2 | 940200500001 | | Sprocket Bearing | 2 | | |
| 3 | 910401300020 | | Circlip | 2 | | |
| 4 | 201044520040 | | Pulley | 3 | | |
| 5 | 201044520039 | | Sleeve | 1 | | |
| 6 | 910400100008 | 1 | Flat Washer | 2 | | |
| 7 | 910400500008 | 1 | Spring Washer | 2 | | |
| 8 | 910100300057 | 1 | Bolt | 1 | | |
| 9 | 201544010000 | | Inner Mast(3000) | 1 | | 3000 |
| 9 | 201544010001 | | Inner Mast(2400) | 1 | | 2400 |
| 10 | 940200300007 | | Compound Roller | 2 | | |
| 11 | 910401300018 | | Circlip | 2 | | |

**1= Supply as package. 2= Supply with constraints. 3= Phasing-out supply. 4= Supply as assembly. 5= Check other tables.**

## 05 Single Mast (201546043003)

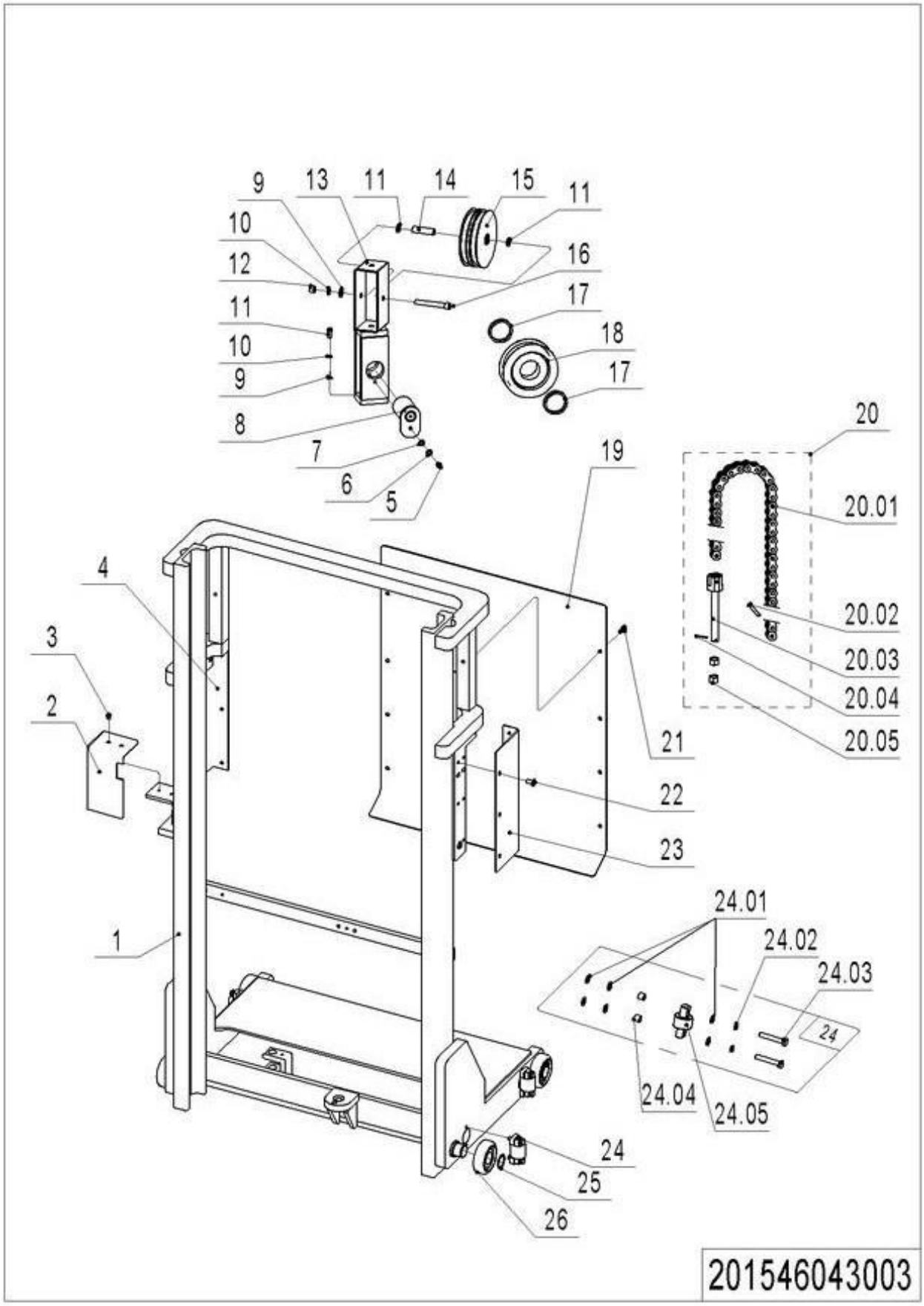


**1= Supply as package. 2= Supply with constraints. 3= Phasing-out supply. 4= Supply as assembly. 5= Check other tables.**

## 05 Single Mast (201546043003)

| No. | Item Code | Mark | Item Description | Qty. | Substitute | Note |
|---|---|---|---|---|---|---|
| 1 | 201543010000 | | Mast(1200) | 1 | | 1200 |
| 1 | 201543010001 | | Mast(1600) | 1 | | 1600 |
| 1 | 201543010002 | | Mast(1800) | 1 | | 1800 |
| 2 | 201044520024 | | Protective Cover | 1 | | |
| 3 | 910200300023 | 1 | Screw | 2 | | |
| 4 | 201543020010 | | Mounting Rack | 1 | | 1200 |
| 4 | 201543020011 | | Mounting Rack | 1 | | 1600 |
| 4 | 201543020012 | | Mounting Rack | 1 | | 1800 |
| 5 | 910200200058 | 1 | Screw | 8 | | |
| 6 | 910400500006 | 1 | Spring Washer | 8 | | |
| 7 | 910400100006 | 1 | Flat Washer | 1 | | |
| 8 | 201044510000 | | Pin | 1 | | |
| 9 | 910400100006 | 1 | Flat Washer | 2 | | |
| 10 | 910400500006 | 1 | Spring Washer | 23 | | |
| 11 | 910100300050 | 1 | Bolt | 1 | | |
| 12 | 910300100008 | 1 | Nut | 1 | | |
| 13 | 201044510001 | | Yoke | 1 | | |
| 14 | 201044520053 | | Sleeve | 1 | | |
| 15 | 213044520165 | | Pulley | 2 | | |
| 16 | 910100100056 | 1 | Bolt | 1 | | |
| 17 | 201044520056 | | Spacer Bush | 2 | | |
| 18 | 940200500007 | | Sprocket Bearing | 1 | | |
| 19 | 201544520018 | | Guard Plate | 1 | | 1200 |
| 19 | 201544520002 | | Guard Plate | 1 | | 1600 |
| 19 | 201543020016 | | Guard Plate | 1 | | 1800 |
| 20 | 201044510015 | | Chain | 1 | | 1200 |
| 20 | 201043010000 | | Chain | 1 | | 1600 |
| 20 | 201043010003 | | Chain | 1 | | 1800 |
| 20.01 | 201044510018 | | Chain | 1 | | 1200 |
| 20.01 | 201043010000 | | Chain | 1 | | 1600 |

**1= Supply as package. 2= Supply with constraints. 3= Phasing-out supply. 4= Supply as assembly. 5= Check other tables.**

## 05 Single Mast (201546043003) Continuation

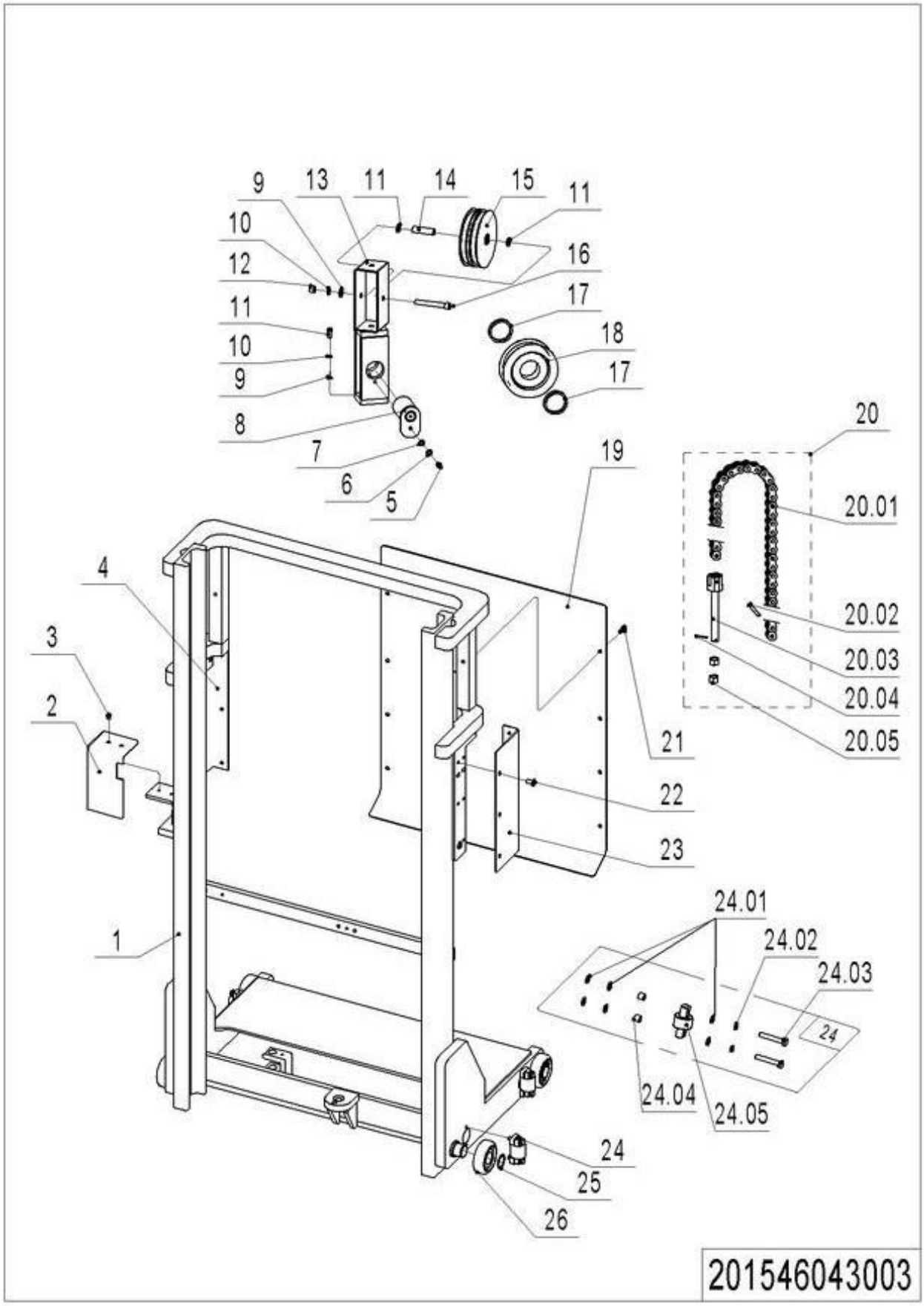


**1= Supply as package. 2= Supply with constraints. 3= Phasing-out supply. 4= Supply as assembly. 5= Check other tables.**

## 05 Single Mast (201546043003) Continuation

| No. | Item Code | Mark | Item Description | Qty. | Substitute | Note |
|---|---|---|---|---|---|---|
| 20.01 | 201043010003 | | Chain | 1 | | 1800 |
| 20.02 | 910600700029 | 1 | Pin | 2 | | |
| 20.03 | 532644020096 | | Chain Anchor | 1 | | |
| 20.04 | 910600600030 | 1 | Cotter Pin | 2 | | |
| 20.05 | 910300200008 | 1 | Nut | 2 | | |
| 21 | 940800700001 | 1 | Rivet | 10 | | |
| 22 | 910200300028 | 1 | Screw | 6 | | |
| 23 | 201543020007 | | Mounting Rack | 1 | | 1200 |
| 23 | 201543020008 | | Mounting Rack | 1 | | 1600 |
| 23 | 201543020009 | | Mounting Rack | 1 | | 1800 |
| 24 | 213098510003 | | Roller | 4 | | |
| 24.01 | 910400100007 | 1 | Flat Washer | 6 | | |
| 24.02 | 910400500007 | 1 | Spring Washer | 2 | | |
| 24.03 | 910200200079 | 1 | Screw | 8 | | |
| 24.04 | 940600500017 | 1 | Washer | 2 | | |
| 24.05 | 940200200007 | | Side Roller | 1 | | |
| 25 | 910401300018 | 1 | Circlip | 4 | | |
| 26 | 940200100006 | | Main Roller | 4 | | |

**1= Supply as package. 2= Supply with constraints. 3= Phasing-out supply. 4= Supply as assembly. 5= Check other tables.**

## 06 Fork Carriage (Single Mast) (201546038001)

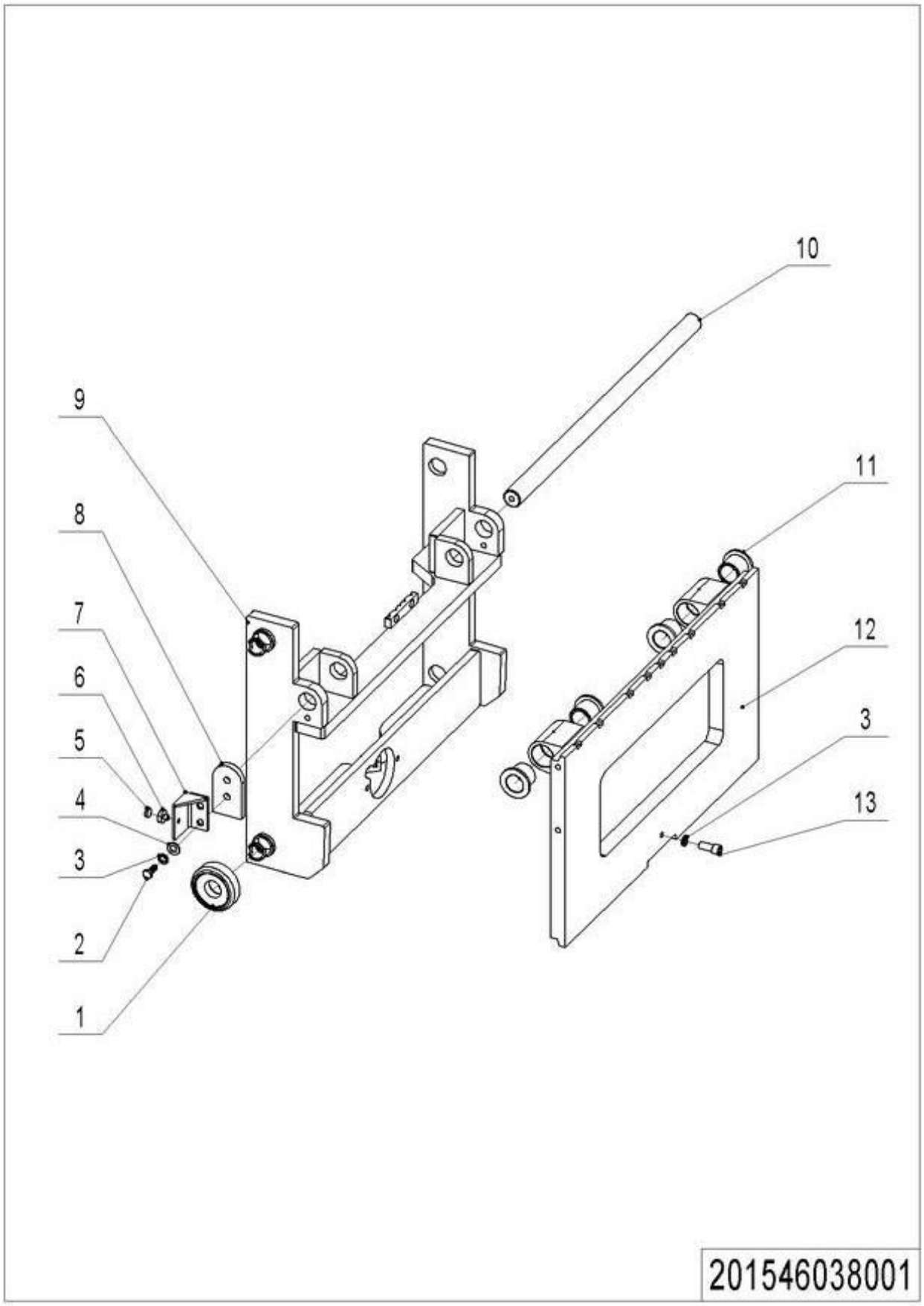


**1= Supply as package. 2= Supply with constraints. 3= Phasing-out supply. 4= Supply as assembly. 5= Check other tables.**

## 06 Fork Carriage (Single Mast) (201546038001)

| No. | Item Code | Mark | Item Description | Qty. | Substitute | Note |
|---|---|---|---|---|---|---|
| 1 | 940200300004 | | Compound Roller | 4 | | |
| 2 | 910100300050 | 1 | Bolt | 4 | | |
| 3 | 910400500008 | 1 | Spring Washer | 5 | | |
| 4 | 910400100008 | 1 | Flat Washer | 4 | | |
| 5 | 940600100001 | | Magnetic Steel | 1 | | |
| 6 | 940600200001 | | Mounting Base | 1 | | |
| 7 | 201538020021 | | Fixing Plate | 1 | | |
| 8 | 201038020010 | | Baffle | 2 | | |
| 9 | 201538010004 | | Carriage | 1 | | |
| 10 | 201538020020 | | Axle | 1 | | |
| 11 | 940500400002 | | Bearing | 4 | | |
| 12 | 201538010005 | | Fork | 1 | | |
| 13 | 910200200098 | 1 | Screw | 1 | | |

**1= Supply as package. 2= Supply with constraints. 3= Phasing-out supply. 4= Supply as assembly. 5= Check other tables.**

# 07 Fork Carriage (Double Mast) (201546038002)

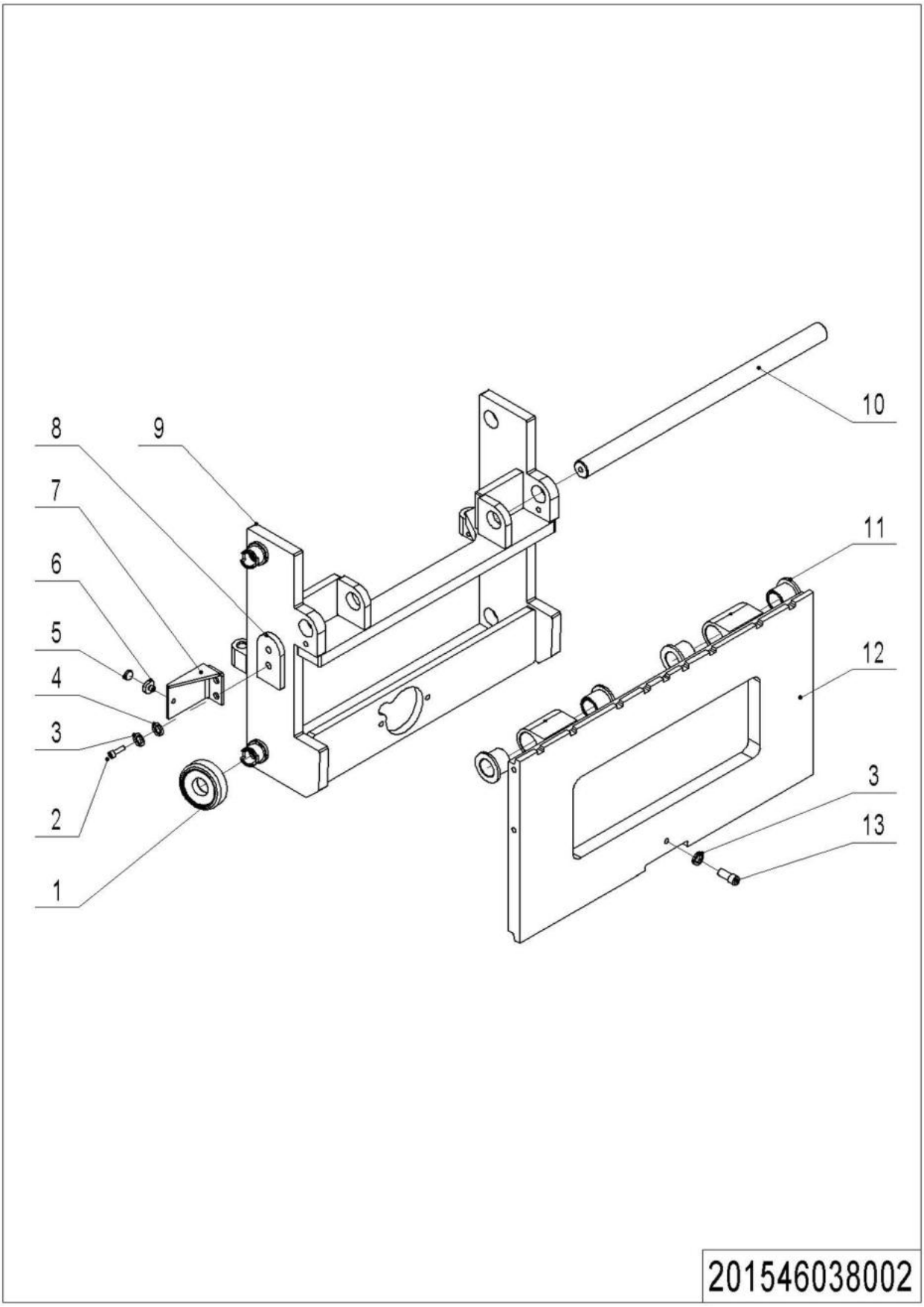


**1= Supply as package. 2= Supply with constraints. 3= Phasing-out supply. 4= Supply as assembly. 5= Check other tables.**

## 07 Fork Carriage (Double Mast) (201546038002)

| No. | Item Code | Mark | Item Description | Qty. | Substitute | Note |
|---|---|---|---|---|---|---|
| 1 | 940200300004 | | Compound Roller | 4 | | |
| 2 | 910100300050 | 1 | Bolt | 4 | | |
| 3 | 910400500008 | 1 | Spring Washer | 5 | | |
| 4 | 910400100008 | 1 | Flat Washer | 4 | | |
| 5 | 940600100001 | | Magnetic Steel | 1 | | |
| 6 | 940600200001 | | Mounting Base | 1 | | |
| 7 | 201538020010 | | Fixing Plate | 1 | | |
| 8 | 201038020010 | | Baffle | 2 | | |
| 9 | 201538010002 | | Carriage | 1 | | |
| 10 | 201038020030 | | Axle | 1 | | |
| 11 | 940500400002 | | Bearing | 4 | | |
| 12 | 201538010003 | | Fork | 1 | | |
| 13 | 910200200098 | 1 | Screw | 1 | | |

**1= Supply as package. 2= Supply with constraints. 3= Phasing-out supply. 4= Supply as assembly. 5= Check other tables.**

## 08 Fork Carriage (Triple Mast) (201546038003)

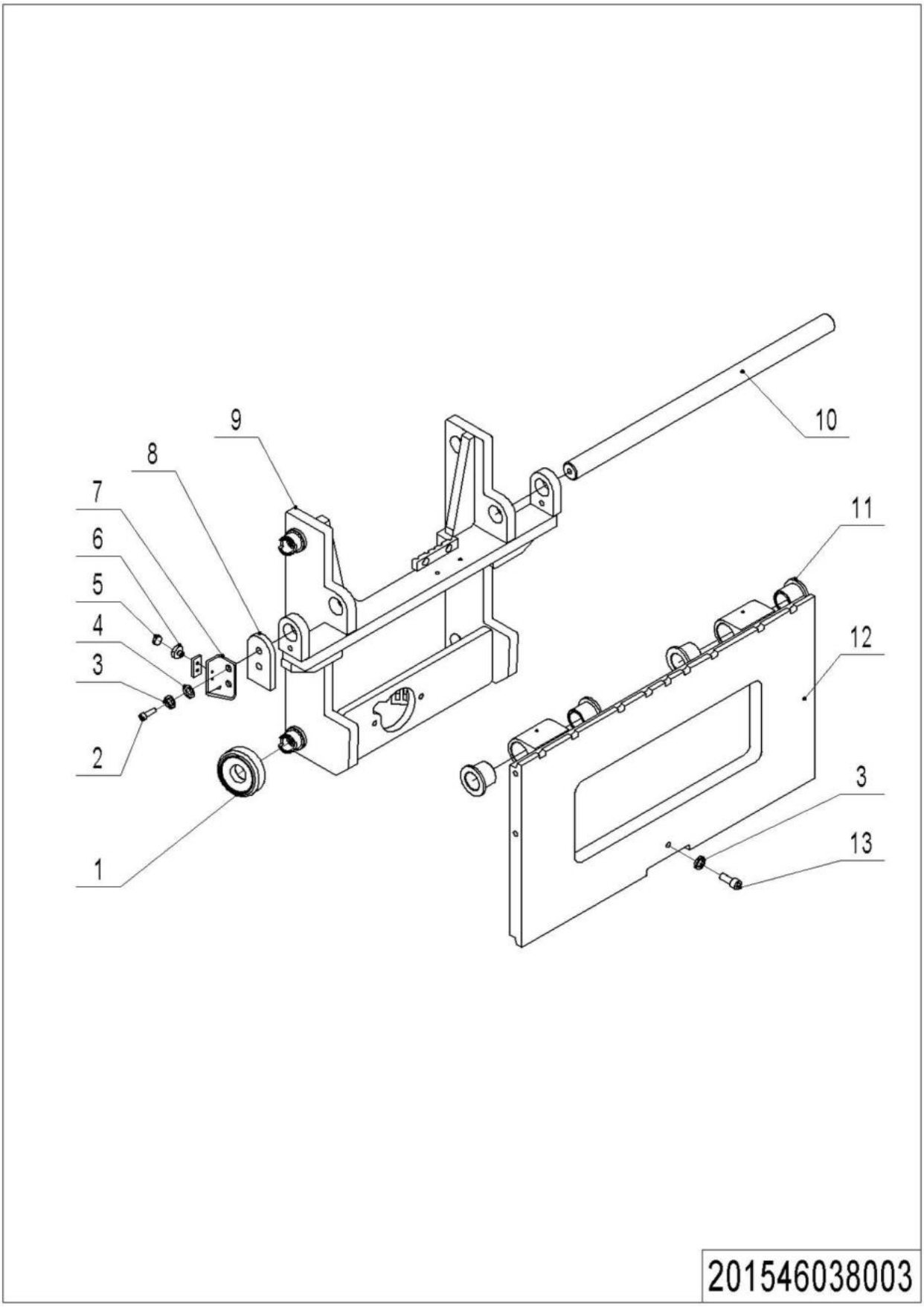


**1= Supply as package. 2= Supply with constraints. 3= Phasing-out supply. 4= Supply as assembly. 5= Check other tables.**

## 08 Fork Carriage (Triple Mast) (201546038003)

| No. | Item Code | Mark | Item Description | Qty. | Substitute | Note |
|---|---|---|---|---|---|---|
| 1 | 940200300004 | | Compound Roller | 4 | | |
| 2 | 910100300050 | 1 | Bolt | 4 | | |
| 3 | 910400500008 | 1 | Spring Washer | 5 | | |
| 4 | 910400100008 | 1 | Flat Washer | 4 | | |
| 5 | 940600100001 | | Magnetic Steel | 1 | | |
| 6 | 940600200001 | | Mounting Base | 1 | | |
| 7 | 201538020021 | | Fixing Plate | 1 | | |
| 8 | 201038020010 | | Baffle | 2 | | |
| 9 | 201538010000 | | Carriage | 1 | | |
| 10 | 201538020000 | | Axle | 1 | | |
| 11 | 940500400002 | | Bearing | 4 | | |
| 12 | 201538010001 | | Fork | 1 | | |
| 13 | 910200200098 | 1 | Screw | 1 | | |

**1= Supply as package. 2= Supply with constraints. 3= Phasing-out supply. 4= Supply as assembly. 5= Check other tables.**

# Chapter5：Steering System, Braking System, Wheels

## 01 Tiller Unit (505646011001)

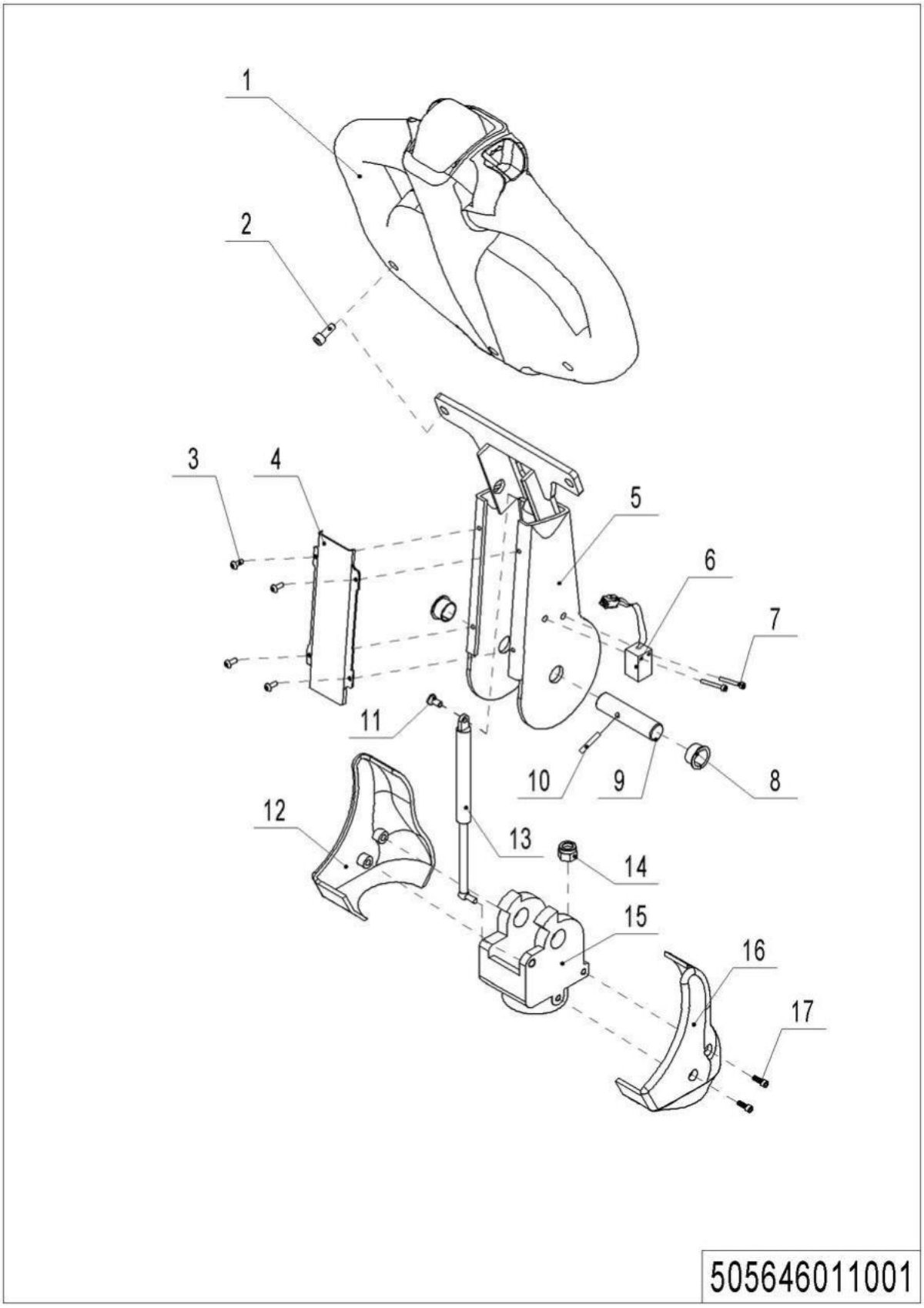


1= Supply as package. 2= Supply with constraints. 3= Phasing-out supply. 4= Supply as assembly. 5= Check other tables.

## 01 Tiller Unit (505646011001)

| No. | Item Code | Mark | Item Description | Qty. | Substitute | Note |
|---|---|---|---|---|---|---|
| 1 | 922100100012 | | Tiller | 1 | | |
| 1 | 922100100001 | | Tiller | 1 | | |
| 2 | 910200200058 | 1 | Screw | 2 | | |
| 3 | 910200300005 | 1 | Screw | 4 | | |
| 4 | 505611020013 | | Close Plate | 1 | | |
| 5 | 505611010001 | | Tiller | 1 | | |
| 5 | 505611010000 | | Tiller | 1 | | |
| 6 | 505633510000 | 2 | Proximity Switch | 1 | | |
| 7 | 910200500015 | | Screw | 2 | | |
| 8 | 940500200002 | 1 | Bushing | 2 | | |
| 9 | 505611020008 | | Axle | 1 | | |
| 10 | 910600400013 | 1 | Spring Pin | 1 | | |
| 11 | 910200200057 | 1 | Screw | 1 | | |
| 12 | 505611020010 | | Protective Cover | 1 | | |
| 13 | 940400100003 | | Air Spring | 1 | | |
| 14 | 910300500005 | 1 | Nut | 2 | | |
| 15 | 505611020009 | | Bracket | 1 | | |
| 16 | 505611020011 | | Protective Cover | 1 | | |
| 17 | 910200300016 | 1 | Screw | 4 | | |

**1= Supply as package. 2= Supply with constraints. 3= Phasing-out supply. 4= Supply as assembly. 5= Check other tables.**

## 02 Control Handle (505646010002)

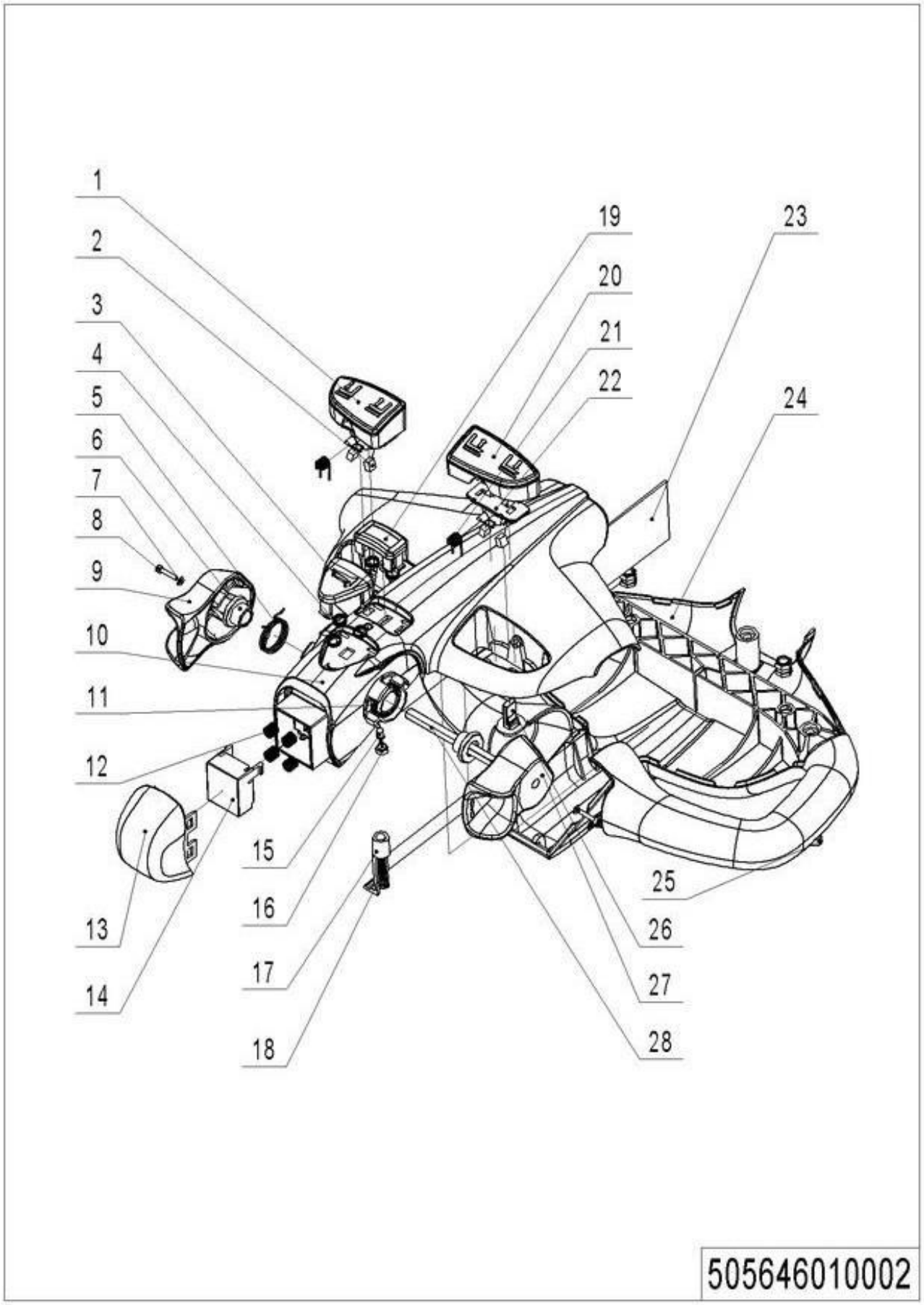


**1= Supply as package. 2= Supply with constraints. 3= Phasing-out supply. 4= Supply as assembly. 5= Check other tables.**

## 02 Control Handle (505646010002)

| No. | Item Code | Mark | Item Description | Qty. | Substitute | Note |
|---|---|---|---|---|---|---|
| 1 | 505698520016 | | Button cap | 1 | | |
| 2 | 505698520005 | | Magnet | 4 | | |
| 3 | 505698520002 | | Horn Button | 1 | | |
| 4 | 505698520003 | | Spring | 5 | | |
| 5 | 505698520027 | | Torsional Spring | 1 | | |
| 6 | 505698520004 | | Sleeve | 2 | | |
| 7 | 505698520009 | 1 | Washer | 2 | | |
| 8 | 505698520008 | 1 | Screw | 2 | | |
| 9 | 505698520001 | | Traction lever | 1 | | |
| 10 | 505698520014 | | Handle Cap | 1 | | |
| 11 | 505698520026 | | Torsional Spring | 1 | | |
| 12 | 505698520006 | | Spring | 4 | | |
| 13 | 505698520020 | | Button Cap- | 1 | | |
| 14 | 505698520019 | | Pedestal | 1 | | |
| 15 | 505698520024 | | Light | 1 | | |
| 16 | 505698520025 | | Lamp Holder | 1 | | |
| 17 | 505698520012 | | Clamp | 1 | | |
| 18 | 505698520023 | 1 | Screw | 1 | | |
| 19 | 505698520021 | | Button Cap | 1 | | |
| 20 | 505698520022 | | Button Cap | 1 | | |
| 21 | 505698520018 | | Torsional Spring | 2 | | |
| 22 | 505698520017 | | Fixing Base | 2 | | |
| 23 | 505698520028 | | circuit Board | 1 | | |
| 24 | 505698520015 | | Handle Cap | 1 | | |
| 25 | 505698520007 | 1 | Screw | 3 | | |
| 26 | 505698520013 | | Sensor | 2 | | |
| 27 | 505698520010 | | Traction lever | 1 | | |
| 28 | 505698520011 | | Axle-Traction lever | 1 | | |

**1= Supply as package. 2= Supply with constraints. 3= Phasing-out supply. 4= Supply as assembly. 5= Check other tables.**

## 03 EPS --- Electric Power Steering (201546031501)

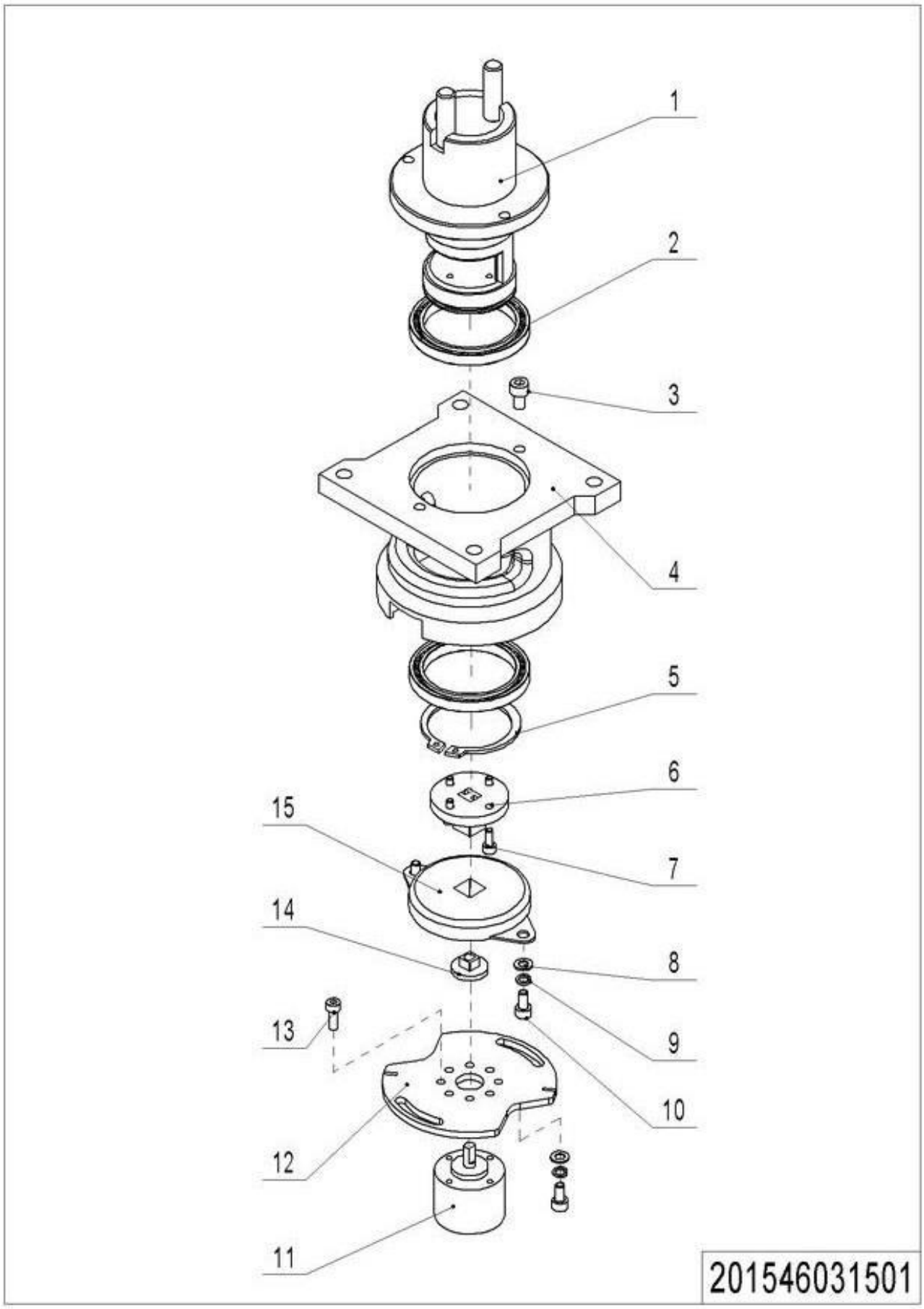


**1= Supply as package. 2= Supply with constraints. 3= Phasing-out supply. 4= Supply as assembly. 5= Check other tables.**

## 03 EPS --- Electric Power Steering (201546031501)

| No. | Item Code | Mark | Item Description | Qty. | Substitute | Note |
|---|---|---|---|---|---|---|
| 1 | 505631510001 | | Bracket | 1 | | |
| 2 | 910700200041 | 1 | Bearing | 2 | | |
| 3 | 910200200032 | 1 | Screw | 3 | | |
| 4 | 505631520002 | | Fixing Base | 1 | | |
| 5 | 910401300024 | 1 | Circlip | 1 | | |
| 6 | 505631520005 | | Link Block | 1 | | |
| 7 | 910200500022 | 1 | Screw | 4 | | |
| 8 | 910400100004 | 1 | Flat Washer | 4 | | |
| 9 | 910400500004 | 1 | Spring Washer | 4 | | |
| 10 | 910200200022 | 1 | Screw | 4 | | |
| 11 | 505633010028 | | Potentiometer | 1 | | |
| 12 | 505731520001 | | Fixing Plate | 1 | | |
| 13 | 910200200014 | 1 | Screw | 4 | | |
| 14 | 505631520003 | | Link Block | 1 | | |
| 15 | 940801200001 | | Rotary Damper | 1 | | |

**1= Supply as package. 2= Supply with constraints. 3= Phasing-out supply. 4= Supply as assembly. 5= Check other tables.**

## 04 Caster (532646016501)

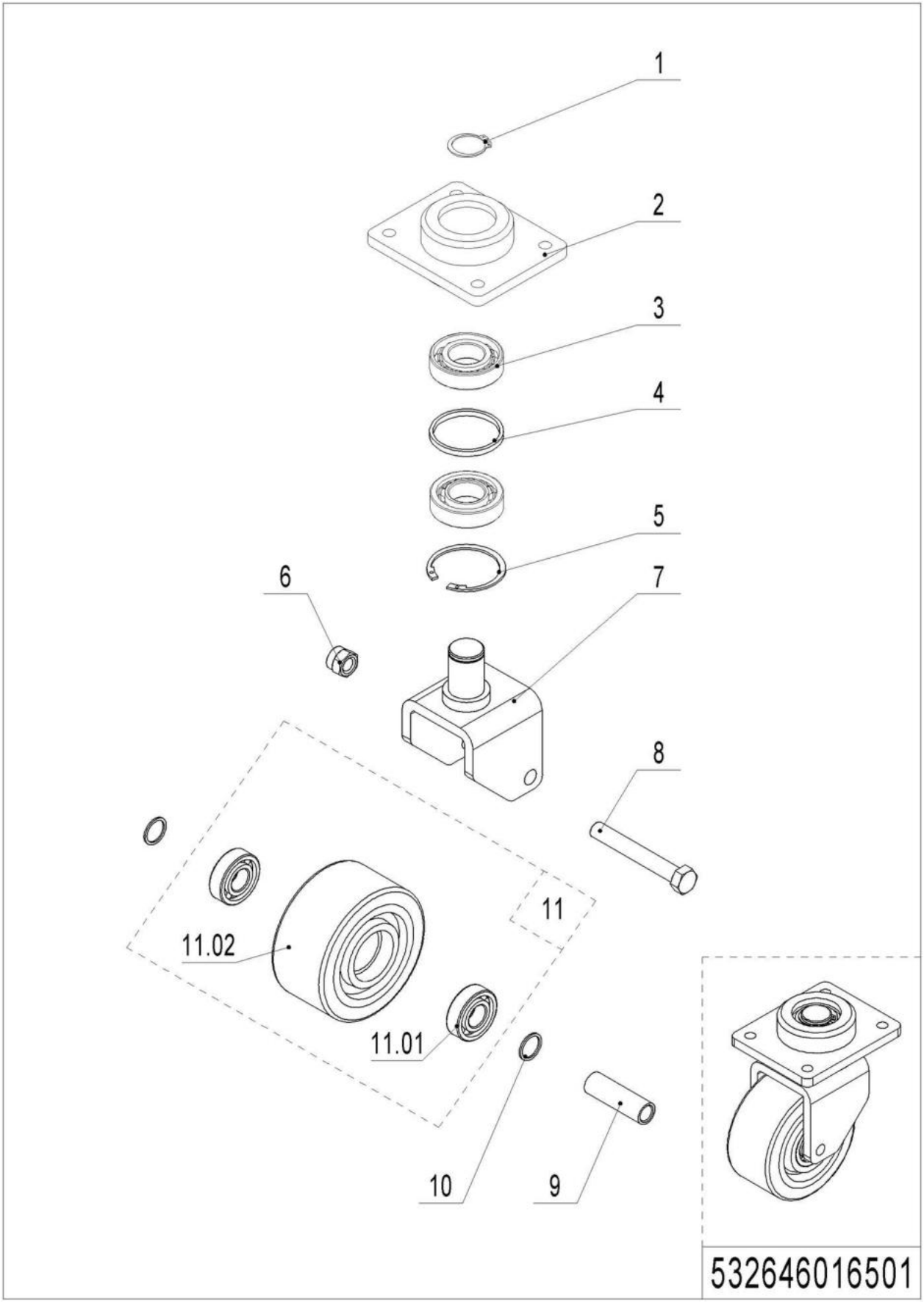


**1= Supply as package. 2= Supply with constraints. 3= Phasing-out supply. 4= Supply as assembly. 5= Check other tables.**

## 04 Caster (532646016501)

| No. | Item Code | Mark | Item Description | Qty. | Substitute | Note |
|---|---|---|---|---|---|---|
| -- | 532616510000 | | Caster Assembly | 2 | | |
| 1 | 910401300016 | 1 | Circlip | 1 | | |
| 2 | 532616520002 | | Bracket | 1 | | |
| 3 | 910700400004 | | Bearing | 2 | | |
| 4 | 532616520001 | | Check Ring | 1 | | |
| 5 | 910401400018 | 1 | Circlip | 1 | | |
| 6 | 910300500007 | 1 | Nut | 1 | | |
| 7 | 532616510001 | | Wheel Carrier | 1 | | |
| 8 | 910100100069 | 1 | Bolt | 1 | | |
| 9 | 532616520003 | | Bushing | 1 | | |
| 10 | 940600500014 | | Washer | 2 | | |
| 11 | 532698510004 | | Wheel | 1 | | |
| 11.01 | 910700200019 | | Bearing | 2 | | |
| 11.02 | 940300300019 | | WheelΦ124x60 | 1 | | |

**1= Supply as package. 2= Supply with constraints. 3= Phasing-out supply. 4= Supply as assembly. 5= Check other tables.**

## 05 Load Wheel (201546017001)

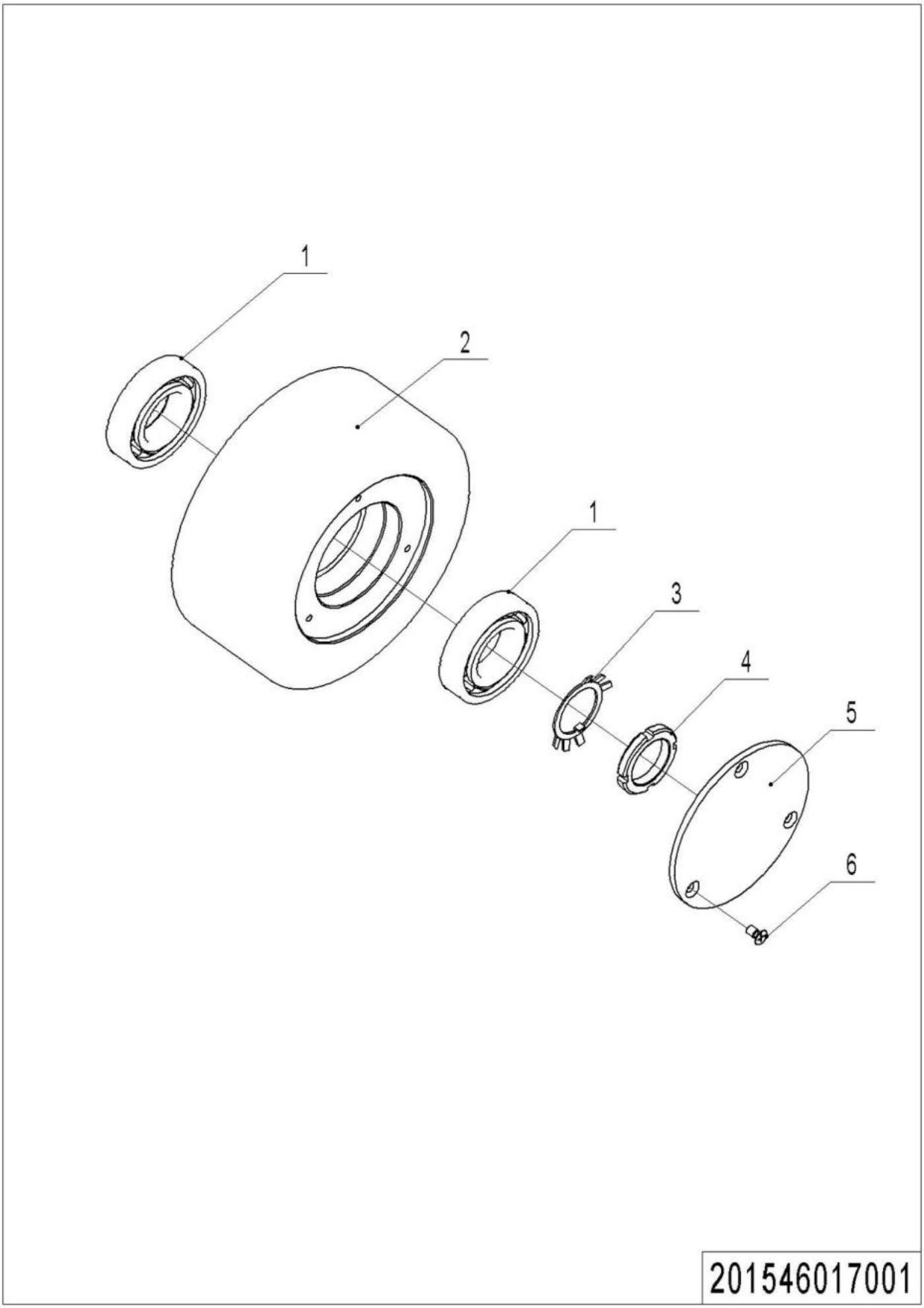


**1= Supply as package. 2= Supply with constraints. 3= Phasing-out supply. 4= Supply as assembly. 5= Check other tables.**

## 05 Load Wheel (202046017001)

| No. | Item Code | Mark | Item Description | Qty. | Substitute | Note |
|---|---|---|---|---|---|---|
| 1 | 910700200023 | | Bearing | 2 | | |
| 2 | 940300300024 | | WheelΦ210x85 | 1 | | |
| 3 | 910400900007 | | Lock Washer | 1 | | |
| 4 | 910300700002 | | Nut | 1 | | |
| 5 | 201017020000 | | End Cap | 1 | | |
| 6 | 910200400016 | 1 | Screw | 3 | | |

**1= Supply as package. 2= Supply with constraints. 3= Phasing-out supply. 4= Supply as assembly. 5= Check other tables.**

# Chapter6: Electrical Parts

## 01 Wire Harness (KORDEL) (201546033001)

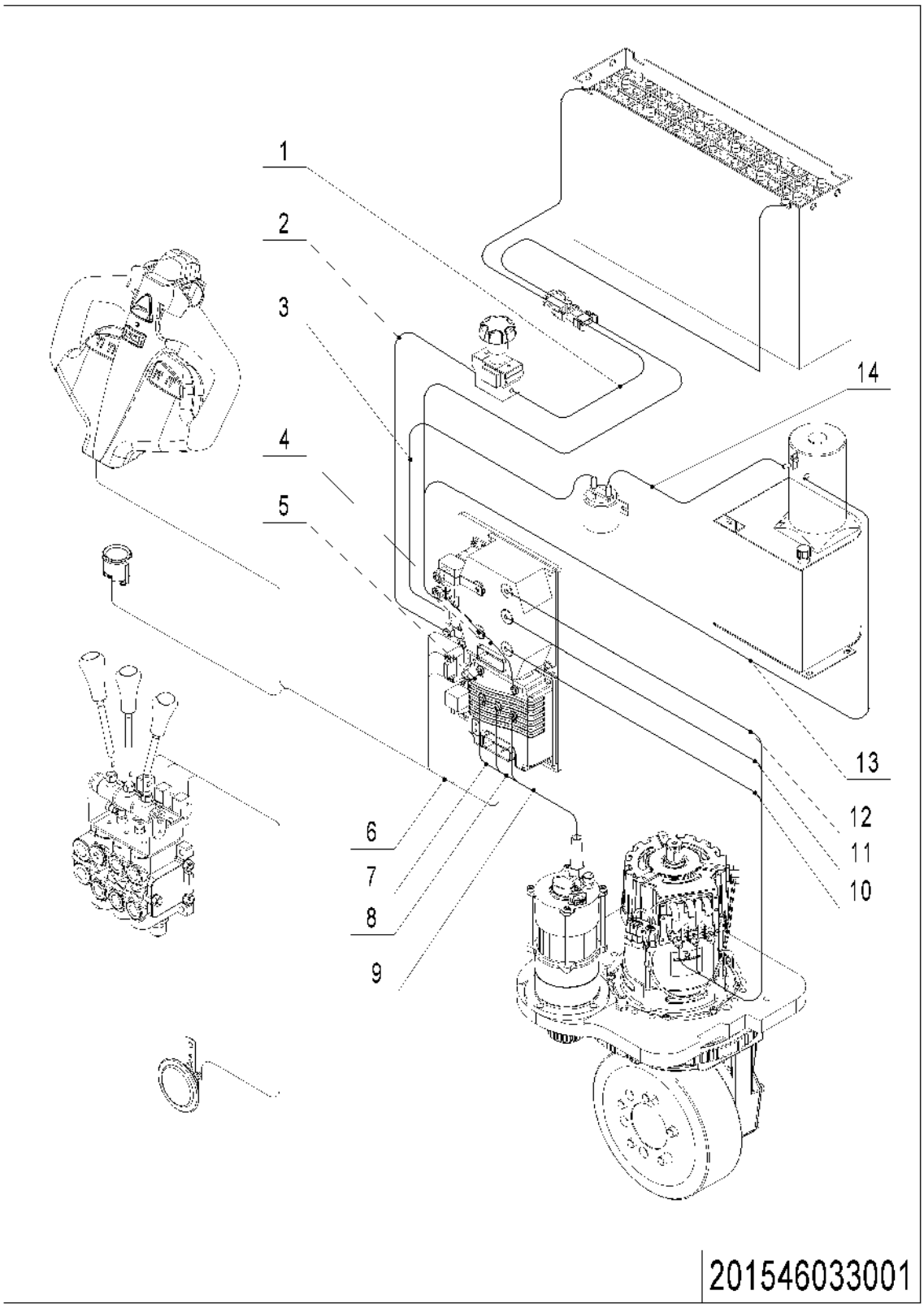


1= Supply as package. 2= Supply with constraints. 3= Phasing-out supply. 4= Supply as assembly. 5= Check other tables.

## 01 Wire Harness (KORDEL) (201546033001)

| No. | Item Code | Mark | Item Description | Qty. | Substitute | Note |
|---|---|---|---|---|---|---|
| 1 | 201033010011 | | Wire Harness | 1 | | Lead-acid |
| 1 | 201033010023 | | Wire Harness | 1 | | Lead-acid+Side |
| 1 | 201033010032 | | Wire Harness | 1 | | Li |
| 1 | 201033010034 | | Wire Harness | 1 | | Side Extraction |
| 2 | 201033010004 | | Cable | 1 | | |
| 3 | 201033010014 | | Cable | 1 | | |
| 4 | 201033010019 | | Cables | 1 | | |
| 5 | 201033010017 | | Cables | 1 | | |
| 6 | 201033010016 | | Wire Harness | 1 | | Lead-acid |
| 6 | 201033010033 | | Wire Harness | 1 | | Li |
| 7 | 201033010020 | | Cables | 1 | | |
| 8 | 201033010021 | | Cables | 1 | | |
| 9 | 201033010022 | | Cables | 1 | | |
| 10 | 201033010018 | | Cable | 1 | | |
| 11 | 201033010025 | | Cable | 1 | | |
| 12 | 201033010026 | | Cable | 1 | | |
| 13 | 201033010005 | | Cable | 1 | | |
| 14 | 201033010015 | | Cable | 1 | | |

**1= Supply as package. 2= Supply with constraints. 3= Phasing-out supply. 4= Supply as assembly. 5= Check other tables.**

## 02 Wire Harness (ZD) (201546033002)

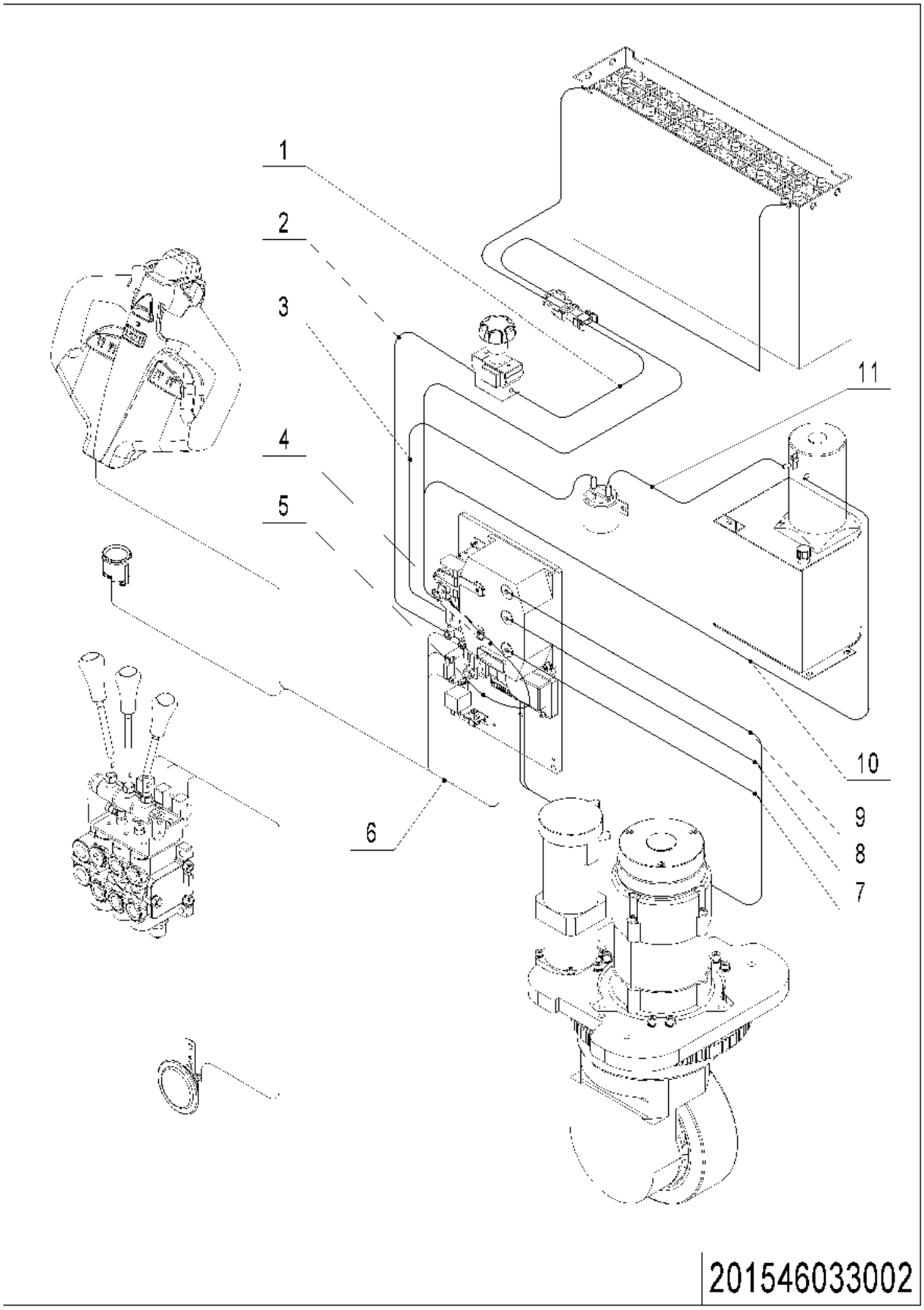


1= Supply as package. 2= Supply with constraints. 3= Phasing-out supply. 4= Supply as assembly. 5= Check other tables.

## 02 Wire Harness (ZD) (201546033002)

| No. | Item Code | Mark | Item Description | Qty. | Substitute | Note |
|---|---|---|---|---|---|---|
| 1 | 201033010011 | | Wire Harness | 1 | | Lead-acid |
| 1 | 201033010023 | | Wire Harness | 1 | | Lead-acid+Side |
| 1 | 201033010032 | | Wire Harness | 1 | | Li |
| 1 | 201033010034 | | Wire Harness | 1 | | Side Extraction |
| 2 | 201033010004 | | Cable | 1 | | |
| 3 | 201033010014 | | Cable | 1 | | |
| 4 | 201033010030 | | Cables | 1 | | |
| 5 | 201033010029 | | Cables | 1 | | |
| 6 | 201033010027 | | Wire Harness | 1 | | Lead-acid |
| 6 | 201033010031 | | Wire Harness | 1 | | Li |
| 7 | 201033010018 | | Cable | 1 | | |
| 8 | 201033010025 | | Cable | 1 | | |
| 9 | 201033010026 | | Cable | 1 | | |
| 10 | 201033010005 | | Cable | 1 | | |
| 11 | 201033010015 | | Cable | 1 | | |

**1= Supply as package. 2= Supply with constraints. 3= Phasing-out supply. 4= Supply as assembly. 5= Check other tables.**

## 03 Controller (KORDEL) (201546033003)

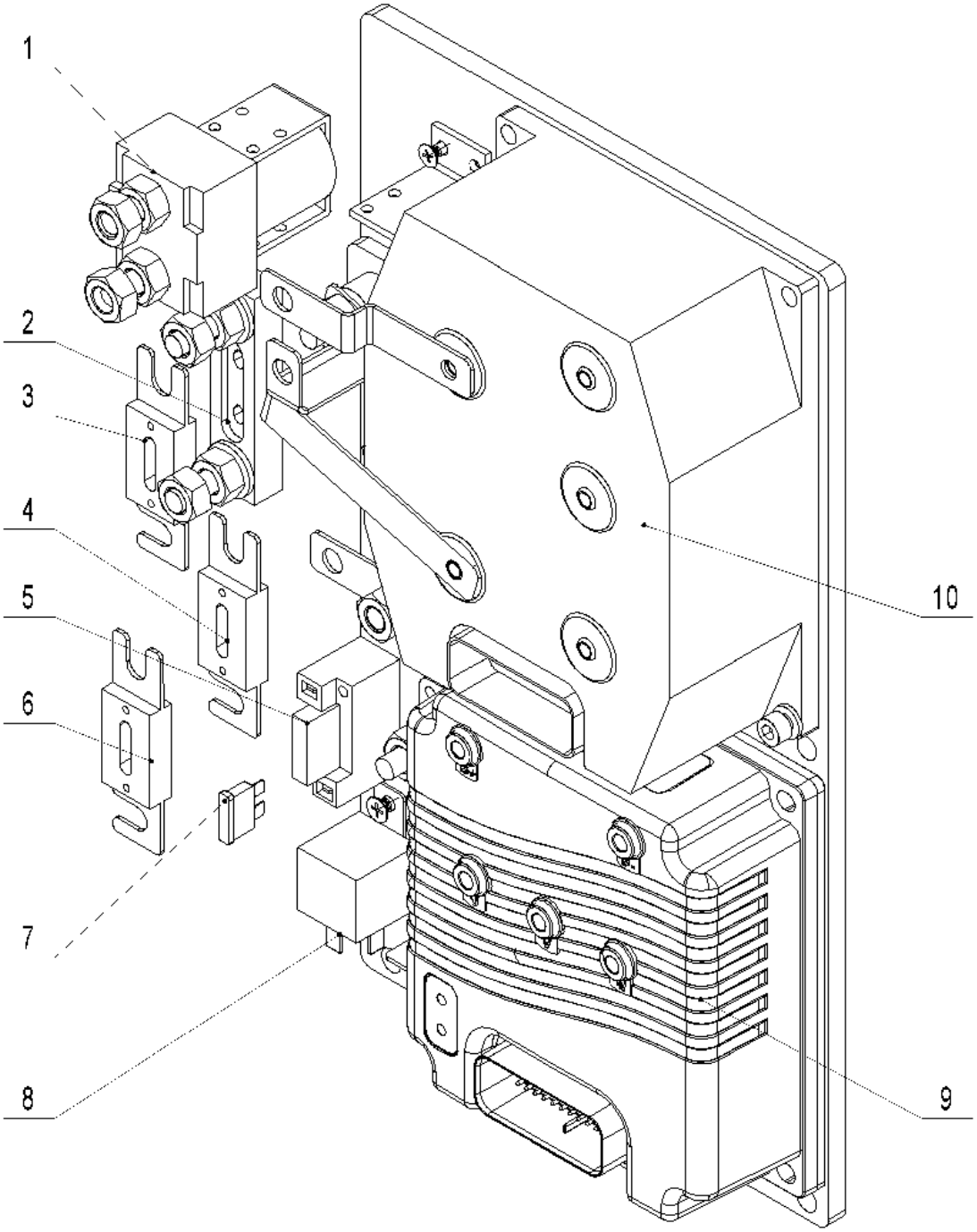


201546033003

**1= Supply as package. 2= Supply with constraints. 3= Phasing-out supply. 4= Supply as assembly. 5= Check other tables.**

## 03 Controller (KORDEL) (201546033003)

| No. | Item Code | Mark | Item Description | Qty. | Substitute | Note |
|---|---|---|---|---|---|---|
| 1 | 920700100004 | | Contactor | 1 | | |
| 2 | 920100400002 | | Fuse Holder | 1 | | |
| 3 | 920100100008 | | Fuse | 1 | | |
| 4 | 920100100007 | | Fuse | 1 | | |
| 5 | 920100400006 | | Fuse Holder | 1 | | |
| 6 | 920100100001 | | Fuse | 1 | | |
| 7 | 920100200002 | | Fuse | 1 | | |
| 8 | 920800100001 | | Relay | 1 | | |
| 9 | 921400100004 | | Controller | 1 | | |
| 10 | 921400100005 | | Controller | 1 | | |

**1= Supply as package. 2= Supply with constraints. 3= Phasing-out supply. 4= Supply as assembly. 5= Check other tables.**

## 04 Controller (ZD) (201546033004)

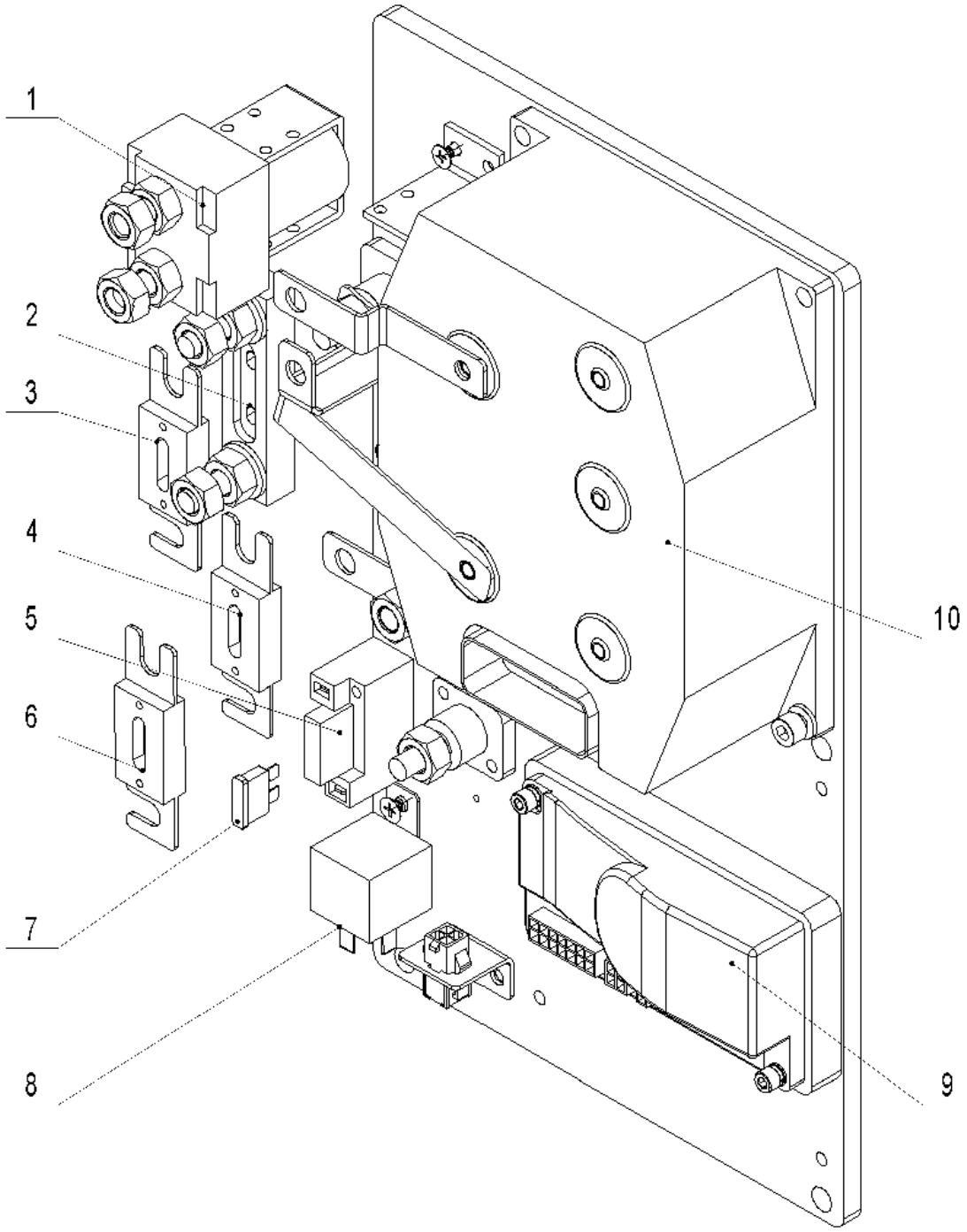


201546033004

**1= Supply as package. 2= Supply with constraints. 3= Phasing-out supply. 4= Supply as assembly. 5= Check other tables.**

## 04 Controller (ZD) (201546033004)

| No. | Item Code | Mark | Item Description | Qty. | Substitute | Note |
|---|---|---|---|---|---|---|
| 1 | 920700100004 | | Contactor | 1 | | |
| 2 | 920100400002 | | Fuse Holder | 1 | | |
| 3 | 920100100008 | | Fuse | 1 | | |
| 4 | 920100100007 | | Fuse | 1 | | |
| 5 | 920100400006 | | Fuse Holder | 1 | | |
| 6 | 920100100001 | | Fuse | 1 | | |
| 7 | 920100200002 | | Fuse | 1 | | |
| 8 | 920800100001 | | Relay | 1 | | |
| 9 | 921400100023 | | Controller | 1 | | |
| 10 | 921400100005 | | Controller | 1 | | |

**1= Supply as package. 2= Supply with constraints. 3= Phasing-out supply. 4= Supply as assembly. 5= Check other tables.**

## 05 Charger (201546036501)

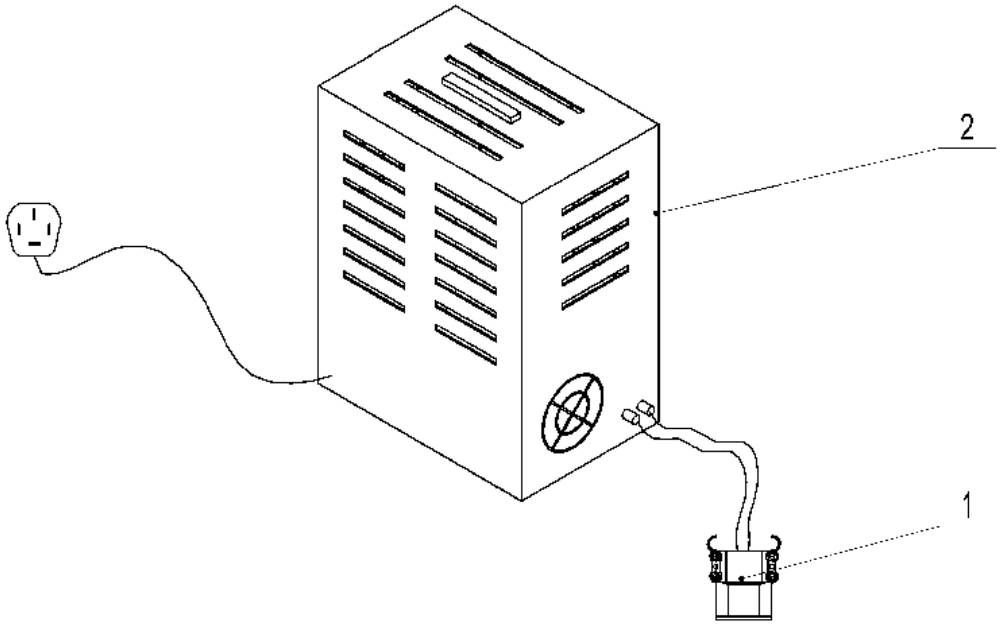


201546036501

1= Supply as package. 2= Supply with constraints. 3= Phasing-out supply. 4= Supply as assembly. 5= Check other tables.

## 05 Charger (201546036501)

| No. | Item Code | Mark | Item Description | Qty. | Substitute | Note |
|---|---|---|---|---|---|---|
| 1 | 921000200183 | | Charger24V35A(Aisa-CHN) | 1 | | Lead-acid |
| 1 | 921000200184 | | Charger24V35A(Aisa-ENG) | 1 | | Lead-acid |
| 1 | 921000200185 | | Charger24V35A(EU) | 1 | | Lead-acid |
| 1 | 921000200186 | | Charger24V35A(ENG) | 1 | | Lead-acid |
| 1 | 921000200187 | | Charger24V35A(AUS) | 1 | | Lead-acid |
| 1 | 921000200188 | | Charger24V35A(USA) | 1 | | Lead-acid |
| 1 | 921000200025 | | Charger24V55A(Aisa-CHN) | 1 | | Lead-acid |
| 1 | 921000200026 | | Charger24V55A(Aisa-ENG) | 1 | | Lead-acid |
| 1 | 921000200027 | | Charger24V55A(EU) | 1 | | Lead-acid |
| 1 | 921000200028 | | Charger24V55A(AUS) | 1 | | Lead-acid |
| 1 | 921000200029 | | Charger24V55A(ENG) | 1 | | Lead-acid |
| 1 | 921000200030 | | Charger24V55A(USA) | 1 | | Lead-acid |
| 1 | 921000200219 | | Charger 24V80A (Aisa-CHN) | 1 | | Lead-acid |
| 1 | 921000200220 | | Charger 24V80A (Aisa-ENG) | 1 | | Li |
| 1 | 921000200221 | | Charger 24V80A (EU) | 1 | | Li |
| 1 | 921000200222 | | Charger 24V80A (ENG) | 1 | | Li |
| 1 | 921000200223 | | Charger 24V80A (AUS) | 1 | | Li |
| 1 | 921000200224 | | Charger 24V80A (USA) | 1 | | Li |
| 2 | 920400100001 | | Connector | 1 | | Lead-acid |
| 2 | 920400100019 | | Connector | 1 | | Li |

**1= Supply as package. 2= Supply with constraints. 3= Phasing-out supply. 4= Supply as assembly. 5= Check other tables.**

## 06 Traction Battery (201546037001)

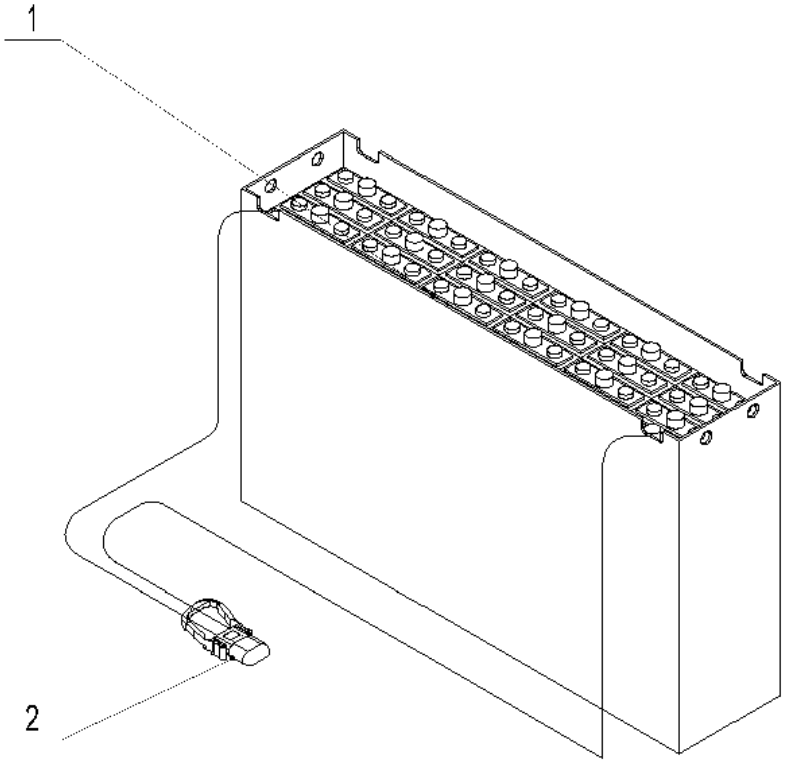


201546037001

1= Supply as package. 2= Supply with constraints. 3= Phasing-out supply. 4= Supply as assembly. 5= Check other tables.

## 06 Traction Battery (201546037001)

| No. | Item Code | Mark | Item Description | Qty. | Substitute | Note |
|---|---|---|---|---|---|---|
| 1 | 201037010000 | | Battery24V270Ah(welded) | 1 | | |
| 1 | 201037010001 | | Battery24V270Ah | 1 | | |
| 1 | 201037010002 | | Battery24V360Ah(welded) | 1 | | |
| 1 | 201037010003 | | Battery24V360Ah | 1 | | |
| 1 | 206037010001 | | Battery24V400Ah(welded) | 1 | | |
| 1 | 206037010002 | | Battery24V400Ah | 1 | | |
| 1 | 201037010004 | | Battery24V360Ah | 1 | | |
| 2 | 920400100007 | | Connector | 1 | | Lead-acid |

## 07 Traction Battery(Li) (201546037002)

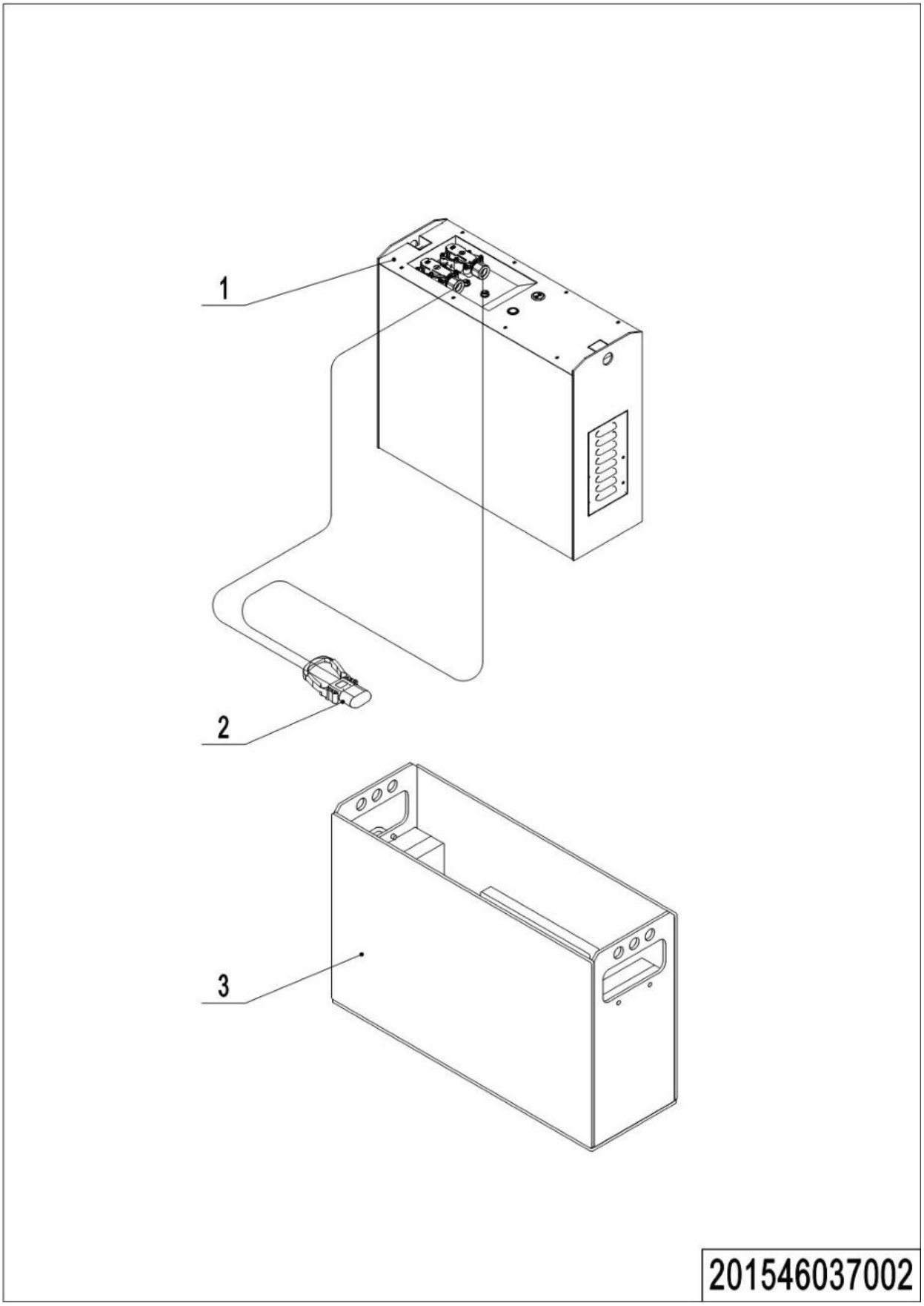


**1= Supply as package. 2= Supply with constraints. 3= Phasing-out supply. 4= Supply as assembly. 5= Check other tables.**

## 07 Traction Battery(Li) (201546037002)

| No. | Item Code | Mark | Item Description | Qty. | Substitute | Note |
|---|---|---|---|---|---|---|
| 1 | 920600100021 | | Li Battery24V200Ah | 1 | | |
| 1 | 920600100054 | | Li Battery24V200Ah | 1 | | |
| 1 | 920600100100 | | Li Battery24V300Ah | 1 | | Not For Triple Mast |
| 2 | 920400100017 | | Connector | 1 | | Li |
| 3 | 201037010005 | | Battery Box | 1 | | |

## 08 Display Assembly (505646010001)

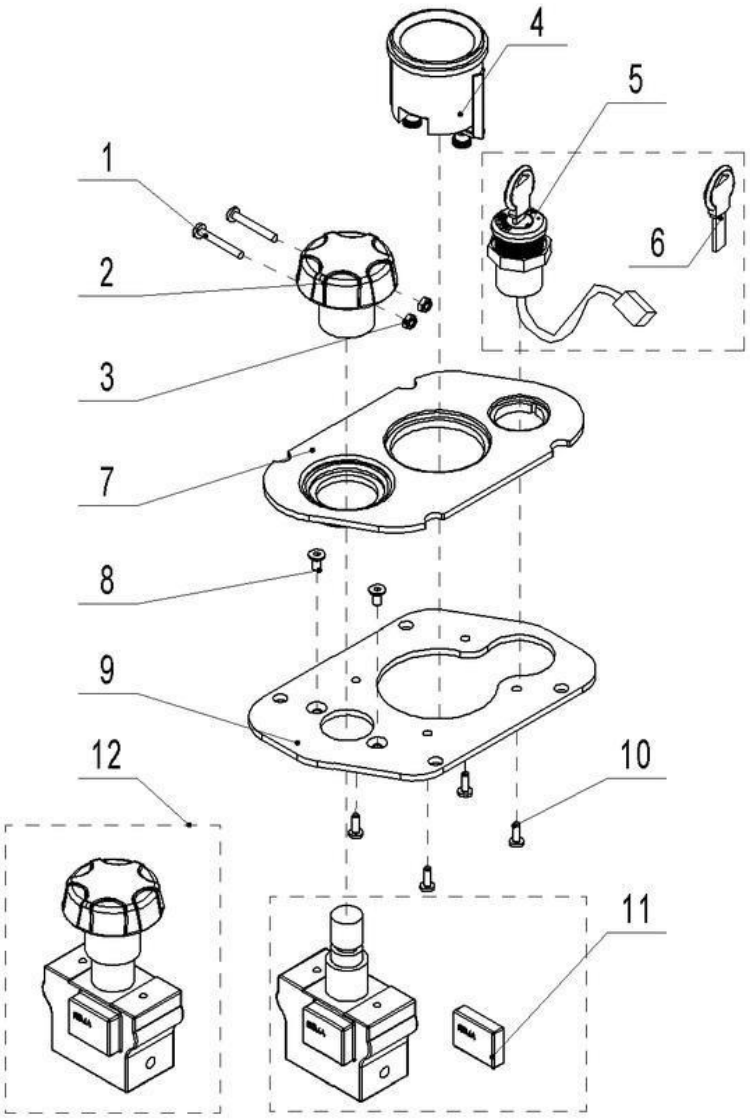


505646010001

1= Supply as package. 2= Supply with constraints. 3= Phasing-out supply. 4= Supply as assembly. 5= Check other tables.

## 08 Display Assembly (505646010001)

| No. | Item Code | Mark | Item Description | Qty. | Substitute | Note |
|---|---|---|---|---|---|---|
| 1 | 910200500016 | | Screw | 2 | | |
| 2 | 505698520029 | 2 | Button | 1 | | |
| 3 | 910300100002 | | Nut | 2 | | |
| 4 | 921100100001 | 2 | Battery Indicator | 1 | | |
| 4 | 921100100044 | 2 | Battery Indicator | 1 | | |
| 5 | 505634010000 | 2 | Key Switch | 1 | | |
| 6 | 505698520031 | 2 | Key | 1 | | |
| 7 | 505610020000 | | Panel | 1 | | |
| 8 | 910200400010 | | Screw | 2 | | |
| 9 | 505610020001 | | Fixing Plate | 1 | | |
| 10 | 910201300001 | | Screw | 4 | | |
| 11 | 920200100011 | 2 | Emergency Button | 1 | | |
| 12 | 920200100001 | 2 | Emergency Button | 1 | | |

**1= Supply as package. 2= Supply with constraints. 3= Phasing-out supply. 4= Supply as assembly. 5= Check other tables.**

## 09 Display Assembly(Li) (201046010001)

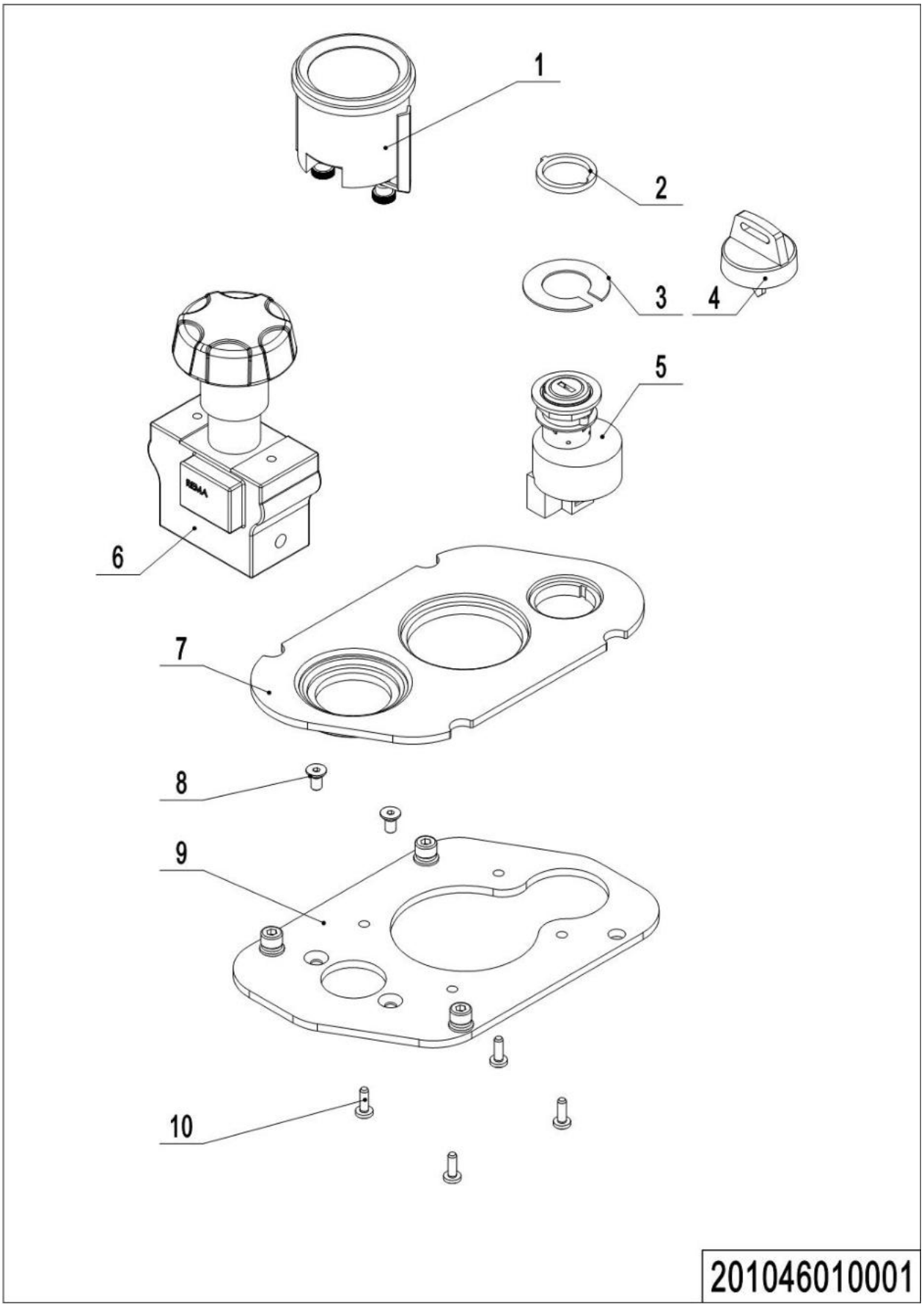


**1= Supply as package. 2= Supply with constraints. 3= Phasing-out supply. 4= Supply as assembly. 5= Check other tables.**

## 09 Display Assembly(Li) (201046010001)

| No. | Item Code | Mark | Item Description | Qty. | Substitute | Note |
|---|---|---|---|---|---|---|
| 1 | 921100100004 | | Coulombmeter | 1 | | Li |
| 2 | 505634020001 | | Washer | 1 | | Li |
| 3 | 505634020002 | | Washer | 1 | | Li |
| 4 | 505698520112 | | Key | 1 | | Li |
| 5 | 505634010001 | | Key Switch | 1 | | Li |
| 6 | 920200100001 | 2 | Emergency Button | 1 | | |
| 7 | 505610020000 | | Panel | 1 | | |
| 8 | 910200400010 | | Screw | 2 | | |
| 9 | 505610020001 | | Fixing Plate | 1 | | |
| 10 | 910201300001 | | Screw | 4 | | |

**1= Supply as package. 2= Supply with constraints. 3= Phasing-out supply. 4= Supply as assembly. 5= Check other tables.**

# Chapter7: Special Parts

## 01 Load Backrest (216546040501)

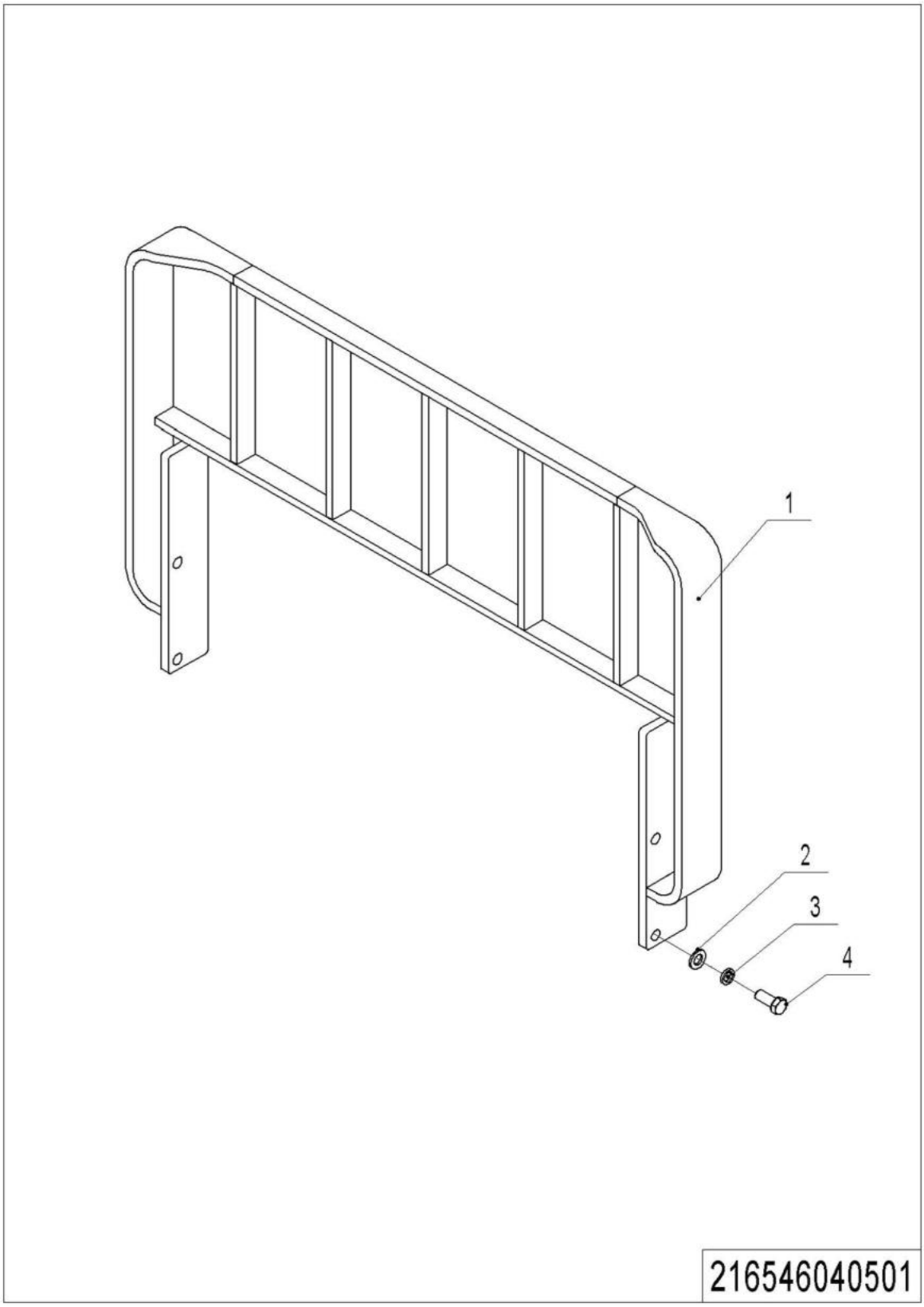


**1= Supply as package. 2= Supply with constraints. 3= Phasing-out supply. 4= Supply as assembly. 5= Check other tables.**

## 01 Load Backrest (216546040501)

| No. | Item Code | Mark | Item Description | Qty. | Substitute | Note |
|---|---|---|---|---|---|---|
| 1 | 216540510000 | | Load Backrest | 1 | | |
| 1 | 216540510001 | | Load Backrest | 1 | | |
| 2 | 910400100008 | 1 | Flat Washer | 4 | | |
| 3 | 910400500008 | 1 | Spring Washer | 4 | | |
| 4 | 910100300050 | 1 | Bolt | 4 | | |

## 02 Guard Arm (505646017501)

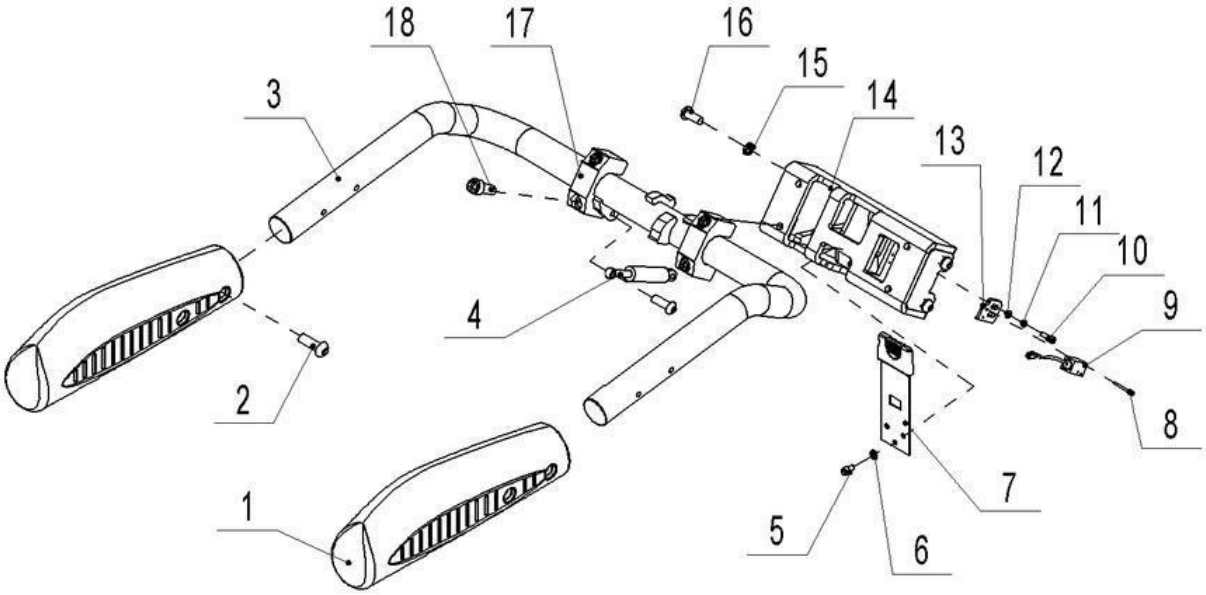


505646017501

**1= Supply as package. 2= Supply with constraints. 3= Phasing-out supply. 4= Supply as assembly. 5= Check other tables.**

## 02 Guard Arm (505646017501)

| No. | Item Code | Mark | Item Description | Qty. | Substitute | Note |
|---|---|---|---|---|---|---|
| 1 | 505617510002 | | Guard Arm Sleeve | 1 | | |
| 2 | 910200300025 | 1 | Screw | 5 | | |
| 3 | 505617510001 | | Guard Arm | 1 | | |
| 4 | 940400100006 | | Air Spring | 1 | | |
| 5 | 910200300017 | 1 | Screw | 3 | | |
| 6 | 910400500005 | 1 | Spring Washer | 3 | | |
| 7 | 505617510005 | | Leaf Spring | 1 | | |
| 8 | 910200500015 | 1 | Screw | 2 | | |
| 9 | 505633510001 | 2 | Proximity Switch | 1 | | |
| 10 | 910400500004 | 1 | Spring Washer | 2 | | |
| 11 | 910400100004 | 1 | Flat Washer | 2 | | |
| 12 | 910200200023 | 1 | Screw | 2 | | |
| 13 | 505618020026 | | Mounting Plate | 1 | | |
| 14 | 505617510000 | | Base | 1 | | |
| 15 | 910400500007 | 1 | Spring Washer | 4 | | |
| 16 | 910100300036 | 1 | Bolt | 4 | | |
| 17 | 505617520005 | | Fixing Base | 2 | | |
| 18 | 910200200080 | 1 | Screw | 4 | | |
| -- | 505617501000 | | Protective Arm Assembly | 1 | | |

**1= Supply as package. 2= Supply with constraints. 3= Phasing-out supply. 4= Supply as assembly. 5= Check other tables.**

## 03 Platform (505646018001)

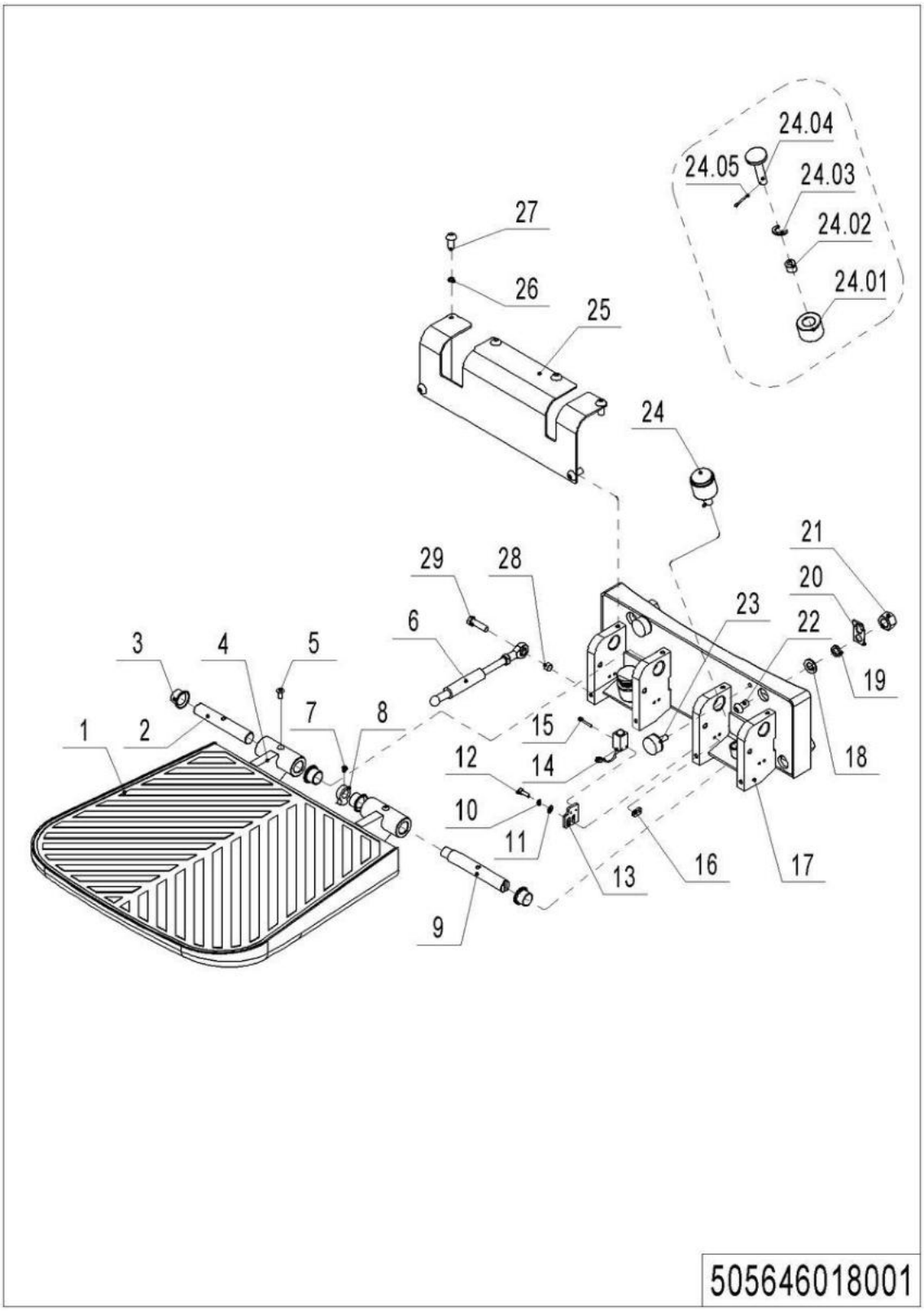


1= Supply as package. 2= Supply with constraints. 3= Phasing-out supply. 4= Supply as assembly. 5= Check other tables.

## 03 Platform (505646018001)

| No. | Item Code | Mark | Item Description | Qty. | Substitute | Note |
|---|---|---|---|---|---|---|
| 1 | 505618020018 | | Rubber Mat | 1 | | |
| 2 | 505618020020 | | Axle | 1 | | |
| 3 | 940500200008 | 1 | Bushing | 4 | | |
| 4 | 505618010000 | | Platform | 1 | | |
| 5 | 910200300018 | 1 | Screw | 2 | | |
| 6 | 940400100039 | | Air Spring | 1 | | |
| 7 | 910300400006 | 1 | Nut | 1 | | |
| 8 | 505618020024 | | Cam | 1 | | |
| 9 | 505618020017 | | Pin | 1 | | |
| 10 | 910400500004 | 1 | Spring Washer | 2 | | |
| 11 | 910400100004 | 1 | Flat Washer | 2 | | |
| 12 | 910200200023 | 1 | Screw | 2 | | |
| 13 | 505618020026 | | Mounting Plate | 1 | | |
| 14 | 910200500015 | 1 | Screw | 2 | | |
| 15 | 505633510002 | 2 | Proximity Switch | 1 | | |
| 16 | 505618020027 | | Mounting Plate | 1 | | |
| 17 | 505618010001 | | Mounting Base | 1 | | |
| 18 | 910400100008 | 1 | Flat Washer | 4 | | |
| 19 | 910400500008 | 1 | Spring Washer | 4 | | |
| 20 | 505618020025 | | Pipe Clip | 1 | | |
| 21 | 910300500006 | 1 | Nut | 4 | | |
| 22 | 910200200100 | 1 | Screw | 4 | | |
| 23 | 505618020016 | | Crash Pad | 2 | | |
| 24 | 505698510002 | | Buffer Kits | 2 | | |
| 24.01 | 505618020029 | | Crash Pad | 2 | | |
| 24.02 | 505618020030 | | Sleeve | 2 | | |
| 24.03 | 505618020032 | | Pad | 2 | | |
| 24.04 | 505618020021 | 1 | Pin | 2 | | |
| 24.05 | 910600600026 | 1 | Cotter Pin | 2 | | |
| 25 | 505618020019 | | Protective Cover | 1 | | |

**1= Supply as package. 2= Supply with constraints. 3= Phasing-out supply. 4= Supply as assembly. 5= Check other tables.**

## 03 Platform (505646018001) Continuation

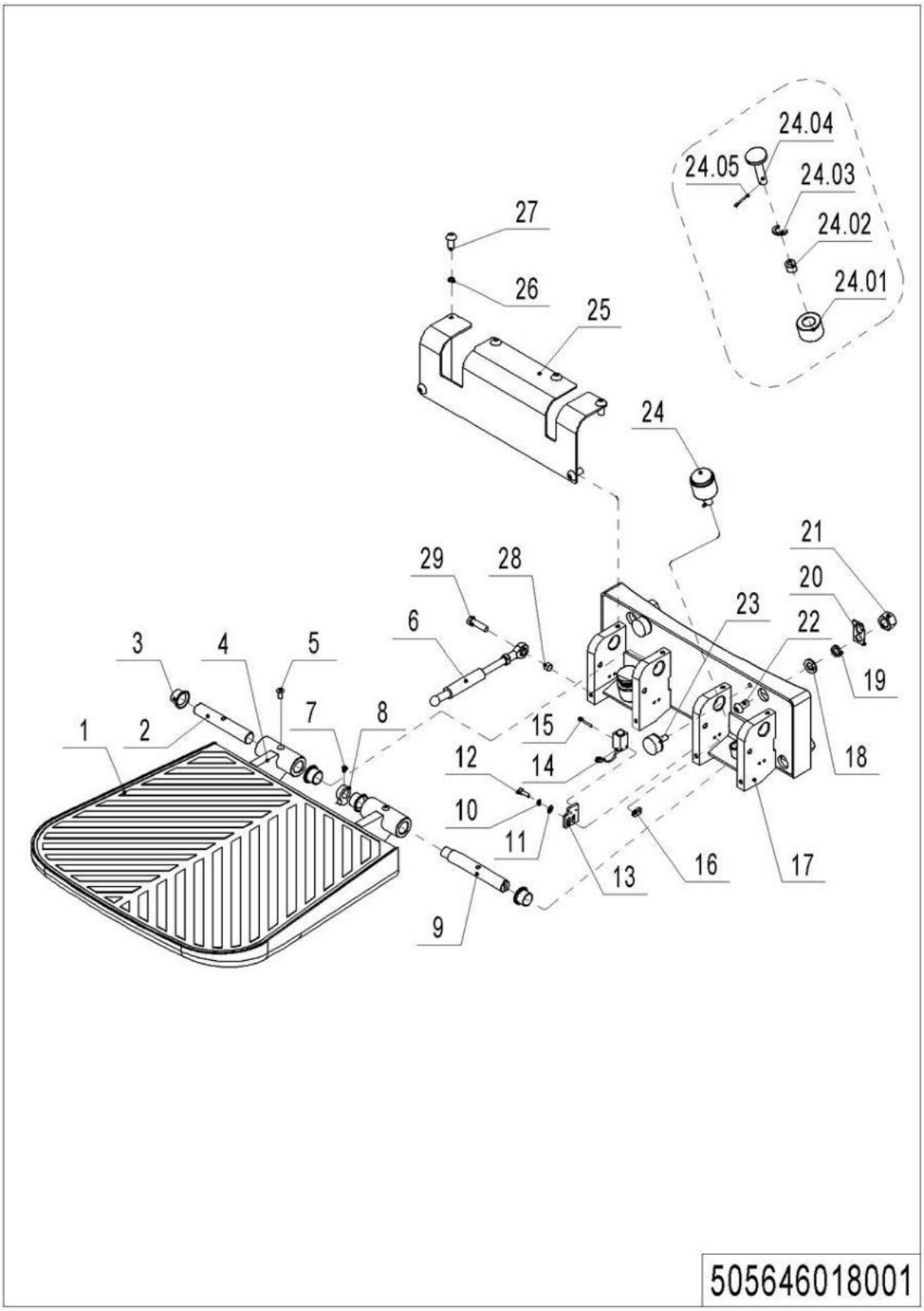


1= Supply as package. 2= Supply with constraints. 3= Phasing-out supply. 4= Supply as assembly. 5= Check other tables.

## 03 Platform (505646018001) Continuation

| No. | Item Code | Mark | Item Description | Qty. | Substitute | Note |
|---|---|---|---|---|---|---|
| 26 | 910400500005 | 1 | Spring Washer | 6 | | |
| 27 | 910200300017 | 1 | Screw | 6 | | |
| 28 | 505618020028 | 1 | Spacer Bush | 1 | | |
| 29 | 910100300024 | 1 | Bolt | 1 | | |
| -- | 505618001000 | | Footboard Kit | 1 | | |

**1= Supply as package. 2= Supply with constraints. 3= Phasing-out supply. 4= Supply as assembly. 5= Check other tables.**

# Chapter8: Others

## 01 Labels and Decals-US (201546047001)

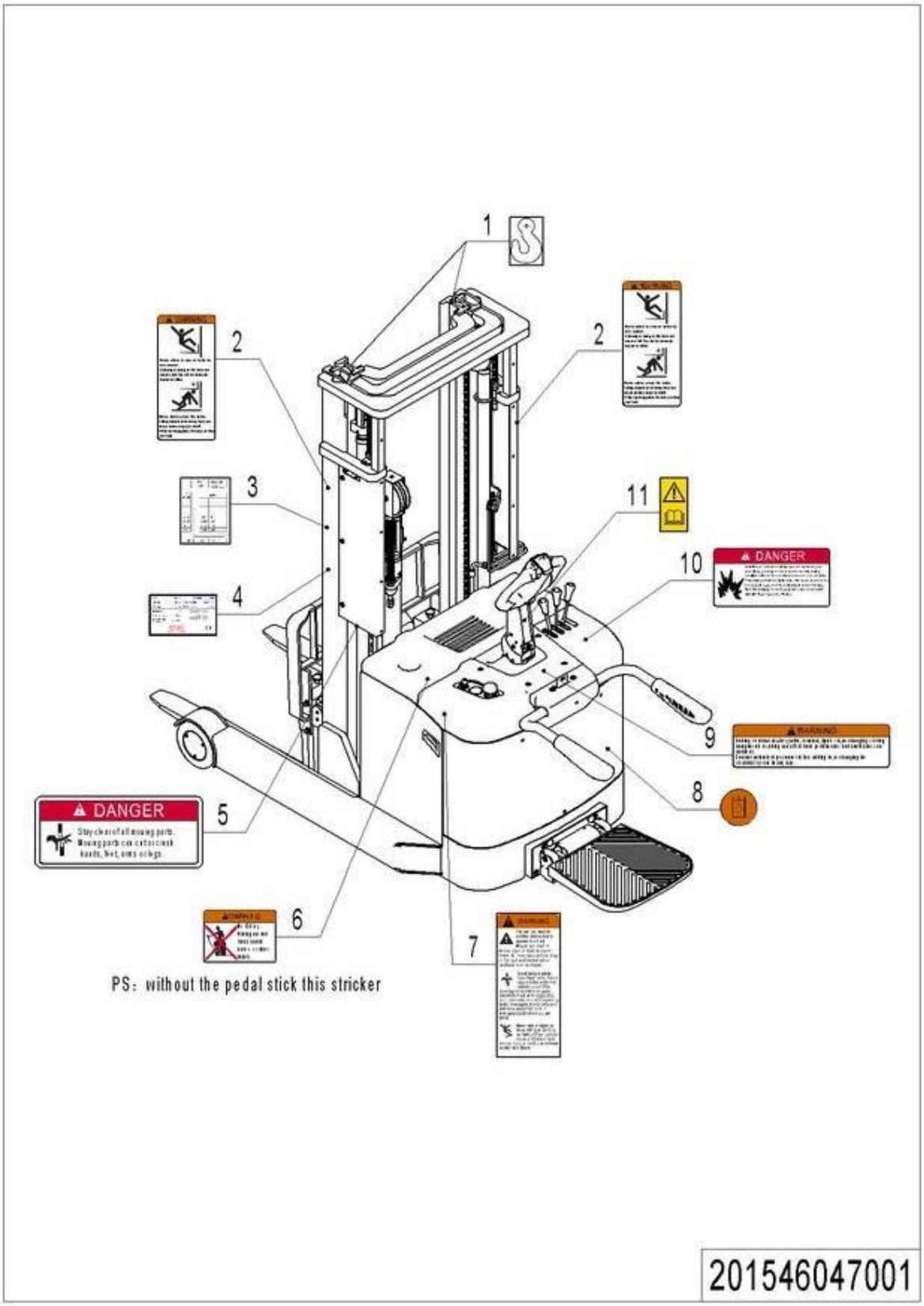


**1= Supply as package. 2= Supply with constraints. 3= Phasing-out supply. 4= Supply as assembly. 5= Check other tables.**

## 01 Labels and Decals-US (201546047001)

| No. | Item Code | Mark | Item Description | Qty. | Substitute | Note |
|---|---|---|---|---|---|---|
| 1 | 941200300001 | | Label | 2 | | |
| 2 | 941200100016 | | Label | 2 | | |
| 3 | 201547020000 | | Load Capacity Diagram | 1 | | |
| 4 | 201547020001 | | Truck data plate | 1 | | |
| 5 | 941200100014 | | Label | 1 | | |
| 6 | 941200100011 | | Label | 1 | | |
| 7 | 941200100009 | | Label | 1 | | |
| 8 | 941200300003 | | Label | 1 | | |
| 9 | 941200100010 | | Label | 1 | | |
| 10 | 941200100013 | | Label | 1 | | |
| 11 | 941200300002 | | Label | 1 | | |

**1= Supply as package. 2= Supply with constraints. 3= Phasing-out supply. 4= Supply as assembly. 5= Check other tables.**

## 02 Labels and Decals-EU (201546047002)

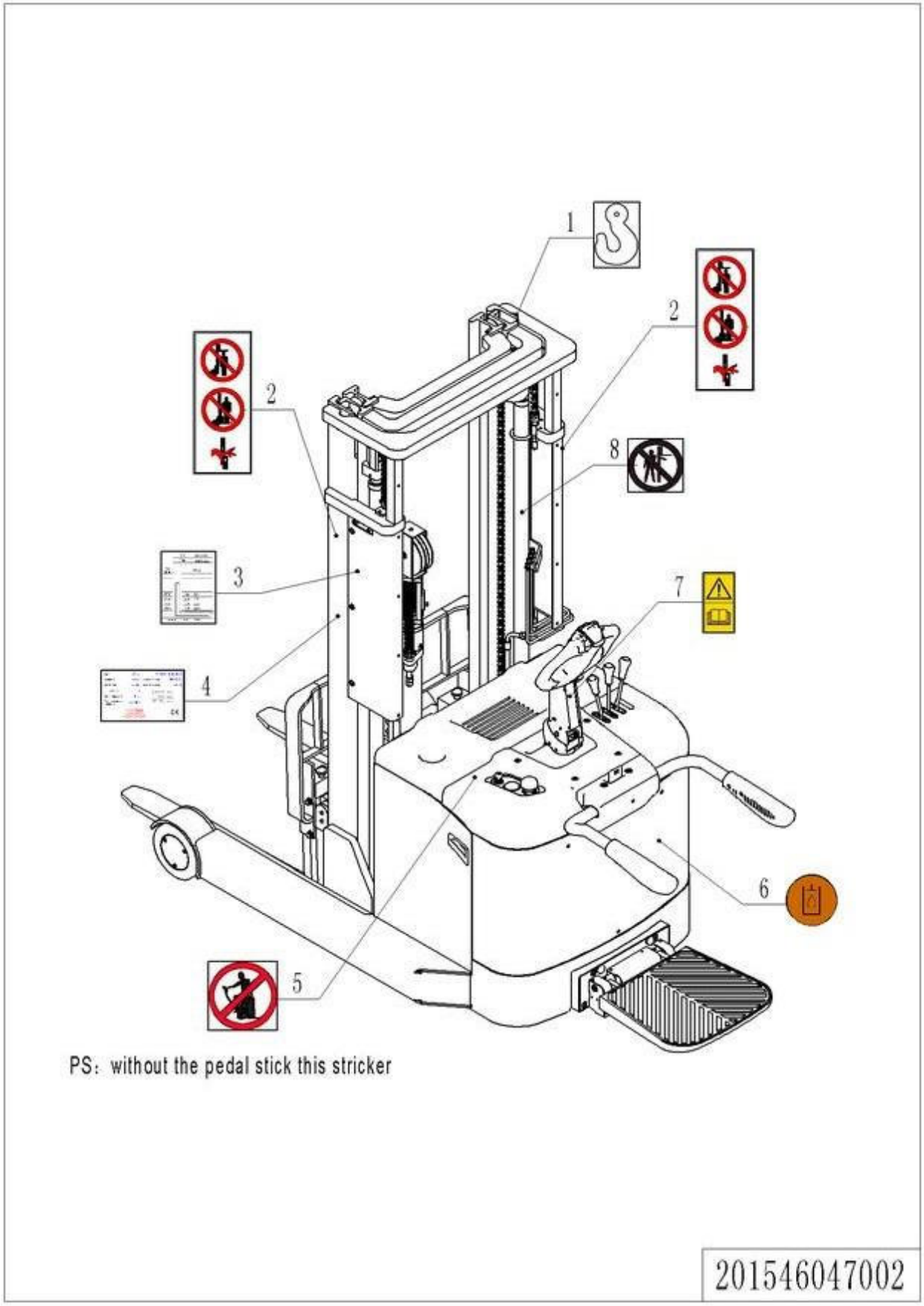


**1= Supply as package. 2= Supply with constraints. 3= Phasing-out supply. 4= Supply as assembly. 5= Check other tables.**

# 02 Labels and Decals-US (201546047001)

| No. | Item Code | Mark | Item Description | Qty. | Substitute | Note |
|---|---|---|---|---|---|---|
| 1 | 941200300001 | | Label | 2 | | |
| 2 | 941200100004 | | Label | 2 | | |
| 3 | 201547020000 | | Load Capacity Diagram | 1 | | |
| 4 | 201547020001 | | Truck data plate | 1 | | |
| 5 | 941200100011 | | Label | 1 | | |
| 6 | 941200300003 | | Label | 1 | | |
| 7 | 941200300002 | | Label | 1 | | |
| 8 | 941200100006 | | Label | 1 | | |

**1= Supply as package. 2= Supply with constraints. 3= Phasing-out supply. 4= Supply as assembly. 5= Check other tables.**

## 03 Battery Cover (201546021001)

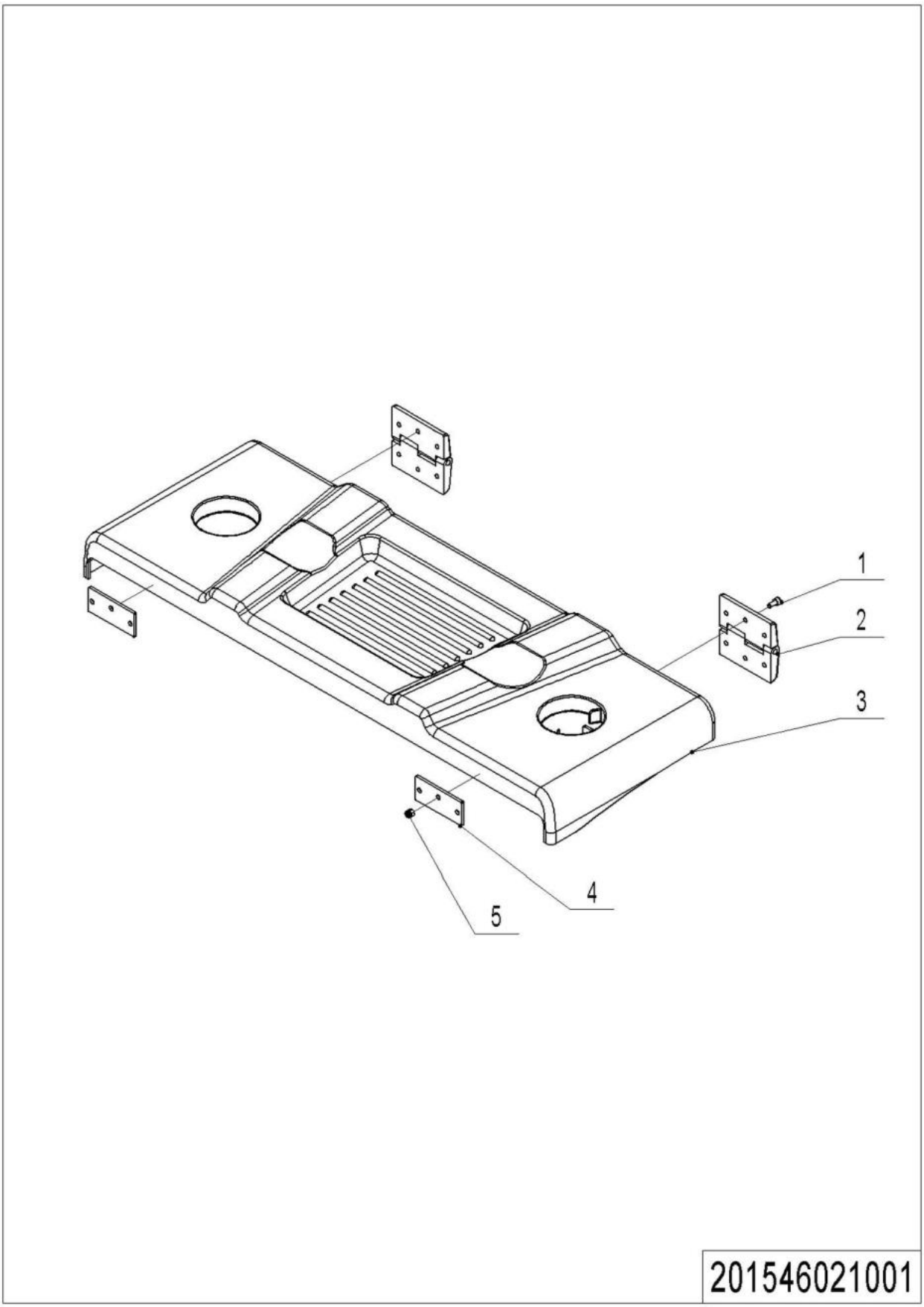


**1= Supply as package. 2= Supply with constraints. 3= Phasing-out supply. 4= Supply as assembly. 5= Check other tables.**

## 03 Battery Cover (201546021001)

| No. | Item Code | Mark | Item Description | Qty. | Substitute | Note |
|---|---|---|---|---|---|---|
| 1 | 910200200033 | 1 | Screw | 12 | | |
| 2 | 940801300001 | | Hinge | 2 | | |
| 3 | 206021020002 | | Cell Cover | 1 | | |
| 4 | 201021020000 | | Mounting Plate | 2 | | |
| 5 | 910300500003 | 1 | Nut | 12 | | |

**1= Supply as package. 2= Supply with constraints. 3= Phasing-out supply. 4= Supply as assembly. 5= Check other tables.**

# Appendix

## 01 Electrical Circuit Diagram (KORDEL, Lead-acid Battery)

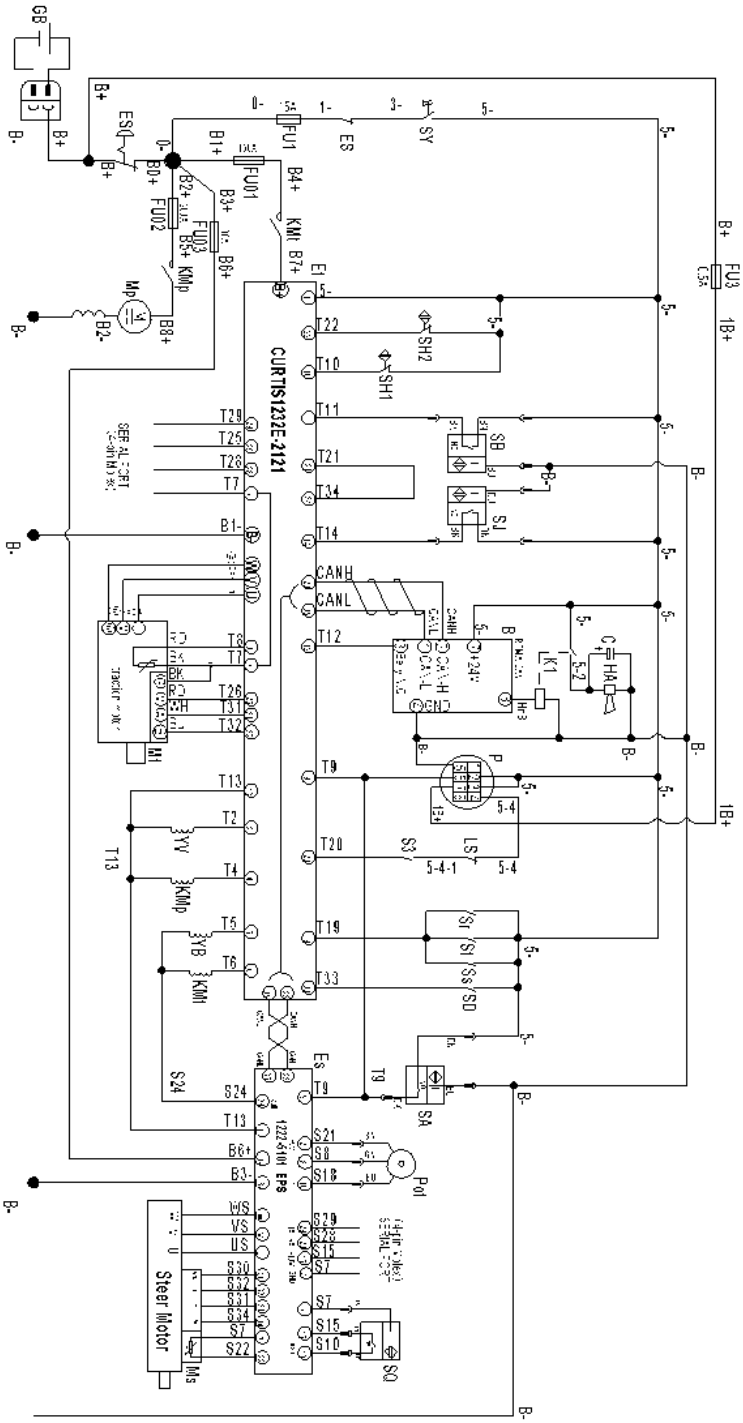


201546045501

1= Supply as package. 2= Supply with constraints. 3= Phasing-out supply. 4= Supply as assembly. 5= Check other tables.

# 02 Electrical Circuit Diagram (KORDEL, Lithium Battery)

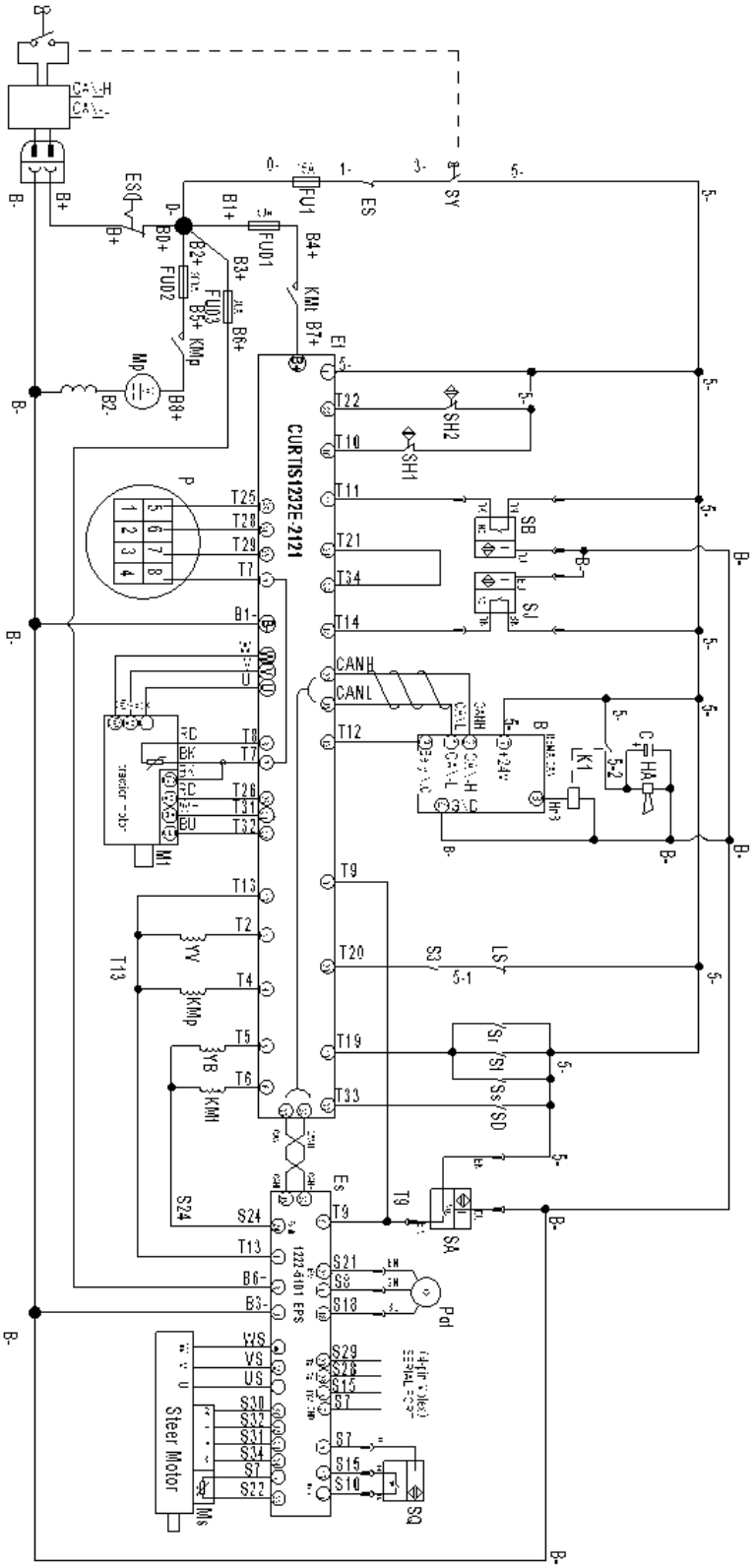


201546045502

**1= Supply as package. 2= Supply with constraints. 3= Phasing-out supply. 4= Supply as assembly. 5= Check other tables.**

# 03 Electrical Circuit Diagram (ZD, Lead-acid Battery)

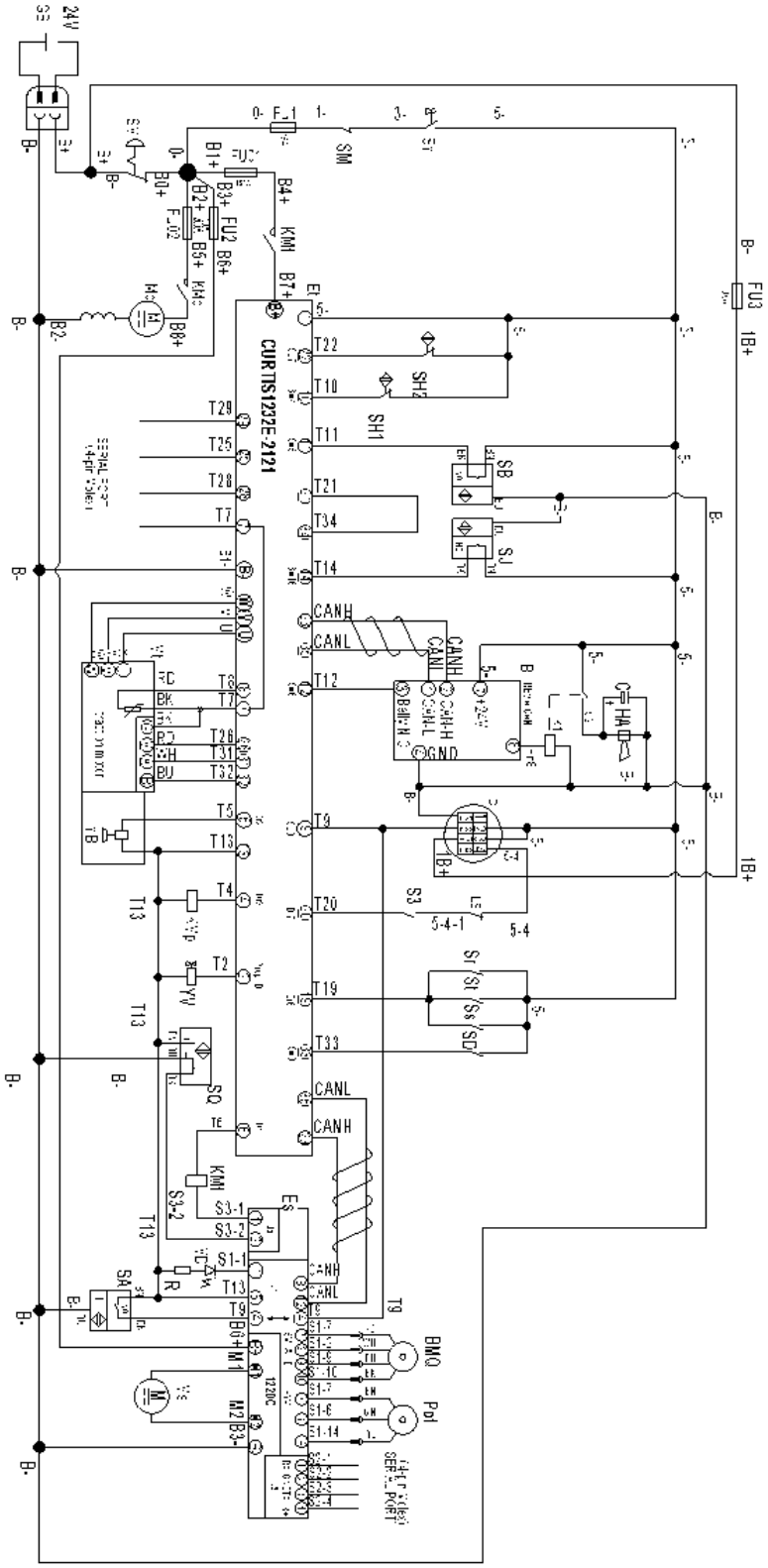


201546045503

1= Supply as package. 2= Supply with constraints. 3= Phasing-out supply. 4= Supply as assembly. 5= Check other tables.

# 04 Electrical Circuit Diagram (ZD, Lithium Battery)

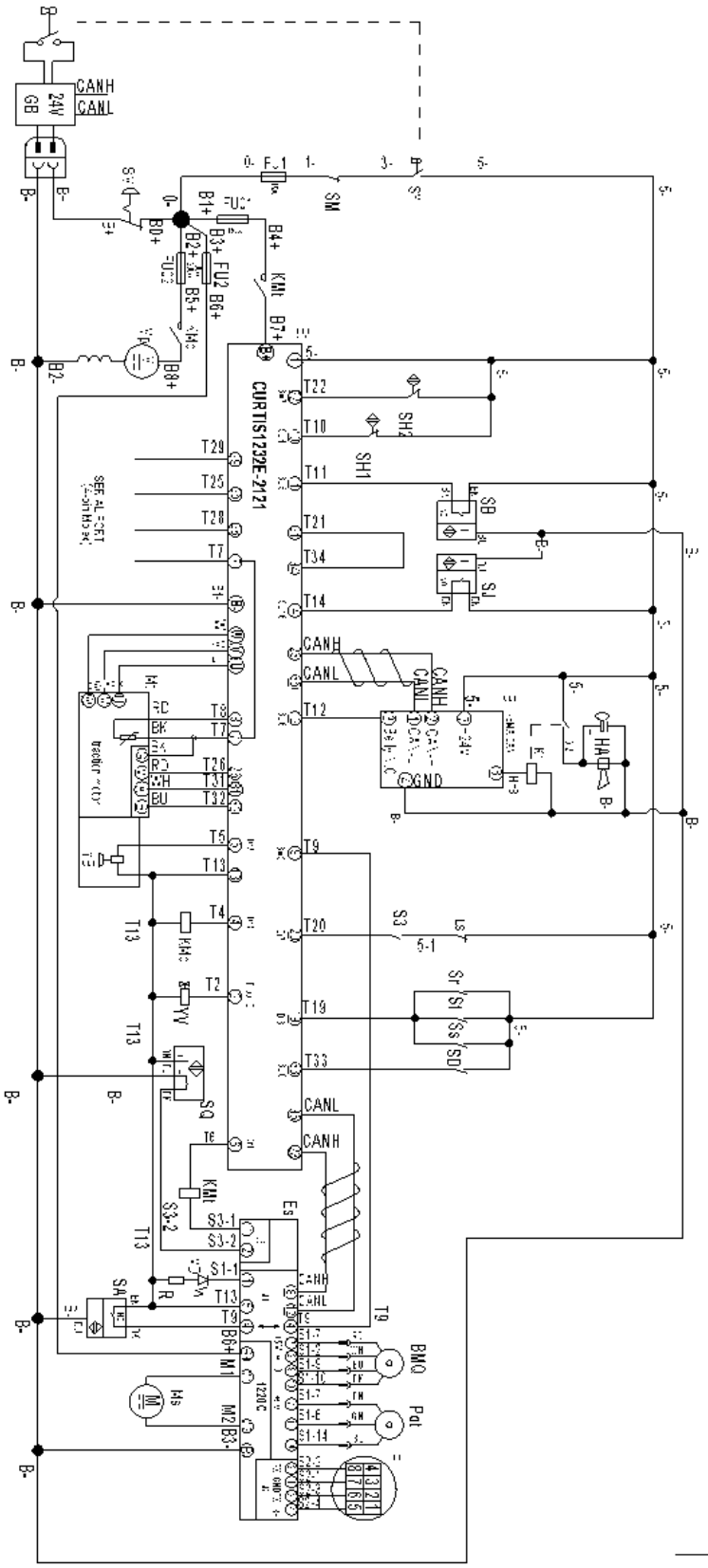


201546045504

1= Supply as package. 2= Supply with constraints. 3= Phasing-out supply. 4= Supply as assembly. 5= Check other tables.

# 05 Hydraulic Circuit Diagram

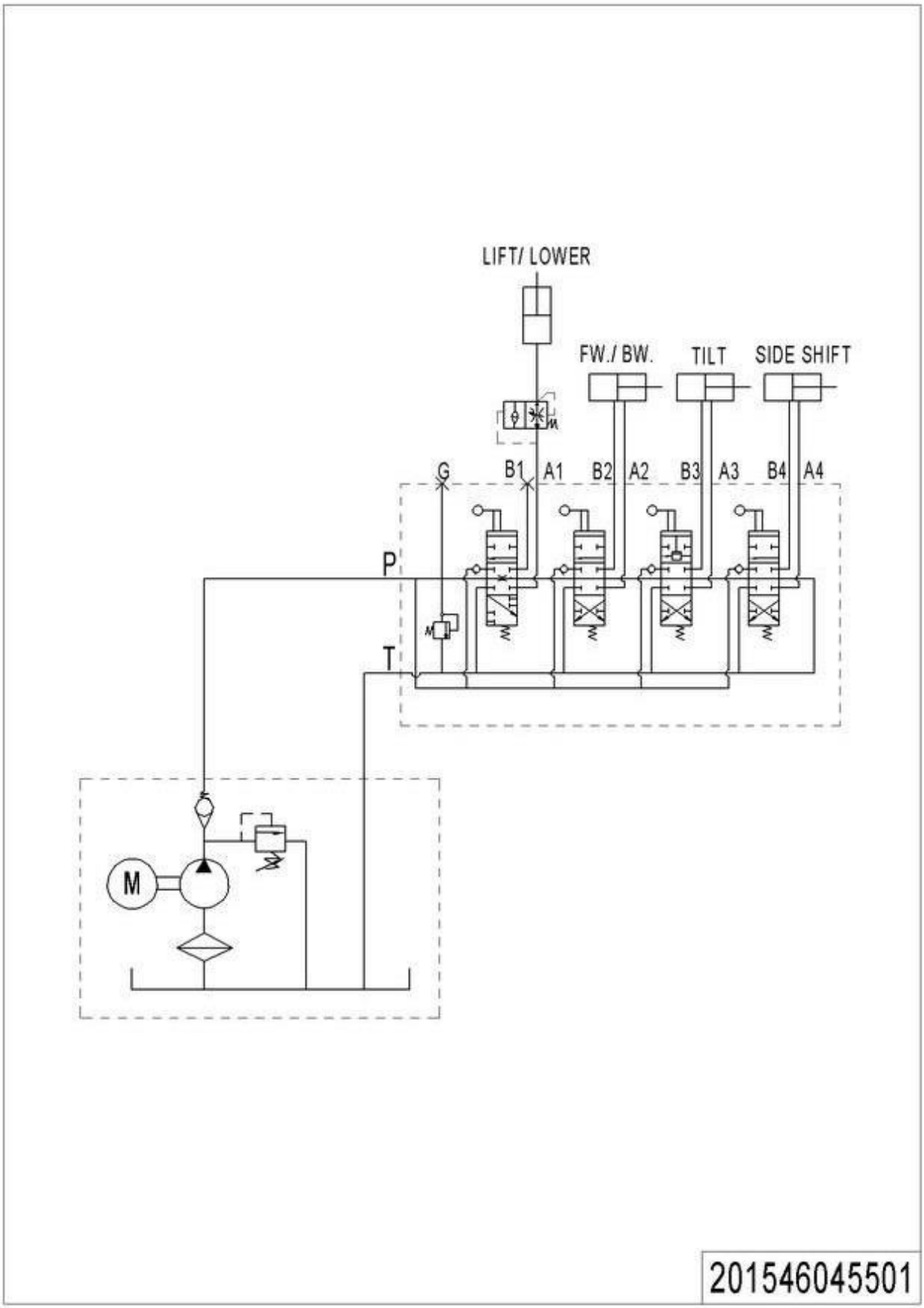

# 06 Consumable Parts List

| No. | Item Code | Item Description | Qty. | Chapter/ Section/ Number |
|---|---|---|---|---|
| 1 | 940200100011 | Main Roller | 4 | Chapter1/01/18 |
| 2 | 201598510003 | Seal Kit | 2 | Chapter2/05/4.01Chapter2/06/4.01 |
| 2 | 201598510003 | Seal Kit | | Chapter2/07/6.01Chapter2/08/8.01 |
| 3 | 201598510002 | Seal Kit | 1 | Chapter2/03/17.01Chapter2/04/19.01 |
| 3 | 201598510002 | Seal Kit | | Chapter2/07/9.01Chapter2/08/11.01 |
| 4 | 201598510001 | Seal Kit | 1 | Chapter2/01/2.01Chapter2/03/2.01 |
| 5 | 201598510004 | Seal Kit | 1 | Chapter2/03/10.01Chapter2/04/14.01 |
| 5 | 201598510004 | Seal Kit | | Chapter2/05/2.01Chapter2/06/2.01 |
| 5 | 201598510004 | Seal Kit | | Chapter2/07/16.01Chapter2/08/18.01 |
| 6 | 940500400002 | Bearing | 4 | Chapter4/06/11Chapter4/07/11 |
| 6 | 940500400002 | Bearing | | Chapter4/08/11 |
| 7 | 940200100006 | Main Roller | 4 | Chapter4/01/25Chapter4/05/26 |
| 8 | 940200200007 | Side Roller | 2 | Chapter4/01/23.03Chapter4/05/24.05 |
| 9 | 940200500001 | Sprocket Bearing | 2 | Chapter4/02/2Chapter4/04/2 |
| 10 | 910700200023 | Bearing | 4 | Chapter5/05/1 |
| 11 | 940300300024 | WheelΦ210x85 | 2 | Chapter5/05/2 |
| 12 | 910700200019 | Bearing | 4 | Chapter5/04/11.01 |
| 13 | 940300300019 | WheelΦ124x60 | 2 | Chapter5/04/11.02 |
| 14 | 532616520003 | Bushing | 2 | Chapter5/04/9 |
| 15 | 532616520001 | Check Ring | 2 | Chapter5/04/4 |
| 16 | 910700400004 | Bearing | 4 | Chapter5/04/3 |
| 17 | 940500200002 | Bushing | 2 | Chapter5/01/8 |
| 18 | 940400100003 | Air Spring | 1 | Chapter5/01/13 |
| 19 | 920400100007 | Connector | 1 | Chapter6/06/2 |
| 20 | 920400100017 | Connector | 1 | Chapter6/07/2 |
| 21 | 940400100006 | Air Spring | 1 | Chapter7/02/4 |
| 22 | 940400100039 | Air Spring | 1 | Chapter7/03/6 |
| 23 | 505617510005 | Leaf Spring | 1 | Chapter7/02/7 |
| 24 | 940500200008 | Bushing | 4 | Chapter7/03/3 |
| 25 | 505698510002 | Buffer Kits | 2 | Chapter7/03/24 |
| 26 | 940801300001 | Hinge | 2 | Chapter8/03/2 |

**1= Supply as package. 2= Supply with constraints. 3= Phasing-out supply. 4= Supply as assembly. 5= Check other tables.**