NOBLELIFT

Scan QR Code for More

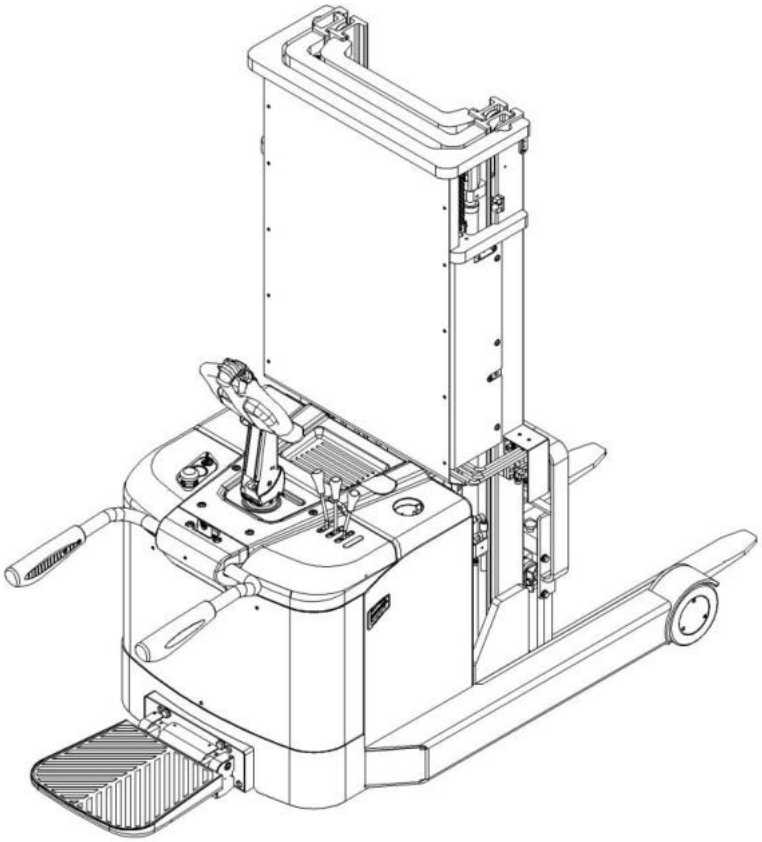

Electric Pallet Stacker

PS15RMPLUS

PARTS MANUAL

202046020101

Version V01

Truck Identification Number From:

Parts Manual

PS15RMPLUS-PM02EN

Please order spare parts from authorized dealers of Noblelift Intelligent Equipment Co., LTD.

In order to avoid wrong delivery, all the orders for spare parts should specify the following items:

- Truck model, identification number and manufacture year.
- Orders for spare parts of mast, hydraulic transmission unit, steering axle, motor, etc. shall indicate the manufacture number of these parts.
- Codes for Noblelift spare parts are shown in the table of parts manual. Please also pay attention to the description of supply status, order quantity, etc. (check the number listed in "Mark" column of the parts manual).

"Mark" Column:

The unmarked indicates the parts are in short supply cycle.

Number 1: supply as package. Indicating these that parts are small parts and seal parts, which are supplied in package unit and in short supply cycle.

Number 2: supply with constraints. Indicating that these spare parts are not in stock and will be prepared for production after receiving the order from customers, which are in long supply cycle.

Number 3: phasing-out supply. Indicating that these parts will be replaced by new parts due to technical improvements and the current stock will not be available when these parts run out. Please check the description of technical improvements notice.

Number 4: supply as assembly. Indicating that these parts are assembly parts defined by manufacture process, which cannot be supplied as a single part.

Number 5: check other tables.

This parts manual is the property of Noblelift and can be shared under the confidential agreement only, Noblelift has the right to claim for compensation of any unauthorized use. Copy without permission is not allowed. Figures in the manual are not limited by the original design. Noblelift Intelligent Equipment Co., LTD reserves the right to improve the products for continuous technology progress.

Table of Contents

Chapter 1: Drive System....1
01 Drive Unit (201546013501)....1
Chapter2：Hydraulic System....3
01 Truck Hydraulic Circuit 3 (202046025001)....3
02 Multiway Valve-Circuit 3 (201546025002)....5
03 Truck Hydraulic Circuit 4 (202046025501)....7
04 Multiway Valve-Circuit 4 (201546025502)....9
05 Single Mast Hydraulic Circuit 3 (201546043001)....11
06 Single Mast Hydraulic Circuit 4 (201546043002)....13
06 Single Mast Hydraulic Circuit 4 (201546043002) Continuation....15
07 Double Mast Hydraulic Circuit 3 (201546044001)....17
08 Double Mast Hydraulic Circuit 4 (201546044002)....19
09 Triple Mast Hydraulic Circuit 3 (201546044501)....21
09 Triple Mast Hydraulic Circuit 3 (201546044501) Continuation....23
10 Triple Mast Hydraulic Circuit 4 (201546044502)....25
10 Triple Mast Hydraulic Circuit 4 (201546044502) Continuation....27
11 Oil Tank (201546019001)....29
12 Pump Unit (3.0Kw, 3.3cc) (532646023502)....31
Chapter3：Truck Frame....33
01 Chassis (202046021501)....33
01 Chassis (202046021501) Continuation....36
02 Chassis (Side Extraction Battery) (202046021502)....38
02 Chassis (Side Extraction Battery) (202046021502) Continuation....40
Chapter4: Mast....42
01 Outer Mast (Double/ Triple Mast) (201546044503)....42
01 Outer Mast (Double/ Triple Mast) (201546044503) Continuation....44
02 Middle Mast (Triple Mast) (201546044504)....46
03 Inner Mast (Triple Mast) (201546044505)....48
03 Inner Mast (Triple Mast) (201546044505) Continuation....50
04 Inner Mast (Double Mast) (201546044003)....52
05 Single Mast (201546043003)....54
05 Single Mast (201546043003) Continuation....56
06 Fork Carriage (Single Mast) (201546038001)....58
07 Fork Carriage (Double Mast) (201546038002)....60
08 Fork Carriage (Triple Mast) (201546038003)....62
Chapter5：Steering System, Braking System, Wheels....64
01 Tiller Unit (505646011001)....64
02 Control Handle (505646010002)....66
03 EPS --- Electric Power Steering (201546031501)....68
04 Caster (532646016501)....70
05 Load Wheel (202046017001)....72

Chapter6: Electrical Parts 74
01 Wire Harness (KORDEL) (201546033001) 74
02 Wire Harness (ZD) (201546033002) 76
03 Controller (KORDEL) (201546033003) 78
04 Controller (ZD) (201546033004) 80
05 Charger (201546036501) 82
06 Traction Battery (201546037001) 84
07 Traction Battery(Li) (201546037001) 86
08 Display Assembly (505646010001) 88
09 Display Assembly(Li) (201046010001) 90
Chapter7: Special Parts 92
01 Load Backrest (216546040501) 92
02 Guard Arm (505646017501) 94
03 Platform (505646018001) 96
03 Platform (505646018001) Continuation 98
Chapter8: Others 100
01 Labels and Decals-US (201546047001) 100
02 Labels and Decals-EU (201546047002) 102
03 Battery Cover (201546021001) 104
Appendix 106
01 Electrical Circuit Diagram (KORDEL, Lead-acid Battery) 106
02 Electrical Circuit Diagram (KORDEL, Lithium Battery) 107
03 Electrical Circuit Diagram (ZD, Lead-acid Battery) 108
04 Electrical Circuit Diagram (ZD, Lithium Battery) 109
05 Hydraulic Circuit Diagram 110
06 Consumable Parts List 111

Chapter 1: Drive System

01 Drive Unit (**201546013501**)

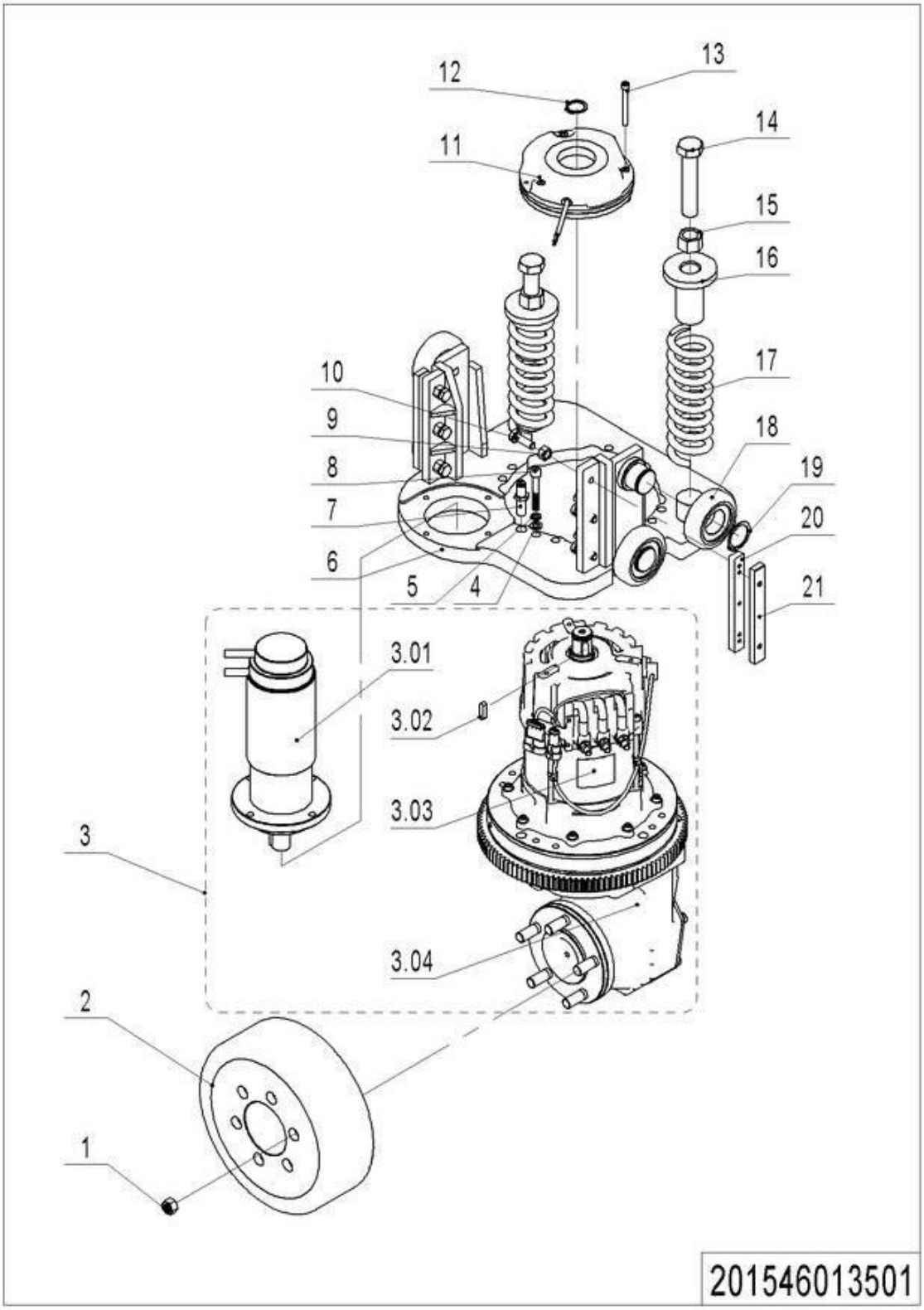

1= Supply as package. 2= Supply with constraints. 3= Phasing-out supply. 4= Supply as assembly. 5= Check other tables.

01 Drive Unit (201546013501)

No.	Item Code	Mark	Item Description	Qty.	Substitute	Note
1	275015520005	1	Nut	5		
2	940300400002		WheelΦ250x82	1		
3	940900600003		Steering Unit	1		
3	940900600004		Steering Unit	1		
3.01	201598510000		Steer Unit	1		
3.01	920900100050		Motor	1		
3.02	910600800019	1	Flat Key	1		
3.03	201098510003		Motor	1		
3.04	201098510004		Gear Box	1		
4	910400100006	1	Flat Washer	6		
5	910400500006	1	Spring Washer	6		
6	201013510001		Wheel Carrier	1		
7	920200400008		Proximity Switch	1		
8	910200200064	1	Screw	6		
9	910300100007	1	Nut	6		
10	910100300037	1	Bolt	6		
11	940700100002		Brake	1		
12	910401300014		Circlip	1		
13	910200200046	1	Screw	3		
14	910100300088	1	Bolt	2		
15	910300100012	1	Nut	2		
16	216513520003		Axe	2		
17	201013520011		Spring	2		
18	940200100011		Main Roller	4		
19	910401300018	1	Circlip	4		
20	201013520000		Mounting Plate	2		
21	940500500001		Wear Plate	2		

1= Supply as package. 2= Supply with constraints. 3= Phasing-out supply. 4= Supply as assembly. 5= Check other tables.

Chapter2：Hydraulic System

01 Truck Hydraulic Circuit 3 (202046025001)

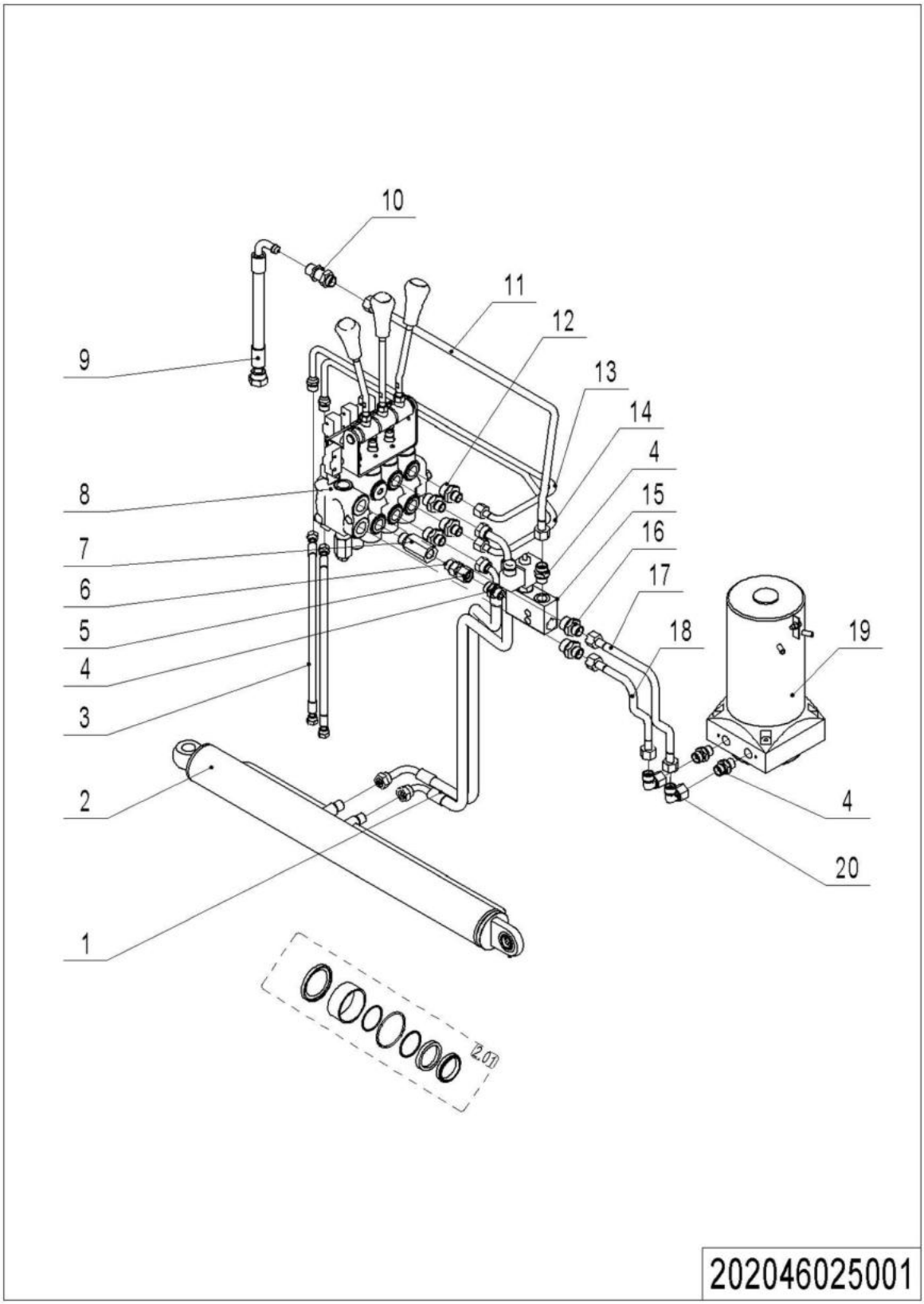

1= Supply as package. 2= Supply with constraints. 3= Phasing-out supply. 4= Supply as assembly. 5= Check other tables.

01 Truck Hydraulic Circuit 3 (202046025001)

No.	Item Code	Mark	Item Description	Qty.	Substitute	Note
1	201025020016		Hose	2		
2	202020010010		Cylinder	1		
2.01	201598510001		Seal Kit	1		
3	202025020000		Hose	2		
4	950400300009		Joint	4		
5	950400100001		Joint	1		
6	950600400003		Throttle Valve	1		
7	201025020010		Multitandem Valve	1		
8	201025001001		Multi-way Valve	1		Check 201546025002
9	202025020001		Hose	1		
10	950400500002		Joint	1		
11	201025020011		Steel Tube	1		
12	950400400012		Joint	4		
13	201025020012		Steel Tube	1		
14	201025020013		Steel Tube	1		
15	950700200004		Valve	1		
16	201025020019		Adapter	2		
17	201025020017		Steel Tube	1		
18	201025020018		Steel Tube	1		
19	950900100064		Pump Unit	1		Check 532646023502
20	950400200004		Joint	2		

1= Supply as package. 2= Supply with constraints. 3= Phasing-out supply. 4= Supply as assembly. 5= Check other tables.

02 Multiway Valve-Circuit 3 (201546025002)

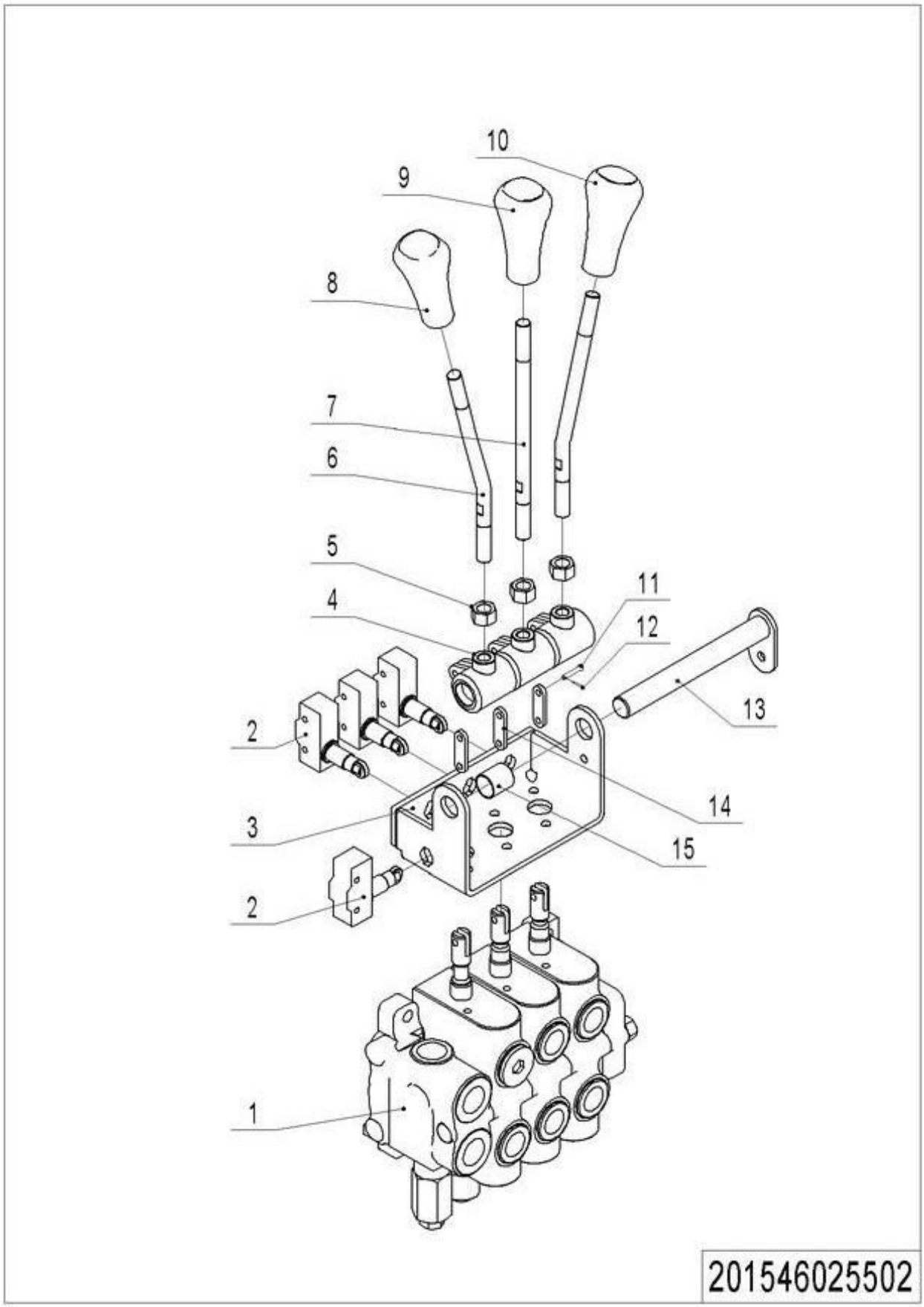

1= Supply as package. 2= Supply with constraints. 3= Phasing-out supply. 4= Supply as assembly. 5= Check other tables.

02 Multiway Valve-Circuit 3 (201546025002)

No.	Item Code	Mark	Item Description	Qty.	Substitute	Note
1	950700100002		Multi-way Valve	1		
2	920200300004		Microswitch	4		
3	201025010000		Mounting Rack	1		
4	201025020003		Bracket	3		
5	910300100007		Nut	3		
6	201025020004		Joystick	2		
7	201025020005		Joystick	1		
8	216525020010		Knob	1		
9	216525020011		Knob	1		
10	216525020012		Knob	1		
11	910600700002	1	Pin	6		
12	910600600005	1	Cotter Pin	6		
13	201025010001		Pin	1		
14	201025020008	1	Plate	3		
15	940500100007	1	Bushing	3		

1= Supply as package. 2= Supply with constraints. 3= Phasing-out supply. 4= Supply as assembly. 5= Check other tables.

03 Truck Hydraulic Circuit 4 (202046025501)

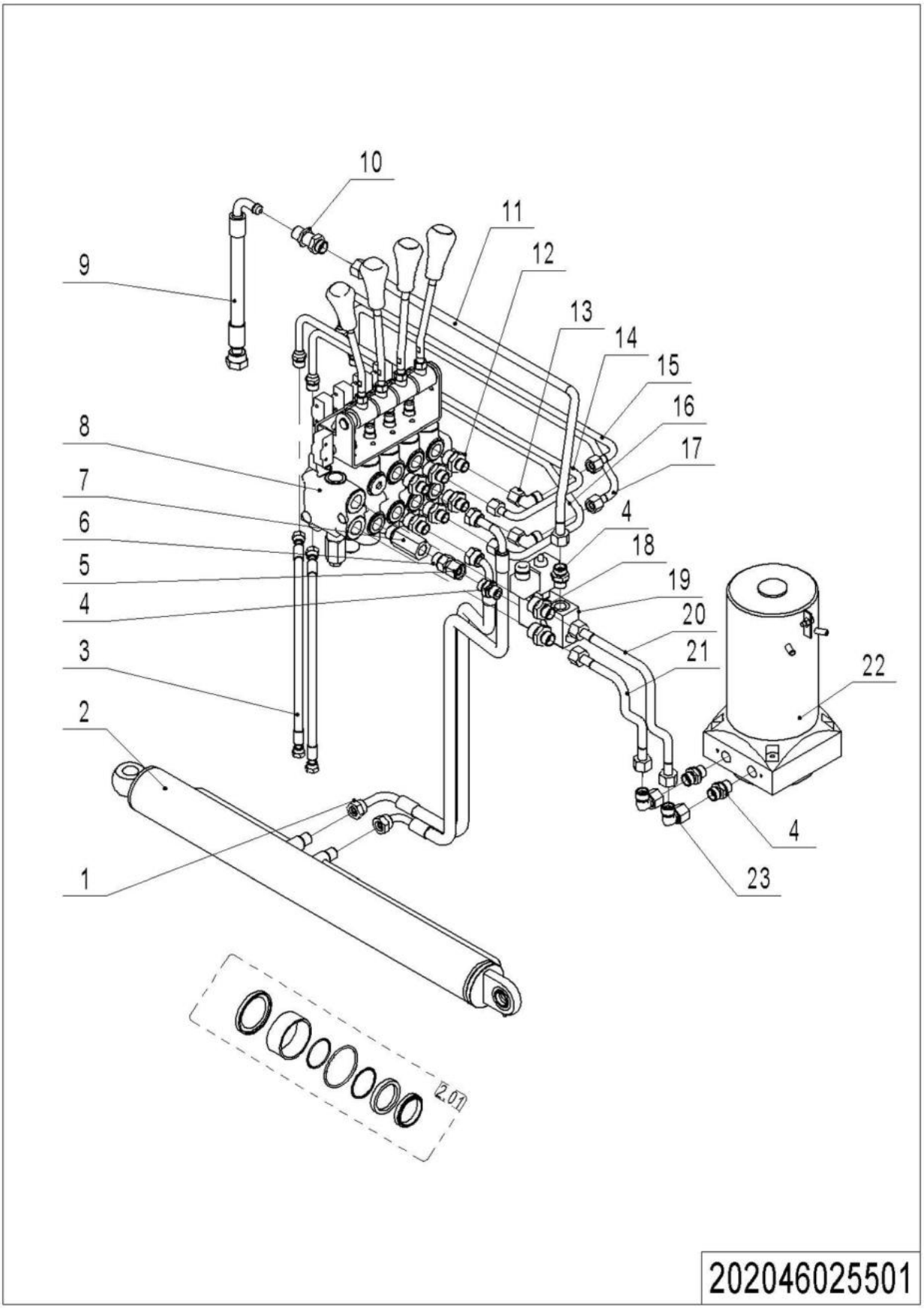

1= Supply as package. 2= Supply with constraints. 3= Phasing-out supply. 4= Supply as assembly. 5= Check other tables.

03 Truck Hydraulic Circuit 4 (202046025501)

No.	Item Code	Mark	Item Description	Qty.	Substitute	Note
1	201025020016		Hose	2		
2	202020010011		Cylinder	1		
2.01	201598510001		Seal Kit	1		
3	202025020000		Hose	2		
4	950400300009		Joint	4		
5	950400100001		Joint	1		
6	950600400003		Throttle Valve	1		
7	201025020010		Multitandem Valve	1		
8	201025501001		Multi-way Valve	1		Check 201546025502
9	202025020001		Hose	1		
10	950400500002		Joint	1		
11	201025020011		Steel Tube	1		
12	950400400012		Joint	6		
13	950400200003		Joint	2		
14	201025020012		Steel Tube	1		
15	201025520001		Steel Tube	1		
16	201025020013		Steel Tube	1		
17	201025520000		Steel Tube	1		
18	201025020019		Adapter	2		
19	950700200004		Valve	1		
20	201025020017		Steel Tube	1		
21	201025020018		Steel Tube	1		
22	950900100064		Pump Unit	1		Check 532646023502
23	950400200004		Joint	2		

1= Supply as package. 2= Supply with constraints. 3= Phasing-out supply. 4= Supply as assembly. 5= Check other tables.

04 Multiway Valve-Circuit 4 (201546025502)

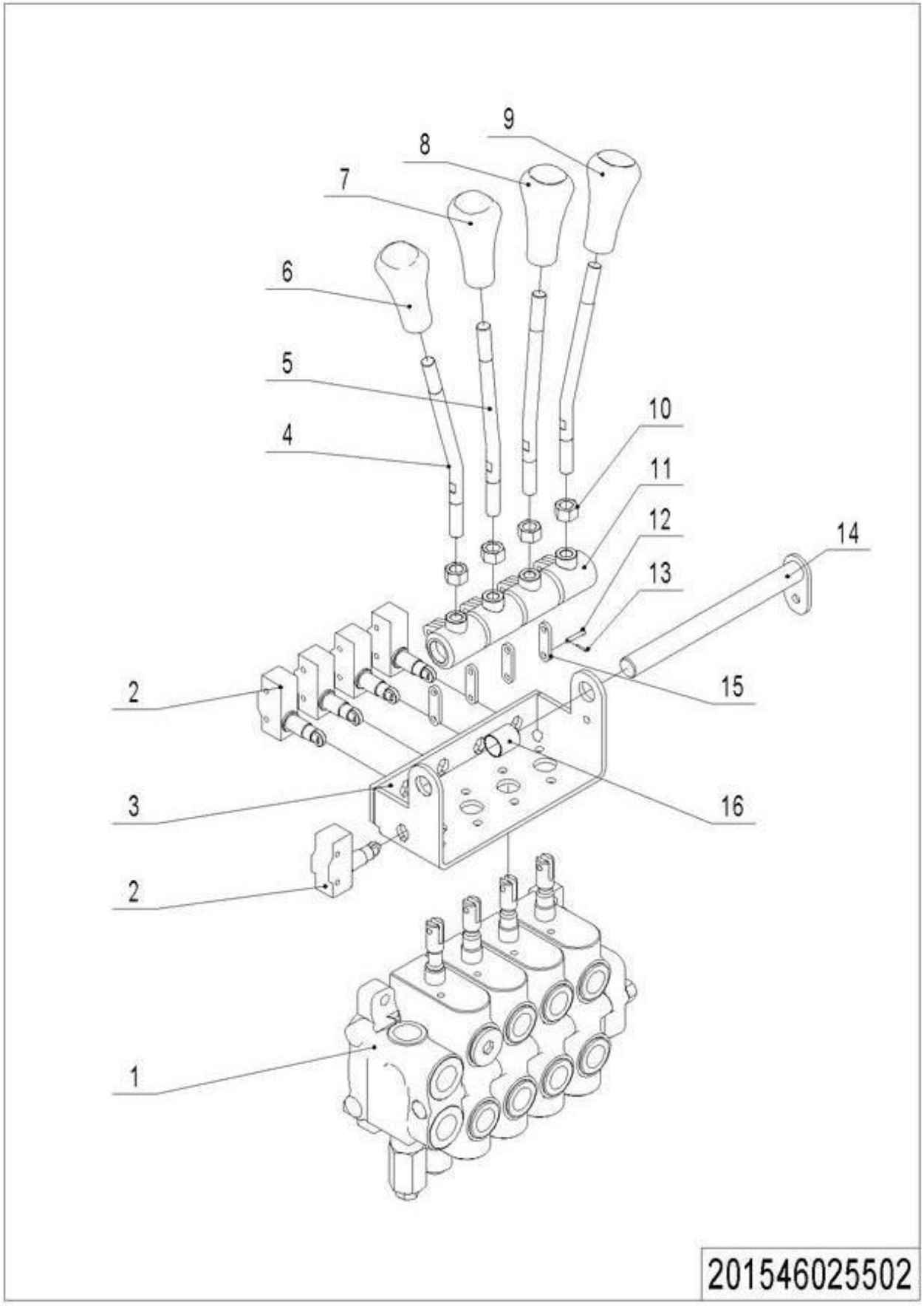

1= Supply as package. 2= Supply with constraints. 3= Phasing-out supply. 4= Supply as assembly. 5= Check other tables.

04 Multiway Valve-Circuit 4 (201546025502)

No.	Item Code	Mark	Item Description	Qty.	Substitute	Note
1	950700100005		Multi-way Valve	1		
2	920200300004		Microswitch	5		
3	201025510000		Mounting Rack	1		
4	201025020004		Joystick	2		
5	201025520004		Joystick	2		
6	216525020010		Knob	1		
7	216525020011		Knob	1		
8	216525020012		Knob	1		
9	216525520000		Knob	1		
10	910300100007		Nut	4		
11	201025020003		Bracket	4		
12	910600700002	1	Pin	8		
13	910600600005	1	Cotter Pin	8		
14	201025510001		Pin	1		
15	201025020008	1	Plate	4		
16	940500100007	1	Bushing	4		

1= Supply as package. 2= Supply with constraints. 3= Phasing-out supply. 4= Supply as assembly. 5= Check other tables.

05 Single Mast Hydraulic Circuit 3 (201546043001)

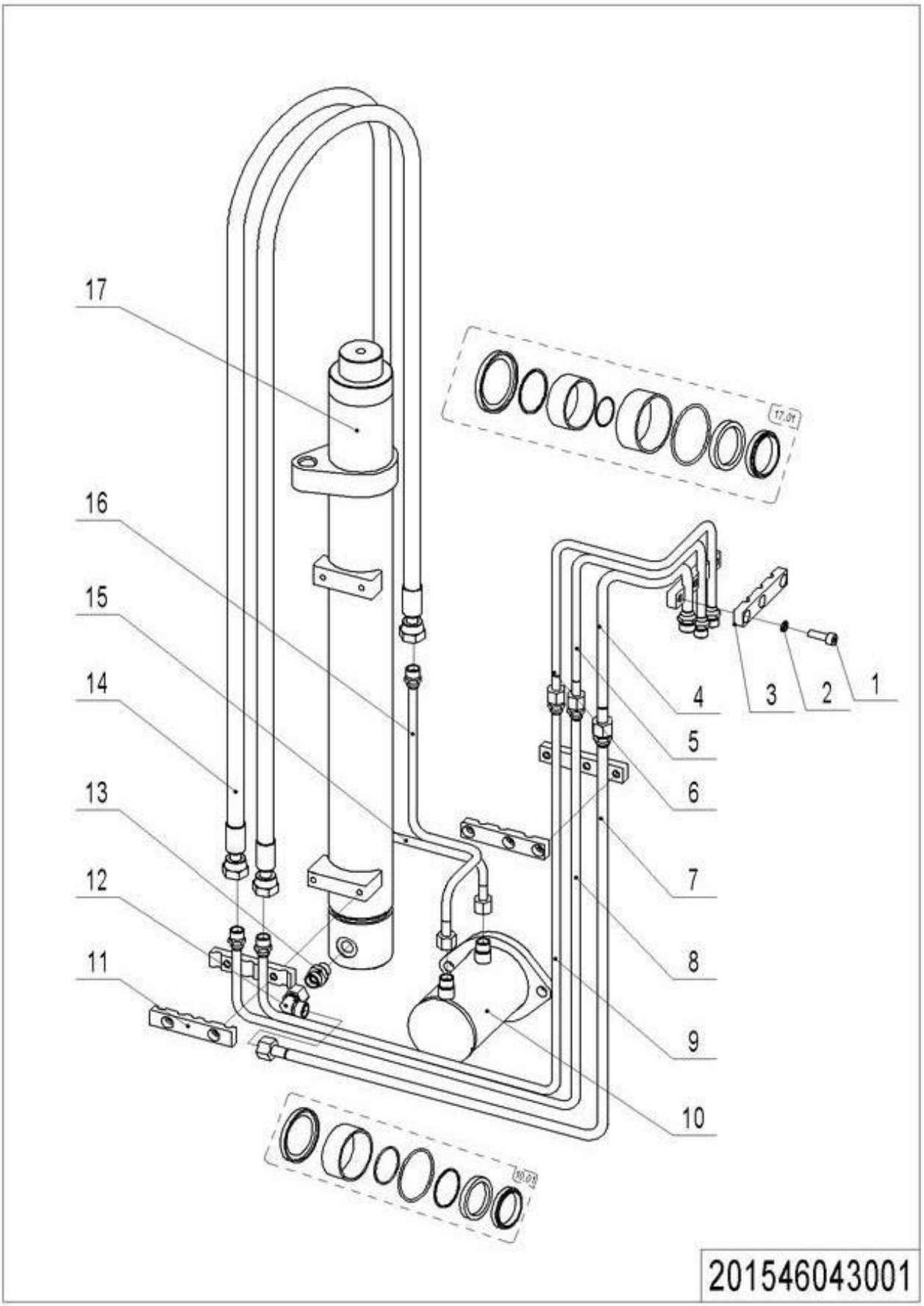

1= Supply as package. 2= Supply with constraints. 3= Phasing-out supply. 4= Supply as assembly. 5= Check other tables.

05 Single Mast Hydraulic Circuit 3 (201546043001)

No.	Item Code	Mark	Item Description	Qty.	Substitute	Note
1	910200200058	1	Screw	6		
2	910400500006	1	Spring Washer	6		
3	201044520022	1	Pipe Clip	4		
4	201043020009		Steel Tube	1		
5	201043020010		Steel Tube	1		
6	201043020011		Steel Tube	1		
7	201543020013		Steel Tube	1		
8	201543020014		Steel Tube	1		
9	201543020015		Steel Tube	1		
10	201520510000		Cylinder	1		
10.01	201598510004		Seal Kit	1		
11	201044520062	1	Pipe Clip	2		
12	950400200004		Joint	1		
13	951000600001		Explosion Proof Valve	1		
14	201043020015		Hose	2		4800/1600
14	201044520092		Hose	2		3600/1200
14	201043020017		Hose	2		1800
15	201044520073		Steel Tube	1		
16	201044520074		Steel Tube	1		
17	201544510013		Cylinder	1		4800/1600
17	201544510015		Cylinder	1		3600/1200
17	201544510016		Cylinder	1		1800
17.01	201598510002		Seal Kit	1		

1= Supply as package. 2= Supply with constraints. 3= Phasing-out supply. 4= Supply as assembly. 5= Check other tables.

06 Single Mast Hydraulic Circuit 4 (201546043002)

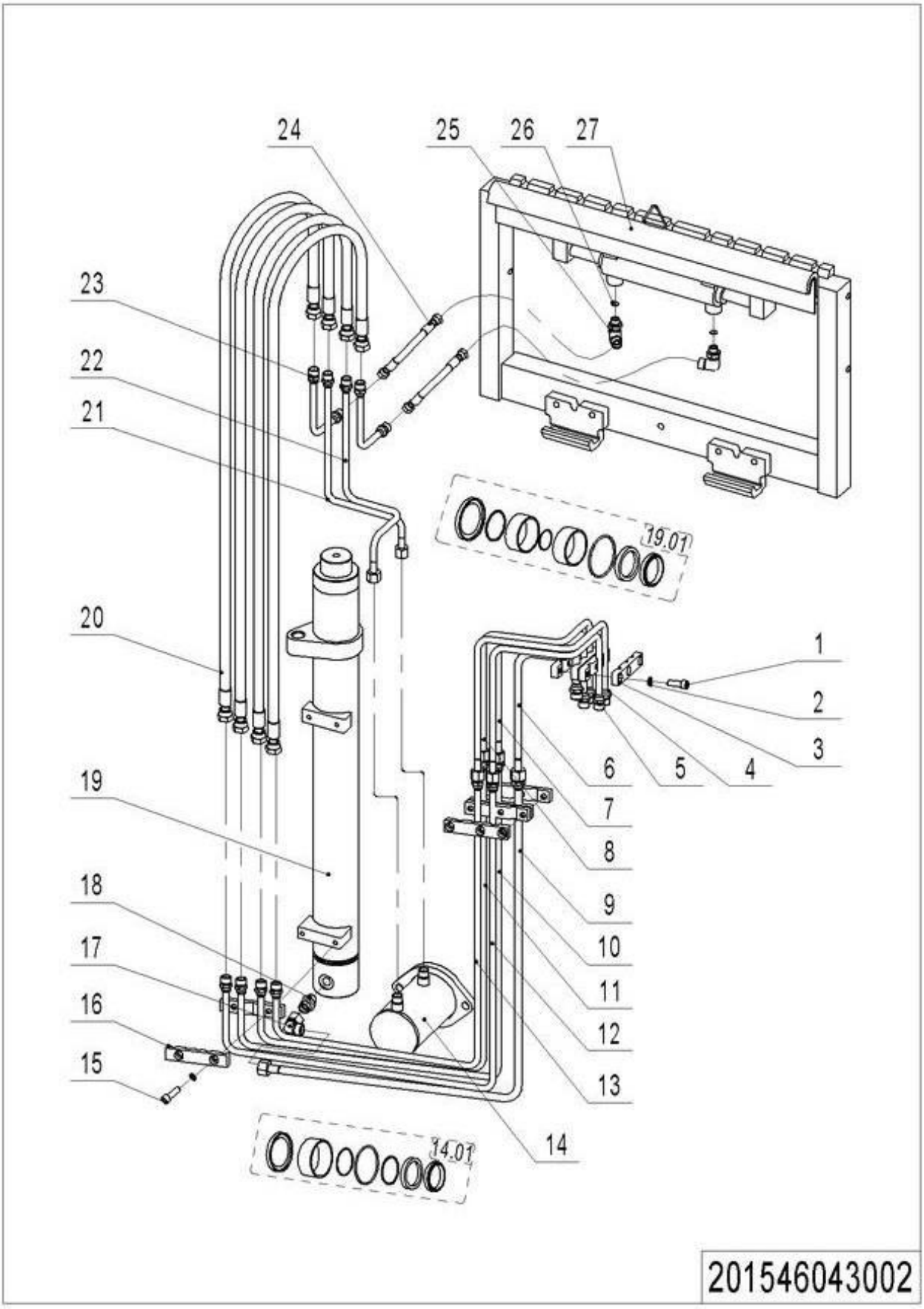

1= Supply as package. 2= Supply with constraints. 3= Phasing-out supply. 4= Supply as assembly. 5= Check other tables.

06 Single Mast Hydraulic Circuit 4 (201546043002)

No.	Item Code	Mark	Item Description	Qty.	Substitute	Note
1	910200200064	1	Screw	4		
2	910400500006	1	Spring Washer	6		
3	201044520022	1	Pipe Clip	4		
4	201527020003		Steel Tube	1		
5	201527020002		Steel Tube	1		
6	201043020009		Steel Tube	1		
7	201043020010		Steel Tube	1		
8	201043020011		Steel Tube	1		
9	201543020013		Steel Tube	1		
10	201543020014		Steel Tube	1		
11	201543020015		Steel Tube	1		
12	201527020000		Steel Tube	1		
13	201527020001		Steel Tube	1		
14	201520510000		Cylinder	1		
14.01	201598510004		Seal Kit	1		
15	910200200058	1	Screw	2		
16	201044520062	1	Pipe Clip	2		
17	950400200004		Joint	1		
18	951000600001		Explosion Proof Valve	1		
19	201544510013		Cylinder	1		4800/1600
19	201544510015		Cylinder	1		3600/1200
19	201544510016		Cylinder	1		1800
19.01	201598510002		Seal Kit	1		
20	201043020015		Hose	4		4800/1600
20	201044520092		Hose	4		3600/1200
20	201043020017		Hose	4		1800
21	201044520073		Steel Tube	1		
22	201044520074		Steel Tube	1		
23	201030520012		Steel Tube	2		
24	201030520013		Hose	2		

1= Supply as package. 2= Supply with constraints. 3= Phasing-out supply. 4= Supply as assembly. 5= Check other tables.

06 Single Mast Hydraulic Circuit 4 (201546043002) Continuation

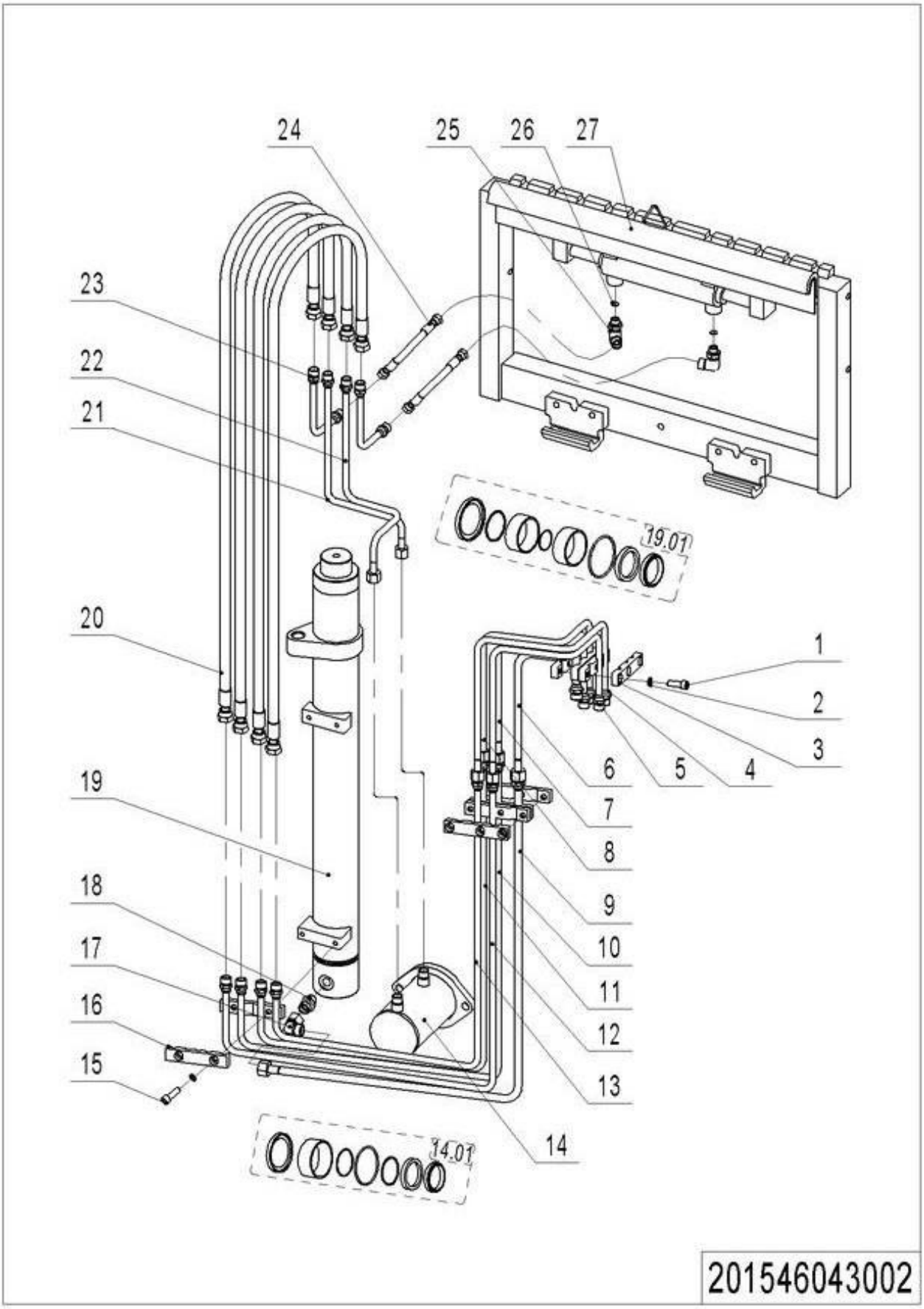

1= Supply as package. 2= Supply with constraints. 3= Phasing-out supply. 4= Supply as assembly. 5= Check other tables.

06 Single Mast Hydraulic Circuit 4 (201546043002) **Continuation**

No.	Item Code	Mark	Item Description	Qty.	Substitute	Note
25	950401100003		Joint	2		
26	201030520014	1	Damper	2		
27	940100200008		Side Shifter	1		

1= Supply as package. 2= Supply with constraints. 3= Phasing-out supply. 4= Supply as assembly. 5= Check other tables.

07 Double Mast Hydraulic Circuit 3 (201546044001)

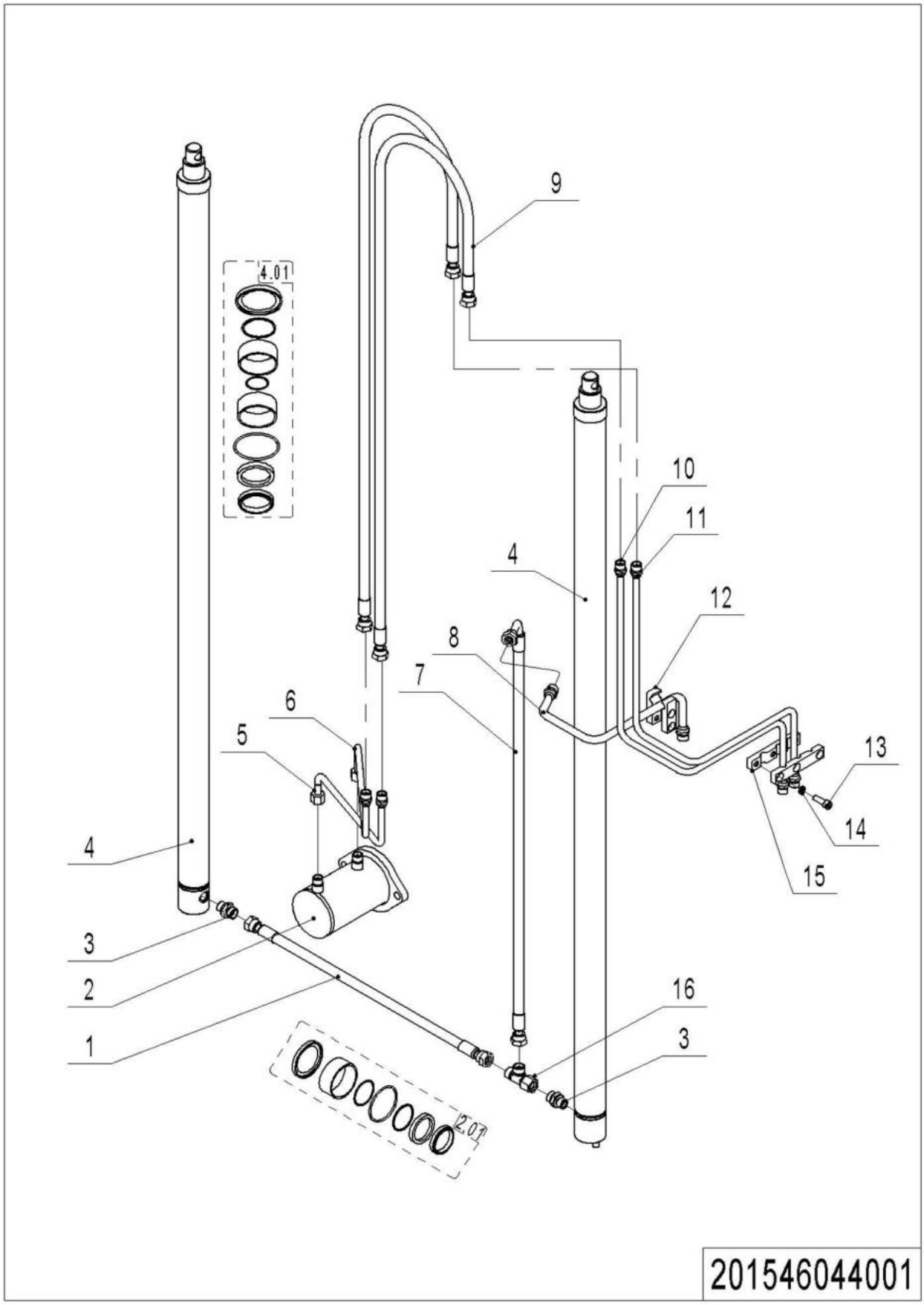

1= Supply as package. 2= Supply with constraints. 3= Phasing-out supply. 4= Supply as assembly. 5= Check other tables.

07 Double Mast Hydraulic Circuit 3 (201546044001)

No.	Item Code	Mark	Item Description	Qty.	Substitute	Note
1	201544020002		Hose	1		
2	201520510000		Cylinder	1		
2.01	201598510004		Seal Kit	1		
3	951000600001		Explosion Proof Valve	2		
4	201544510010		Cylinder	2		4800
4	201544510011		Cylinder	2		4500/3000
4	201544510012		Cylinder	2		3600/2400
4.01	201598510003		Seal Kit	1		
5	201544020001		Steel Tube	1		
6	201544020000		Steel Tube	1		
7	201044520087		Hose	1		
8	201044520070		Steel Tube	1		
9	201544520035		Hose	2		4800
9	201044520078		Hose	2		4500/3000
9	201044520092		Hose	2		3600/2400
10	201044520071		Steel Tube	1		
11	201044520072		Steel Tube	1		
12	201044520062	1	Pipe Clip	2		
13	910200200058	1	Screw	3		
14	910400500006	1	Spring Washer	3		
15	201044520022	1	Pipe Clip	2		
16	950401000001		Joint	1		

1= Supply as package. 2= Supply with constraints. 3= Phasing-out supply. 4= Supply as assembly. 5= Check other tables.

08 Double Mast Hydraulic Circuit 4 (201546044002)

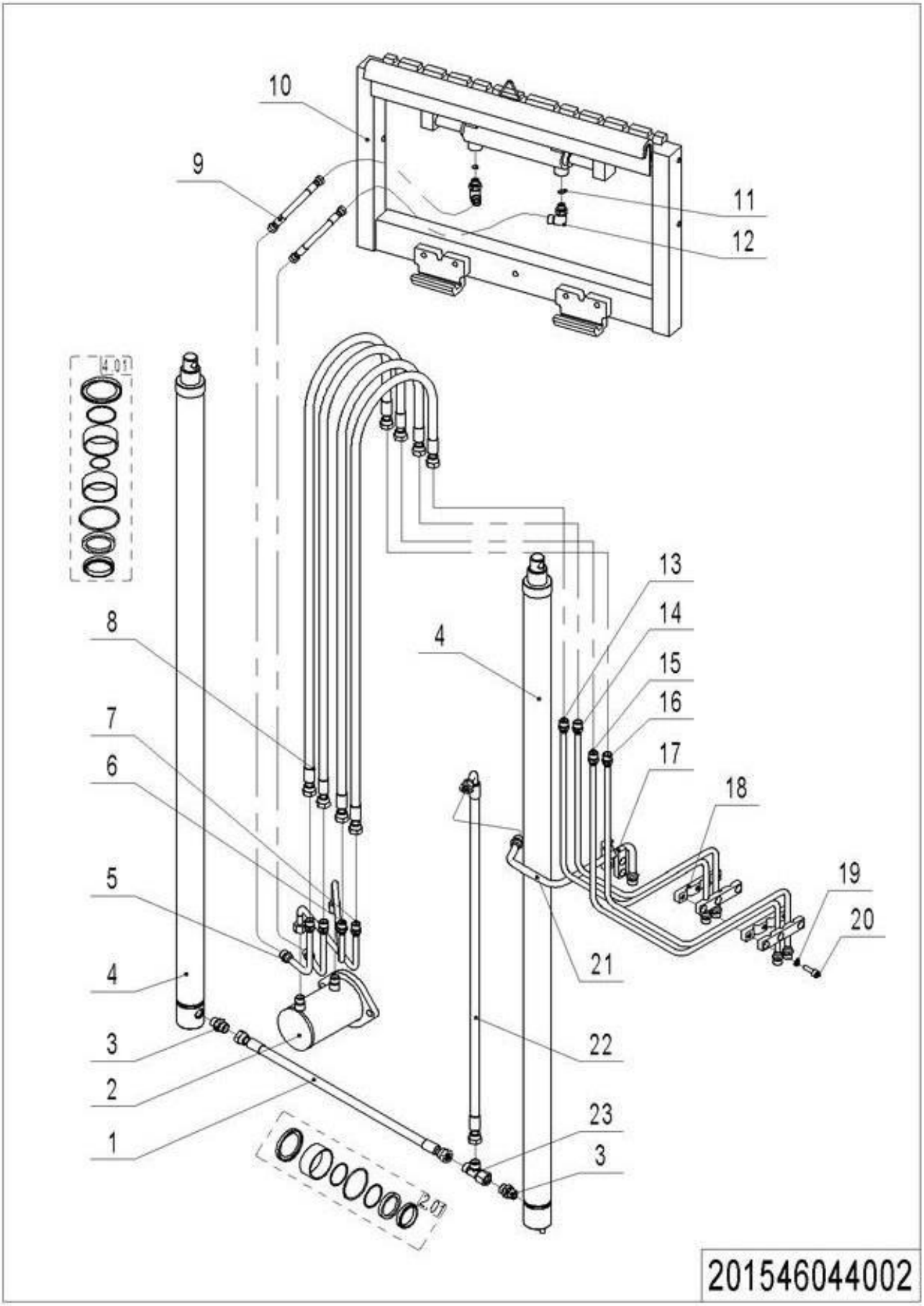

1= Supply as package. 2= Supply with constraints. 3= Phasing-out supply. 4= Supply as assembly. 5= Check other tables.

08 Double Mast Hydraulic Circuit 4 (201546044002)

No.	Item Code	Mark	Item Description	Qty.	Substitute	Note
1	201544020002		Hose	1		
2	201520510000		Cylinder	1		
2.01	201598510004		Seal Kit	1		
3	951000600001		Explosion Proof Valve	2		
4	201544510010		Cylinder	2		4800
4	201544510011		Cylinder	2		4500/3000
4	201544510012		Cylinder	2		3600/2400
4.01	201598510003		Seal Kit	1		
5	201027520000		Steel Tube	2		
6	201544020000		Steel Tube	1		
7	201544020001		Steel Tube	1		
8	201544520035		Hose	4		4800
8	201044520078		Hose	4		4500/3000
8	201044520092		Hose	4		3600/2400
9	201030520013		Hose	2		
10	940100200008		Side Shifter	1		
11	201030520014	1	Damper	2		
12	950401100003		Joint	2		
13	201044520071		Steel Tube	1		
14	201044520072		Steel Tube	1		
15	201030520000		Steel Tube	1		
16	201030520001		Steel Tube	1		
17	201044520062	1	Pipe Clip	2		
18	201044520022	1	Pipe Clip	2		
19	910400500006	1	Spring Washer	3		
20	910200200058	1	Screw	3		
21	201044520070		Steel Tube	1		
22	201044520087		Hose	1		
23	950401000001		Joint	1		

1= Supply as package. 2= Supply with constraints. 3= Phasing-out supply. 4= Supply as assembly. 5= Check other tables.

09 Triple Mast Hydraulic Circuit 3 (201546044501)

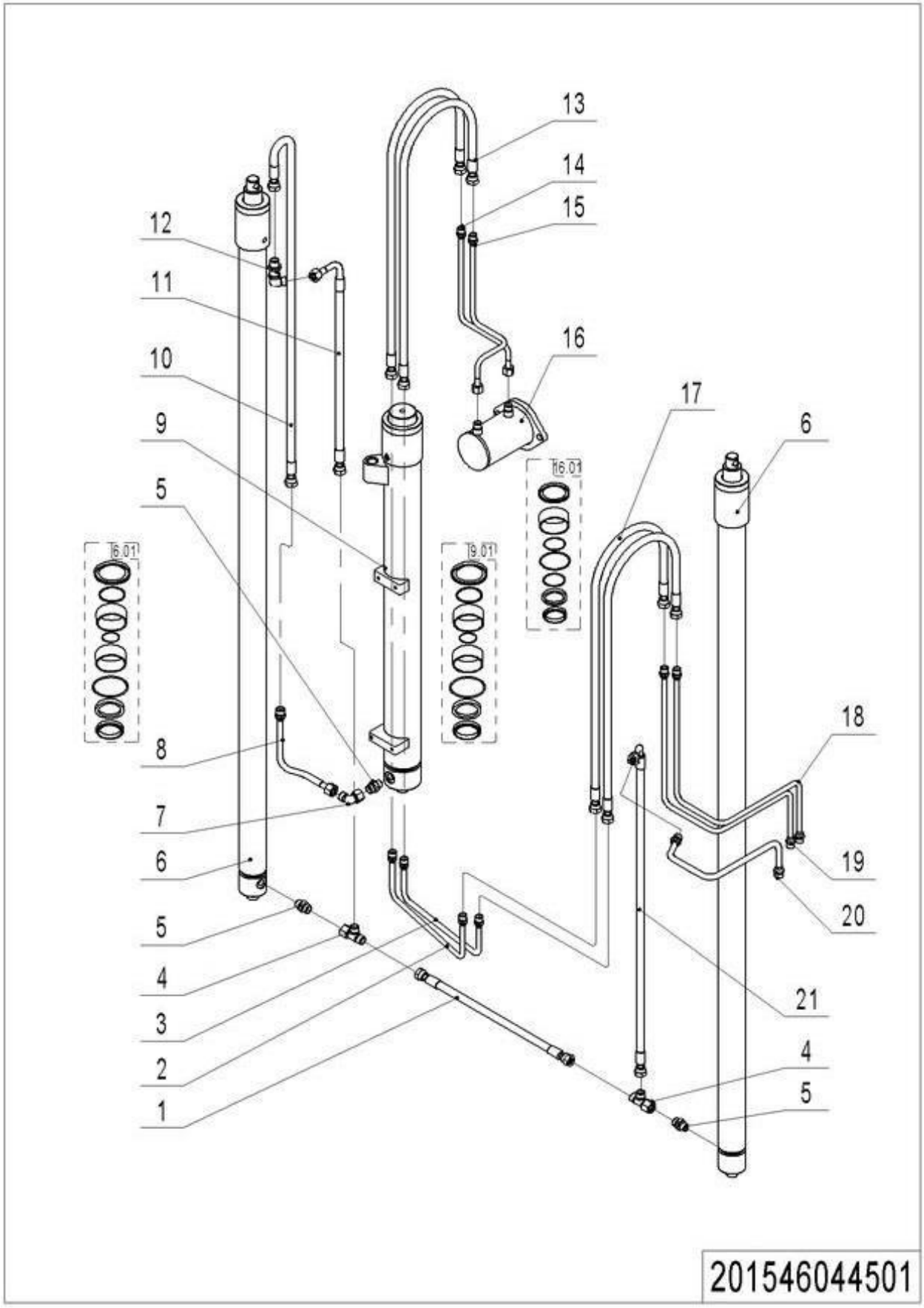

1= Supply as package. 2= Supply with constraints. 3= Phasing-out supply. 4= Supply as assembly. 5= Check other tables.

09 Triple Mast Hydraulic Circuit 3 (201546044501)

No.	Item Code	Mark	Item Description	Qty.	Substitute	Note
1	201544520034		Hose	1		
2	201544520032		Steel Tube	1		
3	201544520031		Steel Tube	1		
4	950401000001		Joint	2		
5	951000600001		Explosion Proof Valve	3		
6	201544510010		Cylinder	2		4800
6	201544510011		Cylinder	2		4500
6	201544510012		Cylinder	2		3600
6.01	201598510003		Seal Kit	1		
7	950400200004		Joint	1		
8	201544520033		Steel Tube	1		
9	201544510013		Cylinder	1		4800
9	201544510014		Cylinder	1		4500
9	201544510015		Cylinder	1		3600
9.01	201598510002		Seal Kit	1		
10	201544520036		Hose	1		4800
10	201044520082		Hose	1		4500
10	201044520083		Hose	1		3600
11	201544520037		Hose	1		4800
11	201044520084		Hose	1		4500
11	201044520085		Hose	1		3600
12	950400600003		Joint	1		
13	201043020015		Hose	2		4800
13	201044520080		Hose	2		4500
13	201044520092		Hose	2		3600
14	201044520073		Steel Tube	1		
15	201044520074		Steel Tube	1		
16	201520510000		Cylinder	1		
16.01	201598510004		Seal Kit	1		
17	201544520035		Hose	2		4800

1= Supply as package. 2= Supply with constraints. 3= Phasing-out supply. 4= Supply as assembly. 5= Check other tables.

09 Triple Mast Hydraulic Circuit 3 (201546044501) Continuation

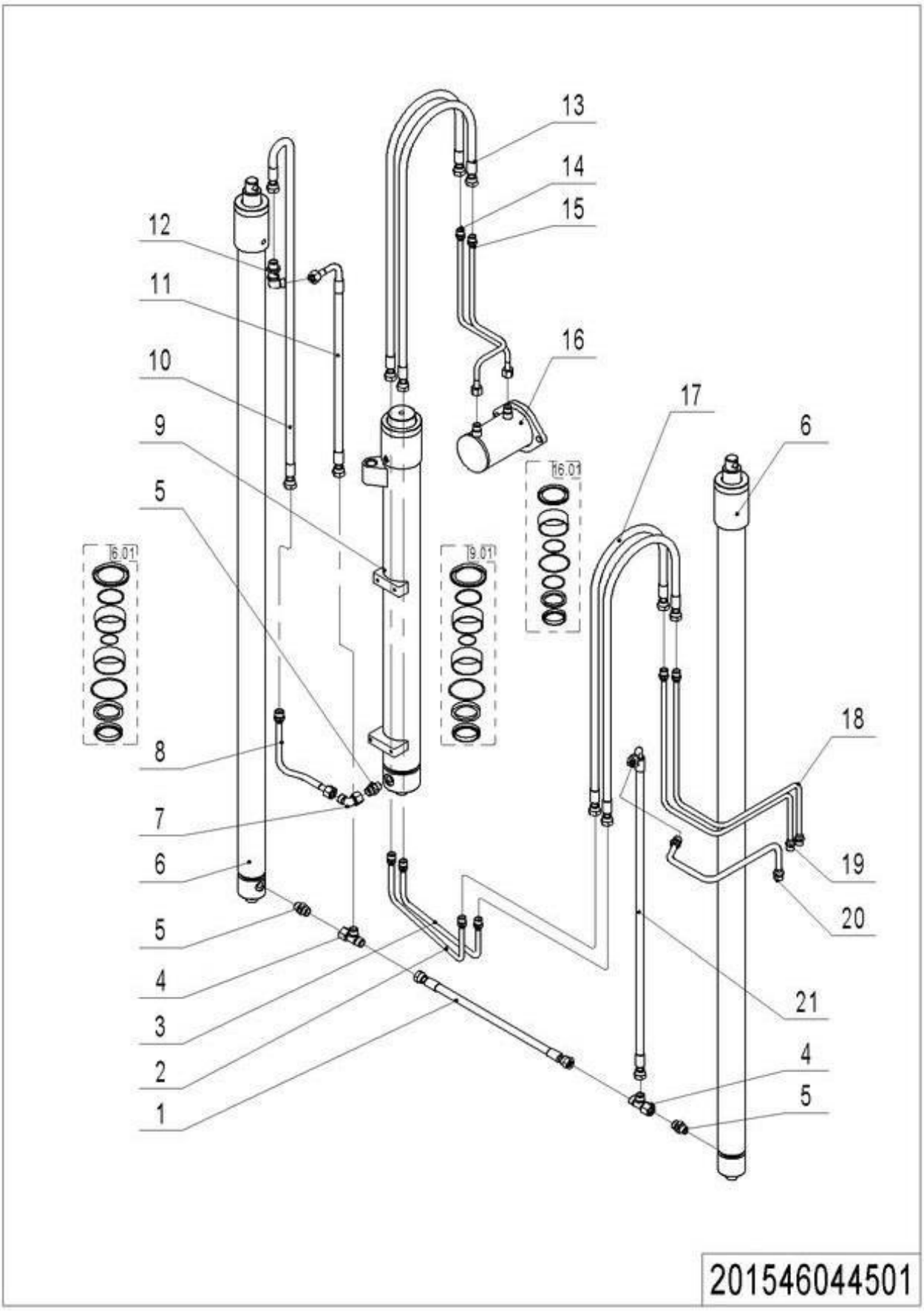

1= Supply as package. 2= Supply with constraints. 3= Phasing-out supply. 4= Supply as assembly. 5= Check other tables.

09 Triple Mast Hydraulic Circuit 3 (201546044501) Continuation

No.	Item Code	Mark	Item Description	Qty.	Substitute	Note
17	201044520078		Hose	2		4500
17	201044520092		Hose	2		3600
18	201044520072		Steel Tube	1		
19	201044520071		Steel Tube	1		
20	201044520070		Steel Tube	1		
21	201044520087		Hose	1		

10 Triple Mast Hydraulic Circuit 4 (201546044502)

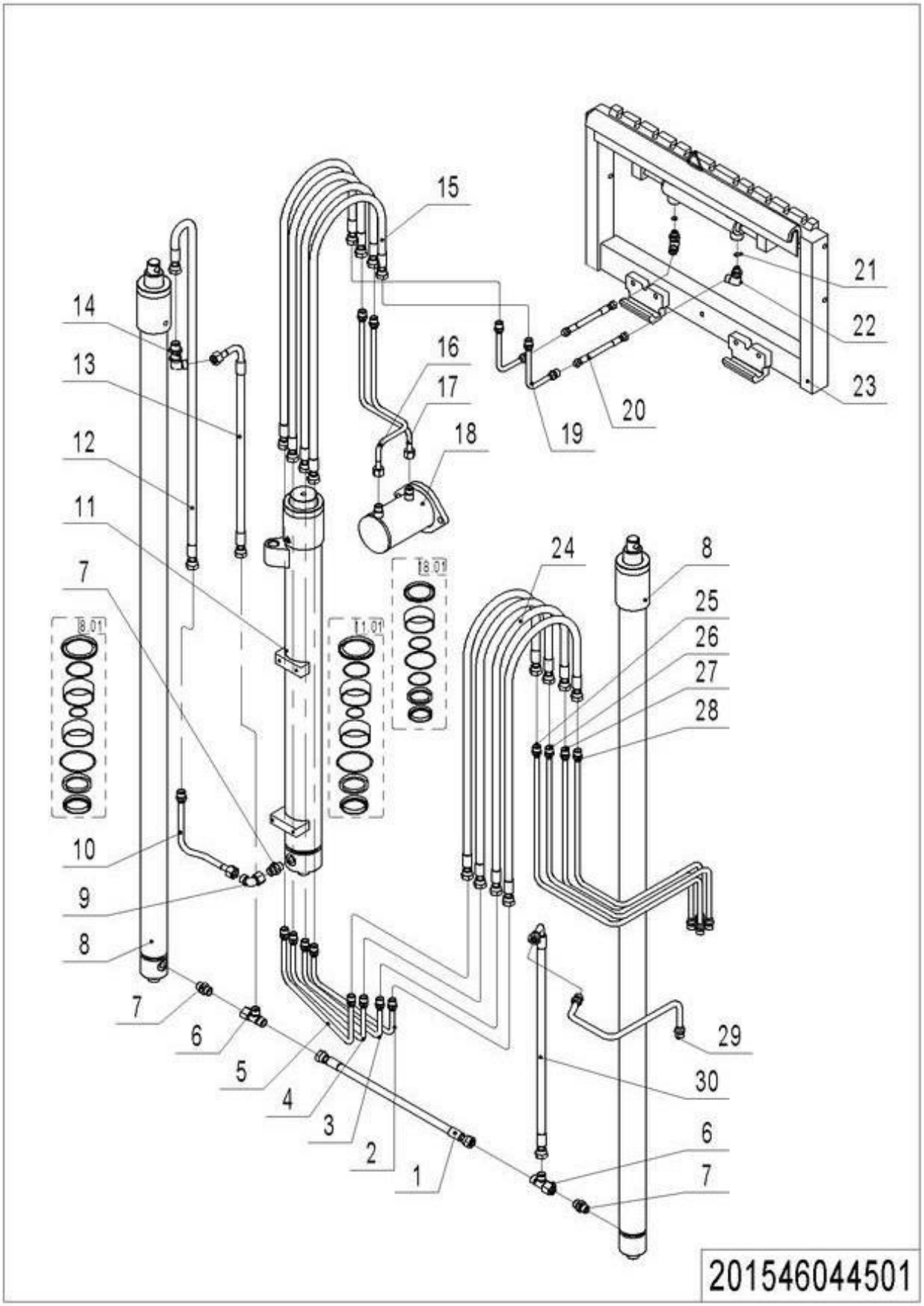

1= Supply as package. 2= Supply with constraints. 3= Phasing-out supply. 4= Supply as assembly. 5= Check other tables.

10 Triple Mast Hydraulic Circuit 4 (201546044502)

No.	Item Code	Mark	Item Description	Qty.	Substitute	Note
1	201544520034		Hose	1		
2	201530520003		Steel Tube	1		
3	201530520002		Steel Tube	1		
4	201530520001		Steel Tube	1		
5	201530520000		Steel Tube	1		
6	950401000001		Joint	2		
7	951000600001		Explosion Proof Valve	3		
8	201544510010		Cylinder	2		4800
8	201544510011		Cylinder	2		4500
8	201544510012		Cylinder	2		3600
8.01	201598510003		Seal Kit	1		
9	950400200004		Joint	1		
10	201544520033		Steel Tube	1		
11	201544510013		Cylinder	1		4800
11	201544510014		Cylinder	1		4500
11	201544510015		Cylinder	1		3600
11.01	201598510002		Seal Kit	1		
12	201544520036		Hose	1		4800
12	201044520082		Hose	1		4500
12	201044520083		Hose	1		3600
13	201544520037		Hose	1		4800
13	201044520084		Hose	1		4500
13	201044520085		Hose	1		3600
14	950400600003		Joint	1		
15	201043020015		Hose	4		4800
15	201044520080		Hose	4		4500
15	201044520092		Hose	4		3600
16	201044520073		Steel Tube	1		
17	201044520074		Steel Tube	1		
18	201520510000		Cylinder	1		

1= Supply as package. 2= Supply with constraints. 3= Phasing-out supply. 4= Supply as assembly. 5= Check other tables.

10 Triple Mast Hydraulic Circuit 4 (201546044502) Continuation

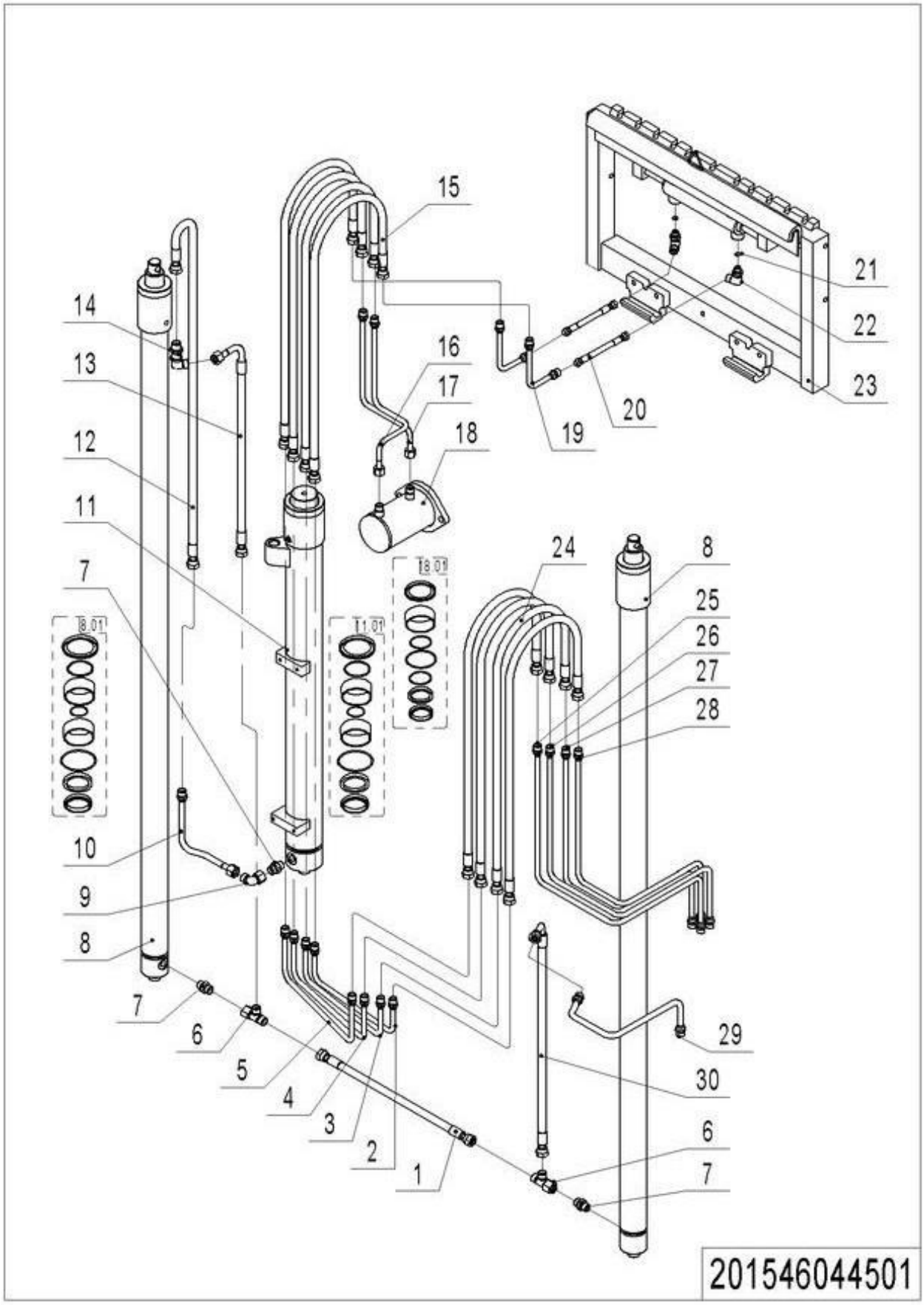

1= Supply as package. 2= Supply with constraints. 3= Phasing-out supply. 4= Supply as assembly. 5= Check other tables.

10 Triple Mast Hydraulic Circuit 4 (201546044502) Continuation

No.	Item Code	Mark	Item Description	Qty.	Substitute	Note
18.01	201598510004		Seal Kit	1		
19	201030520012		Steel Tube	2		
20	201030520013		Hose	2		
21	201030520014	1	Damper	2		
22	950401100003		Joint	2		
23	940100200008		Side Shifter	1		
24	201544520035		Hose	2		4800
24	201044520078		Hose	2		4500
24	201044520092		Hose	2		3600
25	201030520001		Steel Tube	1		
26	201030520000		Steel Tube	1		
27	201044520071		Steel Tube	1		
28	201044520072		Steel Tube	1		
29	201044520070		Steel Tube	1		
30	201044520087		Hose	1		

1= Supply as package. 2= Supply with constraints. 3= Phasing-out supply. 4= Supply as assembly. 5= Check other tables.

11 Oil Tank (201546019001)

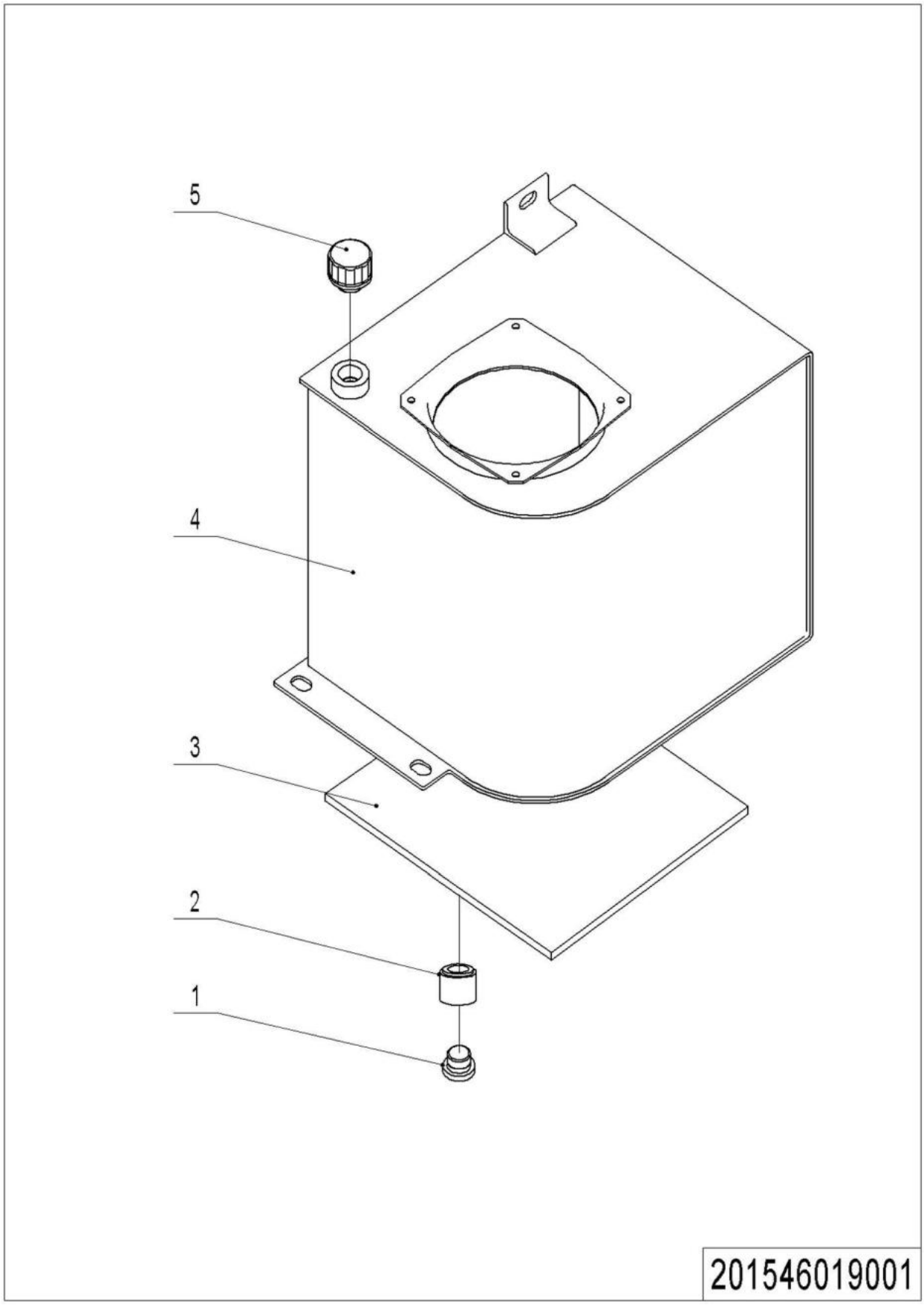

1= Supply as package. 2= Supply with constraints. 3= Phasing-out supply. 4= Supply as assembly. 5= Check other tables.

11 Oil Tank (201546019001)

No.	Item Code	Mark	Item Description	Qty.	Substitute	Note
1	911300100001	1	Screw Plug	1		
2	910800900005	1	Bonded Washer	1		
3	201019020004		Rubber Mat	1		
4	201019010000		Tank	1		
5	951100200001	1	Screw Plug	1		

1= Supply as package. 2= Supply with constraints. 3= Phasing-out supply. 4= Supply as assembly. 5= Check other tables.

12 Pump Unit (3.0Kw, 3.3cc) (532646023502)

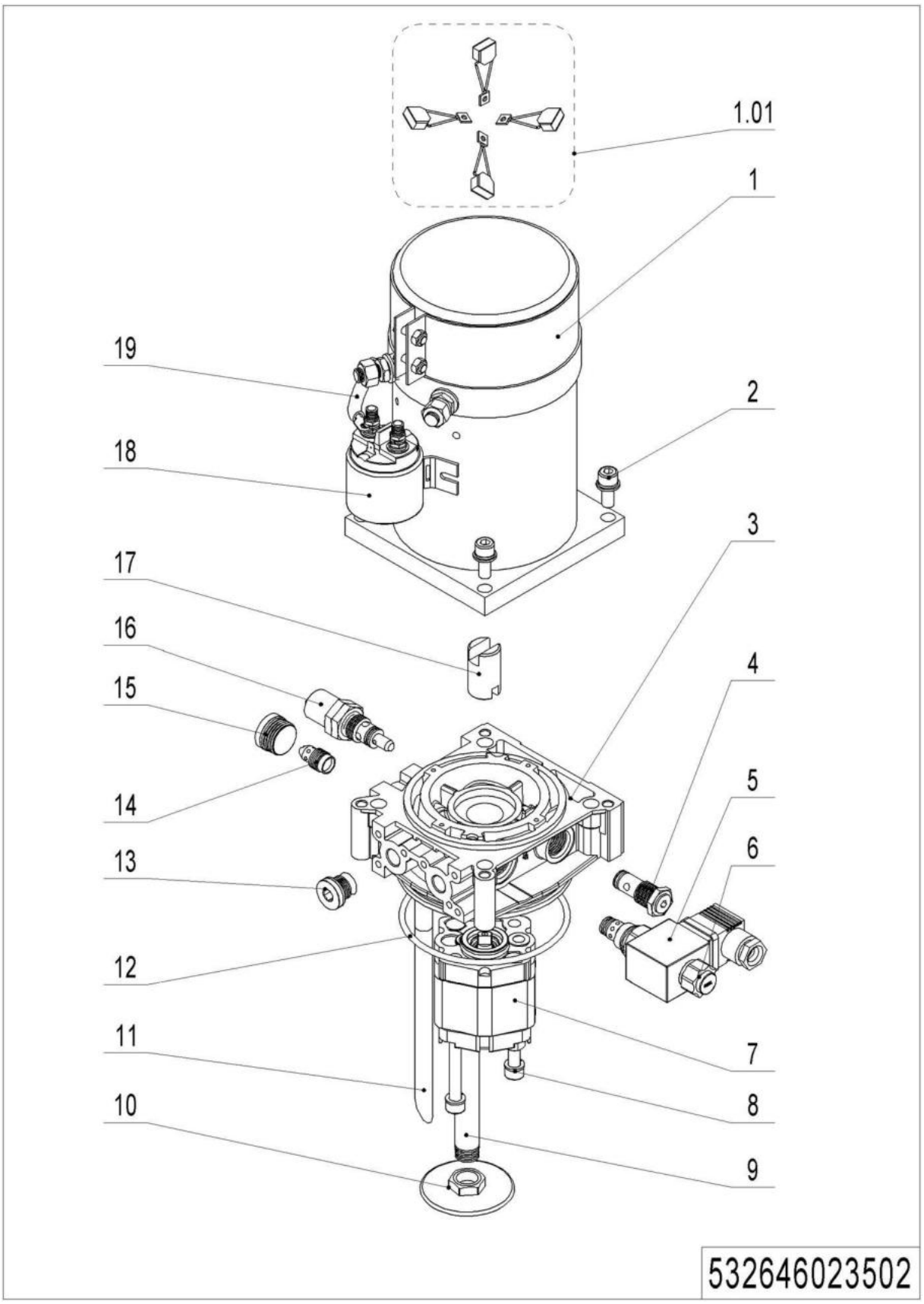

1= Supply as package. 2= Supply with constraints. 3= Phasing-out supply. 4= Supply as assembly. 5= Check other tables.

12 Pump Unit (3.0Kw, 3.3cc) (532646023502)

No.	Item Code	Mark	Item Description	Qty.	Substitute	Note
--	950900100064		Pump Unit	1		
1	532698510013		Motor	1		
1.01	532698510029		Carbon Brush	1		
2	532698520053		Screw	4		
3	532698520055		Valve Block	1		
4	532698510016		Check Valve	1		
5	532698510014		Coil	1		
6	532698510015		Magnetic Valve	1		
7	532698510022		Gear Pump	1		
8	532698520066		Screw	2		
9	532698520058		Oil Tube	1		
10	532698520059		Filter	1		
11	532698520060		Pipe	1		
12	532698520056		O-Ring	1		
13	532698520062		End Cap	1		
14	532698510023		Valve	1		
15	532698520061		End Cap	1		
16	532698510018		Overflow Valve	1		
17	532698520054		Coupling	1		
18	532698510020		Switch	1		
19	532698510021		Cables	1		

1= Supply as package. 2= Supply with constraints. 3= Phasing-out supply. 4= Supply as assembly. 5= Check other tables.

Chapter3：Truck Frame

01 Chassis (202046021501)

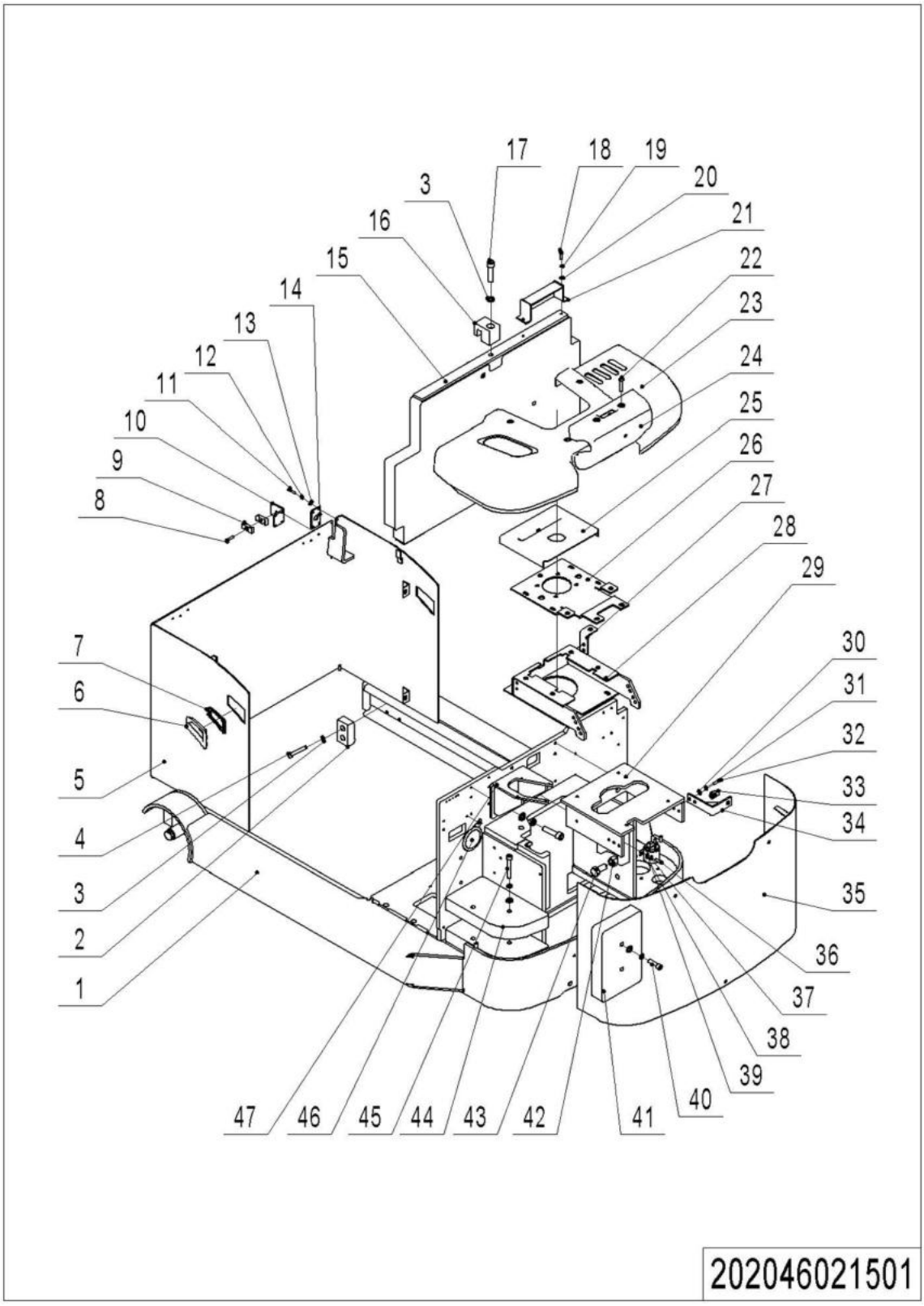

1= Supply as package. 2= Supply with constraints. 3= Phasing-out supply. 4= Supply as assembly. 5= Check other tables.

01 Chassis (202046021501)

No.	Item Code	Mark	Item Description	Qty.	Substitute	Note
1	202021510000		Chassis	1		
2	216521520001		Crash Pad	2		
3	910400500008	1	Spring Washer	12		
4	910200200098	1	Screw	8		
5	201521510001		Apron	1		
6	505621510003		Vent Kit	2		
7	505621510004		Vent Kit	2		
8	910200200058	1	Screw	13		
9	201044520027	1	Pipe Clip	2		
10	201021520039		Mounting Plate	2		
11	910200200032	1	Screw	8		
12	910400500005	1	Spring Washer	8		
13	910400100005	1	Flat Washer	8		
14	201021520035		Mounting Plate	1		
15	201021510008		Balance Weight	1		
16	201021520044		Stop Block	1		
17	910200200102	1	Screw	2		
18	910200200053	1	Screw	2		
19	910400500006	1	Spring Washer	8		
20	910400100006	1	Flat Washer	11		
21	201021510002		Protective Cover	1		
22	941100100006	1	Screw	10		
23	201021520036		Protective Cover	1		
24	505621520025		Protective Cover	1		
24	505621520043		Protective Cover	1		Without Guard Arm
25	206021520034		Protective Cover	1		
26	201021520027		Plate	1		
27	201021520026		Fixing Mount	2		
28	201021510003		Bracket	1		
29	201021510005		Bracket	1		
30	910400100007	1	Flat Washer	24		

1= Supply as package. 2= Supply with constraints. 3= Phasing-out supply. 4= Supply as assembly. 5= Check other tables.

01 Chassis (202046021501) Continuation

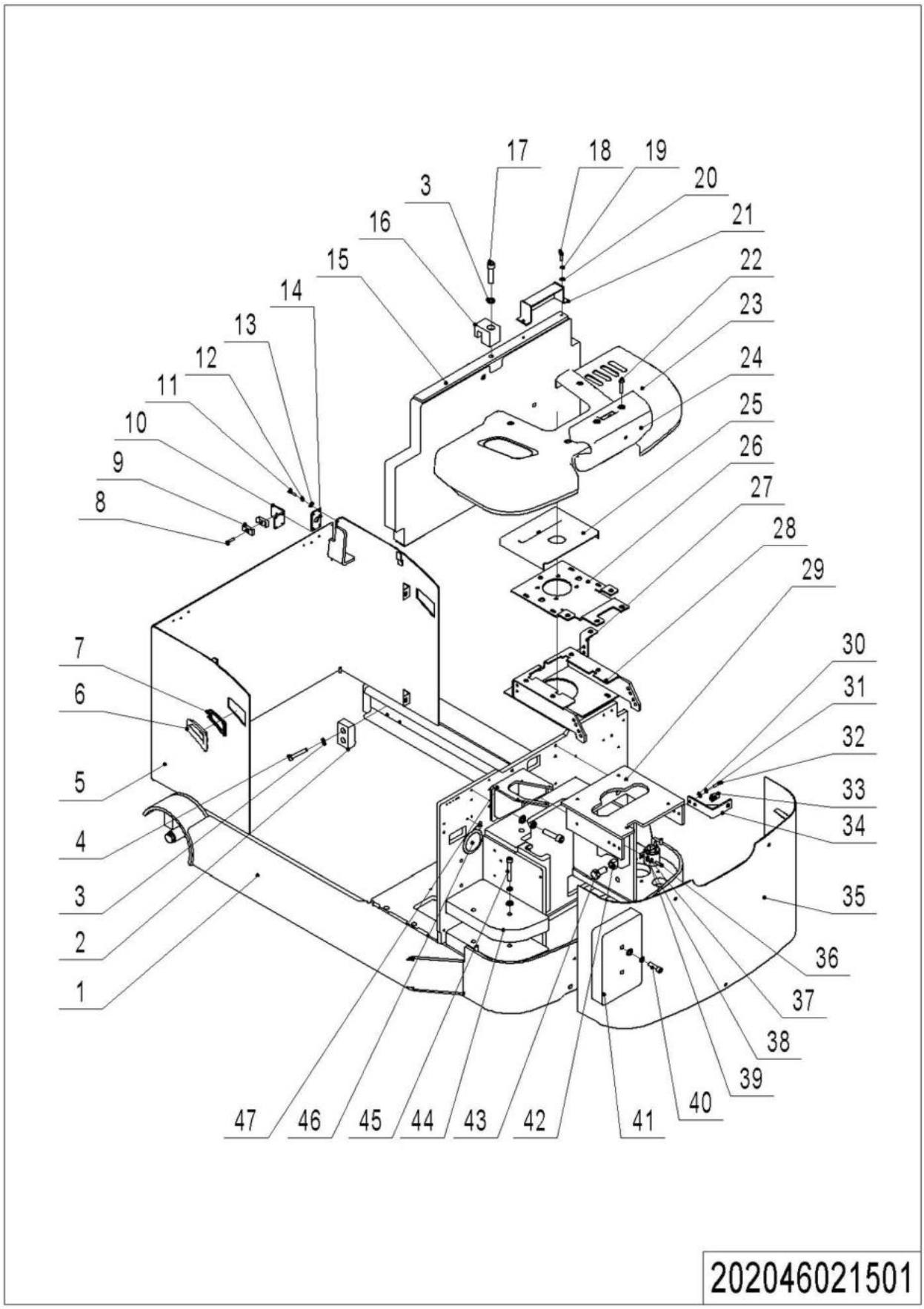

1= Supply as package. 2= Supply with constraints. 3= Phasing-out supply. 4= Supply as assembly. 5= Check other tables.

01 Chassis (202046021501) Continuation

No.	Item Code	Mark	Item Description	Qty.	Substitute	Note
31	910400500007	1	Spring Washer	24		
32	910200200075	1	Screw	16		
33	940400400003	1	Cage Nut	11		
34	201021510004		Fixing Mount	2		
35	201021510006		Apron	1		
36	532698510020		Switch	1		
37	910100300004		Bolt	2		
38	910400500004	1	Spring Washer	2		
39	910400100004	1	Flat Washer	2		
40	910100100052		Bolt	2		
41	202021520006		Balance Weight	1		
42	910300100012	1	Nut	3		
43	910100100118	1	Bolt	3		
44	201021520040		Balance Weight	2		
45	910100100061	1	Bolt	2		
46	920500100001		Horn	1		
47	201021510007		Bracket	1		

1= Supply as package. 2= Supply with constraints. 3= Phasing-out supply. 4= Supply as assembly. 5= Check other tables.

02 Chassis (Side Extraction Battery) (202046021502)

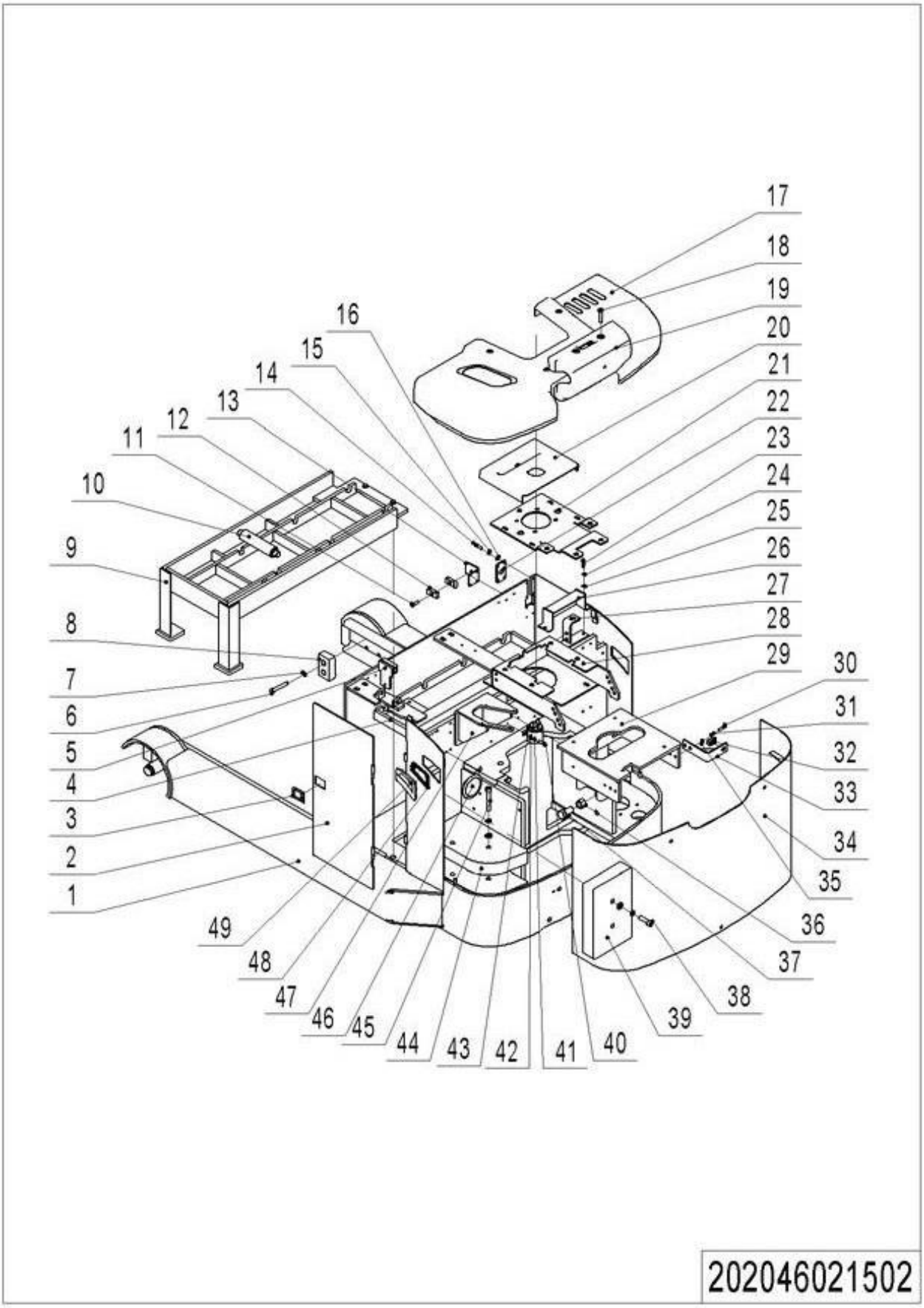

1= Supply as package. 2= Supply with constraints. 3= Phasing-out supply. 4= Supply as assembly. 5= Check other tables.

02 Chassis (Side Extraction Battery) (202046021502)

No.	Item Code	Mark	Item Description	Qty.	Substitute	Note
1	202021510011		Chassis	1		
2	203021510003		Door	1		
3	940800300002		Panel Lock	1		
4	203012510000		Battery Rack	1		
5	203021510002		Baffle	1		
6	910200200098	1	Screw	8		
7	910400500008	1	Spring Washer	10		
8	216521520001		Crash Pad	2		
9	203021510004		Bracket	1		
10	232021501002		Roller	8		
11	910200200058	1	Screw	10		
12	201044520027	1	Pipe Clip	2		
13	201021520039		Mounting Plate	1		
14	910200200032	1	Screw	8		
15	910400500005	1	Spring Washer	8		
16	910400100005	1	Flat Washer	8		
17	201021520036		Protective Cover	1		
18	941100100006	1	Screw	10		
19	505621520025		Protective Cover	1		
20	206021520034		Protective Cover	1		
21	201021520027		Plate	1		
22	201021520035		Mounting Plate	1		
23	910200200053	1	Screw	2		
24	910400500006	1	Spring Washer	10		
25	910400100006	1	Flat Washer	2		
26	201021510002		Protective Cover	1		
27	201021520026		Fixing Mount	2		
28	201021510003		Bracket	1		
29	201021510005		Bracket	1		
30	910200200075	1	Screw	16		

1= Supply as package. 2= Supply with constraints. 3= Phasing-out supply. 4= Supply as assembly. 5= Check other tables.

02 Chassis (Side Extraction Battery) (202046021502) Continuation

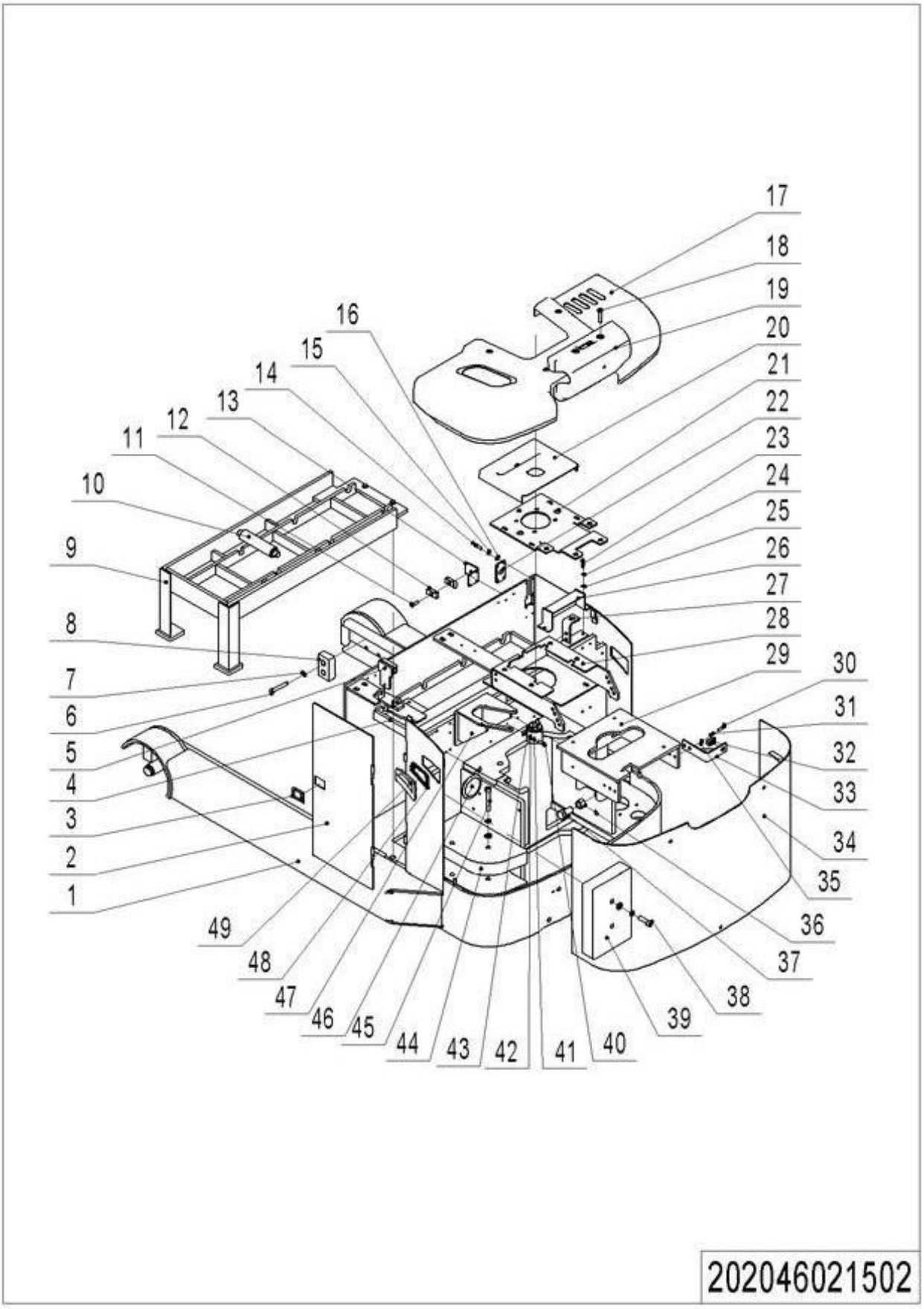

1= Supply as package. 2= Supply with constraints. 3= Phasing-out supply. 4= Supply as assembly. 5= Check other tables.

02 Chassis (Side Extraction Battery) (202046021502) Continuation

No.	Item Code	Mark	Item Description	Qty.	Substitute	Note
31	910400500007	1	Spring Washer	24		
32	940400400003	1	Cage Nut	11		
33	201021510004		Fixing Mount	2		
34	201021510006		Apron	1		
35	910400100007	1	Flat Washer	24		
36	910300100012	1	Nut	3		
37	910100100118	1	Bolt	3		
38	910100100052		Bolt	2		
39	202021520006		Balance Weight	1		
40	532698510020		Switch	1		
41	910100300004	1	Bolt	2		
42	910400500004	1	Spring Washer	2		
43	910400100004	1	Flat Washer	2		
44	201021520040		Balance Weight	2		
45	910100100061	1	Bolt	2		
46	920500100001		Horn	1		
47	201021510007		Bracket	1		
48	505621510004		Vent Kit	2		
49	505621510003		Vent Kit	2		

1= Supply as package. 2= Supply with constraints. 3= Phasing-out supply. 4= Supply as assembly. 5= Check other tables.

Chapter4: Mast

01 Outer Mast (Double/ Triple Mast) (201546044503)

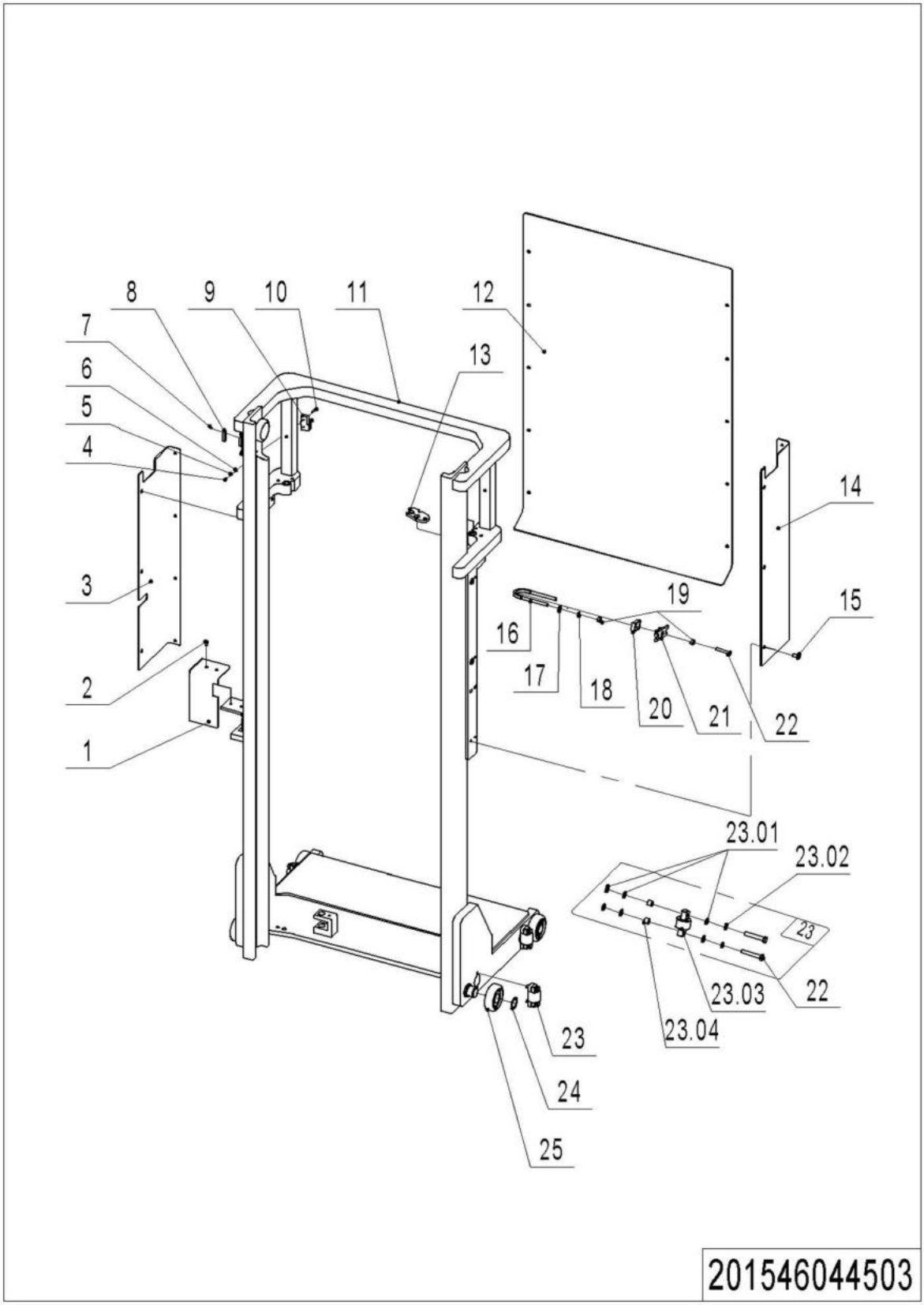

1= Supply as package. 2= Supply with constraints. 3= Phasing-out supply. 4= Supply as assembly. 5= Check other tables.

01 Outer Mast (Double/ Triple Mast) (201546044503)

No.	Item Code	Mark	Item Description	Qty.	Substitute	Note
1	201044520024		Protective Cover	1		
2	910200300023	1	Screw	2		
3	201544520001		Mounting Rack	1		4800
3	201044520020		Mounting Rack	1		4500
3	201044520021		Mounting Rack	1		3600
4	910300500001	1	Nut	2		
5	910400500003	1	Spring Washer	2		
6	910400100003	1	Flat Washer	2		
7	910200300003	1	Screw	4		
8	920200500001		Magnetic Switch	2		
9	920200300001		Microswitch	1		
10	910200500028	1	Screw	2		
11	201544510000		Outer Mast(4800)	1		4800
11	201544510001		Outer Mast(4500)	1		4500
11	201544510002		Outer Mast(3600)	1		3600
12	201544520002		Guard Plate	1		4800
12	201544520017		Guard Plate	1		4500
12	201544520018		Guard Plate	1		3600
13	201044520029		Mounting Plate	1		
14	201544520000		Mounting Rack	1		4800
14	201044520018		Mounting Rack	1		4500
14	201044520019		Mounting Rack	1		3600
15	940800700001	1	Rivet	10		
16	201044520017		Bolt	2		
17	910400100007	1	Flat Washer	12		
18	910400500007	1	Spring Washer	12		
19	910300100007	1	Nut	3		
20	255044020129		Protective Cover	2		
21	255044020130		Fixing Base	2		
22	910200200079	1	Screw	10		

1= Supply as package. 2= Supply with constraints. 3= Phasing-out supply. 4= Supply as assembly. 5= Check other tables.

01 Outer Mast (Double/ Triple Mast) (201546044503) Continuation

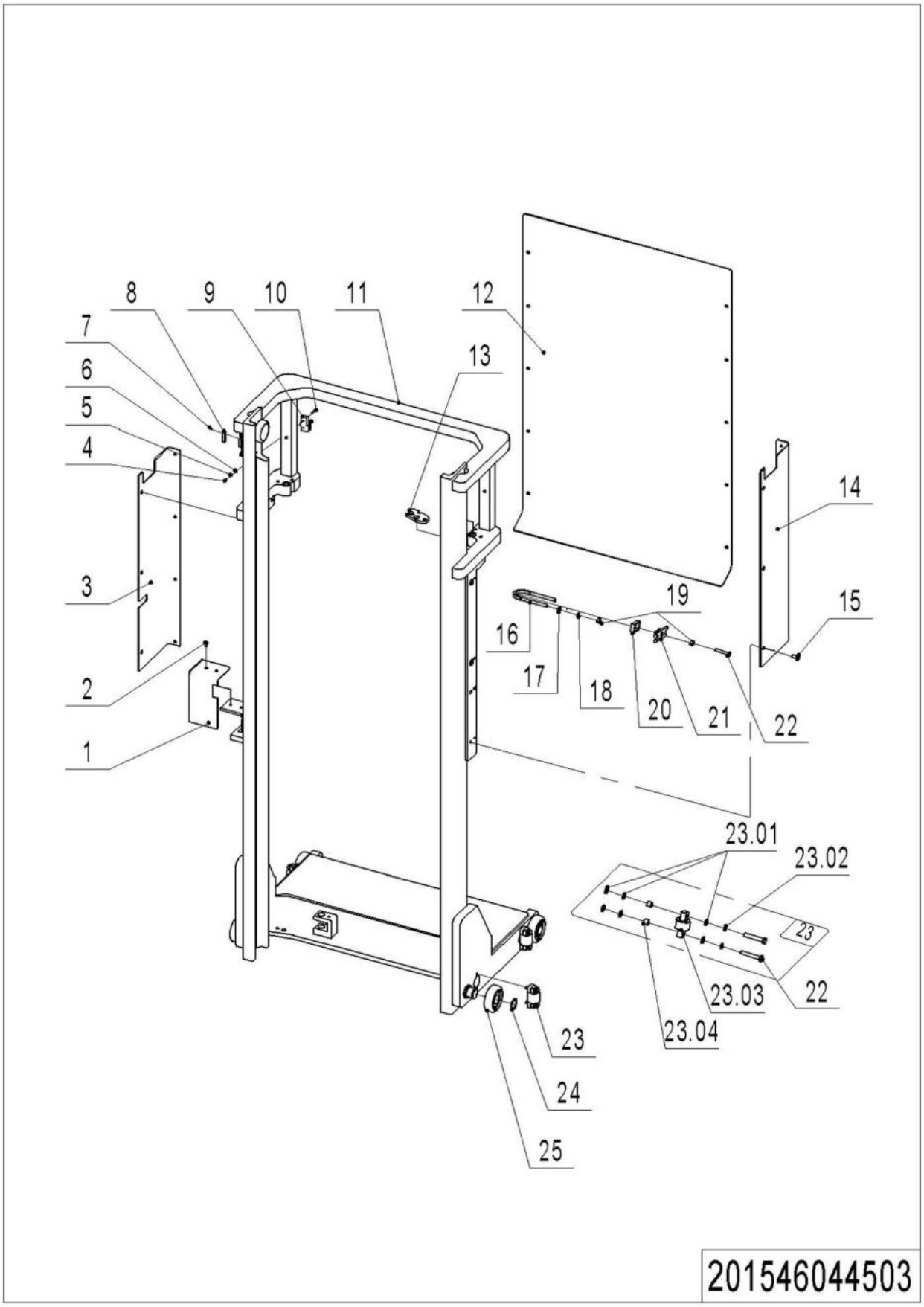

1= Supply as package. 2= Supply with constraints. 3= Phasing-out supply. 4= Supply as assembly. 5= Check other tables.

01 Outer Mast (Double/ Triple Mast) (201546044503) Continuation

No.	Item Code	Mark	Item Description	Qty.	Substitute	Note
23	213098510003		Roller	4		
23.01	910400100007	1	Flat Washer	6		
23.02	910400500007	1	Spring Washer	2		
23.03	940200200007		Side Roller	1		
23.04	940600500017	1	Washer	2		
24	910401300018	1	Circlip	4		
25	940200100006		Main Roller	4		

1= Supply as package. 2= Supply with constraints. 3= Phasing-out supply. 4= Supply as assembly. 5= Check other tables.

02 Middle Mast (Triple Mast) (201546044504)

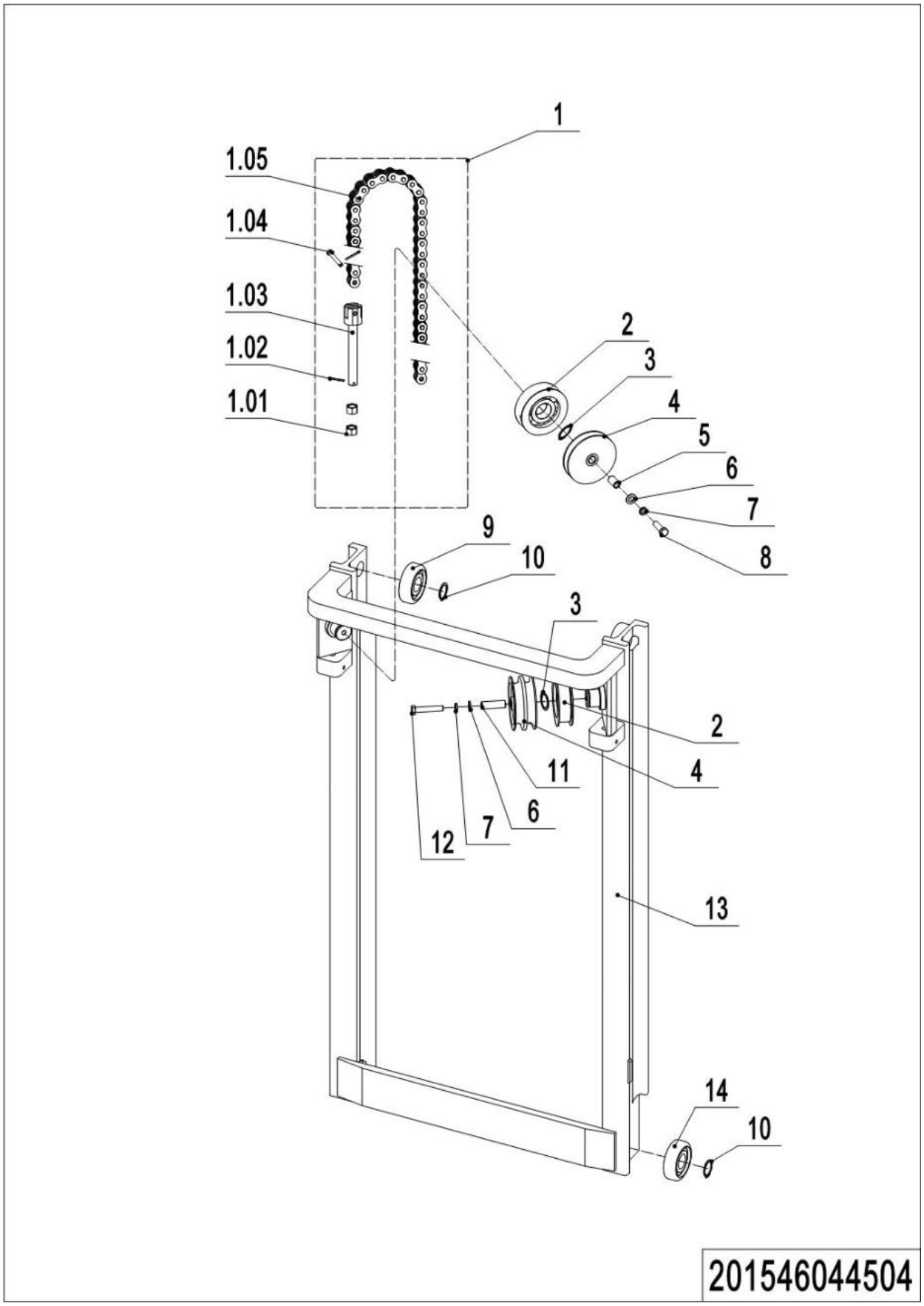

1= Supply as package. 2= Supply with constraints. 3= Phasing-out supply. 4= Supply as assembly. 5= Check other tables.

02 Middle Mast (Triple Mast) (201546044504)

No.	Item Code	Mark	Item Description	Qty.	Substitute	Note
1	201544510009		Chain	2		4800
1	201044510012		Chain	2		4500
1	201044510013		Chain	2		3600
1.01	910300200008	1	Nut	2		
1.02	910600600030	1	Cotter Pin	2		
1.03	532644020096		Chain Anchor	1		
1.04	910600700029	1	Pin	2		
1.05	201544510017		Chain	1		
1.05	201044510017		Chain	1		
1.05	201044510019		Chain	1		
2	940200500001		Sprocket Bearing	2		
3	910401300020		Circlip	2		
4	201044520040		Pulley	3		
5	201044520041	1	Sleeve	1		
6	910400100008	1	Flat Washer	2		
7	910400500008	1	Spring Washer	2		
8	910100300052	1	Bolt	1		
9	940200300004		Compound Roller	2		
10	910401300018		Circlip	4		
11	201044520039	1	Sleeve	1		
12	910100300057	1	Bolt	1		
13	201544510003		Middle Mast(4800)	1		4800
13	201544510004		Middle Mast(4500)	1		4500
13	201544510005		Middle Mast(3600)	1		3600
14	940200300007		Compound Roller	2		

1= Supply as package. 2= Supply with constraints. 3= Phasing-out supply. 4= Supply as assembly. 5= Check other tables.

03 Inner Mast (Triple Mast) (201546044505)

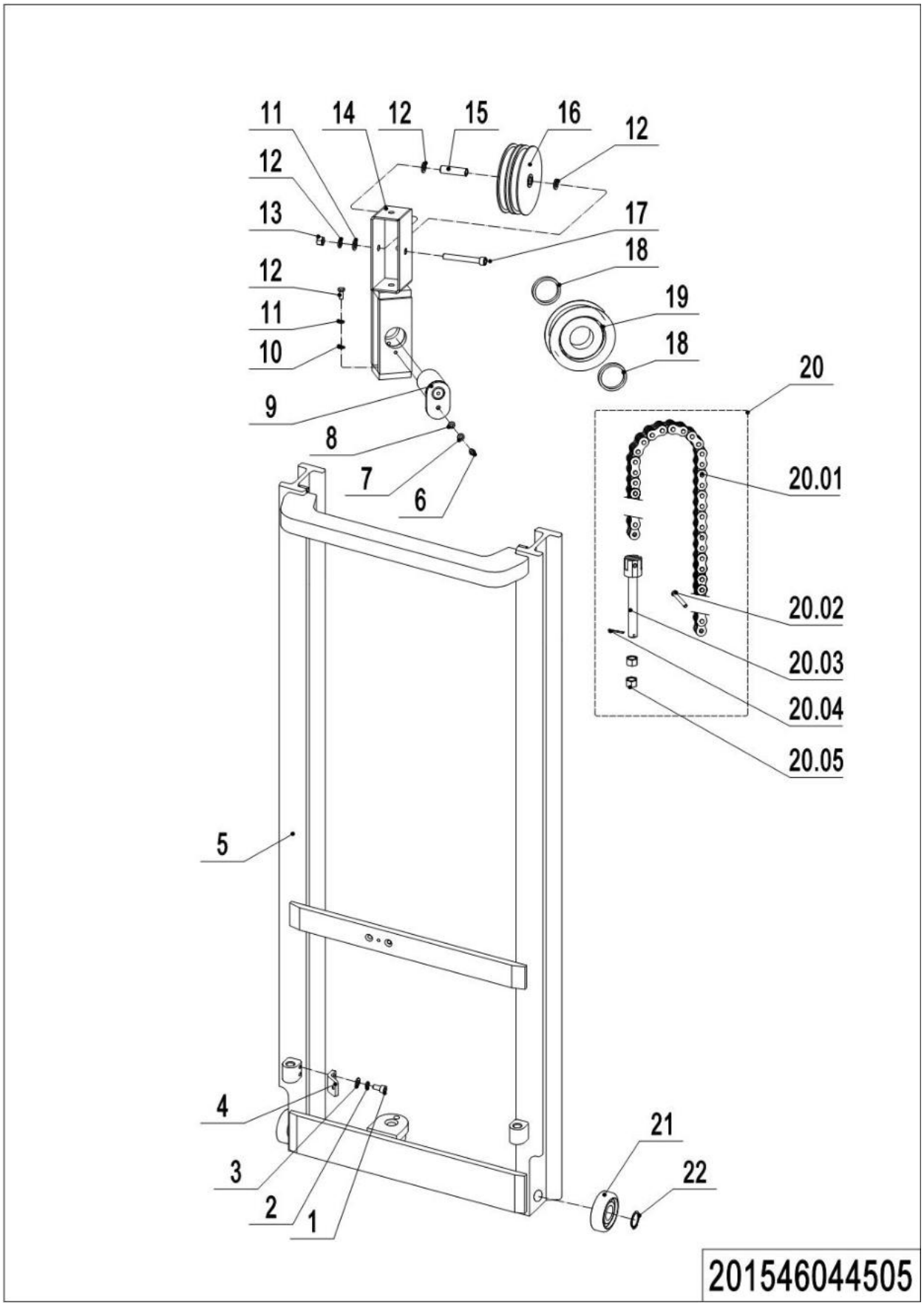

1= Supply as package. 2= Supply with constraints. 3= Phasing-out supply. 4= Supply as assembly. 5= Check other tables.

03 Inner Mast (Triple Mast) (201546044505)

No.	Item Code	Mark	Item Description	Qty.	Substitute	Note
1	910200200058	1	Screw	1		
2	910400500006	1	Spring Washer	1		
3	910400100006	1	Flat Washer	1		
4	201044520060		Mounting Plate	1		
5	201544510006		Inner Mast(4800)	1		4800
5	201544510007		Inner Mast(4500)	1		4500
5	201544510008		Inner Mast(3600)	1		3600
6	910200200058	1	Screw	1		
7	910400500006	1	Spring Washer	1		
8	910400100006	1	Flat Washer	1		
9	201044510000		Pin	1		
10	910400100008	1	Flat Washer	1		
11	910400500008	1	Spring Washer	4		
12	910200200098	1	Screw	1		
13	910300100008	1	Nut	1		
14	201044510001		Yoke	1		
15	201044520053		Sleeve	1		
16	201044520040		Pulley	2		
17	910100100056	1	Bolt	1		
18	201044520056		Spacer Bush	2		
19	940200500007		Sprocket Bearing	1		
20	201043010000		Chain	1		4800
20	201044510014		Chain	1		4500
20	201044510015		Chain	1		3600
20.01	201043010006		Chain	1		
20.01	201044510016		Chain	1		
20.01	201044510018		Chain	1		
20.02	910600700029	1	Pin	2		
20.03	532644020096		Chain Anchor	1		
20.04	910600600030	1	Cotter Pin	2		

1= Supply as package. 2= Supply with constraints. 3= Phasing-out supply. 4= Supply as assembly. 5= Check other tables.

03 Inner Mast (Triple Mast) (201546044505) Continuation

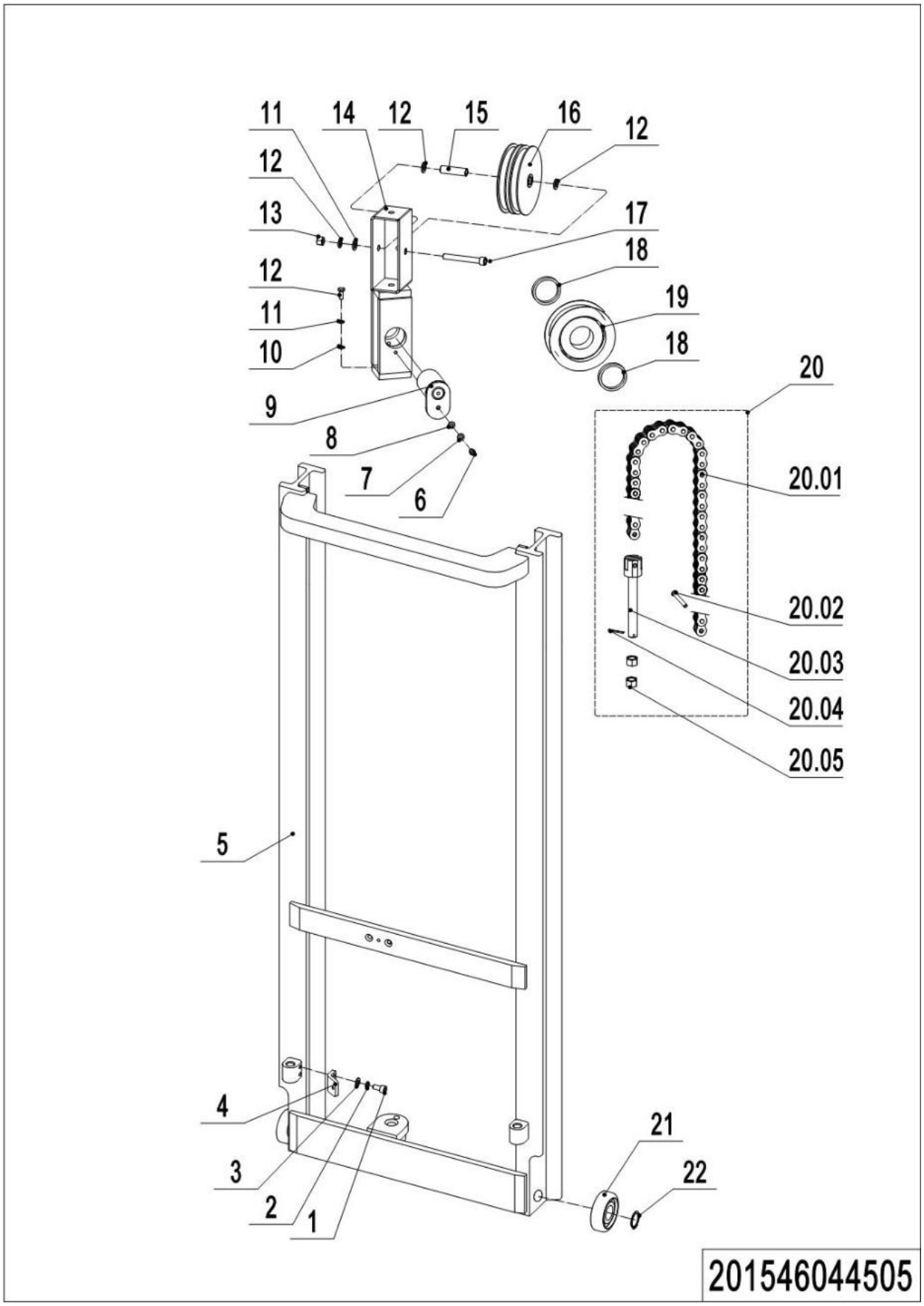

1= Supply as package. 2= Supply with constraints. 3= Phasing-out supply. 4= Supply as assembly. 5= Check other tables.

03 Inner Mast (Triple Mast) (201546044505) Continuation

No.	Item Code	Mark	Item Description	Qty.	Substitute	Note
20.05	910300200008	1	Nut	2		
21	940200300004		Compound Roller	2		
22	910401300018		Circlip	2		

04 Inner Mast (Double Mast) (201546044003)

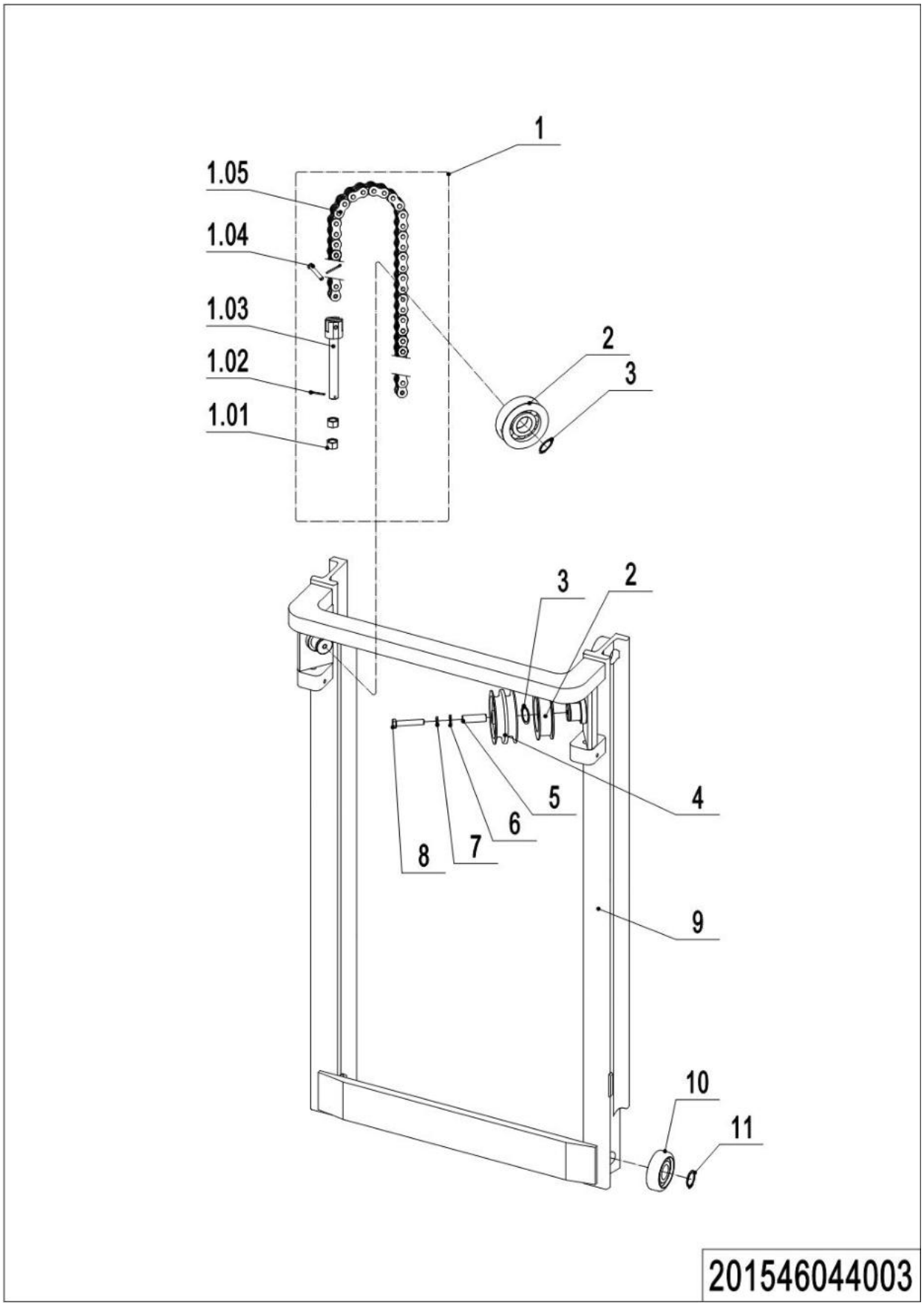

1= Supply as package. 2= Supply with constraints. 3= Phasing-out supply. 4= Supply as assembly. 5= Check other tables.

04 Inner Mast (Double Mast) (201546044003)

No.	Item Code	Mark	Item Description	Qty.	Substitute	Note
1	201044510012		Chain	2		3000
1	201044510013		Chain	2		2400
1.01	910300200008	1	Nut	2		
1.02	910600600030	1	Cotter Pin	2		
1.03	532644020096		Chain Anchor	1		
1.04	910600700029	1	Pin	2		
1.05	201544510017		Chain	1		
1.05	201044510017		Chain	1		
1.05	201044510019		Chain	1		
2	940200500001		Sprocket Bearing	2		
3	910401300020		Circlip	2		
4	201044520040		Pulley	3		
5	201044520039		Sleeve	1		
6	910400100008	1	Flat Washer	2		
7	910400500008	1	Spring Washer	2		
8	910100300057	1	Bolt	1		
9	201544010000		Inner Mast(3000)	1		3000
9	201544010001		Inner Mast(2400)	1		2400
10	940200300007		Compound Roller	2		
11	910401300018		Circlip	2		

1= Supply as package. 2= Supply with constraints. 3= Phasing-out supply. 4= Supply as assembly. 5= Check other tables.

05 Single Mast (201546043003)

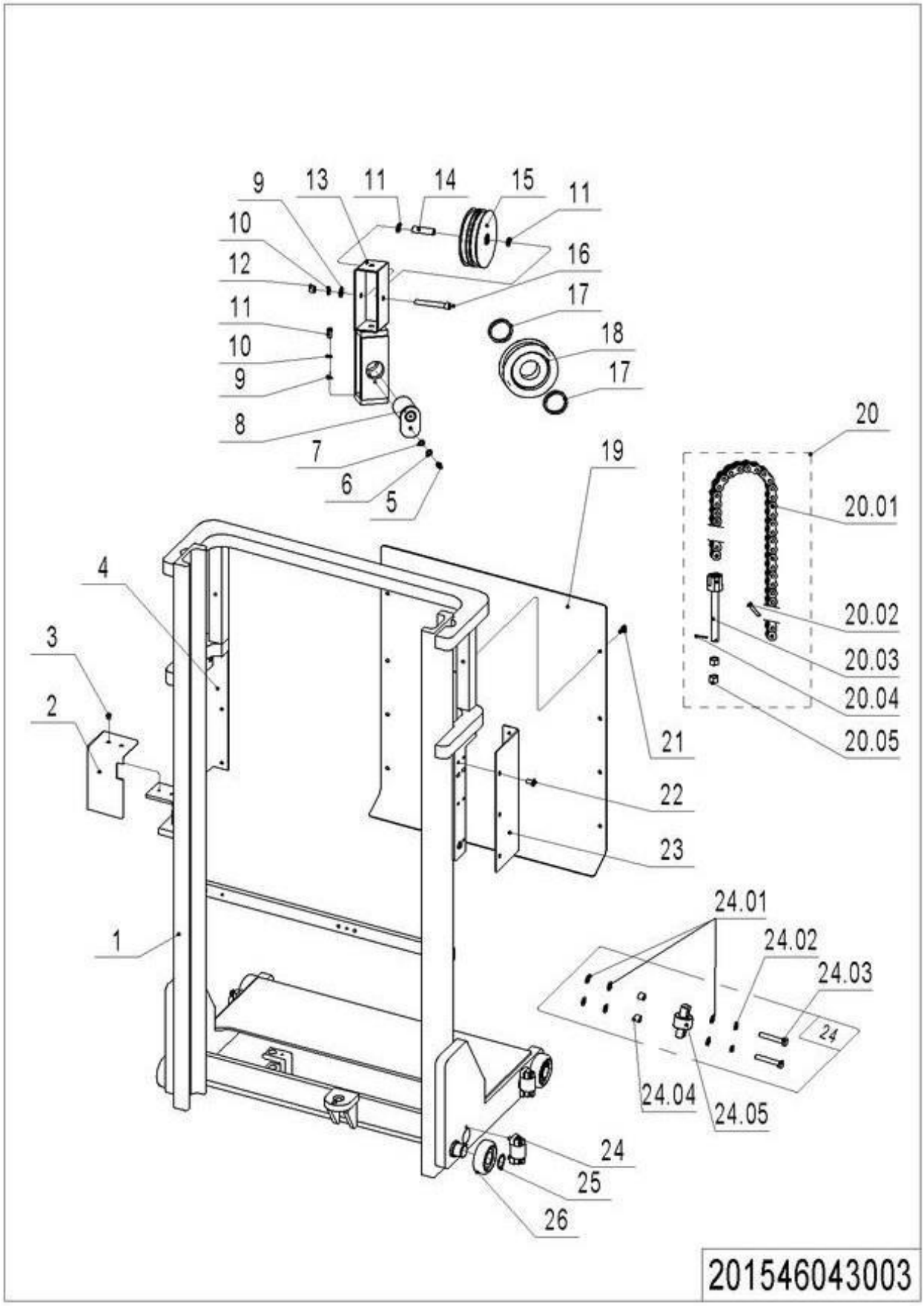

1= Supply as package. 2= Supply with constraints. 3= Phasing-out supply. 4= Supply as assembly. 5= Check other tables.

05 Single Mast (201546043003)

No.	Item Code	Mark	Item Description	Qty.	Substitute	Note
1	201543010000		Mast(1200)	1		1200
1	201543010001		Mast(1600)	1		1600
1	201543010002		Mast(1800)	1		1800
2	201044520024		Protective Cover	1		
3	910200300023	1	Screw	2		
4	201543020010		Mounting Rack	1		1200
4	201543020011		Mounting Rack	1		1600
4	201543020012		Mounting Rack	1		1800
5	910200200058	1	Screw	8		
6	910400500006	1	Spring Washer	8		
7	910400100006	1	Flat Washer	1		
8	201044510000		Pin	1		
9	910400100006	1	Flat Washer	2		
10	910400500006	1	Spring Washer	23		
11	910100300050	1	Bolt	1		
12	910300100008	1	Nut	1		
13	201044510001		Yoke	1		
14	201044520053		Sleeve	1		
15	213044520165		Pulley	2		
16	910100100056	1	Bolt	1		
17	201044520056		Spacer Bush	2		
18	940200500007		Sprocket Bearing	1		
19	201544520018		Guard Plate	1		1200
19	201544520002		Guard Plate	1		1600
19	201543020016		Guard Plate	1		1800
20	201044510015		Chain	1		1200
20	201043010000		Chain	1		1600
20	201043010003		Chain	1		1800
20.01	201044510018		Chain	1		1200
20.01	201043010000		Chain	1		1600

1= Supply as package. 2= Supply with constraints. 3= Phasing-out supply. 4= Supply as assembly. 5= Check other tables.

05 Single Mast (201546043003) Continuation

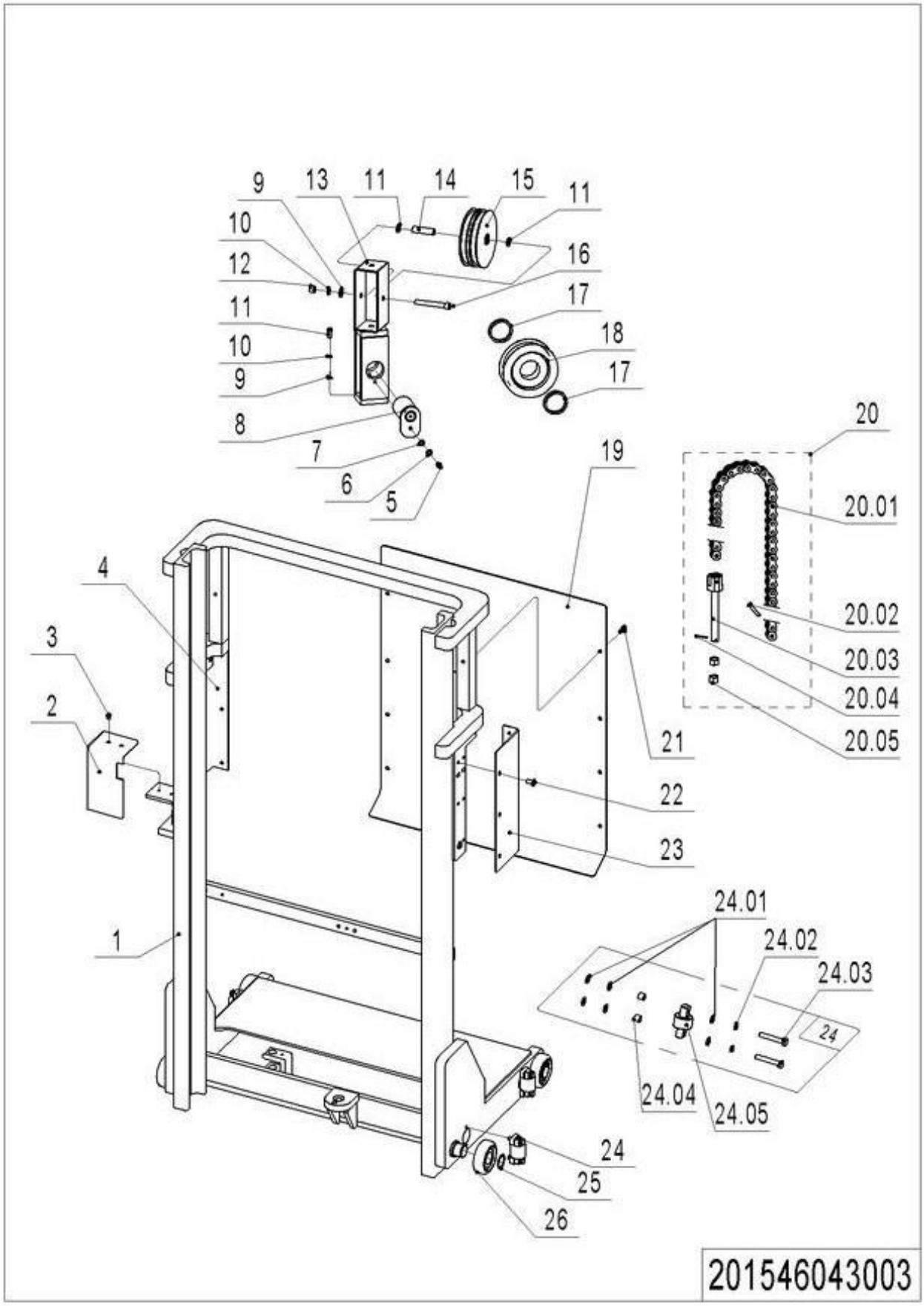

1= Supply as package. 2= Supply with constraints. 3= Phasing-out supply. 4= Supply as assembly. 5= Check other tables.

05 Single Mast (201546043003) Continuation

No.	Item Code	Mark	Item Description	Qty.	Substitute	Note
20.01	201043010003		Chain	1		1800
20.02	910600700029	1	Pin	2		
20.03	532644020096		Chain Anchor	1		
20.04	910600600030	1	Cotter Pin	2		
20.05	910300200008	1	Nut	2		
21	940800700001	1	Rivet	10		
22	910200300028	1	Screw	6		
23	201543020007		Mounting Rack	1		1200
23	201543020008		Mounting Rack	1		1600
23	201543020009		Mounting Rack	1		1800
24	213098510003		Roller	4		
24.01	910400100007	1	Flat Washer	6		
24.02	910400500007	1	Spring Washer	2		
24.03	910200200079	1	Screw	8		
24.04	940600500017	1	Washer	2		
24.05	940200200007		Side Roller	1		
25	910401300018	1	Circlip	4		
26	940200100006		Main Roller	4		

1= Supply as package. 2= Supply with constraints. 3= Phasing-out supply. 4= Supply as assembly. 5= Check other tables.

06 Fork Carriage (Single Mast) (201546038001)

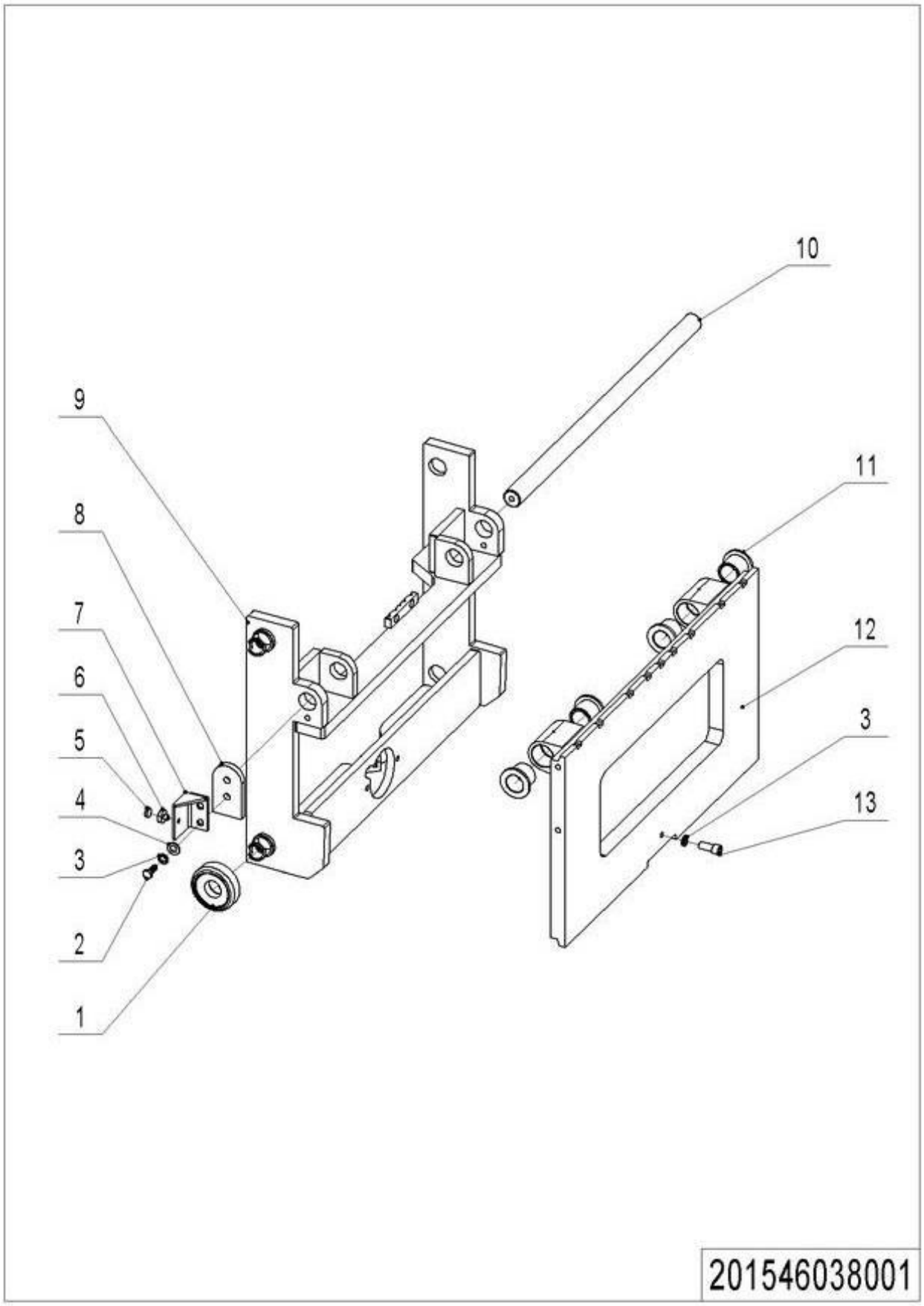

1= Supply as package. 2= Supply with constraints. 3= Phasing-out supply. 4= Supply as assembly. 5= Check other tables.

06 Fork Carriage (Single Mast) (201546038001)

No.	Item Code	Mark	Item Description	Qty.	Substitute	Note
1	940200300004		Compound Roller	4		
2	910100300050	1	Bolt	4		
3	910400500008	1	Spring Washer	5		
4	910400100008	1	Flat Washer	4		
5	940600100001		Magnetic Steel	1		
6	940600200001		Mounting Base	1		
7	201538020021		Fixing Plate	1		
8	201038020010		Baffle	2		
9	201538010004		Carriage	1		
10	201538020020		Axle	1		
11	940500400002		Bearing	4		
12	201538010005		Fork	1		
13	910200200098	1	Screw	1		

1= Supply as package. 2= Supply with constraints. 3= Phasing-out supply. 4= Supply as assembly. 5= Check other tables.

07 Fork Carriage (Double Mast) (201546038002)

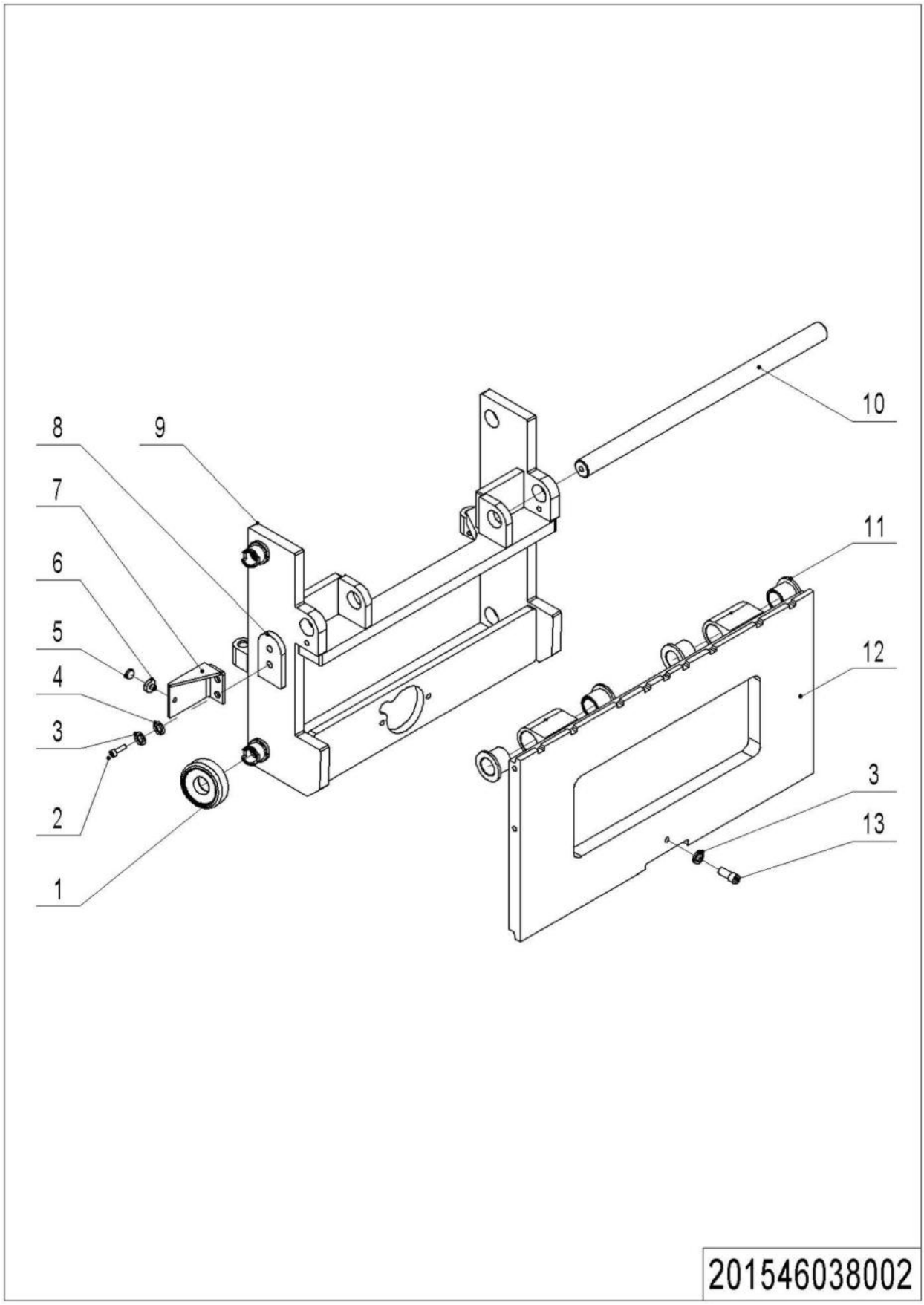

1= Supply as package. 2= Supply with constraints. 3= Phasing-out supply. 4= Supply as assembly. 5= Check other tables.

07 Fork Carriage (Double Mast) (201546038002)

No.	Item Code	Mark	Item Description	Qty.	Substitute	Note
1	940200300004		Compound Roller	4		
2	910100300050	1	Bolt	4		
3	910400500008	1	Spring Washer	5		
4	910400100008	1	Flat Washer	4		
5	940600100001		Magnetic Steel	1		
6	940600200001		Mounting Base	1		
7	201538020010		Fixing Plate	1		
8	201038020010		Baffle	2		
9	201538010002		Carriage	1		
10	201038020030		Axle	1		
11	940500400002		Bearing	4		
12	201538010003		Fork	1		
13	910200200098	1	Screw	1		

1= Supply as package. 2= Supply with constraints. 3= Phasing-out supply. 4= Supply as assembly. 5= Check other tables.

08 Fork Carriage (Triple Mast) (201546038003)

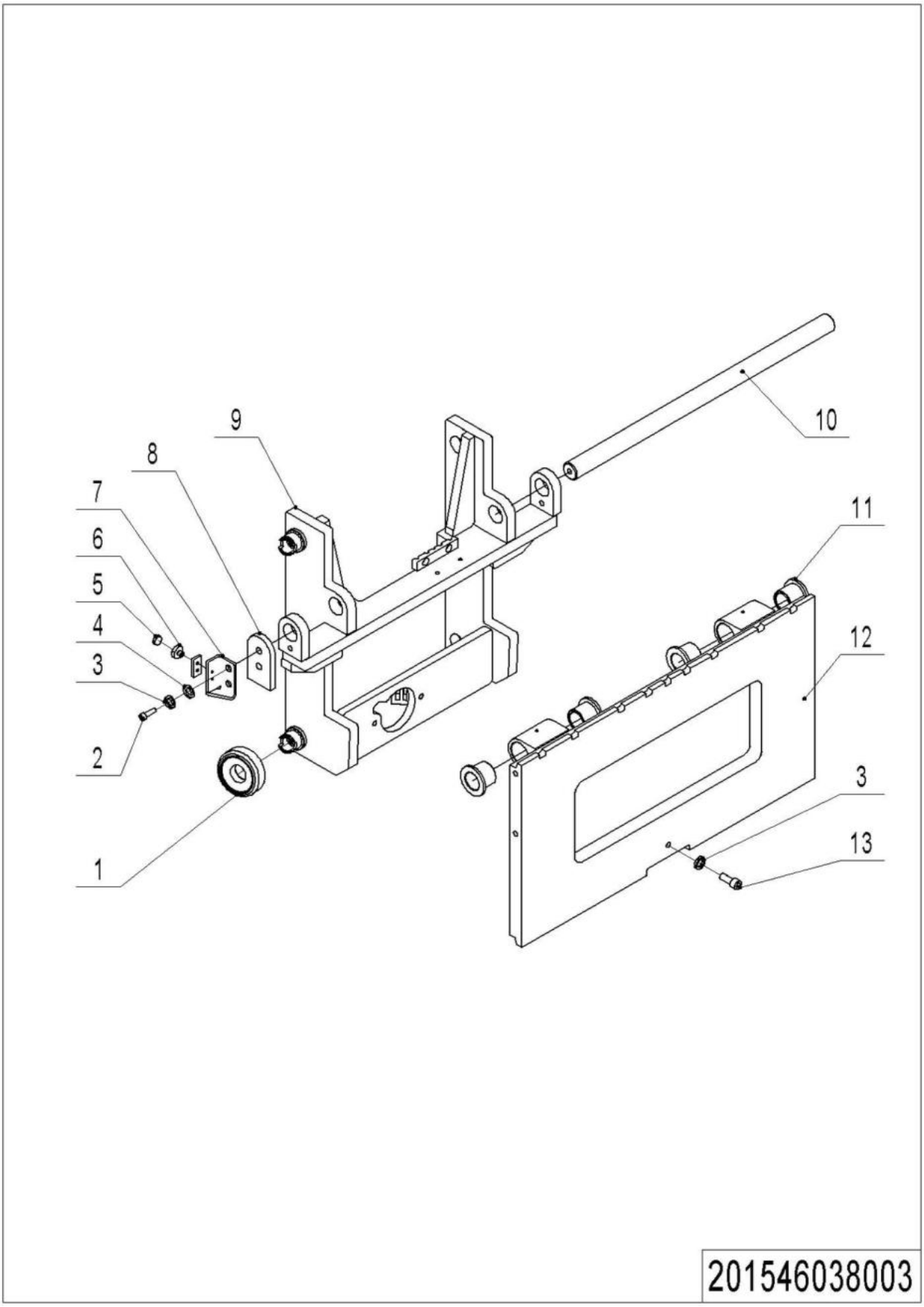

1= Supply as package. 2= Supply with constraints. 3= Phasing-out supply. 4= Supply as assembly. 5= Check other tables.

08 Fork Carriage (Triple Mast) (201546038003)

No.	Item Code	Mark	Item Description	Qty.	Substitute	Note
1	940200300004		Compound Roller	4		
2	910100300050	1	Bolt	4		
3	910400500008	1	Spring Washer	5		
4	910400100008	1	Flat Washer	4		
5	940600100001		Magnetic Steel	1		
6	940600200001		Mounting Base	1		
7	201538020021		Fixing Plate	1		
8	201038020010		Baffle	2		
9	201538010000		Carriage	1		
10	201538020000		Axle	1		
11	940500400002		Bearing	4		
12	201538010001		Fork	1		
13	910200200098	1	Screw	1		

1= Supply as package. 2= Supply with constraints. 3= Phasing-out supply. 4= Supply as assembly. 5= Check other tables.

Chapter5：Steering System, Braking System, Wheels

01 Tiller Unit (505646011001)

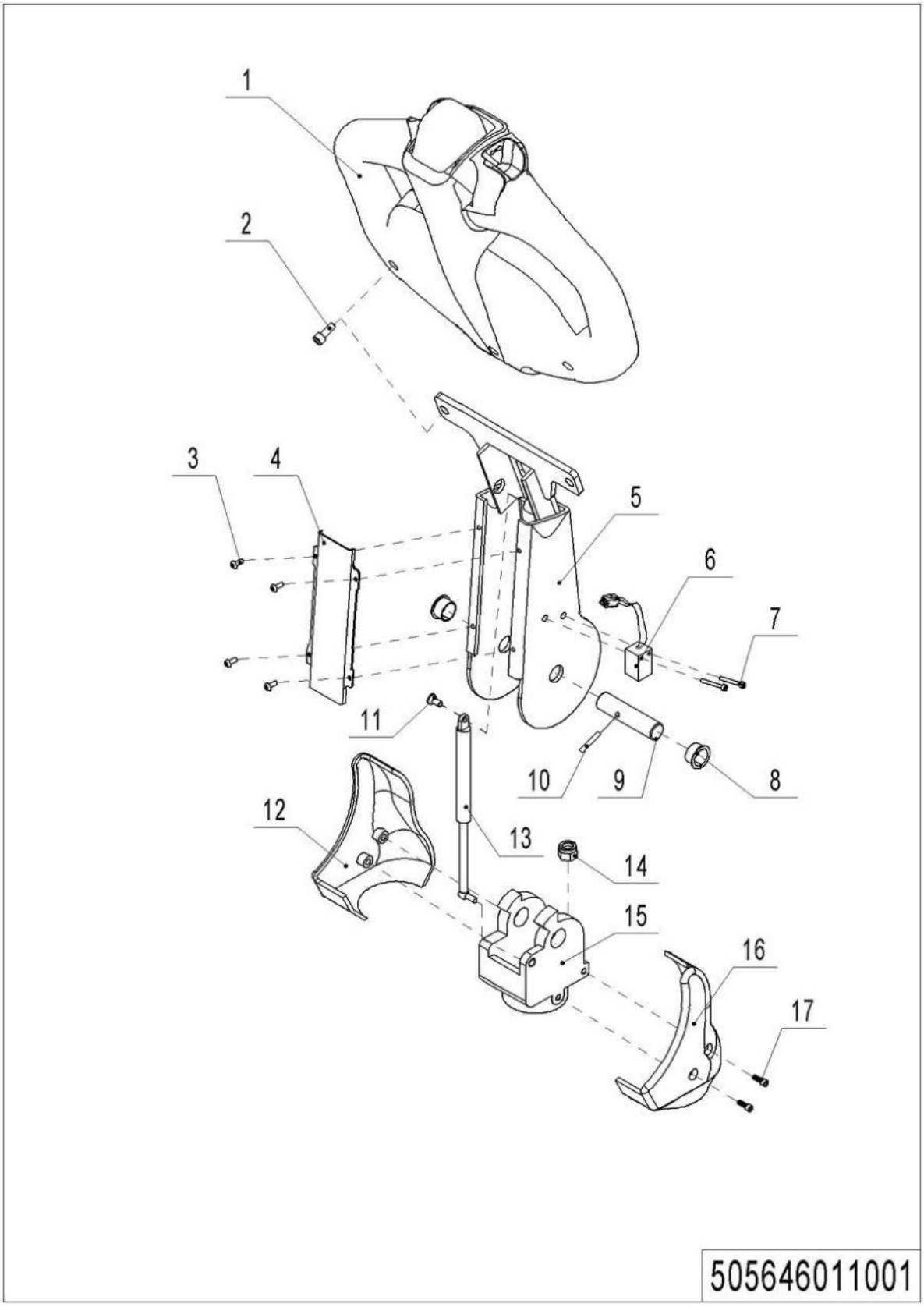

1= Supply as package. 2= Supply with constraints. 3= Phasing-out supply. 4= Supply as assembly. 5= Check other tables.

01 Tiller Unit (505646011001)

No.	Item Code	Mark	Item Description	Qty.	Substitute	Note
1	922100100012		Tiller	1		
1	922100100001		Tiller	1		
2	910200200058	1	Screw	2		
3	910200300005	1	Screw	4		
4	505611020013		Close Plate	1		
5	505611010001		Tiller	1		
5	505611010000		Tiller	1		
6	505633510000	2	Proximity Switch	1		
7	910200500015		Screw	2		
8	940500200002	1	Bushing	2		
9	505611020008		Axle	1		
10	910600400013	1	Spring Pin	1		
11	910200200057	1	Screw	1		
12	505611020010		Protective Cover	1		
13	940400100003		Air Spring	1		
14	910300500005	1	Nut	2		
15	505611020009		Bracket	1		
16	505611020011		Protective Cover	1		
17	910200300016	1	Screw	4		

1= Supply as package. 2= Supply with constraints. 3= Phasing-out supply. 4= Supply as assembly. 5= Check other tables.

02 Control Handle (505646010002)

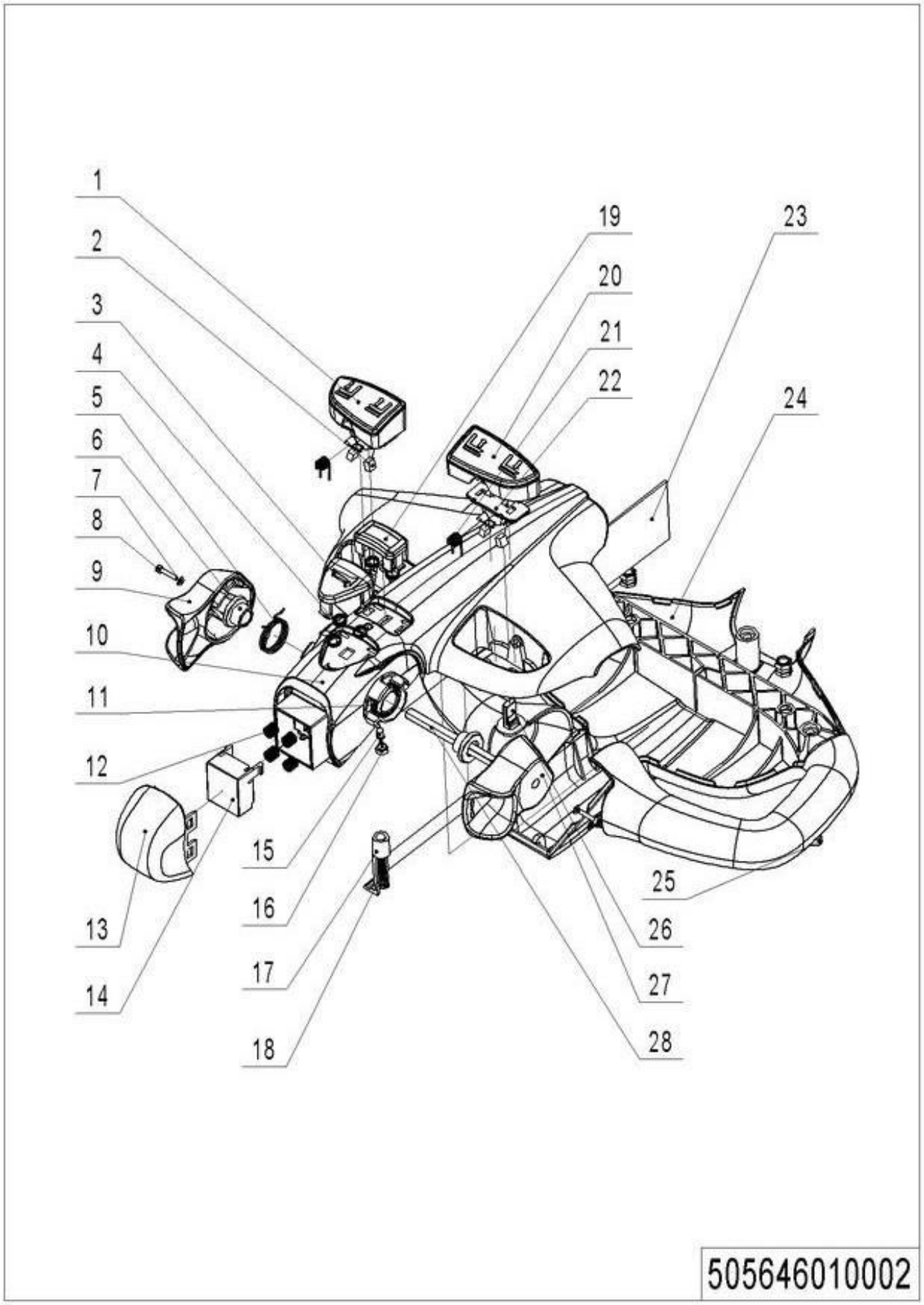

1= Supply as package. 2= Supply with constraints. 3= Phasing-out supply. 4= Supply as assembly. 5= Check other tables.

02 Control Handle (505646010002)

No.	Item Code	Mark	Item Description	Qty.	Substitute	Note
1	505698520016		Button cap	1		
2	505698520005		Magnet	4		
3	505698520002		Horn Button	1		
4	505698520003		Spring	5		
5	505698520027		Torsional Spring	1		
6	505698520004		Sleeve	2		
7	505698520009	1	Washer	2		
8	505698520008	1	Screw	2		
9	505698520001		Traction lever	1		
10	505698520014		Handle Cap	1		
11	505698520026		Torsional Spring	1		
12	505698520006		Spring	4		
13	505698520020		Button Cap-	1		
14	505698520019		Pedestal	1		
15	505698520024		Light	1		
16	505698520025		Lamp Holder	1		
17	505698520012		Clamp	1		
18	505698520023	1	Screw	1		
19	505698520021		Button Cap	1		
20	505698520022		Button Cap	1		
21	505698520018		Torsional Spring	2		
22	505698520017		Fixing Base	2		
23	505698520028		circuit Board	1		
24	505698520015		Handle Cap	1		
25	505698520007	1	Screw	3		
26	505698520013		Sensor	2		
27	505698520010		Traction lever	1		
28	505698520011		Axle-Traction lever	1		

1= Supply as package. 2= Supply with constraints. 3= Phasing-out supply. 4= Supply as assembly. 5= Check other tables.

03 EPS --- Electric Power Steering (201546031501)

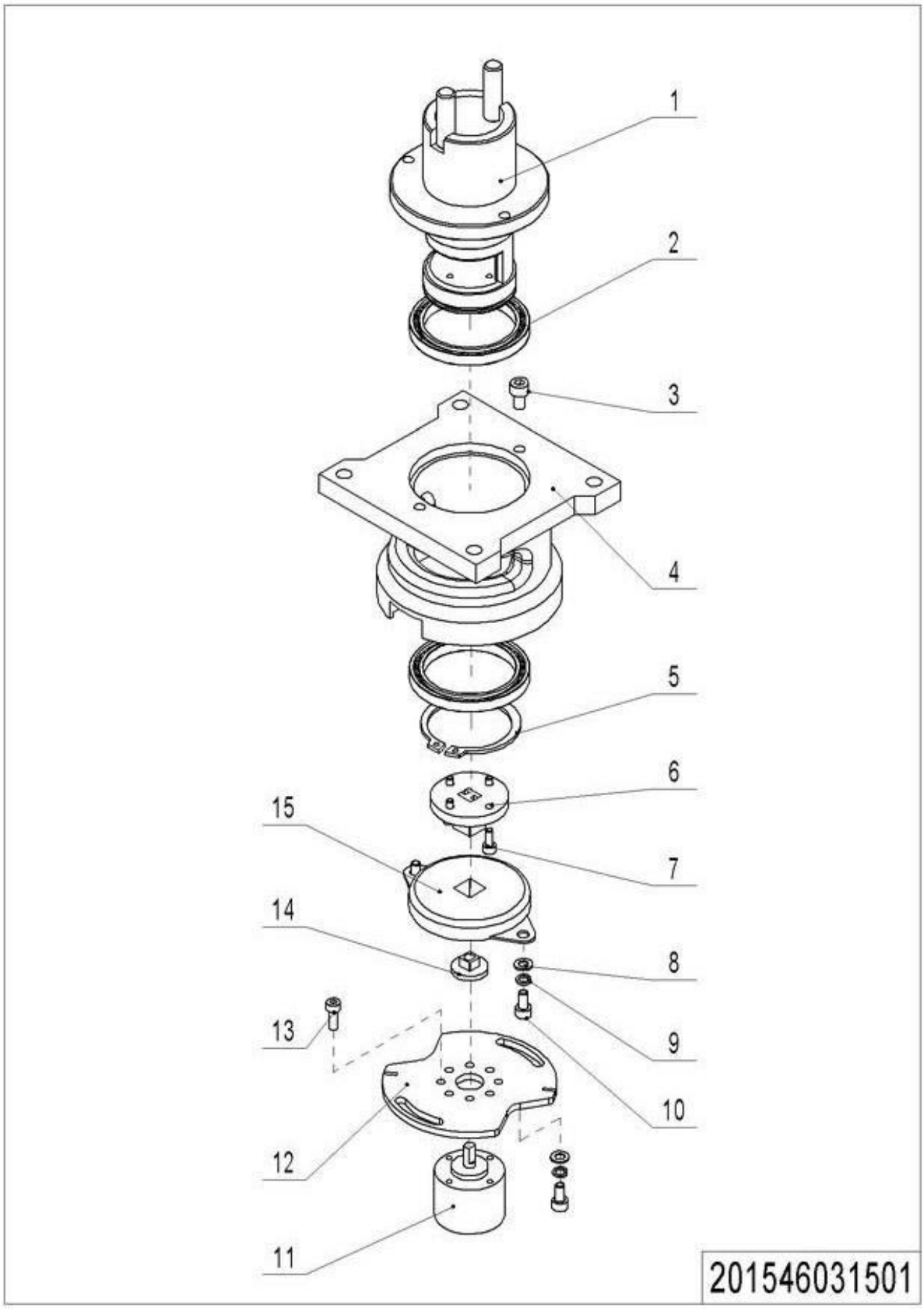

1= Supply as package. 2= Supply with constraints. 3= Phasing-out supply. 4= Supply as assembly. 5= Check other tables.

03 EPS --- Electric Power Steering (201546031501)

No.	Item Code	Mark	Item Description	Qty.	Substitute	Note
1	505631510001		Bracket	1		
2	910700200041	1	Bearing	2		
3	910200200032	1	Screw	3		
4	505631520002		Fixing Base	1		
5	910401300024	1	Circlip	1		
6	505631520005		Link Block	1		
7	910200500022	1	Screw	4		
8	910400100004	1	Flat Washer	4		
9	910400500004	1	Spring Washer	4		
10	910200200022	1	Screw	4		
11	505633010028		Potentiometer	1		
12	505731520001		Fixing Plate	1		
13	910200200014	1	Screw	4		
14	505631520003		Link Block	1		
15	940801200001		Rotary Damper	1		

1= Supply as package. 2= Supply with constraints. 3= Phasing-out supply. 4= Supply as assembly. 5= Check other tables.

04 Caster (532646016501)

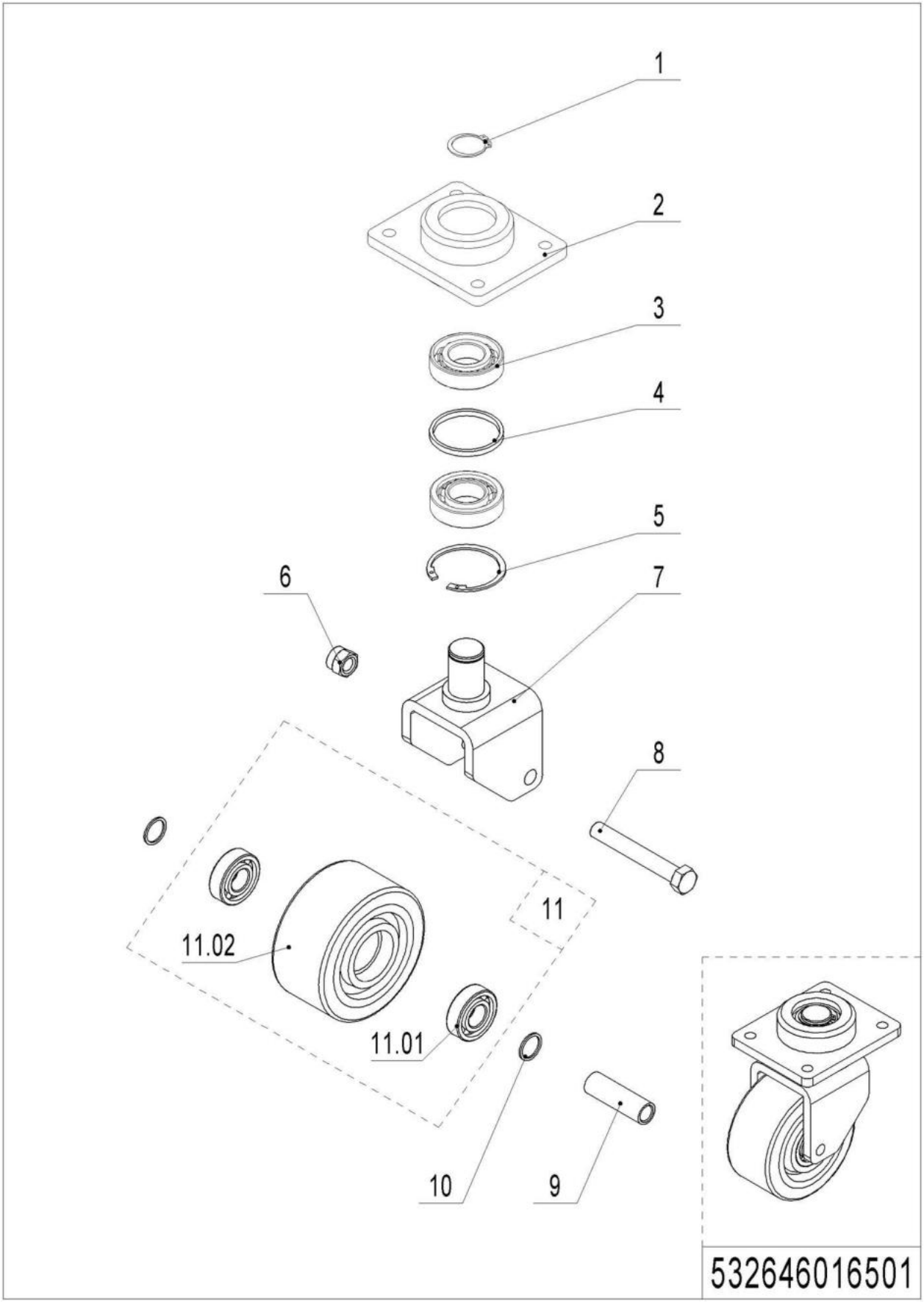

1= Supply as package. 2= Supply with constraints. 3= Phasing-out supply. 4= Supply as assembly. 5= Check other tables.

04 Caster (532646016501)

No.	Item Code	Mark	Item Description	Qty.	Substitute	Note
--	532616510000		Caster Assembly	2		
1	910401300016	1	Circlip	1		
2	532616520002		Bracket	1		
3	910700400004		Bearing	2		
4	532616520001		Check Ring	1		
5	910401400018	1	Circlip	1		
6	910300500007	1	Nut	1		
7	532616510001		Wheel Carrier	1		
8	910100100069	1	Bolt	1		
9	532616520003		Bushing	1		
10	940600500014		Washer	2		
11	532698510004		Wheel	1		
11.01	910700200019		Bearing	2		
11.02	940300300019		WheelΦ124x60	1		

1= Supply as package. 2= Supply with constraints. 3= Phasing-out supply. 4= Supply as assembly. 5= Check other tables.

05 Load Wheel (202046017001)

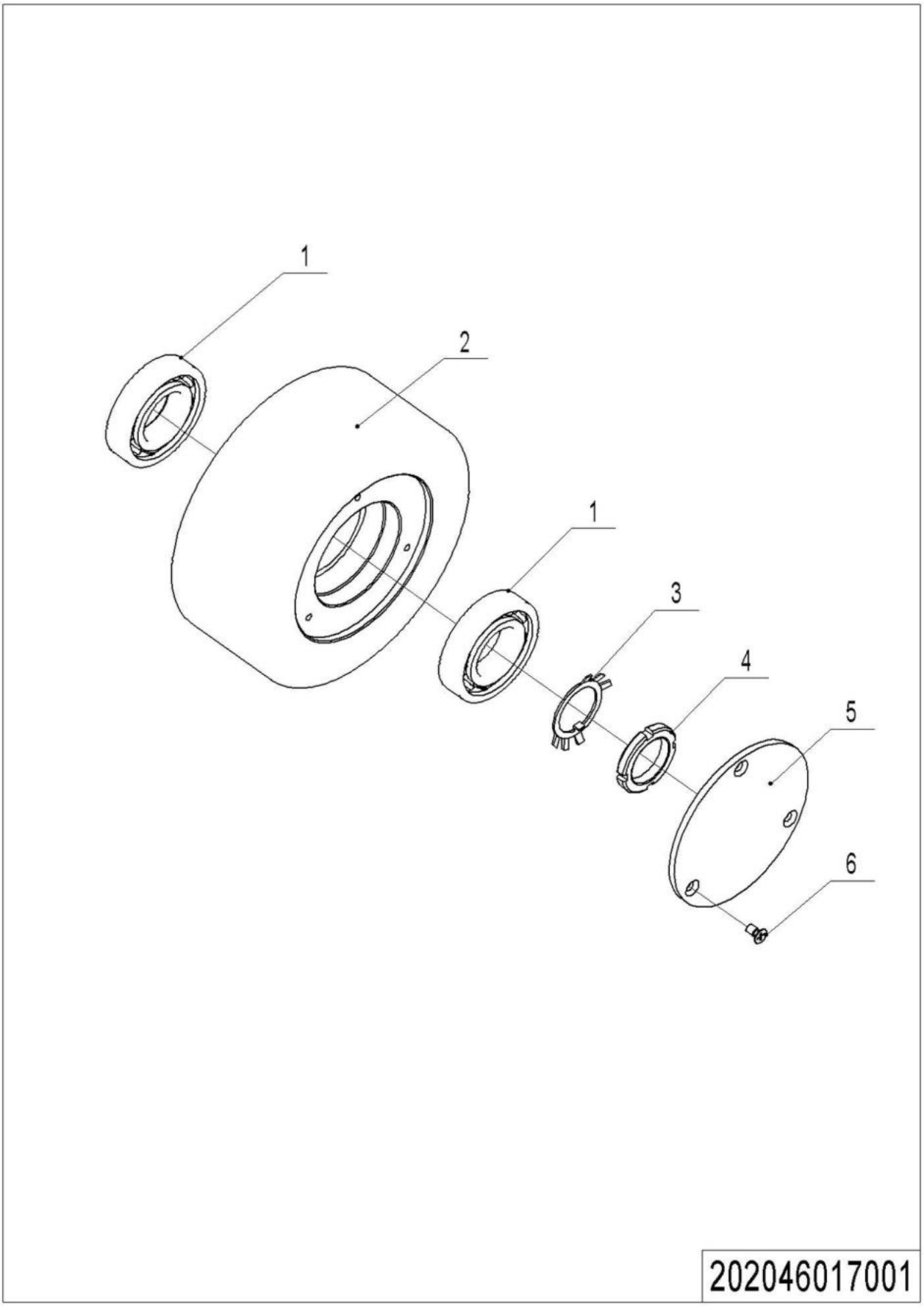

1= Supply as package. 2= Supply with constraints. 3= Phasing-out supply. 4= Supply as assembly. 5= Check other tables.

05 Load Wheel (202046017001)

No.	Item Code	Mark	Item Description	Qty.	Substitute	Note
1	910700200025		Bearing	2		
2	940300300025		WheelΦ230x100	1		
3	910400900007		Lock Washer	1		
4	910300700002		Nut	1		
5	201017020000		End Cap	1		
6	910200400016	1	Screw	3		

1= Supply as package. 2= Supply with constraints. 3= Phasing-out supply. 4= Supply as assembly. 5= Check other tables.

Chapter6: Electrical Parts

01 Wire Harness (KORDEL) (201546033001)

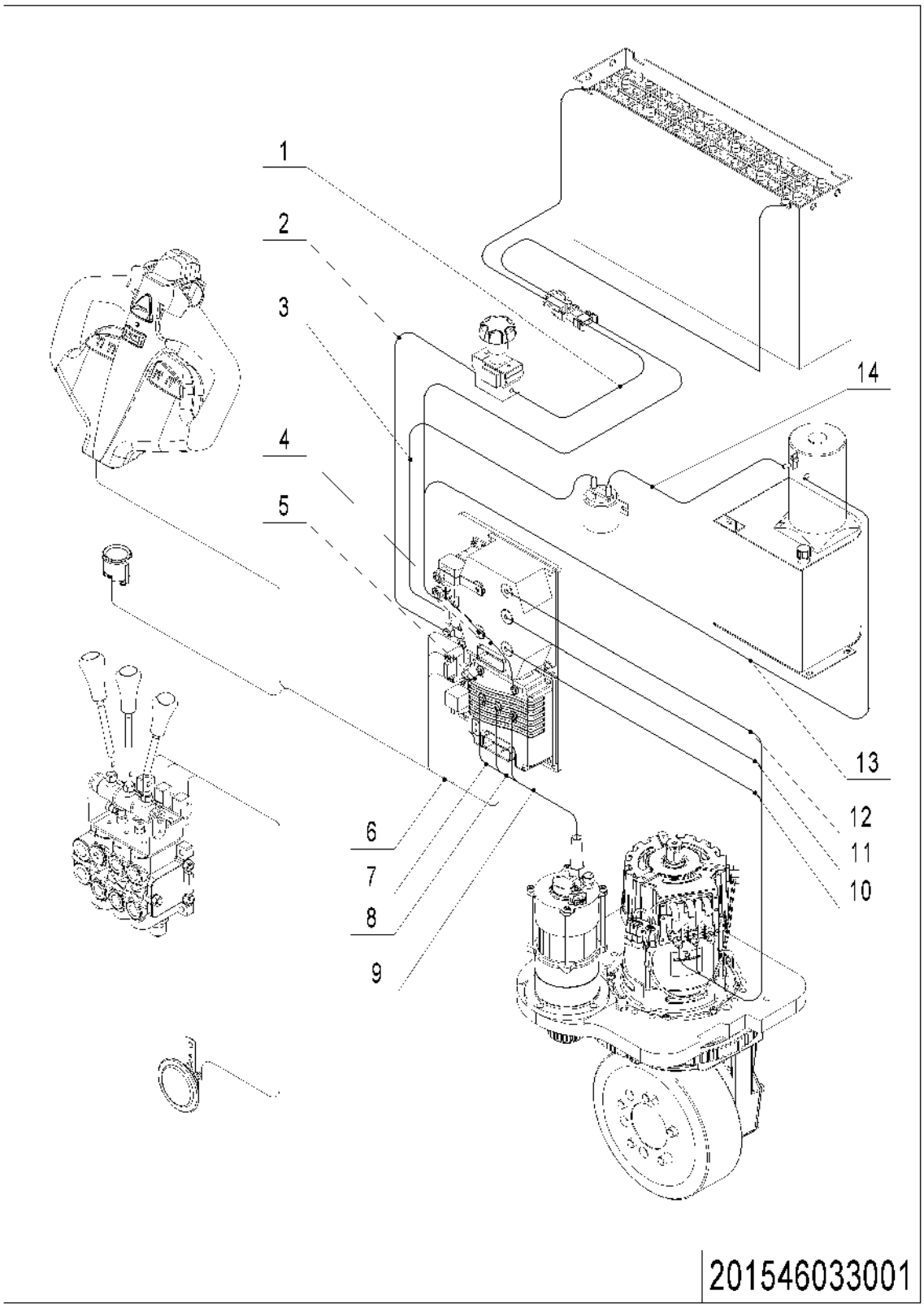

1= Supply as package. 2= Supply with constraints. 3= Phasing-out supply. 4= Supply as assembly. 5= Check other tables.

01 Wire Harness (KORDEL) (201546033001)

No.	Item Code	Mark	Item Description	Qty.	Substitute	Note
1	201033010011		Wire Harness	1		Lead-acid
1	201033010023		Wire Harness	1		Lead-acid+Side
1	201033010032		Wire Harness	1		Li
1	201033010034		Wire Harness	1		Side Extraction
2	201033010004		Cable	1		
3	201033010014		Cable	1		
4	201033010019		Cables	1		
5	201033010017		Cables	1		
6	201033010016		Wire Harness	1		Lead-acid
6	201033010033		Wire Harness	1		Li
7	201033010020		Cables	1		
8	201033010021		Cables	1		
9	201033010022		Cables	1		
10	201033010018		Cable	1		
11	201033010025		Cable	1		
12	201033010026		Cable	1		
13	201033010005		Cable	1		
14	201033010015		Cable	1		

1= Supply as package. 2= Supply with constraints. 3= Phasing-out supply. 4= Supply as assembly. 5= Check other tables.

02 Wire Harness (ZD) (201546033002)

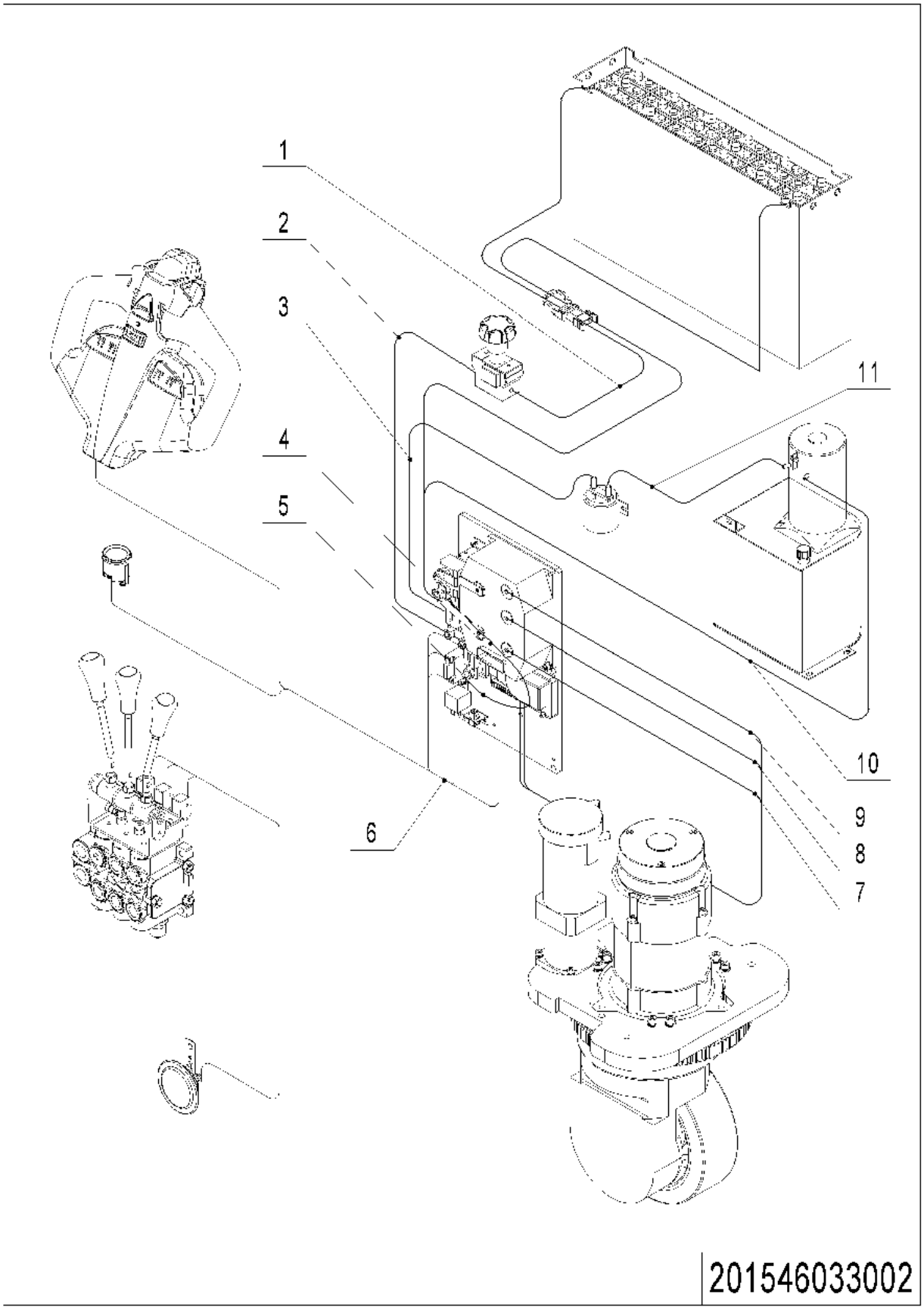

1= Supply as package. 2= Supply with constraints. 3= Phasing-out supply. 4= Supply as assembly. 5= Check other tables.

02 Wire Harness (ZD) (201546033002)

No.	Item Code	Mark	Item Description	Qty.	Substitute	Note
1	201033010011		Wire Harness	1		Lead-acid
1	201033010023		Wire Harness	1		Lead-acid+Side
1	201033010032		Wire Harness	1		Li
1	201033010034		Wire Harness	1		Side Extraction
2	201033010004		Cable	1		
3	201033010014		Cable	1		
4	201033010030		Cables	1		
5	201033010029		Cables	1		
6	201033010027		Wire Harness	1		Lead-acid
6	201033010031		Wire Harness	1		Li
7	201033010018		Cable	1		
8	201033010025		Cable	1		
9	201033010026		Cable	1		
10	201033010005		Cable	1		
11	201033010015		Cable	1		

1= Supply as package. 2= Supply with constraints. 3= Phasing-out supply. 4= Supply as assembly. 5= Check other tables.

03 Controller (KORDEL) (201546033003)

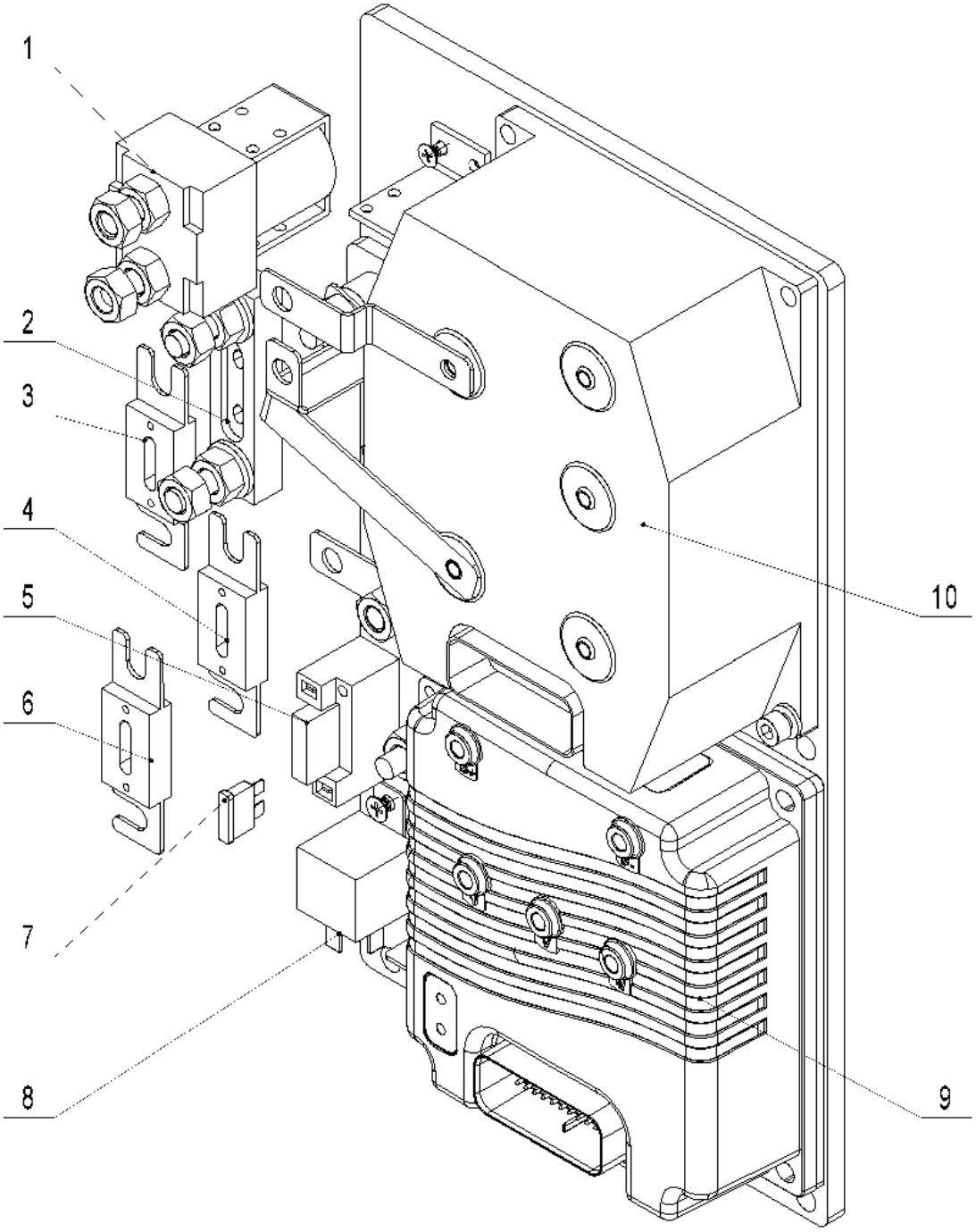

201546033003

1= Supply as package. 2= Supply with constraints. 3= Phasing-out supply. 4= Supply as assembly. 5= Check other tables.

03 Controller (KORDEL) (201546033003)

No.	Item Code	Mark	Item Description	Qty.	Substitute	Note
1	920700100004		Contactor	1		
2	920100400002		Fuse Holder	1		
3	920100100008		Fuse	1		
4	920100100007		Fuse	1		
5	920100400006		Fuse Holder	1		
6	920100100001		Fuse	1		
7	920100200002		Fuse	1		
8	920800100001		Relay	1		
9	921400100004		Controller	1		
10	921400100005		Controller	1		

04 Controller (ZD) (201546033004)

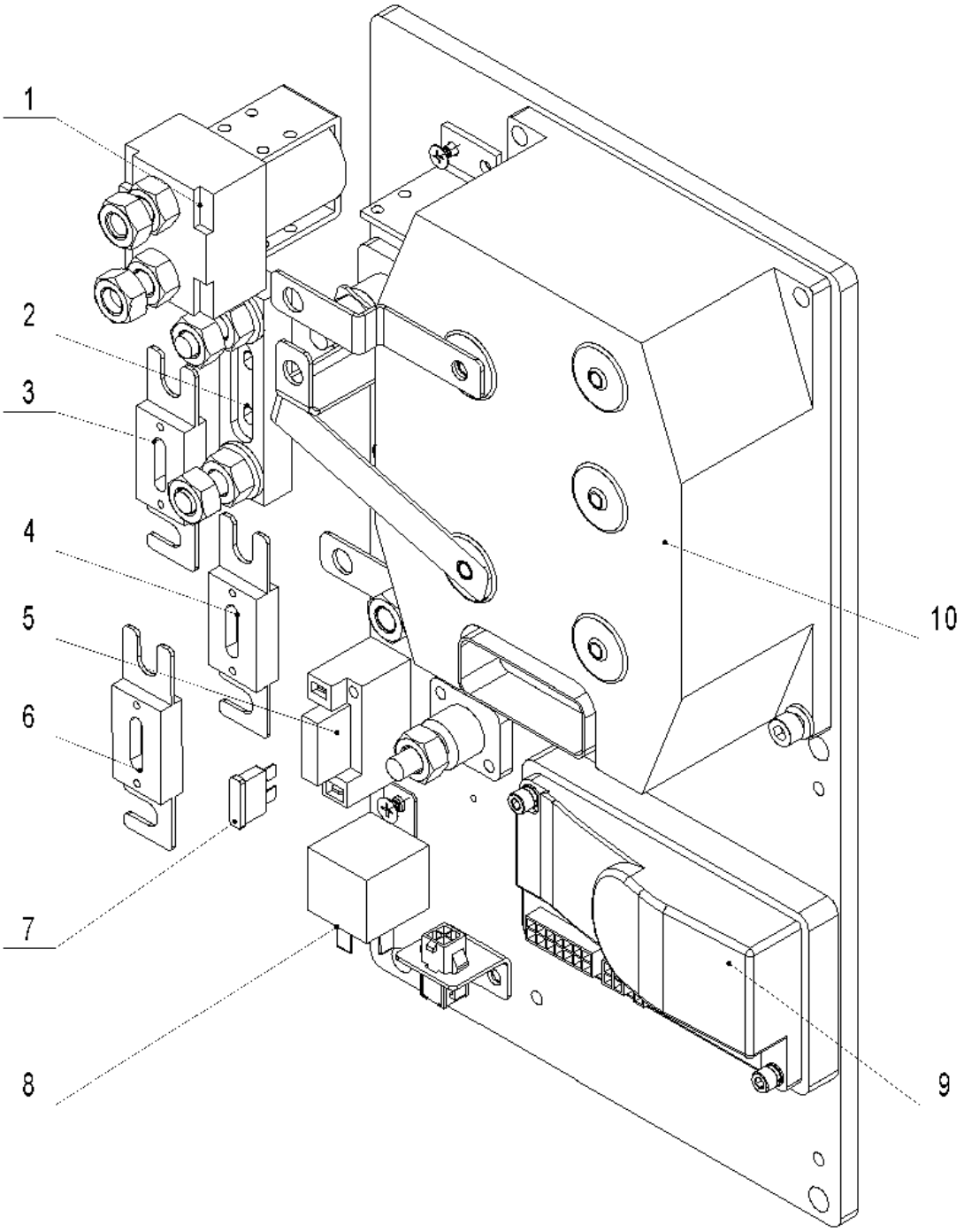

201546033004

1= Supply as package. 2= Supply with constraints. 3= Phasing-out supply. 4= Supply as assembly. 5= Check other tables.

04 Controller (ZD) (201546033004)

No.	Item Code	Mark	Item Description	Qty.	Substitute	Note
1	920700100004		Contactor	1		
2	920100400002		Fuse Holder	1		
3	920100100008		Fuse	1		
4	920100100007		Fuse	1		
5	920100400006		Fuse Holder	1		
6	920100100001		Fuse	1		
7	920100200002		Fuse	1		
8	920800100001		Relay	1		
9	921400100023		Controller	1		
10	921400100005		Controller	1		

1= Supply as package. 2= Supply with constraints. 3= Phasing-out supply. 4= Supply as assembly. 5= Check other tables.

05 Charger (201546036501)

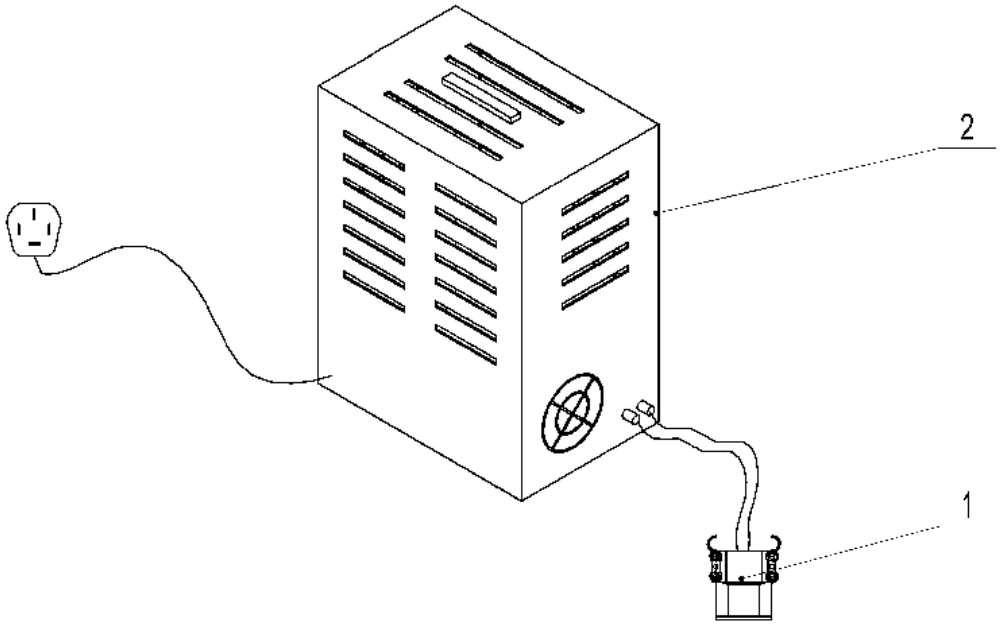

201546036501

1= Supply as package. 2= Supply with constraints. 3= Phasing-out supply. 4= Supply as assembly. 5= Check other tables.

05 Charger (201546036501)

No.	Item Code	Mark	Item Description	Qty.	Substitute	Note
1	921000200183		Charger24V35A(Aisa-CHN)	1		Lead-acid
1	921000200184		Charger24V35A(Aisa-ENG)	1		Lead-acid
1	921000200185		Charger24V35A(EU)	1		Lead-acid
1	921000200186		Charger24V35A(ENG)	1		Lead-acid
1	921000200187		Charger24V35A(AUS)	1		Lead-acid
1	921000200188		Charger24V35A(USA)	1		Lead-acid
1	921000200025		Charger24V55A(Aisa-CHN)	1		Lead-acid
1	921000200026		Charger24V55A(Aisa-ENG)	1		Lead-acid
1	921000200027		Charger24V55A(EU)	1		Lead-acid
1	921000200028		Charger24V55A(AUS)	1		Lead-acid
1	921000200029		Charger24V55A(ENG)	1		Lead-acid
1	921000200030		Charger24V55A(USA)	1		Lead-acid
1	921000200219		Charger 24V80A (Aisa-CHN)	1		Lead-acid
1	921000200220		Charger 24V80A (Aisa-ENG)	1		Li
1	921000200221		Charger 24V80A (EU)	1		Li
1	921000200222		Charger 24V80A (ENG)	1		Li
1	921000200223		Charger 24V80A (AUS)	1		Li
1	921000200224		Charger 24V80A (USA)	1		Li
2	920400100001		Connector	1		Lead-acid
2	920400100019		Connector	1		Li

1= Supply as package. 2= Supply with constraints. 3= Phasing-out supply. 4= Supply as assembly. 5= Check other tables.

06 Traction Battery (201546037001)

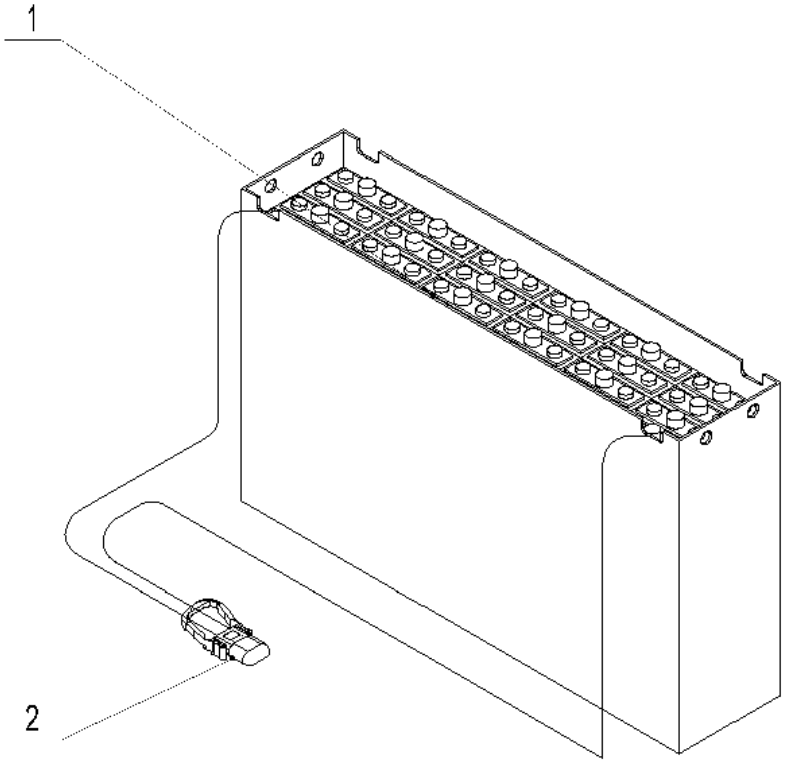

201546037001

1= Supply as package. 2= Supply with constraints. 3= Phasing-out supply. 4= Supply as assembly. 5= Check other tables.

06 Traction Battery (201546037001)

No.	Item Code	Mark	Item Description	Qty.	Substitute	Note
1	201037010000		Battery24V270Ah(welded)	1		
1	201037010001		Battery24V270Ah	1		
1	201037010002		Battery24V360Ah(welded)	1		
1	201037010003		Battery24V360Ah	1		
1	206037010001		Battery24V400Ah(welded)	1		
1	206037010002		Battery24V400Ah	1		
1	201037010004		Battery24V360Ah	1		
2	920400100007		Connector	1		Lead-acid

07 Traction Battery(Li) (201546037001)

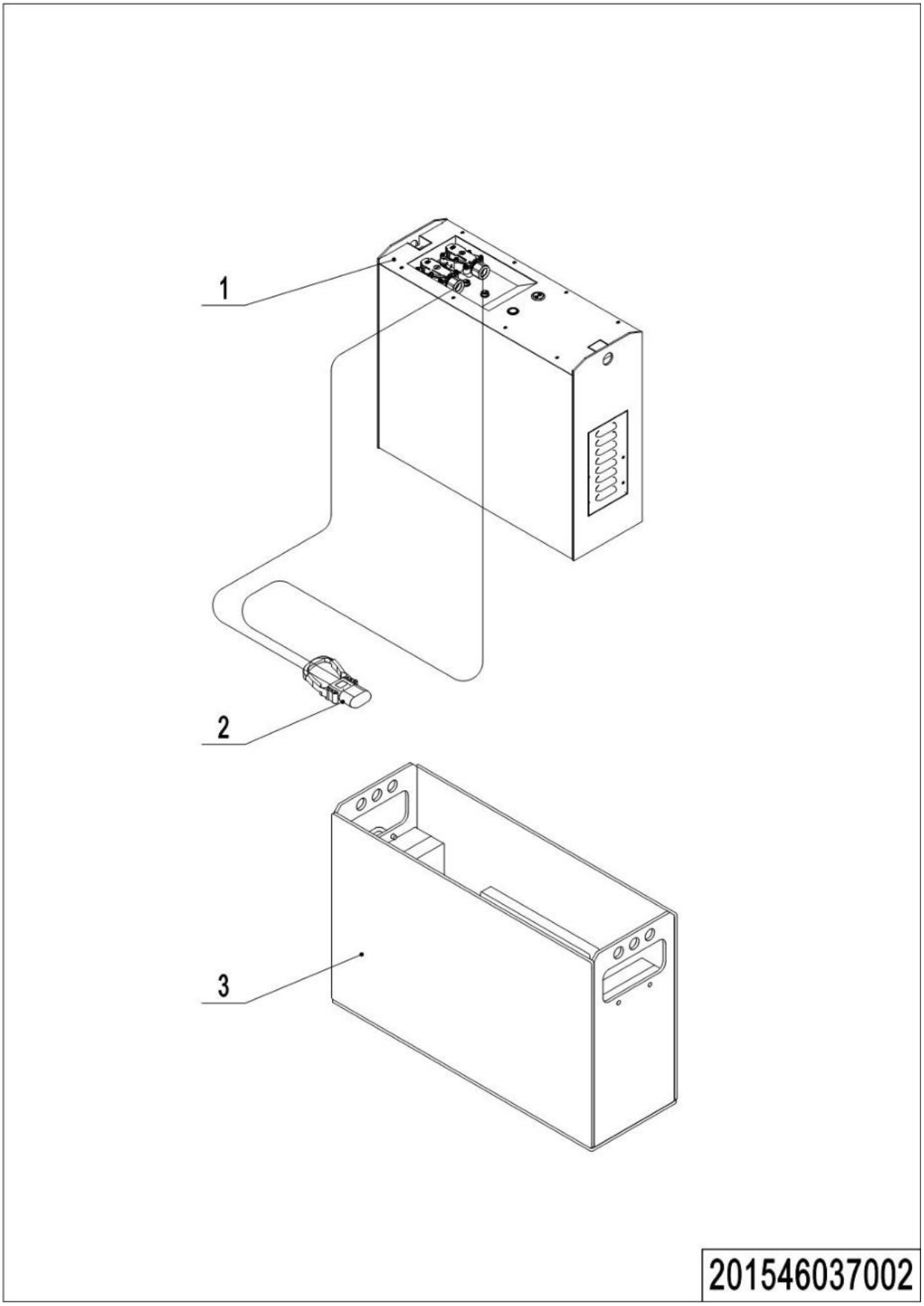

1= Supply as package. 2= Supply with constraints. 3= Phasing-out supply. 4= Supply as assembly. 5= Check other tables.

07 Traction Battery(Li) (201546037001)

No.	Item Code	Mark	Item Description	Qty.	Substitute	Note
1	920600100021		Li Battery24V200Ah	1		
1	920600100054		Li Battery24V200Ah	1		
1	920600100100		Li Battery24V300Ah	1		Not For Triple Mast
2	920400100017		Connector	1		Li
3	201037010005		Battery Box	1		

1= Supply as package. 2= Supply with constraints. 3= Phasing-out supply. 4= Supply as assembly. 5= Check other tables.

08 Display Assembly (505646010001)

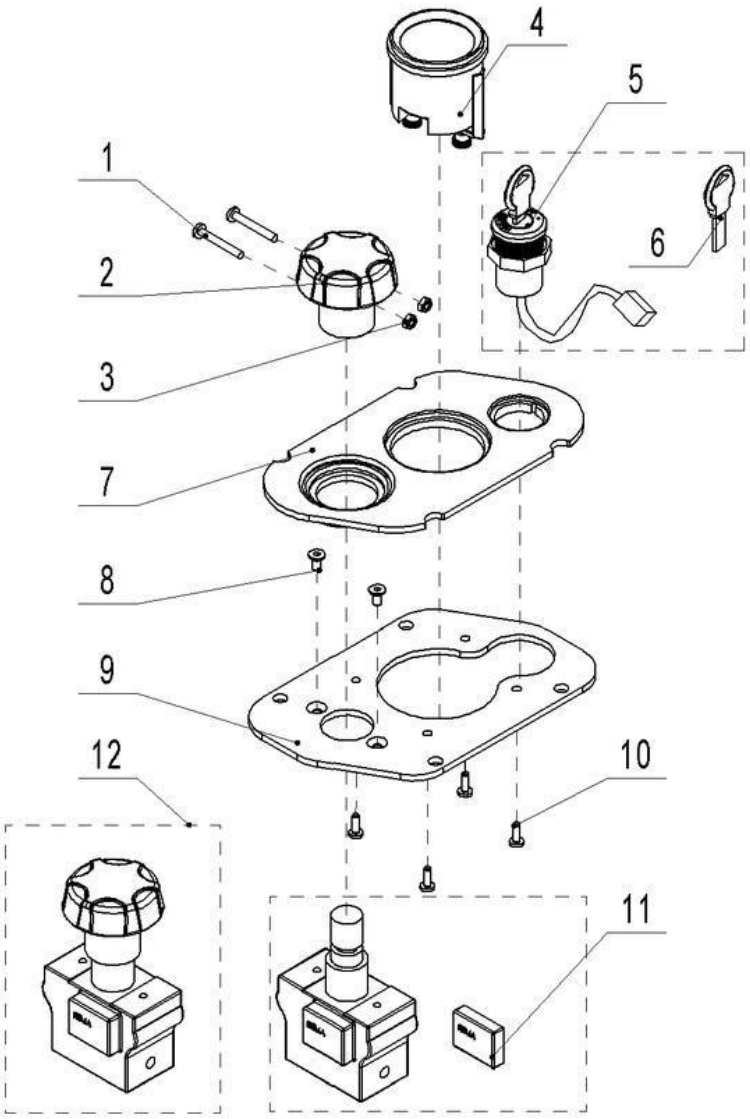

505646010001

1= Supply as package. 2= Supply with constraints. 3= Phasing-out supply. 4= Supply as assembly. 5= Check other tables.

08 Display Assembly (505646010001)

No.	Item Code	Mark	Item Description	Qty.	Substitute	Note
1	910200500016		Screw	2		
2	505698520029	2	Button	1		
3	910300100002		Nut	2		
4	921100100001	2	Battery Indicator	1		
4	921100100044	2	Battery Indicator	1		
5	505634010000	2	Key Switch	1		
6	505698520031	2	Key	1		
7	505610020000		Panel	1		
8	910200400010		Screw	2		
9	505610020001		Fixing Plate	1		
10	910201300001		Screw	4		
11	920200100011	2	Emergency Button	1		
12	920200100001	2	Emergency Button	1		

1= Supply as package. 2= Supply with constraints. 3= Phasing-out supply. 4= Supply as assembly. 5= Check other tables.

09 Display Assembly(Li) (201046010001)

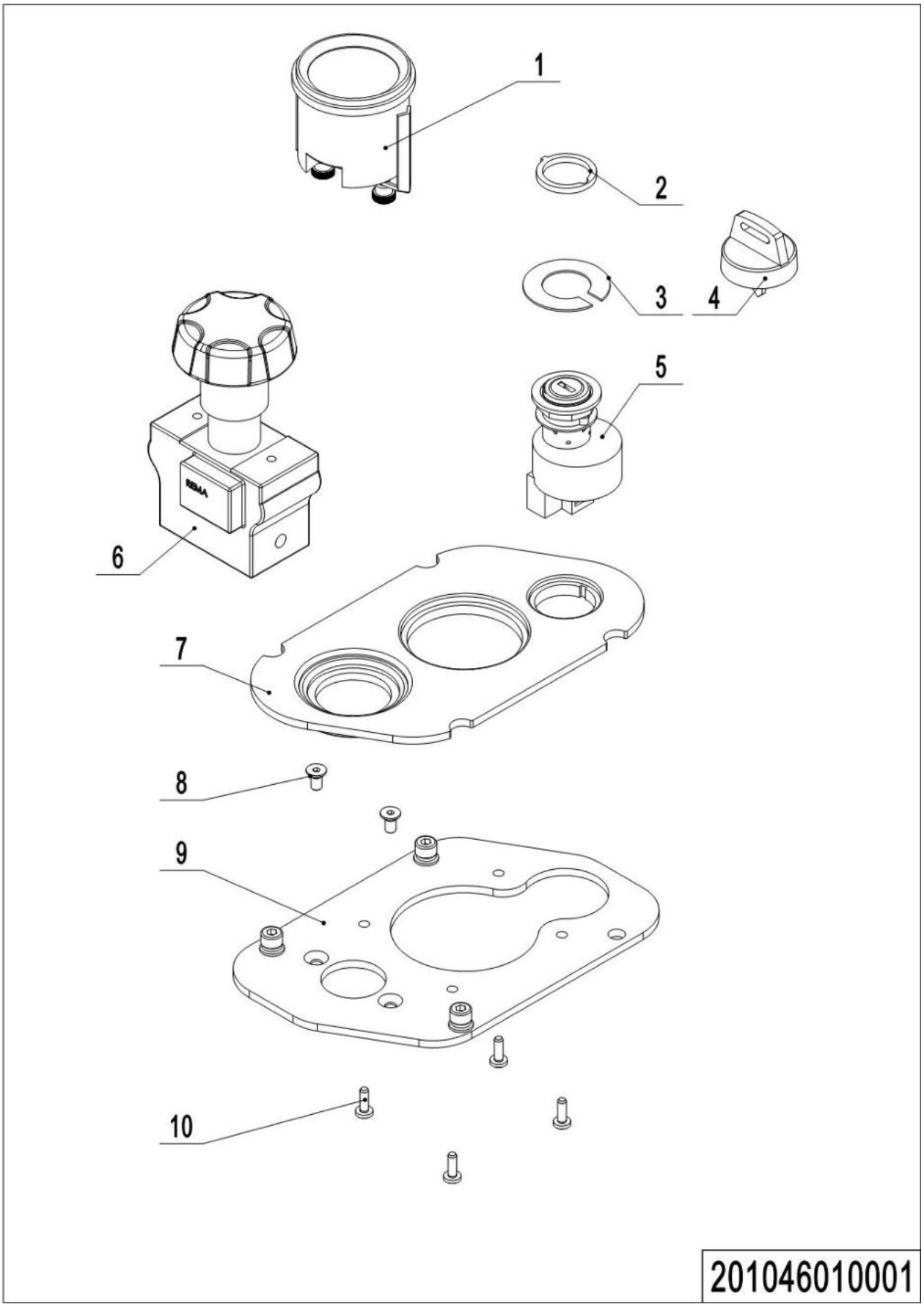

1= Supply as package. 2= Supply with constraints. 3= Phasing-out supply. 4= Supply as assembly. 5= Check other tables.

09 Display Assembly(Li) (505646010001)

No.	Item Code	Mark	Item Description	Qty.	Substitute	Note
1	921100100004		Coulombmeter	1		Li
2	505634020001		Washer	1		Li
3	505634020002		Washer	1		Li
4	505698520112		Key	1		Li
5	505634010001		Key Switch	1		Li
6	920200100001	2	Emergency Button	1		
7	505610020000		Panel	1		
8	910200400010		Screw	2		
9	505610020001		Fixing Plate	1		
10	910201300001		Screw	4		

1= Supply as package. 2= Supply with constraints. 3= Phasing-out supply. 4= Supply as assembly. 5= Check other tables.

Chapter7: Special Parts

01 Load Backrest (216546040501)

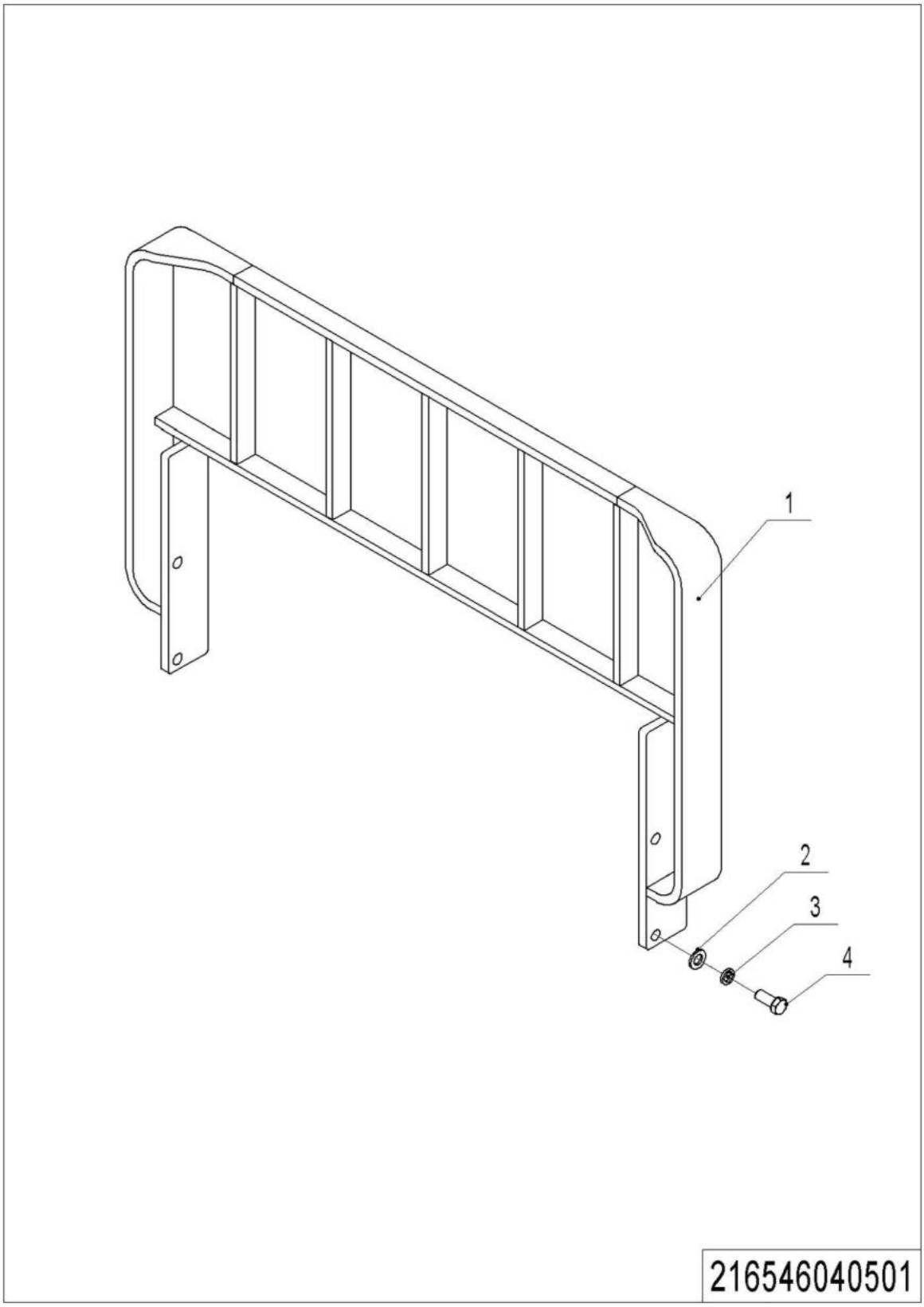

1= Supply as package. 2= Supply with constraints. 3= Phasing-out supply. 4= Supply as assembly. 5= Check other tables.

01 Load Backrest (216546040501)

No.	Item Code	Mark	Item Description	Qty.	Substitute	Note
1	216540510000		Load Backrest	1		
1	216540510001		Load Backrest	1		
2	910400100008	1	Flat Washer	4		
3	910400500008	1	Spring Washer	4		
4	910100300050	1	Bolt	4		

02 Guard Arm (505646017501)

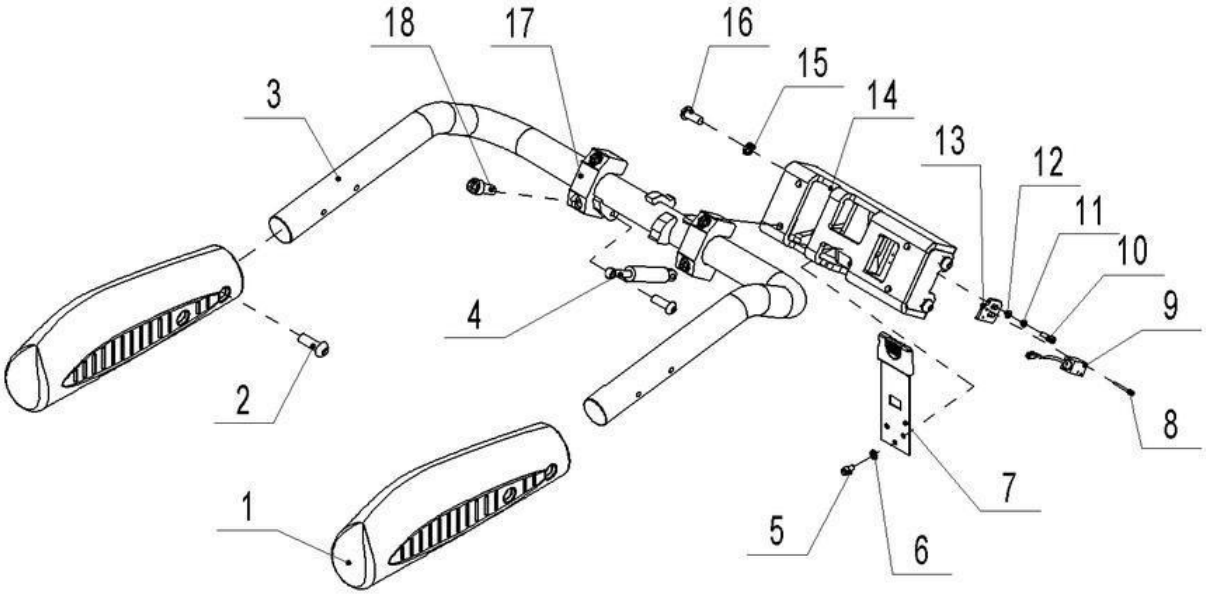

505646017501

1= Supply as package. 2= Supply with constraints. 3= Phasing-out supply. 4= Supply as assembly. 5= Check other tables.

02 Guard Arm (505646017501)

No.	Item Code	Mark	Item Description	Qty.	Substitute	Note
1	505617510002		Guard Arm Sleeve	1		
2	910200300025	1	Screw	5		
3	505617510001		Guard Arm	1		
4	940400100006		Air Spring	1		
5	910200300017	1	Screw	3		
6	910400500005	1	Spring Washer	3		
7	505617510005		Leaf Spring	1		
8	910200500015	1	Screw	2		
9	505633510001	2	Proximity Switch	1		
10	910400500004	1	Spring Washer	2		
11	910400100004	1	Flat Washer	2		
12	910200200023	1	Screw	2		
13	505618020026		Mounting Plate	1		
14	505617510000		Base	1		
15	910400500007	1	Spring Washer	4		
16	910100300036	1	Bolt	4		
17	505617520005		Fixing Base	2		
18	910200200080	1	Screw	4		
--	505617501000		Protective Arm Assembly	1		

1= Supply as package. 2= Supply with constraints. 3= Phasing-out supply. 4= Supply as assembly. 5= Check other tables.

03 Platform (505646018001)

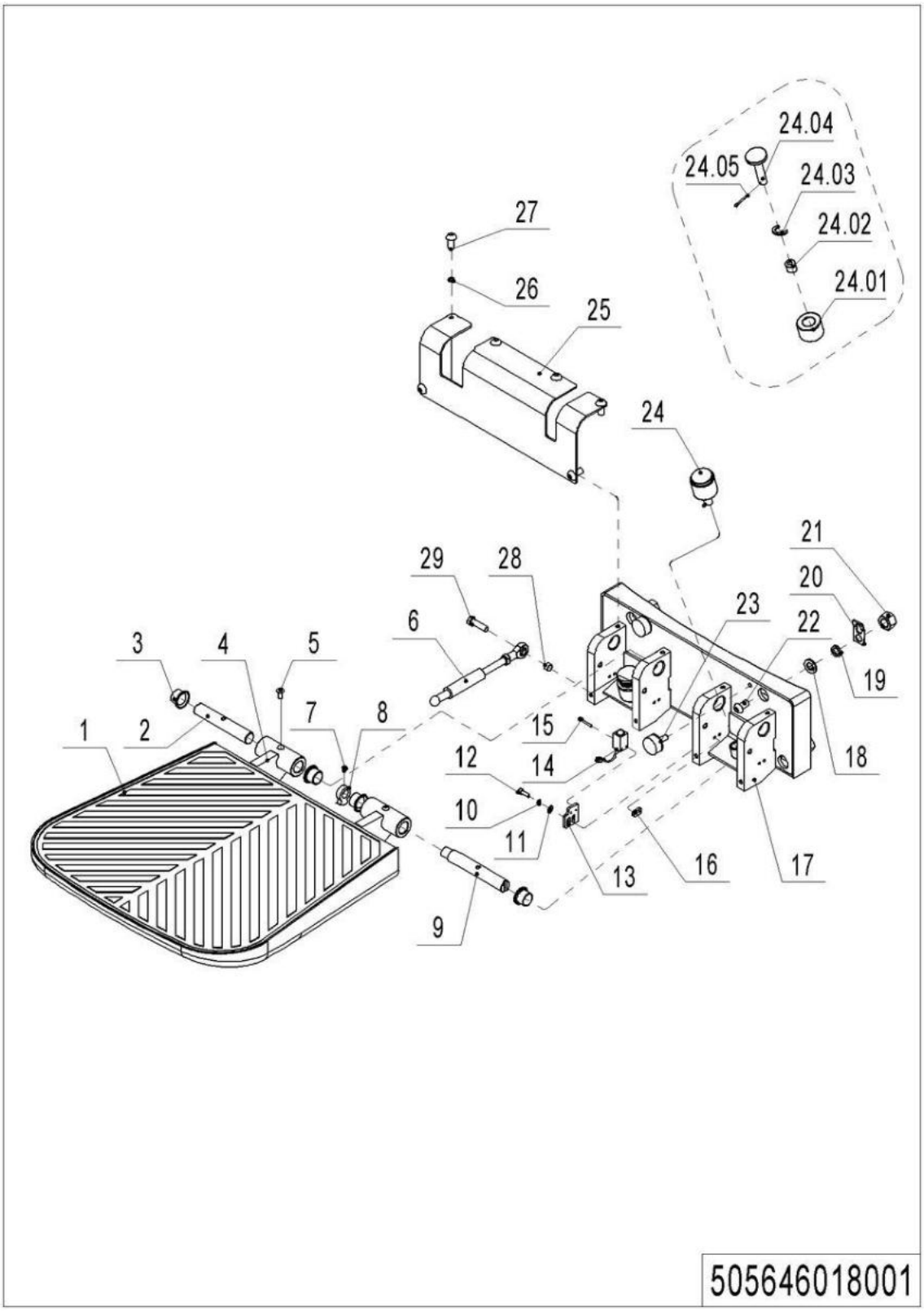

1= Supply as package. 2= Supply with constraints. 3= Phasing-out supply. 4= Supply as assembly. 5= Check other tables.

03 Platform (505646018001)

No.	Item Code	Mark	Item Description	Qty.	Substitute	Note
1	505618020018		Rubber Mat	1		
2	505618020020		Axle	1		
3	940500200008	1	Bushing	4		
4	505618010000		Platform	1		
5	910200300018	1	Screw	2		
6	940400100039		Air Spring	1		
7	910300400006	1	Nut	1		
8	505618020024		Cam	1		
9	505618020017		Pin	1		
10	910400500004	1	Spring Washer	2		
11	910400100004	1	Flat Washer	2		
12	910200200023	1	Screw	2		
13	505618020026		Mounting Plate	1		
14	910200500015	1	Screw	2		
15	505633510002	2	Proximity Switch	1		
16	505618020027		Mounting Plate	1		
17	505618010001		Mounting Base	1		
18	910400100008	1	Flat Washer	4		
19	910400500008	1	Spring Washer	4		
20	505618020025		Pipe Clip	1		
21	910300500006	1	Nut	4		
22	910200200100	1	Screw	4		
23	505618020016		Crash Pad	2		
24	505698510002		Buffer Kits	2		
24.01	505618020029		Crash Pad	2		
24.02	505618020030		Sleeve	2		
24.03	505618020032		Pad	2		
24.04	505618020021	1	Pin	2		
24.05	910600600026	1	Cotter Pin	2		
25	505618020019		Protective Cover	1		

1= Supply as package. 2= Supply with constraints. 3= Phasing-out supply. 4= Supply as assembly. 5= Check other tables.

03 Platform (505646018001) Continuation

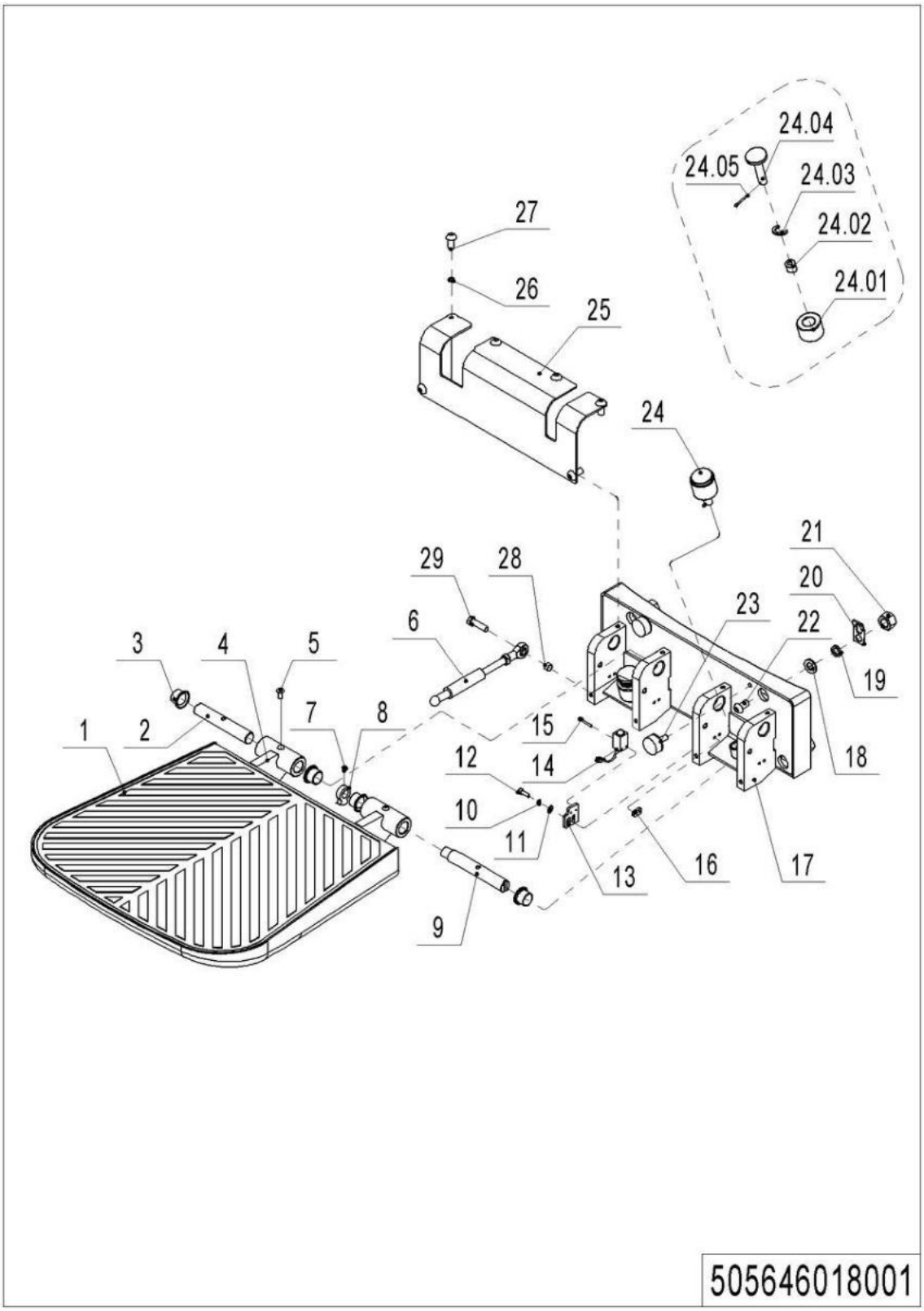

03 Platform (505646018001) Continuation

No.	Item Code	Mark	Item Description	Qty.	Substitute	Note
26	910400500005	1	Spring Washer	6		
27	910200300017	1	Screw	6		
28	505618020028	1	Spacer Bush	1		
29	910100300024	1	Bolt	1		
--	505618001000		Footboard Kit	1		

1= Supply as package. 2= Supply with constraints. 3= Phasing-out supply. 4= Supply as assembly. 5= Check other tables.

Chapter8: Others

01 Labels and Decals-US (201546047001)

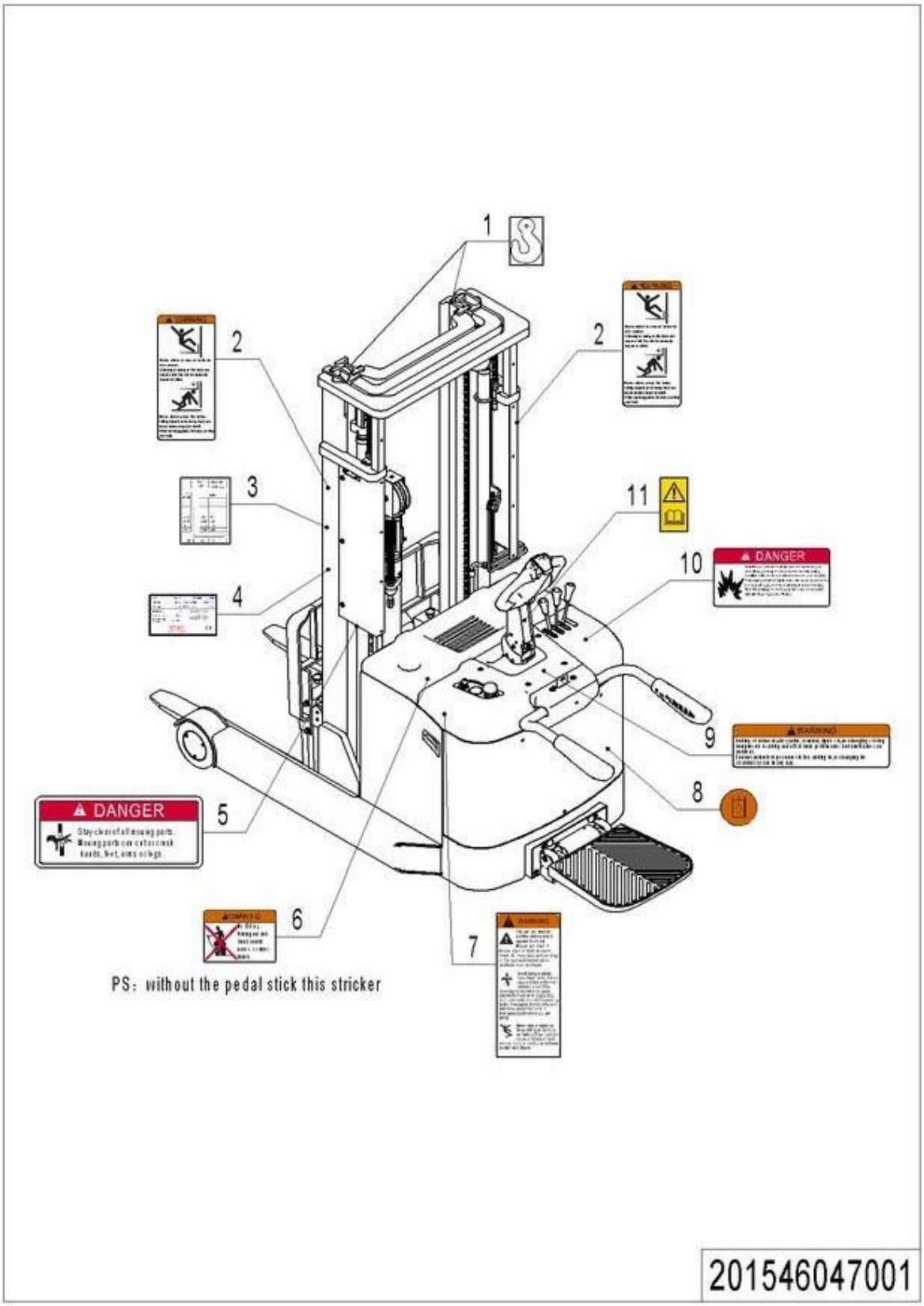

1= Supply as package. 2= Supply with constraints. 3= Phasing-out supply. 4= Supply as assembly. 5= Check other tables.

01 Labels and Decals-US (201546047001)

No.	Item Code	Mark	Item Description	Qty.	Substitute	Note
1	941200300001		Label	2		
2	941200100016		Label	2		
3	201547020000		Load Capacity Diagram	1		
4	201547020001		Truck data plate	1		
5	941200100014		Label	1		
6	941200100011		Label	1		
7	941200100009		Label	1		
8	941200300003		Label	1		
9	941200100010		Label	1		
10	941200100013		Label	1		
11	941200300002		Label	1		

1= Supply as package. 2= Supply with constraints. 3= Phasing-out supply. 4= Supply as assembly. 5= Check other tables.

02 Labels and Decals-EU (201546047002)

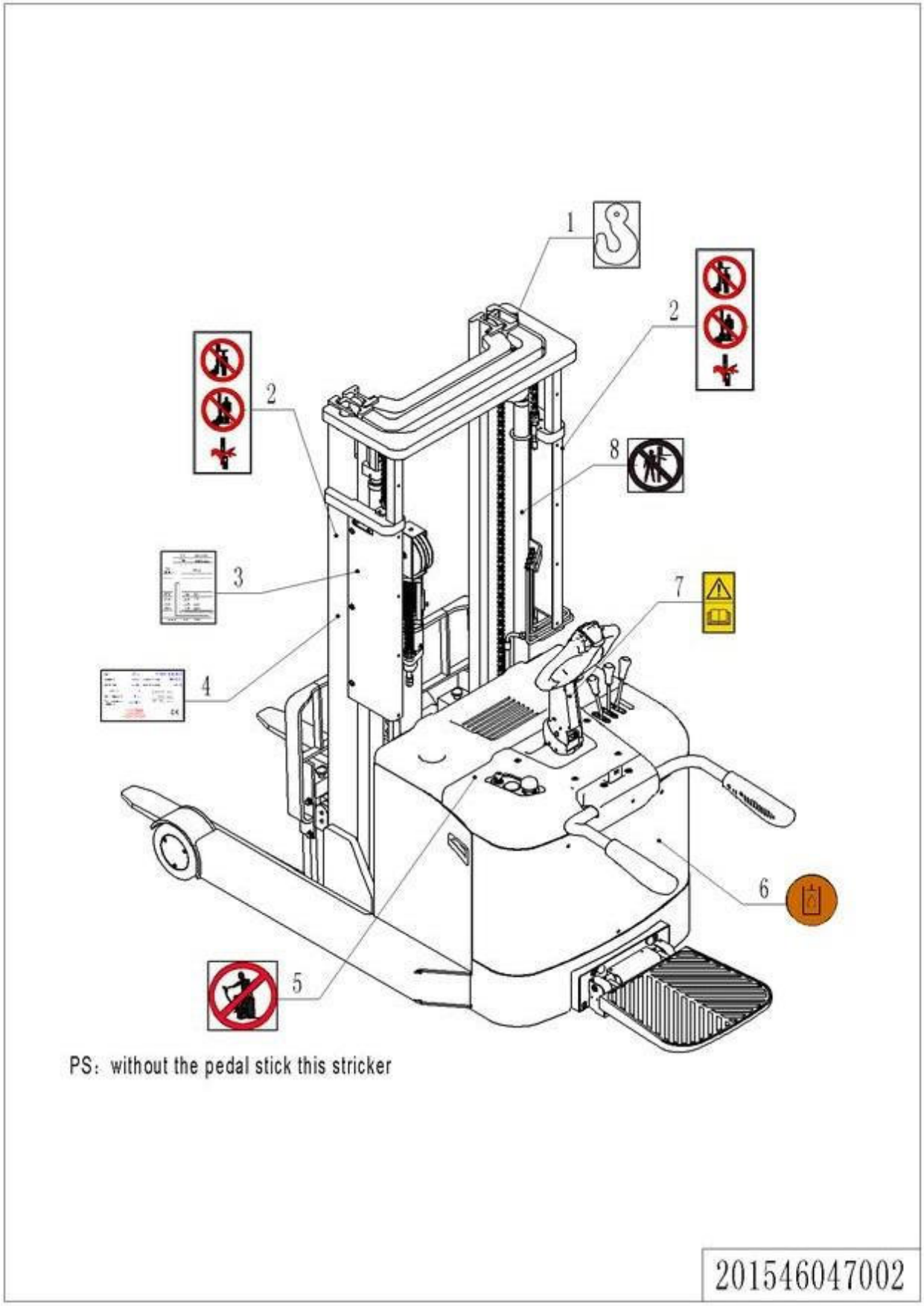

1= Supply as package. 2= Supply with constraints. 3= Phasing-out supply. 4= Supply as assembly. 5= Check other tables.

02 Labels and Decals-US (201546047001)

No.	Item Code	Mark	Item Description	Qty.	Substitute	Note
1	941200300001		Label	2		
2	941200100004		Label	2		
3	201547020000		Load Capacity Diagram	1		
4	201547020001		Truck data plate	1		
5	941200100011		Label	1		
6	941200300003		Label	1		
7	941200300002		Label	1		
8	941200100006		Label	1		

1= Supply as package. 2= Supply with constraints. 3= Phasing-out supply. 4= Supply as assembly. 5= Check other tables.

03 Battery Cover (201546021001)

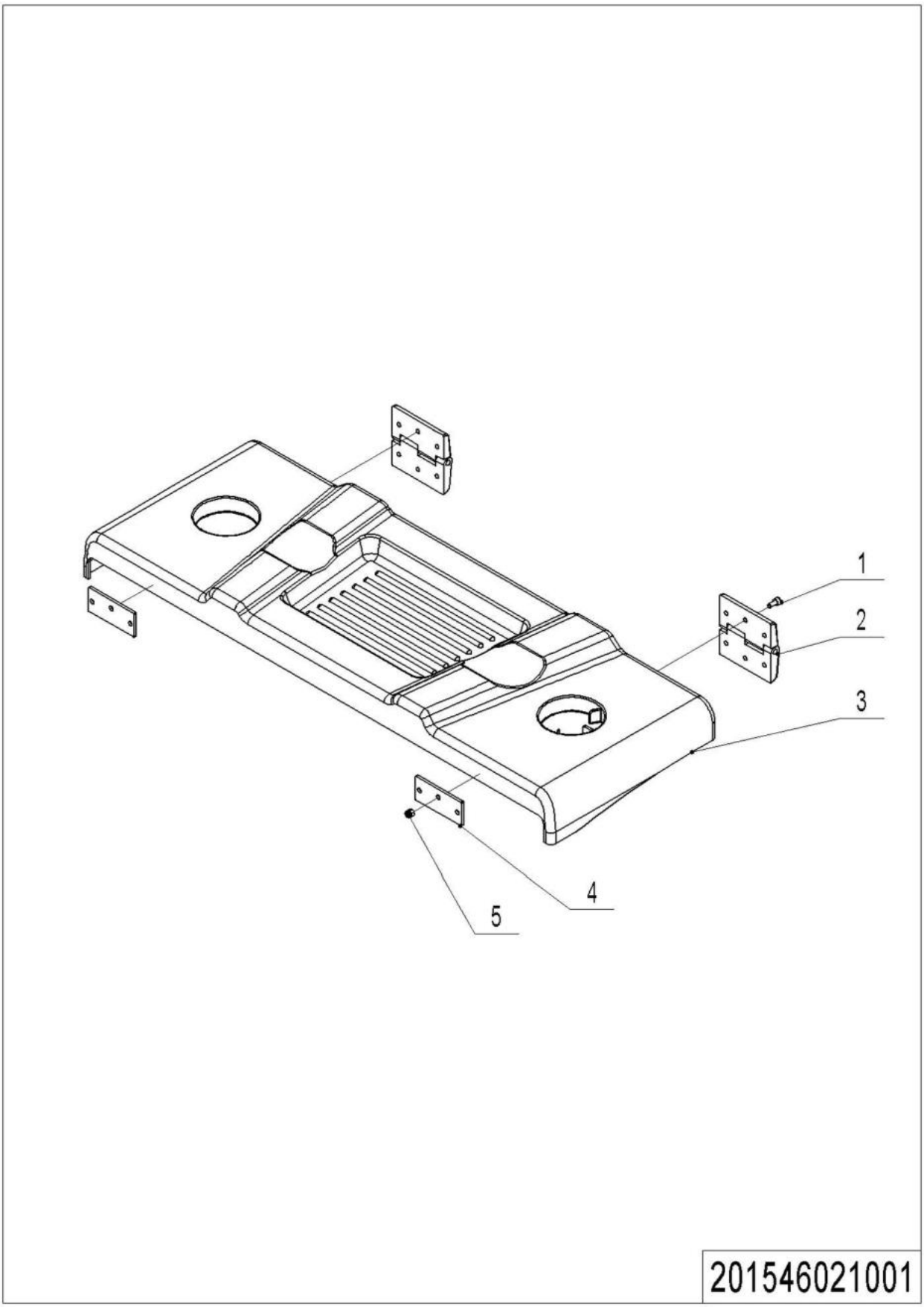

1= Supply as package. 2= Supply with constraints. 3= Phasing-out supply. 4= Supply as assembly. 5= Check other tables.

03 Battery Cover (201546021001)

No.	Item Code	Mark	Item Description	Qty.	Substitute	Note
1	910200200033	1	Screw	12		
2	940801300001		Hinge	2		
3	206021020002		Cell Cover	1		
4	201021020000		Mounting Plate	2		
5	910300500003	1	Nut	12		

1= Supply as package. 2= Supply with constraints. 3= Phasing-out supply. 4= Supply as assembly. 5= Check other tables.

Appendix

01 Electrical Circuit Diagram (KORDEL, Lead-acid Battery)

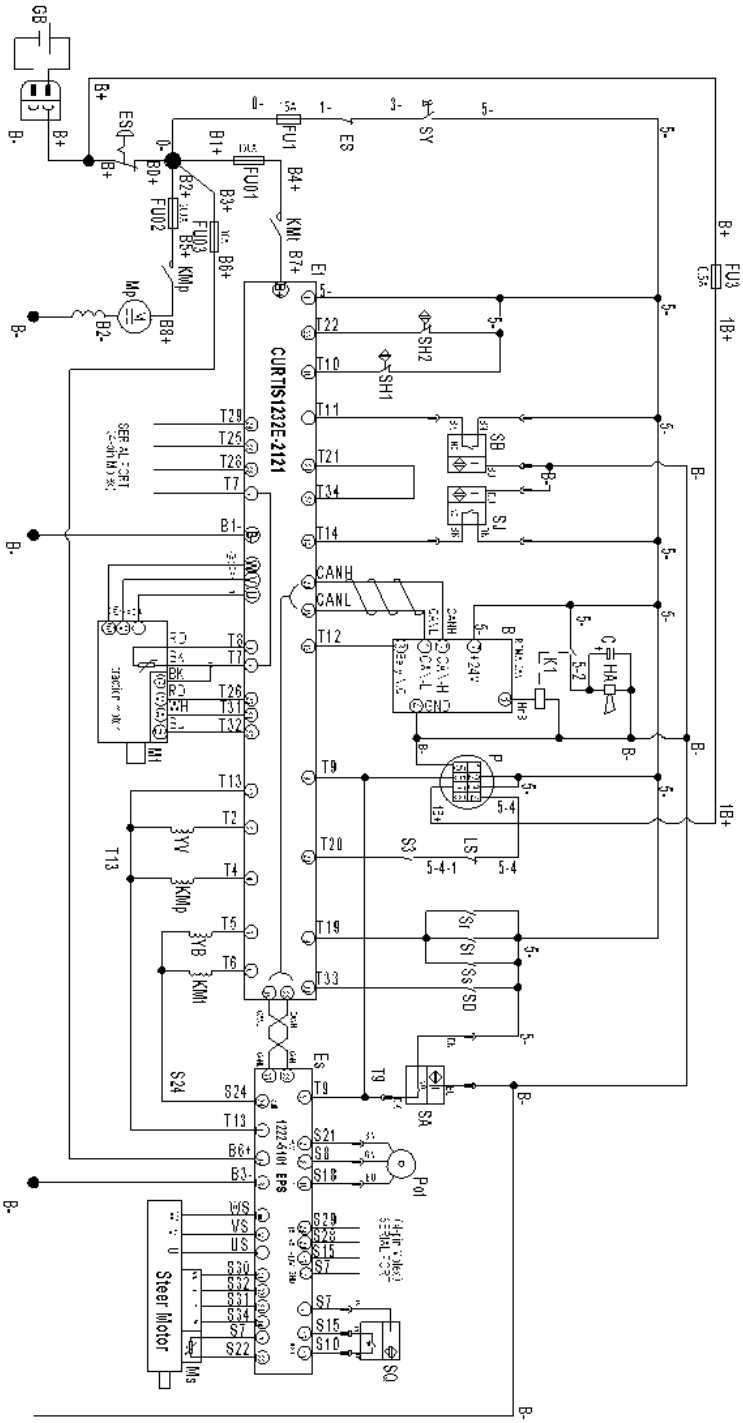

201546045501

1= Supply as package. 2= Supply with constraints. 3= Phasing-out supply. 4= Supply as assembly. 5= Check other tables.

02 Electrical Circuit Diagram (KORDEL, Lithium Battery)

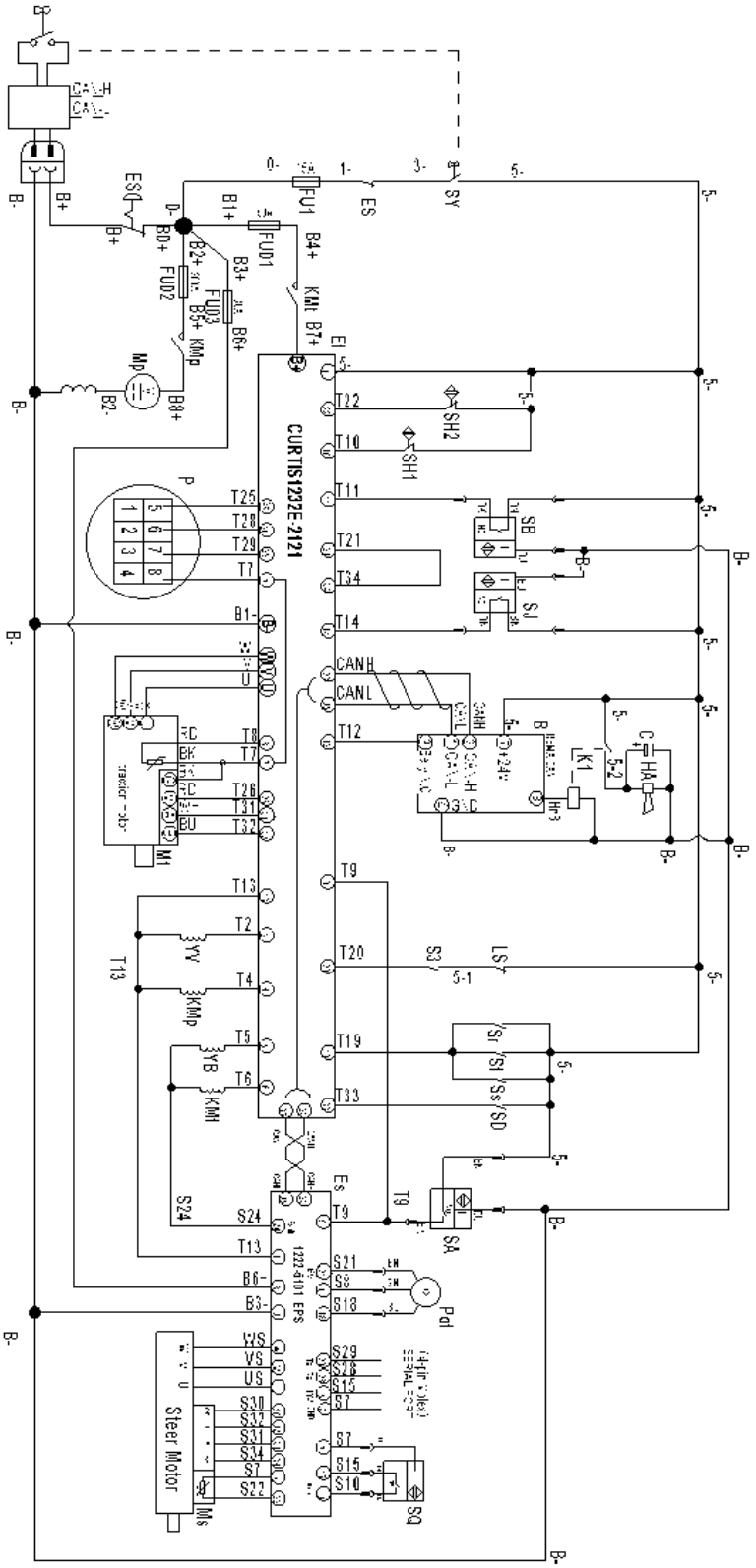

201546045502

1= Supply as package. 2= Supply with constraints. 3= Phasing-out supply. 4= Supply as assembly. 5= Check other tables.

03 Electrical Circuit Diagram (ZD, Lead-acid Battery)

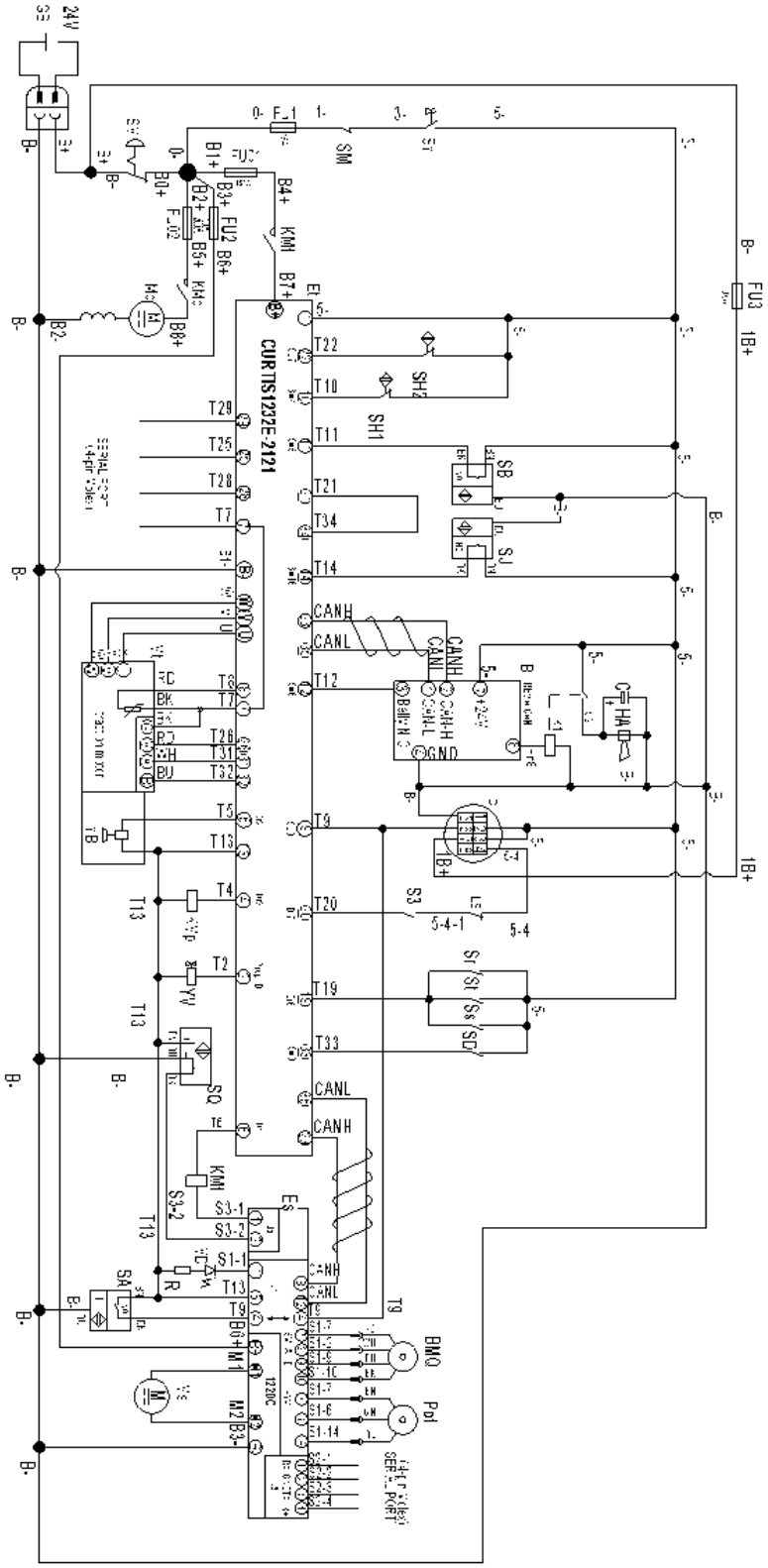

201546045503

1= Supply as package. 2= Supply with constraints. 3= Phasing-out supply. 4= Supply as assembly. 5= Check other tables.

04 Electrical Circuit Diagram (ZD, Lithium Battery)

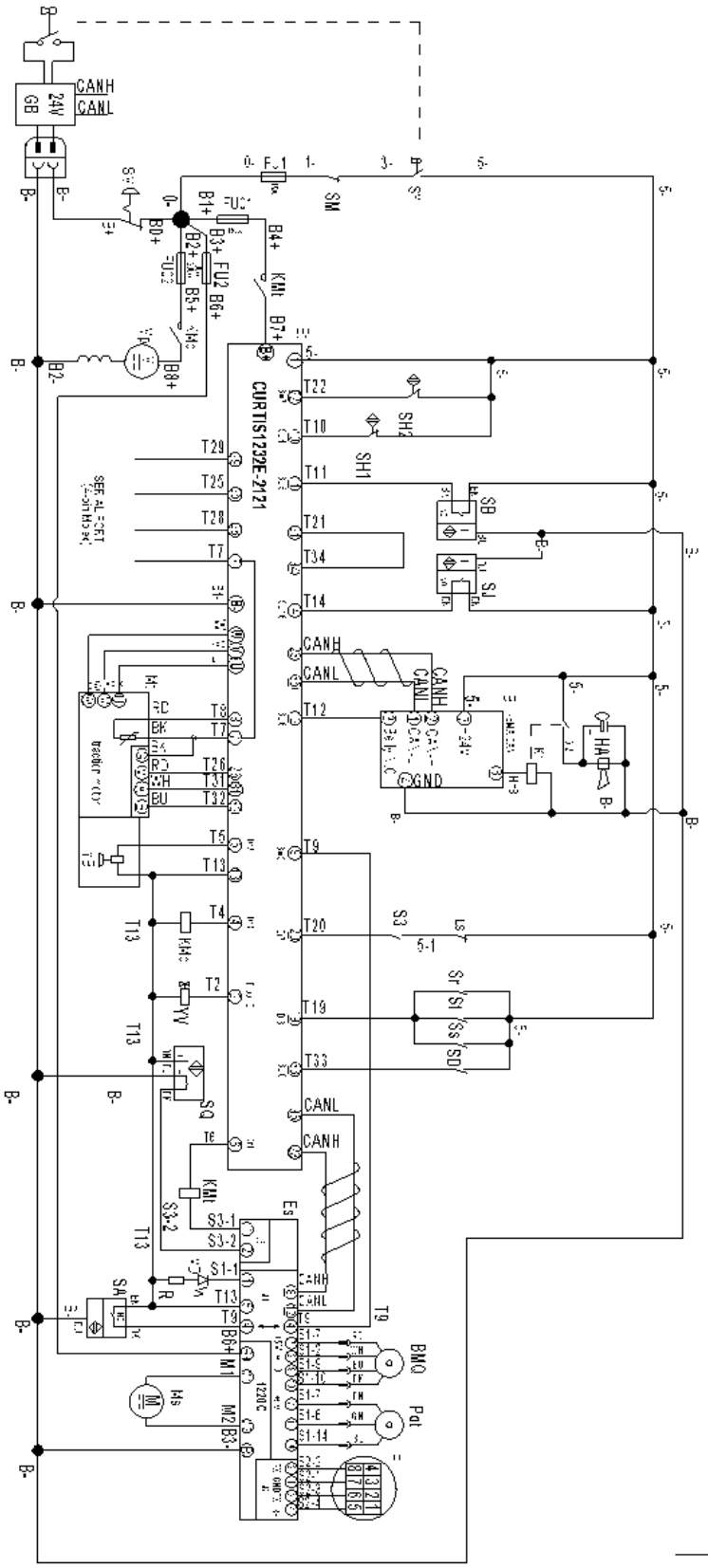

201546045504

1= Supply as package. 2= Supply with constraints. 3= Phasing-out supply. 4= Supply as assembly. 5= Check other tables.

05 Hydraulic Circuit Diagram

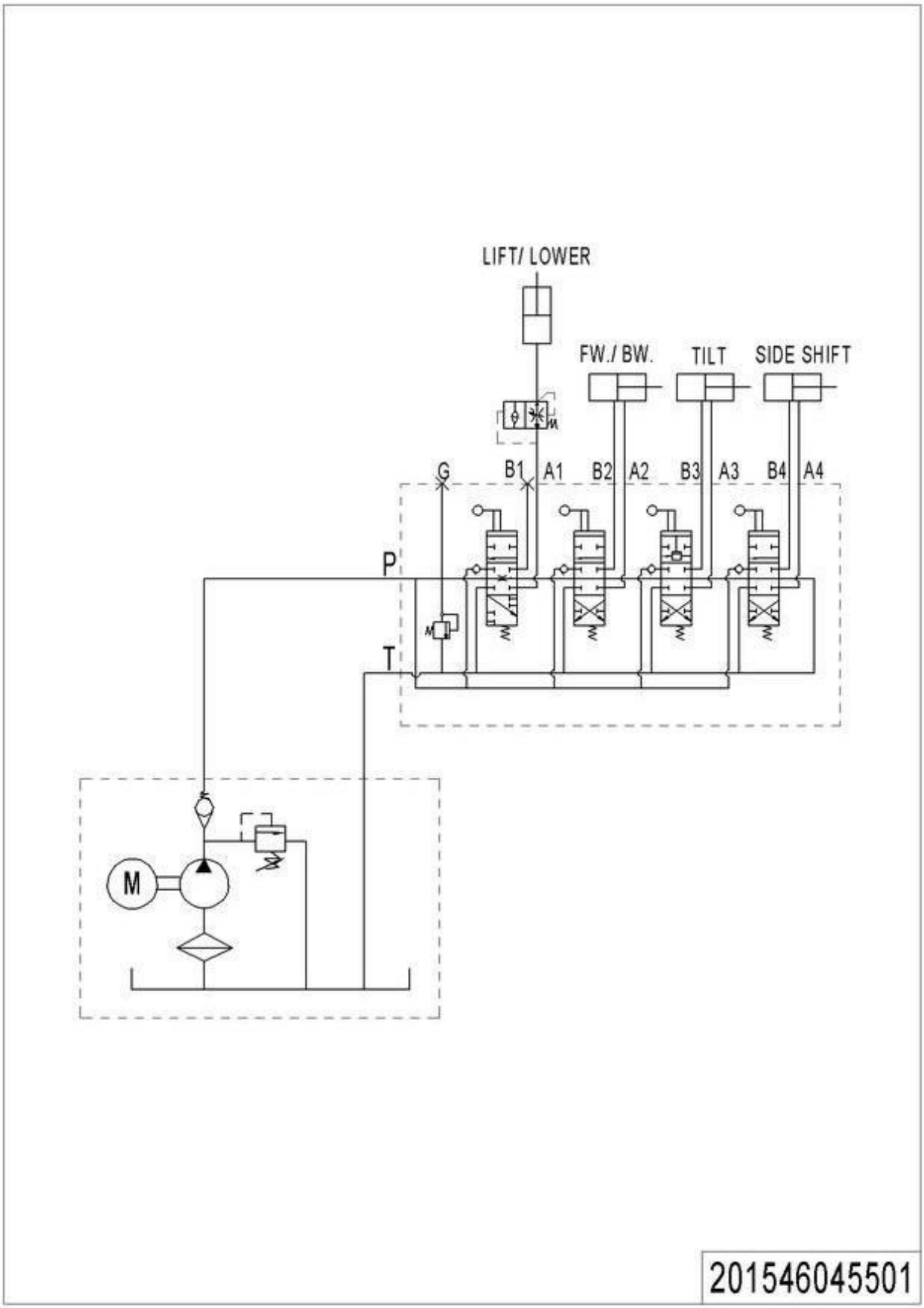

1= Supply as package. 2= Supply with constraints. 3= Phasing-out supply. 4= Supply as assembly. 5= Check other tables.

06 Consumable Parts List

No.	Item Code	Item Description	Qty.	Chapter/ Section/ Number
1	940200100011	Main Roller	4	Chapter1/01/18
2	201598510003	Seal Kit	2	Chapter2/05/4.01Chapter2/06/4.01
2	201598510003	Seal Kit		Chapter2/07/6.01Chapter2/08/8.01
3	201598510002	Seal Kit	1	Chapter2/03/17.01Chapter2/04/19.01
3	201598510002	Seal Kit		Chapter2/07/9.01Chapter2/08/11.01
4	201598510001	Seal Kit	1	Chapter2/01/2.01Chapter2/03/2.01
5	201598510004	Seal Kit	1	Chapter2/03/10.01Chapter2/04/14.01
5	201598510004	Seal Kit		Chapter2/05/2.01Chapter2/06/2.01
5	201598510004	Seal Kit		Chapter2/07/16.01Chapter2/08/18.01
6	940500400002	Bearing	4	Chapter4/06/11Chapter4/07/11
6	940500400002	Bearing		Chapter4/08/11
7	940200100006	Main Roller	4	Chapter4/01/25Chapter4/05/26
8	940200200007	Side Roller	2	Chapter4/01/23.03Chapter4/05/24.05
9	940200500001	Sprocket Bearing	2	Chapter4/02/2Chapter4/04/2
10	910700200025	Bearing	4	Chapter5/05/1
11	940300300025	WheelΦ230x100	2	Chapter5/05/2
12	910700200019	Bearing	4	Chapter5/04/11.01
13	940300300019	WheelΦ124x60	2	Chapter5/04/11.02
14	532616520003	Bushing	2	Chapter5/04/9
15	532616520001	Check Ring	2	Chapter5/04/4
16	910700400004	Bearing	4	Chapter5/04/3
17	940500200002	Bushing	2	Chapter5/01/8
18	940400100003	Air Spring	1	Chapter5/01/13
19	920400100007	Connector	1	Chapter6/06/2
20	920400100017	Connector	1	Chapter6/07/2
21	940400100006	Air Spring	1	Chapter7/02/4
22	940400100039	Air Spring	1	Chapter7/03/6
23	505617510005	Leaf Spring	1	Chapter7/02/7
24	940500200008	Bushing	4	Chapter7/03/3
25	505698510002	Buffer Kits	2	Chapter7/03/24
26	940801300001	Hinge	2	Chapter8/03/2

1= Supply as package. 2= Supply with constraints. 3= Phasing-out supply. 4= Supply as assembly. 5= Check other tables.