NOBLELIFT

Scan it,
For more information

Service Hotline: 4008-836115

INSTRUCTION HANDBOOK

Electric Stacker

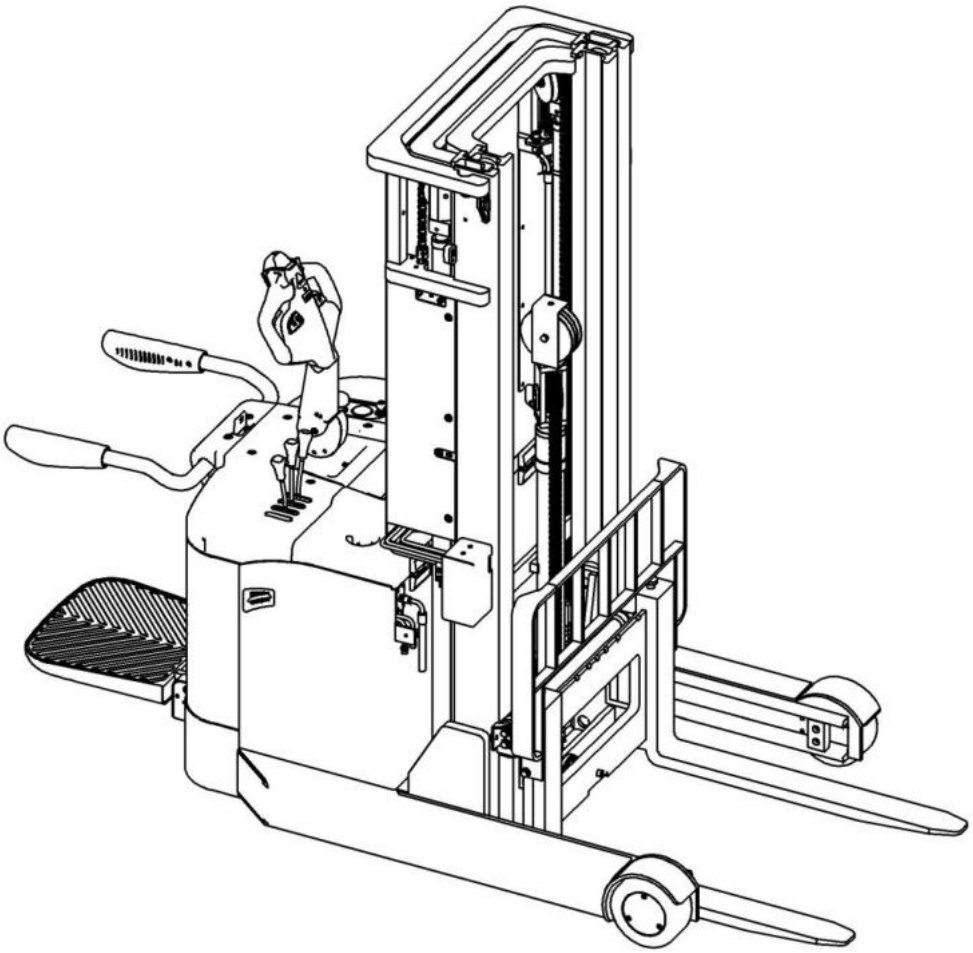

WARNING

Do not use the electric truck before reading and understanding these operating instructions.

NOTE:

- **Please check the designation of your present type at the last page of this document as well as on the ID-plate.**
- **Keep for future reference.**

Version 02/2023

PS13RMPLUS-SMS-004-EN

FOREWORD

Before operating the electric stacker, read this ORIGINAL INSTRUCTION HANDBOOK carefully and understand the usage of the truck completely. Improper operation could create danger.
This handbook describes the usage of different electric stackers. When operating and servicing the truck, make sure, that it applies to your type.

Chapter 11 describes specialized stipulations and regulations for the American market. Follow these instructions and stipulations if you operate the truck within the American market!

Keep this handbook for future reference. If this or the warning/ caution labels are damaged or got lost, please contact your local dealer for replacement.

This truck complies with the requirements according to EN 3691-1 (Industrial trucks- safety requirements and verification, part 1), EN 12895 (Industrial trucks- electromagnetic compatibility), EN 12053 (Safety of industrial trucks- test methods for measuring noise emissions), EN 1175 (Industrial truck safety – electrical requirements), assumed the truck is used according to the described purpose.
The noise level for this machine is 67 dB(A) according to EN 12053.
The vibration is 0.87m/s2 according to EN 13059.

ATTENTION:

- Environmentally hazardous waste, such as batteries, oil and electronics, will have a negative effect on the environment, or health, if handled incorrectly.
- The waste packages should be sorted and put into solid dustbins according to the materials and be collected disposal by local special environment protection bureau. To avoid pollution, it’s forbidden to throw away the wastes randomly.
- To avoid leaking during the use of the products, the user should prepare some absorbable materials (scraps of wooden or dry duster cloth) to absorb the leaking oil in time. To avoid second pollution to the environment, the used absorbable materials should be handed in to special departments in terms of local authorities.
- Our products are subject to ongoing developments. Because this handbook is only for the purpose of operating /servicing the stacker, therefore please have understanding, that there is no guarantee out of particular features out of this handbook.

NOTE: On this manual, the left sign means warning and danger, which can lead to death or serious injury if not followed.

Copyright

The copyright remains with the company, mentioned on the CE- certificate at the end of this document or, if sold within the USA, with the company, mentioned on the company sticker.

TABLE OF CONTENTS

1. CORRECT APPLICATION 5
2. DESCRIPTION OF THE STACKER 6
   a. Overview of the main components 6
   b. Main technical data 7
   c. Description of the safety devices and warning labels (Europe and other, excepting USA) 10
   d. Identification plate 11
3. WARNINGS, RESIDUAL RISK AND SAFETY INSTRUCTIONS 11
4. COMMISSIONING, TRANSPORTING, DECOMMISSIONING 12
   a. Commissioning 12
   b. Lifting/ transportation 12
   c. Decommissioning 13
5. DAILY INSPECTION 13
6. OPERATING INSTRUCTIONS 14
   a. Parking 14
   b. Residual lift diagram 15
   c. Lifting 15
   d. Lowering 15
   e. Moving forks 15
   f. Fork tilting 15
   g. Travelling 15
   h. Steering 17
   i. Braking 17
   j. Malfunctions 17
   k. Emergency 17
7. BATTERY CHARGING AND REPLACEMENT 17
   a. Replacement 18
   b. Battery Indicator 18
   c. Charging 19
8. REGULAR MAINTENANCE 19
   a. Maintenance checklist 20
   b. Lubricating points 21
   c. Check and refill hydraulic oil 21
   d. Checking electrical fuses 22
   e. Removing, reattaching guarding 22
9. TROUBLE SHOOTING 22
10. WIRING/ CIRCUIT DIAGRAM 24
   a. Electrical circuit diagram 24
   b. Hydraulic circuit 26

11. SPECIALIZED STIPULATIONS FOR THE US- AMERICAN MARKET 27
a. Foreword/ Compliance 27
b. Description warning labels (only US- market) 28
c. Technical data for US market 31
12. DECLARATION OF CONFORMITY (valid, if sold within the EU) 34

1. CORRECT APPLICATION

It is only allowed to use this electric stacker according to this instruction handbook.

The trucks described in this handbook are self propelled pedestrian controlled electric power stacker, with electrically powered lifting function. The trucks are designed for stacking operations in dedicated racking by lifting and lowering the palletized load up to the desired lifting height.

A wrong usage can cause human injuries or can damage equipment.
The operator/ the operating company has to ensure the correct usage and has to ensure, that this truck is used only by staff, which is trained and authorized to use this truck.

The truck has to be used on substantially firm, smooth, prepared, level and adequate surfaces. The truck is intended to be used for indoor applications with ambient temperatures between +5°C and + 40°C and for intensive operations without crossing permanent obstacles or potholes. Operating on ramps is not allowed. While operating, the load must be placed approximately on the longitudinal centre plane of the stacker.
Lifting or transporting people is forbidden. If travelling the load must be lowered to the lifting point.

It is not allowed to use this truck on tail lifts or loading ramps.

The capacity is marked on the load diagram as well on the Identification plate. The operator has to consider the warnings and safety instructions.
Operating lighting must be minimum 50 Lux.

<u>Modification</u>
No modifications or alterations to this truck which may affect, for example, capacity, stability or safety requirements of the truck, shall be made without the prior written approval of the original truck manufacturer, its authorized representative, or a successor thereof. This includes changes affecting, for example braking, steering, visibility and the addition of removable attachments. When the manufacturer or its successor approve a modification or alteration, they shall also make and approve appropriate changes to capacity plate, decals, tags and operation and maintenance handbooks.

By not observing these instructions, the warranty becomes void.

2. DESCRIPTION OF THE STACKER

a. Overview of the main components

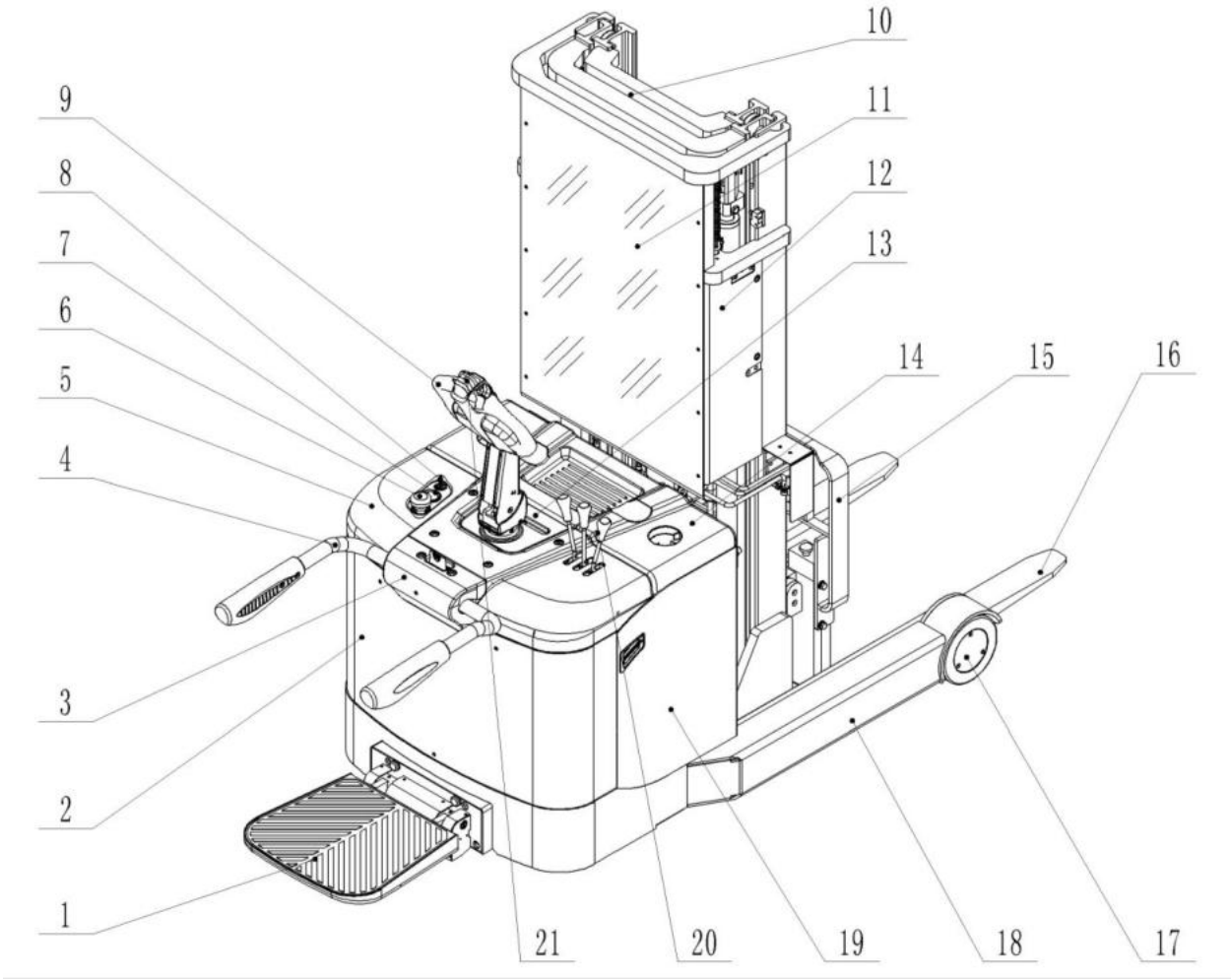

Fig. 1: Overview main components

1. Platform
2. Main cover
3. Protective arm cover
4. Protective arm
5. Upper cover
6. Emergency button
7. Discharge indicator and charging indicating LED
8. Key switch
9. Tiller
10. Mast
11. Protective screen
12. Protective board
13. Middle cover
14. Battery cover
15. Load backrest
16. Fork
17. Load roller
18. Chassis
19. Apron
20. Tiller control lever
21. Belly button

b. Main technical data

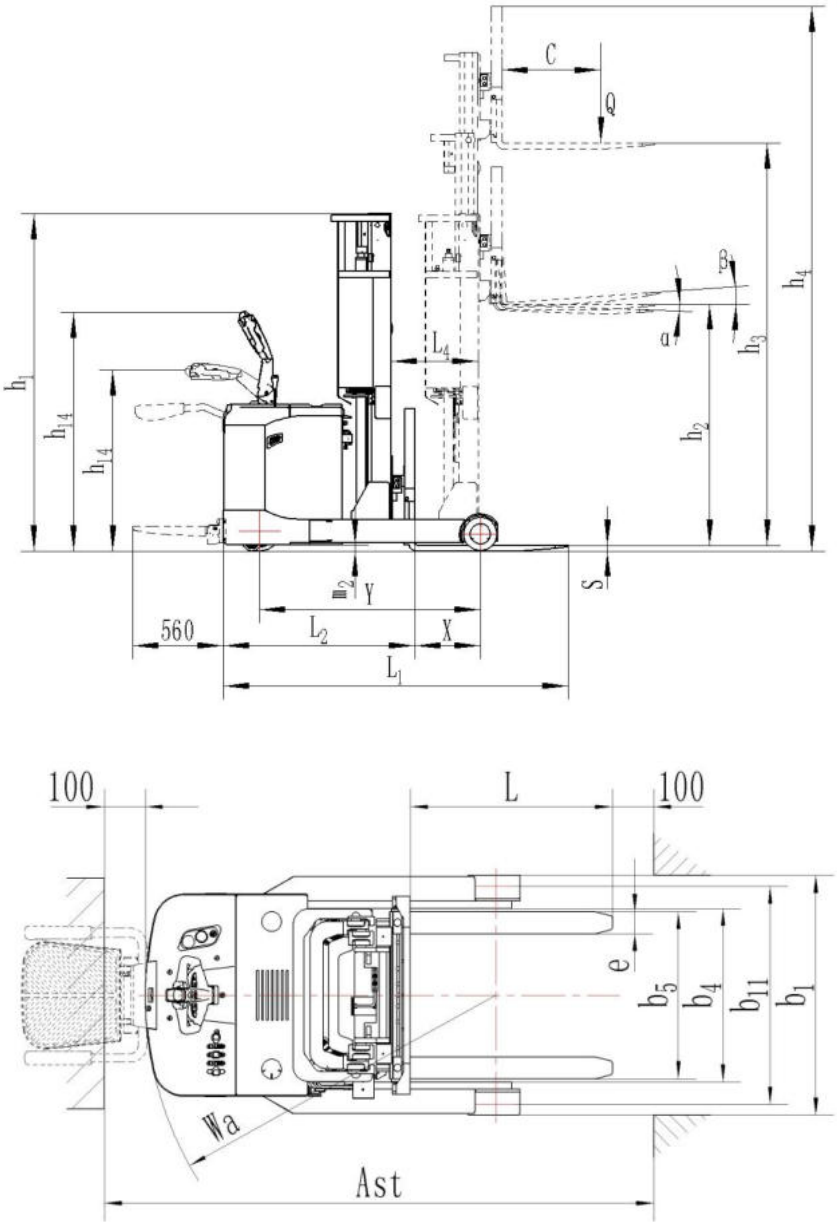

Fig. 2: Technical data

Table1: Main technical data for standard version

Technical data sheet for industrial truck acc. to VDI 2198						
Distinguishing mark	1.2	Manufacturer`s type designation		PS13RM16PLUS	PS13RM30PLUS	PS13RM48PLUS
	1.3	Power(battery ,diesel, petrol gas,manual)		Battery		
	1.4	Operator type		Pedestrian		
	1.5	Load Capacity / rated load	Q（kg）	1300		

	1.6	Load centre distance	C（mm）	600		
	1.8	Load distance ,centre of drive axle to fork	X（mm）	415		
	1.9	Wheelbase	Y（mm）	1350		
Weight	2.1	Service weight	kg	1750	1900	2200
Tires, Chassis	3.1	Tires		Polyurethane (PU)		
	3.2	Tire size, front	mm	∅250 ×82		
	3.3	Tire size, rear	mm	∅210×85		
	3.4	Steering wheel size	mm	∅124×60		
	3.5	Wheels, number front/rear(x=driven wheels)		1x+2/2		
	3.6	Tread, front	b_{10}(mm)	680		
	3.7	Tread, rear	b_{11}(mm) mm	1085		
Dimensions	4.1	Tilt of mast/fork carriage forward/backward	α / β (°)	2/4		
	4.2	Lowered mast height	h_1(mm)	2196	2096	2196
	4.3	Free Lift height	h_2(mm)	1600	—	1600
	4.4	Lift	h_3(mm)	1600	3000	4800
	4.5	Extended mast height	h_4(mm)	2485	3885	5685
	4.9	Height of tiller in drive position min./ max.	h_{14}(mm)	1030/1415		
	4.15	Height, lowered	h_{13}(mm)	50		
	4.19	Overall length	l_1(mm)	2080[1)]		
	4.20	Length to face of forks	l_2(mm)	1160[1)]		
	4.21	Overall width	b_1(mm)	1180		
	4.22	Fork dimensions	s/e/l (mm)	35/100/920(1070)		
	4.25	Width across forks	b_5(mm)	220-760		
	4.26	Distance between supporting arm and load side	b_4(mm)	880		

	4.28	Reach distance	l_4(mm)	545	
	4.32	Ground clearance, centre of wheelbase	m_2(mm)	40	
	4.33	Aisle width for pallets 1000X1200 crossways	Ast(mm)	2600[1)]	
	4.34	Aisle width for pallets 800X1200 lengthways	Ast(mm)	2650[1)]	
	4.35	Turning radius	Wa(mm)	1570[1)]	
Performance data	5.1	Travel speed, laden/ unladen	km/h	5.5/6.0-8.0/8.0	
	5.2	Lift speed, laden/ unladen	m/s	0.085/0.122	0.11/0.165
	5.3	Lowering speed, laden/ unladen	m/s	0.125/0.08	0.11/0.10
	5.8	Max. gradeability, laden/ unladen	%	5/8	
	5.10	Service brake		Electromagnetic	
Electric- motor	6.1	Drive motor rating	kW	2.6	
	6.2	Lift motor rating	kW	2.2	3.0
	6.3	Battery acc. to DIN 43531/ 35/ 36 A, B, C, no		3PzS	4PzS
	6.4	Battery voltage, nominal capacity	V/Ah	24 / 270	24 / 400
Addition al data	8.1	Type of drive control		AC-Speed Control	
	8.4	Sound level at driver`s ear acc.to EN 12053	dB(A)	67	

1) with foldable platform the following dimensions increase: l_1, l_2 =+100,Wa/Ast=+100。

c. Description of the safety devices and warning labels (Europe and other, excepting USA)

For the USA –market, the description of the safety and warning labels is mentioned in chapter

A. Crane hook label
B. Warning decal: Do not step under or on the forks
C. Residual lift capacity sticker
D. Never reach through
E. Identification plate (ID-plate)
F. Sticker to read and follow these instructions
G. 'No passengers' decal
J. Sign oil filling point

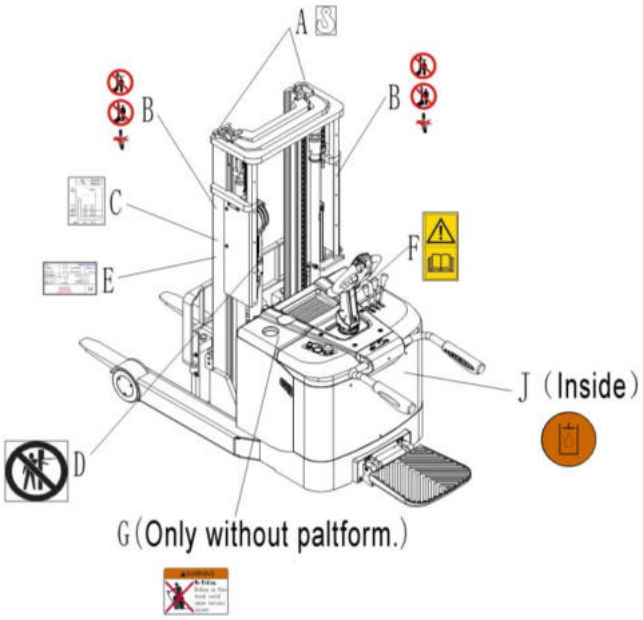

Fig.3: Safety and warning labels

The truck has an emergency button (6) which stops all lifting-, lowering-, driving- functions and engages the failsafe electromagnetic brake when it is pushed. By pulling this button, the truck can be operated after the controller checked the functions. Before operating, insert the key and turn the switch (8) clockwise. To prevent against unauthorized access, turn the key anti-clockwise and remove it, if you not operate this truck. The truck is equipped with a safety (belly) button (21) which switches the driving function away from the operator, if the truck travels towards the operator and the tiller is activated in the tillers operating zone. Follow also the instructions given on the decals. Replace the decals if they are damaged or missing.

d. Identification plate

1 Designation, type
2 Serial number
3 Rated capacity in kg
4 Supply voltage in V
5 Own mass (self weight) in kg without battery
6 Name and address of manufacturer)
7 Battery weight minimum/ maximum
8 Nominal power in kW
9 Load center distance
10 Manufacturing data
11 Option

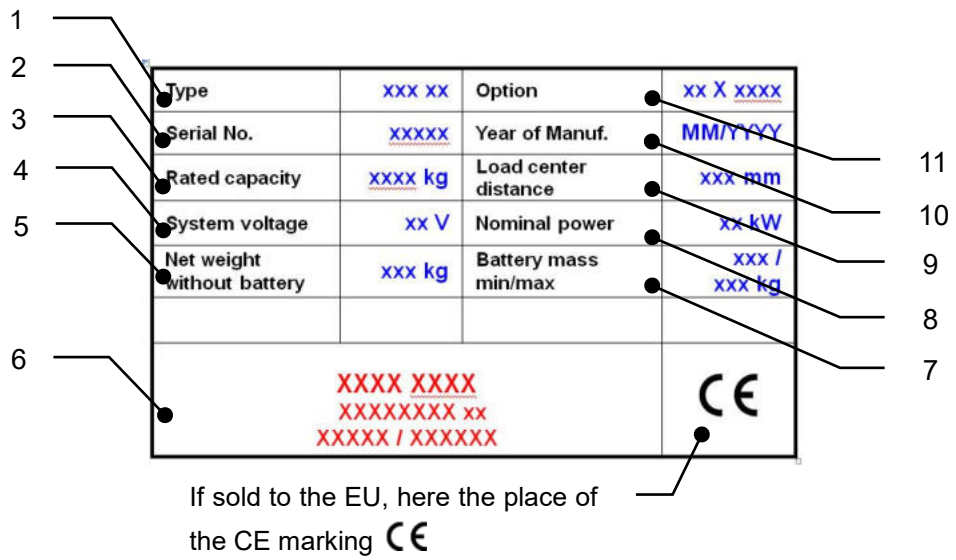

Fig. 4: Identification plate

3. WARNINGS, RESIDUAL RISK AND SAFETY INSTRUCTIONS

DO NOT

- Drive outside the stacking operation with a lifted load higher than the lifting point.
- Put foot or hand under or into the lifting mechanism.
- Allow other person than the operator to stand in front of or behind the truck when it is moving or lifting/lowering.
- Overload the truck.
- Put foot in front of the wheels, injury could result.
- Lift people. People could fall down and suffer severe injury.
- Push or pull loads.
- Use this truck on ramps.
- Use the truck without a removed protective screen (fig.1, pos. 19/ guarding).
- Side or end load. Load must be distributed evenly on the forks.
- Use the truck with unstable, unbalanced not stable load.
- Use truck without manufacturer's written consent.
- Lifted loads could become unstable at wind forces. In the case of wind forces do not lift the load if there is any influence to the stability

Watch difference in floor levels when driving. Load could fall down or the truck could get uncontrollable. Keep watching the condition of load. Stop operating the truck if load becomes unstable. Brake the truck and activate the emergency button (6) by pushing when sliding load on or off the truck. If the truck has any malfunctions, follow chapter 8.
Practice maintenance work according to regular inspection. This truck is not designed to be water resistant. Use the truck under dry condition. Prolonged continuous operation might cause damage of the power pack. Stop operation if temperature of hydraulic oil is too high.

- When operating the truck, the operator has to wear safety shoes.
- The truck is intended to be used for indoor applications with ambient temperatures between +5°C and + 40°C.
- The operating lighting must be minimum 50 Lux.
- It is not allowed to use the truck on ramps.
- To prevent unintended sudden movements when not operating the truck (i.e. from another person, etc.) switch off the truck and remove the key.

4. COMMISSIONING, TRANSPORTING, DECOMMISSIONING

a. Commissioning

Table 2: Commissioning data

Type	PS13RM48PLUS	PS13RM30PLUS	PS13RM16PLUS
Commissioning weight [kg]	2250	1950	1800
Version/ Lift [mm]	4800	3000	1600
Dimensions [mm]	2200x1300x2300	2200x1300x2200	2200x1300x2300

After receiving our new truck or for re-commissioning you have to do following before (firstly) operating the truck:
Check if are all parts included and not damaged

- Eventually installation and charging the batteries (follow chapter 7)
- Do the work according to the daily inspections as well as functional checks.

b. Lifting/ transportation

For transporting, remove the load, lower the forks to the lowest position and fix the truck safe with dedicated lifting gear according to the following figures.

Lifting

USE DEDICATED CRANE AND LIFTING EQUIPMENT
DO NOT STAND UNDER THE SWAYING LOAD
DO NOT WALK INTO THE HAZARDOUS AREA DURING

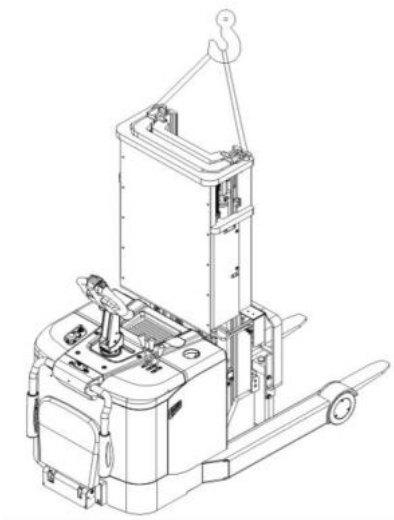

Fig.5: Lifting with a crane

LIFTING

Park the truck securely and lash the truck according to the points identified in fig. 5
Lift the truck to its destination and place the truck securely before removing the lifting gear.

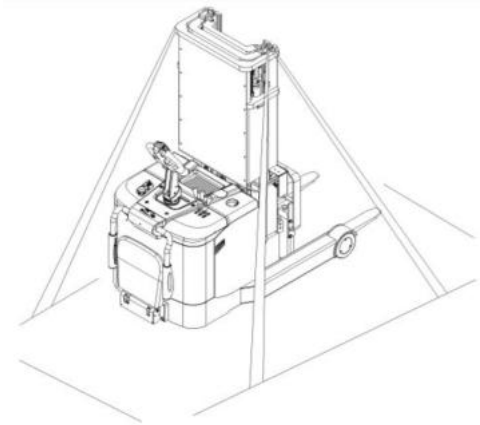

Fig. 6: Fixing points

Transportation

DURING TRANSPORTATION ON A LORRY OR TRUCK ALWAYS FASTEN THE TRUCK SECURELY

Lower the forks and park the truck securely.
Fasten the truck according to fig.6 by fixing dedicated lashing belts to each side of the truck's crane hook holes and fasten the other side at the transporting truck.

c. Decommissioning

For storage, remove the load, lower the truck to the lowest position, grease all in this handbook mentioned greasing points (regular inspection), eventual protect the truck against corrosion and dust. Remove the batteries and jack the truck safely, so that there will be no flattening after storage.
For final decommissioning hand the truck to a designated recycling company. Oil, batteries and electric components must be recycled due to legal regulations.

5. DAILY INSPECTION

This chapter describes pre-shift checks before putting the truck into operation.
Daily inspection is effective to find the malfunction or fault on this truck. Check the truck on the following points before operation.

Remove load from truck and lower the forks.
DO NOT USE THE TRUCK IF ANY MALFUNCTION IS FOUND.

- Check for scratches, deformation or cracks.
- Check if there is any oil leakage from the cylinder.
- Check the vertical creep of the truck.
- Check the chain and rollers for damages or corrosion.
- Check the smooth movement of the wheels.
- Check the function of the emergency brake by activating the emergency button.
- Check, the tiller arm- switch braking function
- Check the lifting and lowering functions by operating the buttons.
- Check if the protective screen has no damages and that is correctly assembled.
- Check the audio warning signal.
- Check if all bolts and nuts are tightened firmly.
- Check the function of the key switch.

- Check the speed limitation switch.
- Visual check if there are any broken hoses or broken electric wires.
- If supplied with a backrest extension, check it for damages and correct assembling.

6. OPERATING INSTRUCTIONS

BEFORE OPERATING THIS TRUCK, PLEASE FOLLOW THE WARNINGS AND SAFETY INSTRUCTIONS (CHAPTER 3).
BEFORE OPERATING THIS TRUCK, ENSURE THAT THE LOAD OR OTHER EQUIPMENT NOT CAUSES INSUFFICIENT VISIBILITY!

Make sure, that the load is palletized and stable and that the daily inspection is carried out. For starting, insert the key and turn it clockwise to the “ON”- position. Eventually before inserting the key, the emergency button must be pulled carefully.

Press the horn button (24) to activate the audible warning signal.

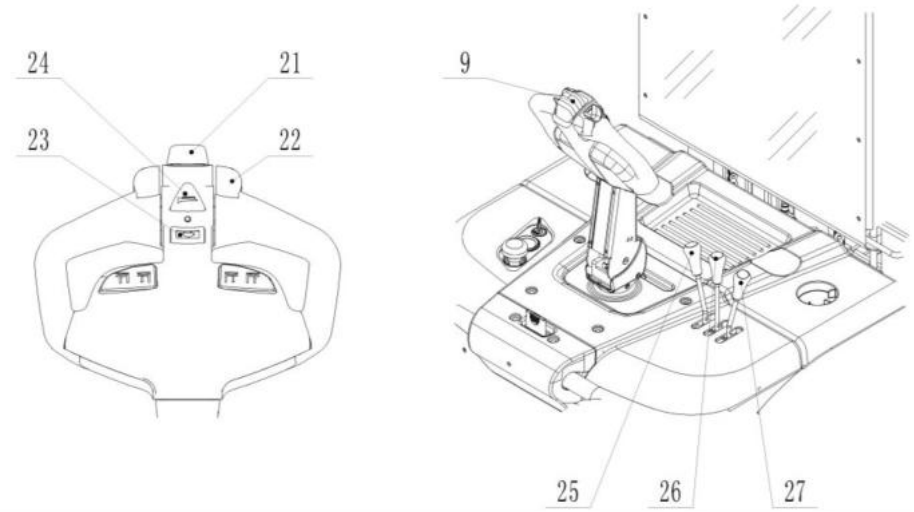

Fig.7: Tiller operating controls

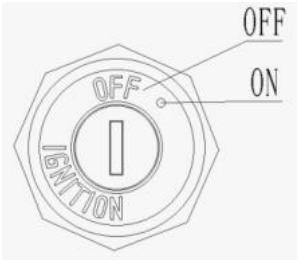

Fig.8: Key switch

a. Parking

DO NOT PARK THE TRUCK ON INCLINED SURFACES

The truck is equipped with an electromagnetic failsafe stopping and parking brake.
Always lower the forks fully and drive the truck to a safe area. Turn the key anti- clockwise to the “Off” – position and remove the key.

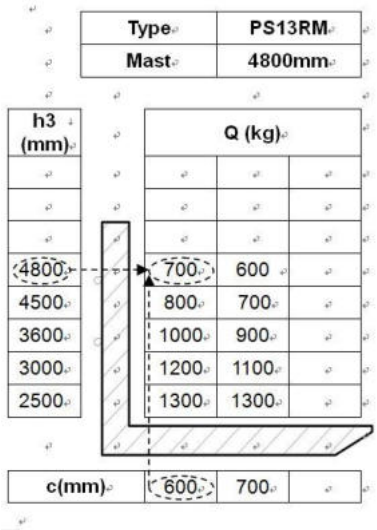

Type	PS13RM
Mast	4800mm

h3 (mm)	Q (kg)		
4800	700	600	
4500	800	700	
3600	1000	900	
3000	1200	1100	
2500	1300	1300	
c(mm)	600	700	

Fig. 9: Residual lift diagram

b. Residual lift diagram

The residual lift diagram indicates the maximum capacity Q [kg] for a given load centre c [mm] and the corresponding lift height H [mm] for the truck with horizontal load.
The white markings on the mast indicate if the specific lifting limits reached.
For instance with a load centre of gravity distance c of 600 mm and a maximum lift height H of 4800 mm, the max. capacity Q is 700 kg.

c. Lifting

DO NOT OVERLOAD THE TRUCK! THE MAXIMUM CAPACITY IS 1300 kg WHEN THE LOAD CENTER IS 600MM.
LIFT ONLY CAPACITIES ACCORDING TO THE RESIDUAL LIFT DIAGRAM.

Travel with the lowered forks fully underneath the pallet and move the lifting cam towards you until you reached the desired lifting height. The lifting speed can be adjusted by the movement of the cam.

d. Lowering

If the forks are in the racking, firstly travel out of the racking carefully with or without the pallet. By travelling out of the racking, take care that the forks are not touching the racking.
Move the lever (fig. 7, 25) forwards. The lowering speed can be adjusted by the movement of the lever.
Lower the load until the forks are clear of the pallet, then drive the truck carefully out of the load unit.

e. Moving forks

Move the lever (26) forwards, the reach pantograph moves out of the truck.
Move the lever (26) backwards, the reach pantograph moves back into the truck.

f. Fork tilting

Move the lever (27) forwards, the forks moving upwards.
Move the lever (27) backwards, the forks moving downside.

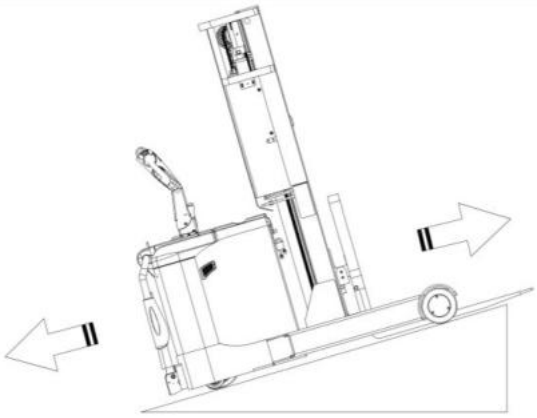

Fig.10: Load facing uphill

g. Travelling

TRAVEL ON INCLINES ONLY WITH THE LOAD FACING UPHILL.
DO NOT TRAVEL ON INCLINES MORE THAN SPECIFIED WITH THE TECHNICAL DATA.
TRAVELLING IS ONLY ALLOWED IF THE FORKS ARE LOWERED DOWN TO THE LIFTING POINT (<500MM).

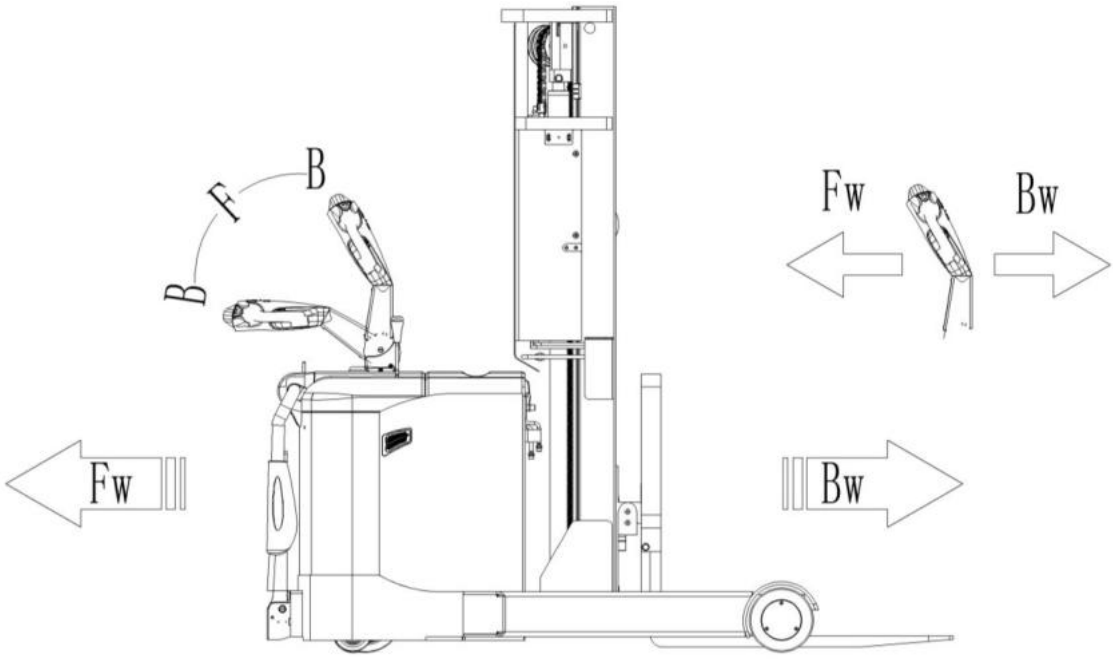

Fig.11: Operating direction

After starting the truck by turning the inserted key to the “ON”- position (fig. 8); and eventually by pulling the emergency button carefully, move the tiller to the operating zone (‘F’, fig.11).
Turn the accelerator button to the desired direction forward ‘Fw.’ Or backwards ‘Bw.’(fig. 11).
Control the travelling speed by moving the accelerator button (22) carefully until you reached the desired speed.
If you move the accelerator button back to the neutral position, the controller decelerates the truck until the truck stops. If the truck stopped, the parking brake will be engaged.
Drive carefully the truck to the destination. Watch the route conditions and adjust the travelling speed with the accelerator button.

THE TRUCK CAN BE EQUIPPED OPTIONAL WITH A FOLDABLE PLATFORM AND SIDEWAYS PROTECTIVE ARMS.
PAY ATTENTION, THE BEHAVIOR FOR THE RIDE ON MODE IS DIFFERENT TO THE PEDESTRIAN MODE.

Besides the pedestrian mode, following travelling modes can be used:

- Travelling with platform (1) folded downside and sideways arms (4) in protective position
  Travelling with maximum speed.
- Travelling with platform (1) folded downside and sideways arms (4) folded downside
  Depending on the Controllers parameter setting, the speed might be lower, but not higher than 6km/h.
- Travelling with platform (1) folded upright and sideways arms (4) folded downside
  Depending on the Controllers parameter setting, the speed might be lower, but not higher than 6km/h.

h. Steering

THE TRUCK IS EQUIPPED WITH AN ELECTRIC STEERING SYSTEM. TAKE CARE BY OPERATING A TRUCK WITH THIS KIND OF SYSTEM; THE BEHAVIOR OF THE TRUCK MIGHT BE DIFFERENT THAN TO A TRUCK WITHOUT ELECTRIC STEERING SYSTEM.

You steer the truck by moving the tiller to the left or right side.

i. Braking

THE BRAKING PERFORMANCE DEPENDS ON THE TRACK CONDITONS AND THE LOAD CONDITONS OF THE TRUCK

The braking function can be activated on several ways:

- By moving the accelerator button (22) back to the initial '0' position or by releasing the button, the regenerative braking is activated. The truck brakes until it stops.
- By moving the accelerator button (22) from one driving direction directly to the opposite direction, the truck brakes regenerative until it starts travelling into the opposite direction.
- The truck brakes, if the tiller is moved up or down to the braking zones ('B'). If the tiller is released, the tiller moves automatically up to the upper baking zone ('B').
  The truck brakes until it stops.
- The safety (belly) button (21) prevents the operator from being crushed. If this button is activated, the truck decelerates and/ or starts travelling into the backwards direction ('Bw.') for a short distance and stops. Please consider, that this button also operates, if the truck is not travelling and the tiller is in the operating zone.

j. Malfunctions

If there are any malfunctions or the truck is inoperative, please stop using the truck and activate the emergency button (6) by pushing it. If possible, park the truck on a safe area, turn the key switch (8) anti-clockwise and remove the key.
Inform immediately the manager and, or call your service. If necessary, tow the truck out of the operating area by using dedicated towing/ lifting equipment.

k. Emergency

In emergencies or in the event of tip over (or off dock), keep safe distance immediately. If possible push the emergency button (6). All electrical functions will be stopped.

7. BATTERY CHARGING AND REPLACEMENT

- Only qualified personnel are allowed to service or charge the batteries. The instructions of this handbook and from the battery- manufacturer must be observed.
- Lead-acid batteries and lithium batteries are allowed.

-
- Recycling of batteries undergoes national regulations. Please follow these regulations.
- By handling batteries, open fire is prohibited, gases could cause explosion!
- In the area of battery charging neither burning materials nor burning liquids are allowed. Smoking is prohibited and the area must be ventilated.
- Park the truck securely before starting charging or installing/changing the batteries
- Before finishing the maintenance work, make sure, that all cables are connected correctly and that there are no disturbing towards other components of the truck.

The truck is equipped with following sealed traction battery- type:

1 pc 4PzS 24V/400Ah (C5) [830x273x627 mm (LXWXH)]
/1 pc 3PzS 24V/270Ah (C5) [830x219x537 mm (LXWXH)]
/1 pc 4PzS 24V/360Ah (C5) [830x273x537 mm (LXWXH)]
/1 pc 24V200Ah1HR [624x218x537 mm (LXWXH)]
/1 pc 24V300Ah1HR [830x273x537 mm (LXWXH)]

THE WEIGHT OF THE BATTERIES HAS AN INFLUENCE TO THE TRUCKS OPERATING BEHAVIOR.
PLEASE CONSIDER THE MAXIMUM OPERATING TEMPERATURE OF THE BATTERIES.

a. Replacement

Park the truck securely and switch off the stacker with the key (8) and activate the emergency button (6). Push the mast forward according to Fig. 12, open the battery cover (14), disconnect the battery plug, then remove the battery with a crane. If you don't push the mast forward, then open the battery cover (14), loosen the screw and take away the battery cover, then remove the battery with a crane. The installation is in the reverse order of the removal. Otherwise the tuck could be damaged.

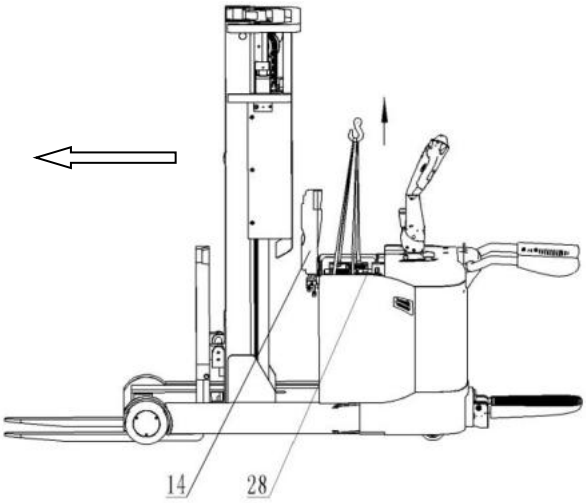

Fig. 12: battery replacement

b. Battery Indicator

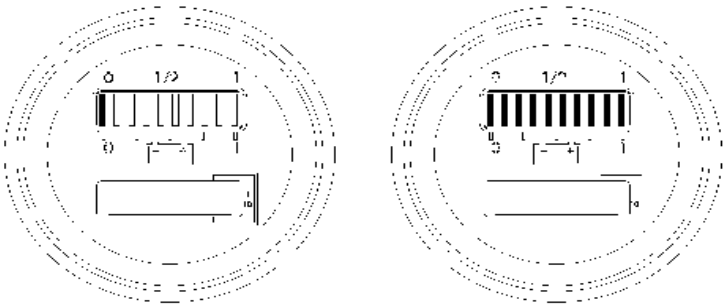

Battery discharged Battery charged

Fig. 13.1: Battery discharge

Only when the battery is properly charged, the most right LED lit. As the battery's state-of-charge decreases, successive LEDs light up, only one on at a time.

- The 2nd from left LED flashes, indicating "energy reserve" (70% depth of discharge).
- The 2 most left LEDs alternately flash, indicating "empty" (80% depth of discharge).

Fig.13.2: Battery discharge indicator(Li)

During normal use, as the battery discharges, BDI will steadily decrease from 100%.

When the BDI displays 20%, the yellow indicator light flashes, indicating that the battery reaches "empty" and needs to be charged. At this time, the truck walks slowly and forks cannot be lifted.

c. Charging

- Before charging ensure that you are using an appropriate charger for charging the installed battery!
- Before using the charger, please fully understand the instructions of the charger instructions.
- Always follow these instructions!
- The room, where you are charging must be ventilated.
- The exactly charge status can be only checked from the dischrge indicator. To control the status, the charging must be interrupted and the truck must be started.

Park the truck at a dedicated secured area with a dedidcated power supply.

Lower the forks and remove the load.Open the battery cover and let it stay upright.

Switch the truck off and connect the battery plug to the charging plug of the charger.

The charger starts charging the battery if the charger is connected to the main power supply.

Disconnect the battery plug (28) after the charger finished charging.

Connect the battery plug (28) with the plug at the truck.

Close the battery cover.

8. REGULAR MAINTENANCE

- Only qualified and trained personnel are allowed to do maintenance on this truck.
- Before maintaining, remove the load and lower the forks to the lowest position.
- If you need to lift the truck, follow chapter 4b by using designated lashing or jacking equipment. Before working, put safety devices (for instance designated lift jacks, wedges or wooden blocks) under the truck to protect against accidental lowering,

movement or slipping.

- Please pay attention by maintain the tiller arm. The gas pressure spring is pre-loaded by compression. Carelessness can cause injury.
- Use approved and from your dealer released original spare parts.
- Please consider that oil leakage of hydraulic fluid can cause failures and accidents.
- It is allowed to adjust the pressure valve only from trained service technicians.
- If you need to change the wheels, please follow the instructions above. The castors must be round and they should have no abnormal abrasion.
  Check the items emphasized maintenance checklist.

a. Maintenance checklist

Table 3: Maintenance checklist		Interval (Month)			
		1	3	6	12
	Hydraulic				
1	Check the hydraulic cylinder, piston for damage noise and leakage		●		
2	Check the hydraulic joints and hose for damage and leakage		●		
3	Inspect the hydraulic oil level, refill if necessary		●		
4	Refill the hydraulic oil (12 month or 1500 working hours)				●
	Mechanical system				
5	Inspect the forks for deformation and cracks		●		
6	Check the chassis for deformation and cracks		●		
7	Check if all screws are fixed		●		
8	Check mast and chain for corrosion, deformation or damages, replace if necessary	●			
9	Check the gearbox for noise and leakage		●		
10	Check the wheels for deformation and damages, replace if necessary		●		
11	Lubricate the load wheel bearing		●		
12	Inspect and lubricate the pivot points		●		
13	Lubricate the grease nipples	●			
14	Replace the guarding and/or protective screen if it is damaged	●			
	Electric system				
15	Inspect the electric wiring for damage		●		
16	Check the electric connections and terminals		●		
17	Test the Emergency switch function		●		
18	Check the electric drive motor for noise and damages		●		
19	Check the working status of sensor		●		
20	Check if correct fuses are used, if necessary replace.		●		
21	Test the audio warning signal		●		
22	Check the contactors		●		
23	Check the frame leakage (insulation test)		●		
24	Check function and wear of the accelerator		●		
25	Check the electrical system of the drive motor		●		

	Braking system				
26	Check brake performance		•		
	Battery				
27	Check the battery voltage		•		
28	Clean and grease the terminals and check for corrosion and damage		•		
29	Check the battery housing for damages		•		
	Charger				
30	Check the main power cable for damages			•	
31	Check the start-up protection during charging			•	
	Function				
32	Test the audio warning signal	•			
33	Check the air gap of the electromagnetic brake	•			
34	Test the emergency braking	•			
35	Test the reverse and regenerative braking	•			
36	Test the safety (belly) button function	•			
37	Check the steering function	•			
38	Check the lifting and lowering function	•			
39	Check the tiller arm switch function	•			
40	Test the key switch of damages and function	•			
41	Test the speed limitation switch (lifting height >~600mm)	•			
42	Test the speed limitation switch (lifting height >~1800mm)	•			
	General				
43	Check if all decals are legible and complete	•			
44	Check if the protective screen and or guarding is not damaged	•			
45	Inspect the castor, adjust the height or replace it, if worn out		•		
46	Carry out a test run	•			

b. Lubricating points

Lubricate the marked points according to the maintenance checklist. The required grease specification is: DIN 51825, standard grease.

1. Guide rail
2. Bearing
3. Pin axle
4. Chain
5. Mast
6. Drive wheel gear

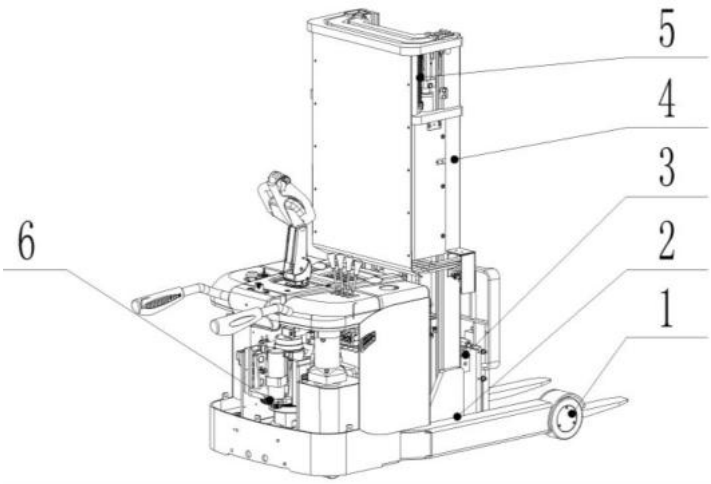

Fig. 14: Lubricating points

c. Check and refill hydraulic oil

The required hydraulic fluid- type is

- H-LP 46, DIN 51524

- Viscosity is 41.4 - 47
- Depending on the type the amount
  Is 15L

Waste material like oil, used batteries or other must be probably disposed and recycled according to the national regulations and if necessary brought to a recycling company.
The oil level height shall be in the not lifted position min.14.9L to 15.1L.
If necessary add oil at the filling point.

d. Checking electrical fuses

Remove the main cover. The fuses are located according to fig. 15; the size is according to table 4.

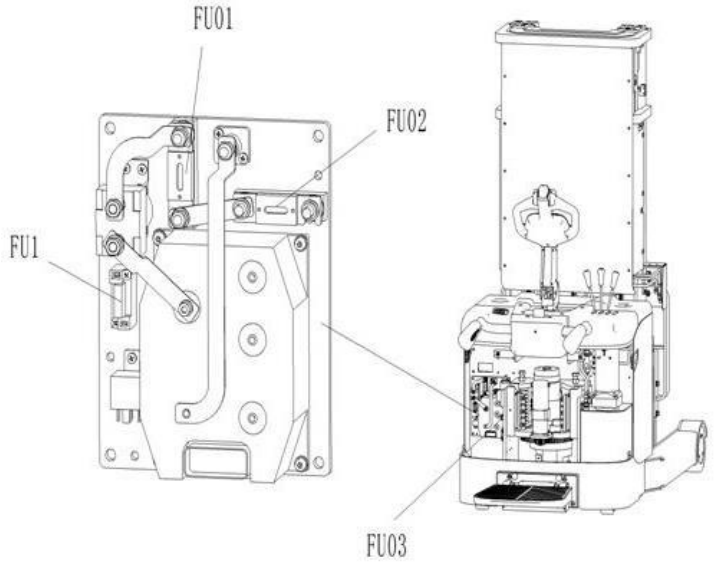

Fig. 15: Location fuses

Table 4: Size of the fuses

	Rate
FU1	15A
FU01	150A
FU02	200A
FU03	30A

e. Removing, reattaching guarding

DO NOT USE THIS TRUCK, IF THE GUARDING IS DAMAGED OR NOT CORRECTLY ASSEMBLED!

If the guarding needs to be removed, unbolt the fixing screws and remove the screen carefully. The screws will remain with the screen. For reattaching place the screen to the right position and fix each screw correctly. If you need to replace parts, please call your next service partner.

9. TROUBLE SHOOTING

- If the truck has malfunctions follow the instructions, mentioned in chapter 6.

Table 5: Trouble shooting

TROUBLE	CAUSE	REPAIR
Load can’t be lifted	Load weight too high	Lift only the max. capacity, mentioned on the ID-plate
	Battery discharged	Charge the battery
	Lifting fuse faulty	Check and eventually replace the lifting fuse
	Hydraulic oil level too low	Check and eventually refill hydraulic oil
	Oil leakage	Repair the hoses and/or the sealing of the cylinder
	Lifting stops at ~1800mm	Move the protective arms into the downside position
	Lifting stops at ~1800mm	Check the sensor for the protective arm
	Height sensor for 1800mm height defect	Check the height sensor on the mast
Oil leakage from air breathing	Excessive quantity of oil.	Reduce oil quantity.
Stacker not starts operating	Battery is charging	Charge the battery completely and then remove the main power plug form the electrical socket.
	Battery not connected	Connect the battery correctly
	The fuse is faulty	Check and eventually replace fuses
	Battery discharged	Charge the battery
	Combined emergency switch is activated	De-activate the combined emergency switch by insert and pull the knob.
	Tiller in the operating zone	Move the tiller firstly to the braking zone.
	Protective arms in the upright position, platform folded upright	Move the protective arms into the downside position
	Foldable platform or protective arms in one of the allowed positions	Check the proximate sensors for the arms and platform
	Foldable platform or protective arms not in one of the allowed positions	Check the correct function of the arms and/or platform
Only travelling in one direction	The accelerator and the connections are damaged.	Check the accelerator and the connections.
The stacker only travels very slowly	The battery is discharged.	Check the battery status at the discharge indicator
	The electromagnetic brake is engaged.	Check the electromagnetic brake
	The relating tiller cables are disconnected or damaged	Check the tiller cables and connections.
	Defective height sensor for reduced speed at ~300mm height	Check the sensor
	Electric system overheated	Stop using and cool down the truck
	Defective heat sensor	Check and if necessary replace the heat sensor
The stacker starts up suddenly	The controller is damaged.	Replace the controller.
	The accelerator not moves back to its neutral position.	Repair or replace the accelerator.

If the truck has malfunctions and can’t be operated out of the working zone, jack the truck up and go with a load handler under the truck and safe the truck securely. Then move the truck out of the aisle.

10. WIRING/ CIRCUIT DIAGRAM

a. Electrical circuit diagram

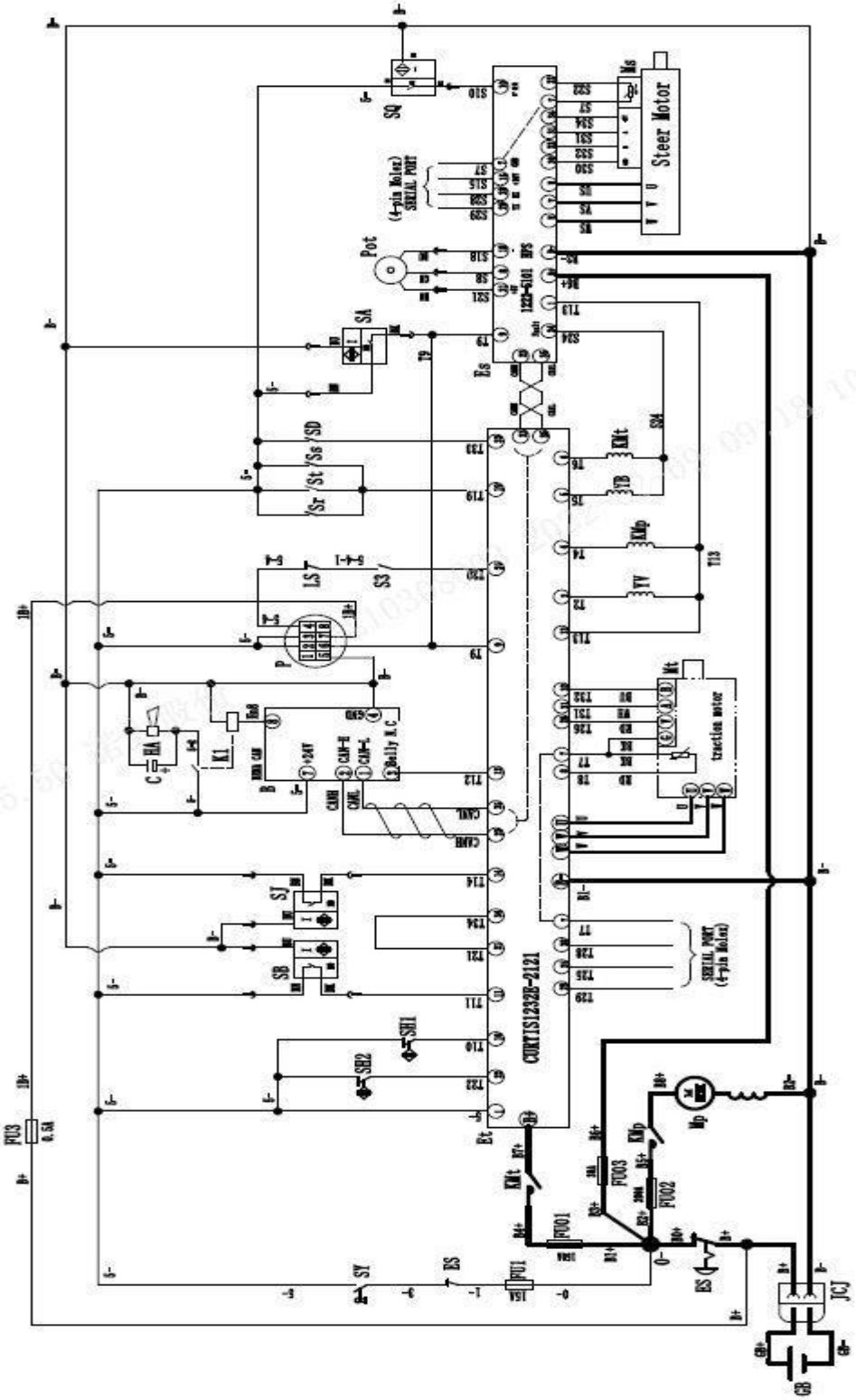

Fig. 16: Electric diagram

FU1 : 15 A
FU01 : 150 A
FU02 : 200 A
FU03 : 30A

Table 6: Description of electrical diagram

Code	Item	Code	Item
GB	Battery	SH1、SH2	Magnetic switch
ES	Emergency button	SB	Proximity switch
FU01	Fuse 150A	SJ	Proximity switch
FU02	Fuse 200A	SA	Proximity switch
FU03	Fuse 30A	S3、Sr、St、SD、SS	Micro switch
FU1	Fuse 15A	YV	Electromagnetic valve
FU3	Fuse tube 0.5A	C	Capacitor
KMt	Traction motor contactor	HA	Horn
KMp	Pump motor contactor	Pot	Steering potentiometer
Et	Traction controller	YB	Electromagnetic brake
Ep	Steering controller	K	Relay
B	Tiller	SQ	Proximity switch
P	Indicator	SY	Key switch
Mt	Traction motor	LS	Micro switch
Ms	Steering motor	JCJ	Connector
Mp	Pump motor		

b. Hydraulic circuit

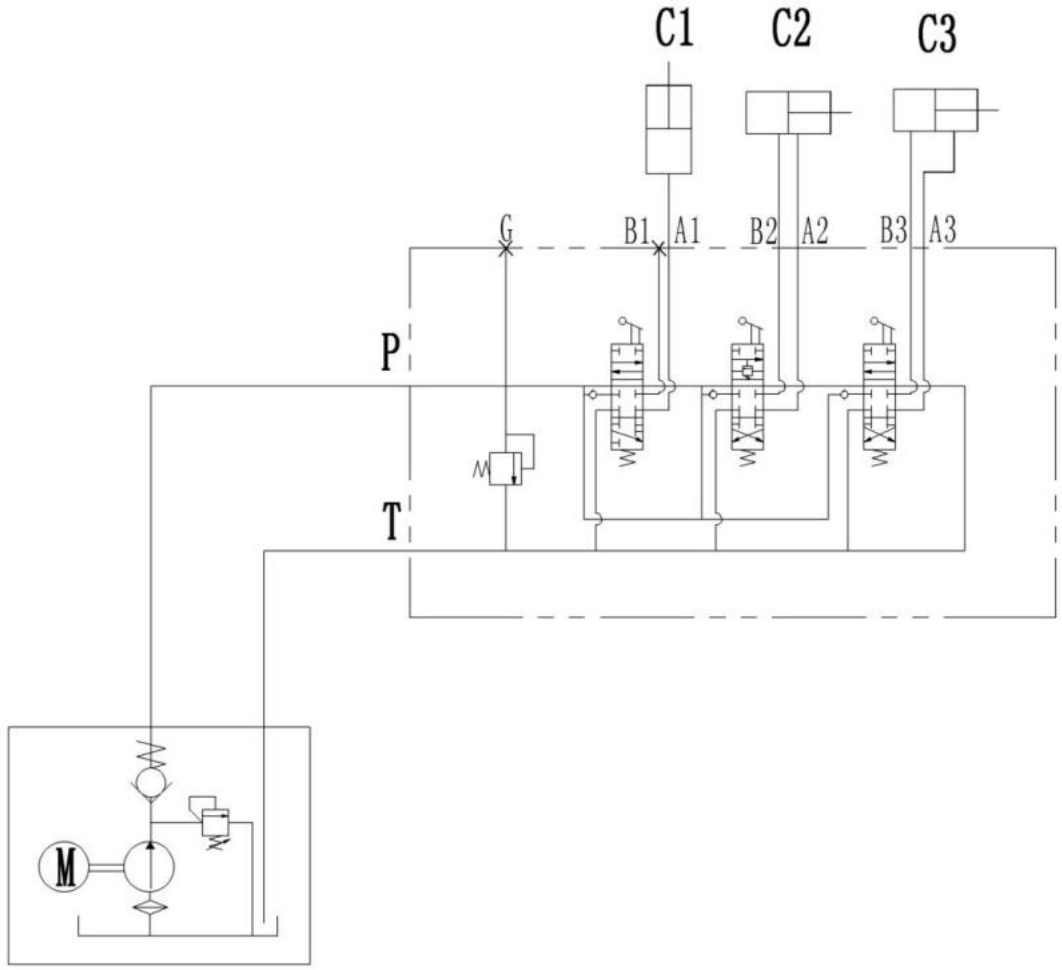

Fig. 17: Hydraulic circuit

C1: Lifting cylinder
C2: Forward/backward cylinder
C3: Forward/backward tilting cylinder

11. SPECIALIZED STIPULATIONS FOR THE US- AMERICAN MARKET

The content in this chapter is specialized for the US-American market.

a. Foreword/ Compliance

Operating this truck requires knowledge which can be acquired from this instruction handbook. This handbook must be kept available throughout the entire period of use of the industrial truck.

IT IS LAW; YOU MUST BE TRAINED AND CERTIFIED TO OPERATE THIS TRUCK! READ AND OBEY ALL WARNINGS AND INSTRUCTIONS IN THIS MANUAL AND ON THE TRUCK!

Only properly trained operators are allowed to operate a powered industrial truck. Your employer must train you and certify, that you are qualified to operate this truck (required by OSHA § 1910.178). The training must satisfy OSHA requirements and as minimum the topics mentioned in this handbook. Depending on the context in this operating manual, the user can refer to several people, including the owner of the truck, anyone who leases or borrows this truck, and the operator as defined in ASME B56.1. Please pay attention to the section in ASME B56.1 concerning the operator. In this standard, it is defined that the safe operation is the responsibility of the operator (ASME B56.1-2003, Part II, section 5.1.1). You and others can be seriously injured or even killed if you don't use this truck correctly. Before operating your truck, inspect your truck and ensure that it is in correct working order. This truck was designed and built to current industry and government standards. For more information see following:

- ASME B56.1 (American Society of Mechanical Engineers)
- OSHA §1910.178 (Occupational Safety and Health Act)
- UL 583 (Underwriters Laboratory)
- ANSI Z535.4 (American National Standards Institute)

⚠ DANGER This sign indicates hazard situations, if not avoided, will result in serious injury or death. The instructions or precautions to this message must be observed to avoid the potential risk of injury or death.

⚠WARNING If not followed, warning indicates hazard situations which may lead to moderate injury. The instructions or precautions to this message must be observed to avoid the potential risk of injury or death.

⚠ CAUTION If not followed, caution indicated situations which may lead to minor injury. Instructions or precautions must be observed to avoid minor injury.

b. Description warning labels (only US- market)

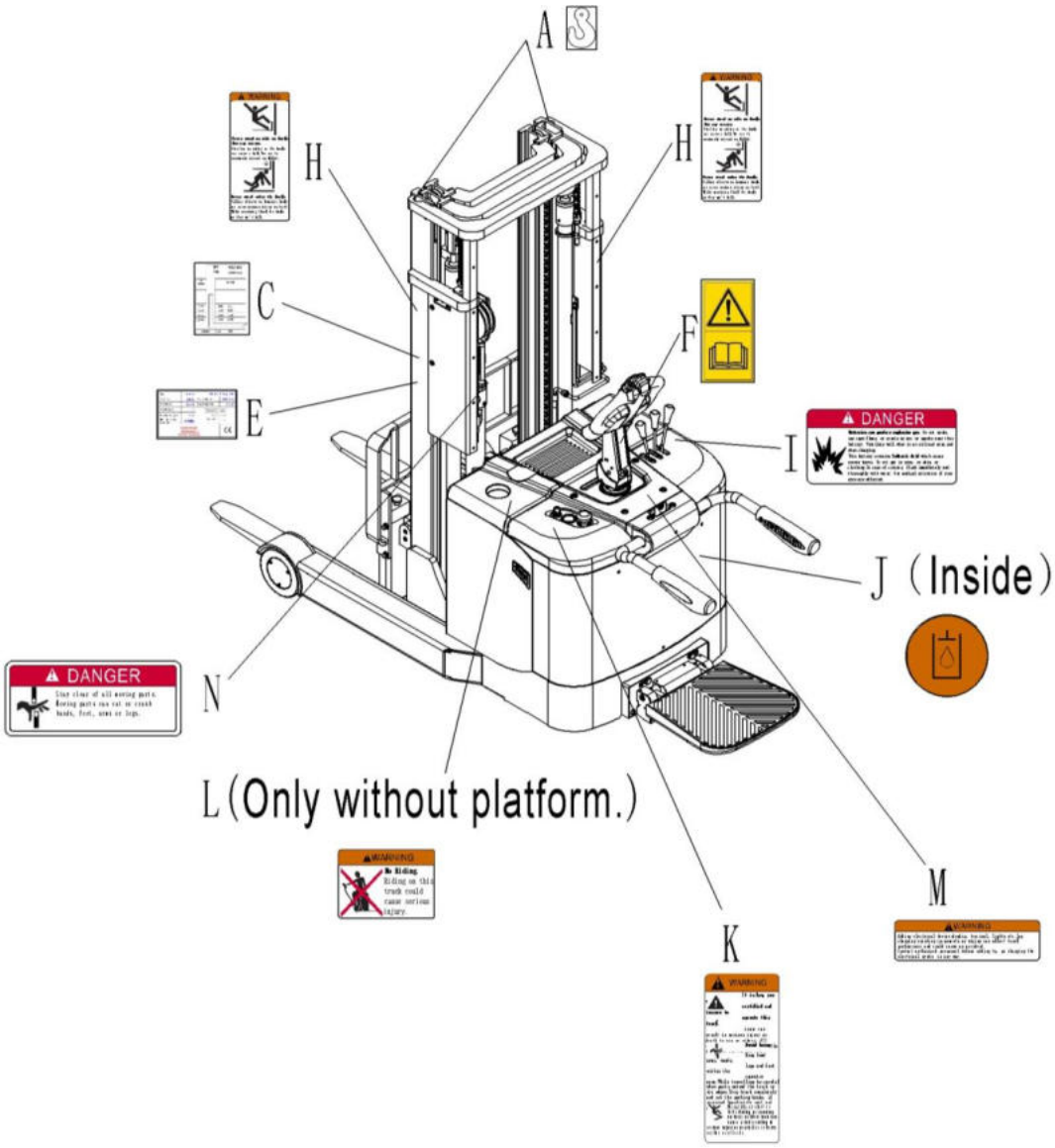

Fig. 18: Warning labels and safety devices (only USA)

A Crane hook label
C Residual lift capacity sticker
E Identification plate (ID-plate)
F Sticker to read and follow these instructions
H Sign not under, on forks
I Sign danger battery
J Sign oil filling point
K Sign warning stay clear stop truck
L Sign danger not riding
M Sign warning electrical devices
N Sign danger being crushed

The truck is equipped with an emergency button (6) which stops all lifting-, lowering-, driving- functions and engages the failsafe electromagnetic brake when it is pushed. The function is described in chapter 2c. Follow the instructions given on the decals. Replace the decals if they are damaged or missing.

Sign read and follow this instruction (F)

Sign not under, on forks(H)

Sign danger battery (I)

Sign oil filling point (J)

Sign warning stay clear stop truck (K)

Sign danger not riding (L)
(only if not equipped with a foldable plat

Sign warning electrical devices (M)

Sign danger being crushed (N)

c. Technical data for US market

Drawing see page 7

Table 7: Main technical data for standard version (US market)

Technical data sheet for industrial truck acc. to VDI 2198						
Distinguishing mark	1.2	Manufacturer`s type designation		PS30RM36PLUS	PS30RM70PLUS	PS30RM110PLUS
	1.3	Power(battery ,diesel,petrol gas,manual)		Battery		
	1.4	Operator type		Pedestrian		
	1.5	Load Capacity / rated load	Q (lbs)	2850		
	1.6	Load centre distance	C (in)	24		
	1.8	Load distance ,centre of drive axle to fork	X (in)	16		
	1.9	Wheelbase	Y (in)	53		
Weight	2.1	Service weight	lbs	3850	4200	4850
	2.2	Axle loading, laden front/rear	lbs	3200/ 3500	3350/ 3700	3650/ 4000
	2.3	Axle loading, unladen front/rear	lbs	2900/ 950	3150/ 1050	3600/ 1250
Tires, Chassis	3.1	Tires		Polyurethane (PU)		
	3.2	Tire size, front	in	∅9.8 ×3.2		
	3.3	Tire size, rear	in	∅8.3×3.3		
	3.4	Steering wheel size	in	∅4.9×2.4		
	3.5	Wheels, number front/rear(x=driven wheels)		1x+2/2		
	3.6	Tread, front	b_{10}(in)	26.8		
	3.7	Tread, rear	b_{11}(in)	42.7		
Dimensions	4.1	Tilt of mast/fork carriage forward/backward	α / β (°)	2/4		
	4.2	Lowered mast height	h_1(in)	86	82	86
	4.3	Free Lift height	h_2(in)	63	—	63
	4.4	Lift	h_3(in)	63	118	189
	4.5	Extended mast height	h_4(in)	98	153	224

	4.9	Height of tiller in drive position min./ max.	h_{14}(in)	40.6/55.7	
	4.15	Height, lowered	h_{13}(in)	2.0	
	4.19	Overall length	l_1(in)	81.9[1)]	
	4.20	Length to face of forks	l_2(in)	45.7[1)]	
	4.21	Overall width	b_1(in)	46.5	
	4.22	Fork dimensions	s/e/l (in)	1.4/3.9/36.2(42.1)	
	4.25	Distance between fork-arms	b_5(in)	8.7-29.9	
	4.26	Distance between supporting arm and load side	b_4(in)	34.6	
	4.28	Reach distance	l_4(in)	21.5	
	4.32	Ground clearance, centre of wheelbase	m_2(in)	1.6	
	4.33	Aisle width for pallets 1000X1200 crossways	Ast(in)	102.4[1)]	
	4.34	Aisle width for pallets 800X1200 lengthways	Ast(in)	104.3[1)]	
	4.35	Turning radius	Wa(in)	61.8[1)]	
Performance data	5.1	Travel speed, laden/ unladen	mph	3.4/3.7-5.0/5.0	
	5.2	Lift speed, laden/ unladen	fpm	16.73/24.01	21.65/32.48
	5.3	Lowering speed, laden/ unladen	fpm	24.61/15.75	21.65/19.68
	5.8	Max. gradeability, laden/ unladen	%	5/8	
	5.10	Service brake		Electromagnetic	
Electric- motor	6.1	Drive motor rating	HP	3.5	
	6.2	Lift motor rating	HP	3.0	4.0
	6.3	Battery acc. to DIN 43531/ 35/ 36 A, B, C, no		3PzS	4PzS
	6.4	Battery voltage, nominal capacity	V/Ah	24 / 270	24 / 400
	6.6	Energy consumption acc. to VDI cycle	kWh/h		
Additional data	8.1	Type of drive control		AC-Speed Control	
	8.4	Sound level at driver`s ear acc.to EN 12053	dB(A)	67	

1) with foldable platform the following dimensions increase: l_1, l_2 =+4,Wa/Ast=+4。

Table 8: Mast table

Mast table PS 30RM				
Designation	Lowered mast height h_1 (in)	Free lift height h_2 (in)	Lift height h_3 (in)	Extended mast height h_4 (in)
Single-stage mast	70 86	47 63	47 63	82 98
Two-stage mast	70 82	—	94 118	130 153
Three-stage mast FFL	70 82 86	47 59 63	142 177 189	176 208 224

12. DECLARATION OF CONFORMITY (valid, if sold within the EU)

[GB] CE Declaration of Conformity
The signatory hereby declares that the specified machine conforms to the EU Directive 2006/42/EC (Machine Directive) and 2004/108/EEC (Electro-Magnetic Compatibility, EMC) including their amendments as translated into national legislation of the member countries. The signatory is individually authorized to compile the technical documents.

[D] EG-KONFORMITÄTSERKLÄRUNG
Der Unterzeichner bescheinigt hiermit, dass die im Einzelnen bezeichnete Maschine den Europäischen Richtlinien 2006/42/EG (Maschinenrichtlinie) und 2004/108/EWG (Elektromagnetische Verträglichkeit - EMV) einschließlich deren Änderungen sowie dem entsprechenden Rechtserlaß zur Umsetzung der Richtlinien in nationales Recht entspricht. Der Unterzeichner ist bevollmächtigt, die technischen Unterlagen zusammenzustellen.

[E] DECLARACIóN DE CONFORMIDAD CE
El signatario certifico por medio de la presente que la máquina especificada cumple con las Normas Europeas 2006/42/CE (Normativa para maquinarias) y 2004/108/CE (Compatibilidad electromagnética), incluyendo sus respectivas odificaciones, así como con el decreto-ley para la adaptación de las normas al derecho nacional. El signatario dispone de una autorización individual que le permite compilar la documentación técnica.

[F] DECLARATION DE CONFORMITE CE
Par la présente déclaration, les soussignés certifient que le machines spécifié ci-dessus est conforme à la loi et aux directives européennes 2006/42/CE (directive sur les machines) et 2004/108/CEE (compatibilité électromagnétique - CEM), y compris aux modifications qui y sont apportées et à l'arrêté autorisant sa transposition en droit national. Chaque signataire est habilité à établir individuellement la documentation technique.

[NL] EG-CONFORMITEITSVERKLARING
Ondergetekenden verklaren hierbij dat - volgens de nationale wetgeving van de Lidstaten - de hierboven vermelde opgegeven machina beantwoordt aan de bepalingen qua veiligheid bij machines (EG richtlijn 2006/42/EC) en electro-magnetische compatibilteit (EG richtlijn 2004/108/EEC). Ondergetekenden zijn ieder individueel gemachtigd het technisch dossier samen te stellen.

[P] DECLARAÇÃO DE CONFORMIDADE CE
Pela presente, os signatários certificam que o máquina especificado está conforme às Directivas Europeias 2006/42/CE („Máquinas") e 2004/108/CEE („Inocuidade Electromagnética - IEM"), incluindo as alterações das mesmas e o respectivo decreto-lei para a transposição em lei nacional. Cada um dos signatários está autorizado a proceder à elaboração da documentação técnica.

[I] DICHIARAZIONE DI CONFORMITÀ CE
I sottoscritti dichiarano che il veicolo per trasporti interni a macchina specificato soddisfa le Direttive Europee 2006/42/EC (Direttiva Macchine) e 2004/108/EEC (Compatibilità elettromagnetica - EMV) comprese le relative modifiche, come pure il rispettivo decreto legislativo per la conversione delle direttive in diritto nazionale. I sottoscritti sono singolarmente autorizzati alla creazione della documentazione tecnica.

[BG] ЕВРОПЕЙСКА ОБЩНОСТ - ДЕКЛАРАЦИЯ ЗА СЪОТВЕТСТВИЕ
Подписаните удостоверяват с настоящето, че подробно описаното машина средство отговаря на европейския норматив 2006/42/EG (норматив за машини) и на 2004/108/EG (електро-магнетична съвместимост), включително с техните промени, както и на съответния указ за прилагане на нормативите в националното право. Подписаните при това са упълномощении поотделно да съставят техническата документация.

[CZ] EG - PROHLÁŠENÍ O SHODĚ
Níže podepsaný tímto potvrzuje, že podrobný popis uvedené stroje odpovídá Evropským směrnicím 2006/42/EC (směrnice pro stroje) a 2004/108/EEC (elektromagnetická interference - EMV) včetně jejich pozdějších úprav, jakož i příslušným právním výnosům pro uplatnění příslušné směrnice v rámci národního práva. Každý z podepsaných jsou jednotlivě zplnomocněni k vytvoření technických podkladů.

[DK] EF-OVERENSSTEMMELSESERKLÆRING
Undertegnede attesterer hermed, at det specificerede maskine stemmer overens med de Europæiske Direktiver 2006/42/EU (maskindirektiv) og 2004/108/EØF (elektromagnetisk kompatibilitet - EMC) samt med den modsvarende lovvedtagelse til implementering af direktiver i den nationale lovgivning. De undertegnede er hver for sig beføjet til at sammenstille de tekniske dokumenter.

[EST] EL vastavusavaldus
Allakirjutanud tõendavad käesolevaga, et üksikasjaliselt kirjeldatud täpsustatud masin vastab Euroopa direktiividele 2006/42/EÜ (Direktiiv masinate kohta) ja 2004/108/EMÜ (Elektromagnetiline sobivus - EMS) kaasa arvatud nende muudatused ja nendele vastavatele õigusmäärustele direktiivide muutmiseks siseriiklikuks õiguseks. Iga allakirjutanu üksikult on volitatud koostama tehnilist dokumentatsiooni.

[FIN] EU-YHDENMUKAISUUSSELOSTUS
Allekirjoittaneet todistavat täten, että kukin erikseen mainittu omalla voimanlähteellä varustettu tehdaskone vastaa EU-direktiivien 2006/42/EC (koneenrakennusdirektiivi) ja 2004/108/EEC (sähkömagneettinen yhteensopivuus – EMC) määräyksiä sekä niiden muutoksia ja niiden kansalliseen lainsäädäntöön soveltamista koskevaa oikeussääntöä. Jokaisella allekirjoittaneista on oikeus itsenäisesti laatia asiaankuuluvia teknisiä asiakirjoja.

[GR] ΔΗΛΩΣΗ ΣΥΜΜΟΡΦΩΣΗΣ ΕΟΚ
Οι υπογράφοντες βεβαιώνουν διά της παρούσης ότι το συγκεκριμένο μηχάνημα συμμορφώνεται προς την Κοινοτική Οδηγία 2006/42/ΕΚ («Μηχανήματα») και 2004/108/ΕΟΚ (Ηλεκτρομαγνητικής Συμβατότητας, ΗΜΣ), καθώς και οι τροποποιήσεις τους, όπως μεταφράστηκε στην εθνική νομοθεσία των χωρών μελών. Οι υπογράφοντες είναι σε κάθε περίπτωση εξουσιοδοτημένοι ατομικά να καταρτίσουν τα τεχνικά έγγραφα.

[H] EU KONFORMITÁSI NYILATKOZAT
Alulírottak ezennel igazolják, hogy a részletesen leírt a megadott gép megfelel a 2006/42/EC (Gép-Irányelv) és a 2004/108/EEC (Elektromágneses összeférhetőség - EMV) Európai Irányelveknek, beleértve azok módosításait, valamint az irányelvek nemzeti jogba történő átültetésére irányuló megfelelő jogi rendelkezést. Továbbá az alulírottak mindegyike rendelkezik meghatalmazással arra nézve, hogy összeállíthatja a műszaki dokumentációt.

[LT] ES atitikimo deklaracija
Žemiau pasirašę asmenys patvirtina, kad atskirai aprašytas nurodyta mašina atitinka Europos Sąjungos direktyvas 2006/42/EB (Mašinų direktyva) ir 2004/108/EEB (Elektromagnetinis suderinamumas – EMS) įskaitant jų pakeitimus, o taip pat ir atitinkamą teisės aktą dėl direktyvų įgyvendinimo nacionalinėje teisėje. Kiekvienas iš pasirašiusių asmenų turi teisę ruošti techninę dokumentaciją.

[LV] ES atbilstības deklarācija
Ar zemāk redzamajiem parakstiem tiek apliecināts, ka norādīts mašīna atbilst Eiropas Savienības normatīvām 2006/42/EG (Mašīnu normatīvas) un 2004/108/EWG (Elektromagnētiskā atbilstība – EMV), ieskaitot to izmaiņas, kā arī atbilstošos tiesiskos rīkojumus normatīvu pielāgošanai nacionālajai likumdošanai. Parakstu īpašnieki ir atsevišķi pilnvaroti sastādīt tehniskās dokumentācijas.

[N] EU-KONFORMITETSERKLÆRING
Undertegnede bekrefter hermed at de enkelte betegnede maskin med kraftdrift tilsvarer de europeiske retningslinjene 2006/42/EC (maskinretningslinje)

og 2004/108/EEC (elektromagnetisk fordraglighet - EMV) inklusiv disses endringer og den tilsvarende rettsforordning til omsetning av nasjonal rett. Hver undertegnede er fullmektig til å sette sammen de tekniske dokumentene.

[PL] DEKLARACJA ZGODNOŚCI WE

Niżej podpisani deklarują, że poniżej opisana maszyna spełnia wymagania określone w dyrektywach Europejskich 2006/42/EC (Dyrektywa Maszynowa) i 2004/108/EEC (Kompatybilności elektromagnetycznej - EMC) wraz z ich późniejszymi zmianami oraz odpowiednimi rozporządzeniami mającymi na celu przeniesienie tych dyrektyw do prawa krajów członkowskich. Sygnatariusz jest indywidualnie upoważniony do zestawiania dokumentacji technicznej.

[RO] DECLARAŢIE DE CONFORMITATE CE

Subsemnaţii adeveresc prin prezenta că vehiculul de specificat maşină descris individual corespunde directivelor europene 2006/42/CE (Directiva privind maşinile) şi 2004/108/CEE (Compatibilitatea electromagnetică - CEM) inclusiv modificărilor lor precum şi actului legislativ corespunzător prentru transpunerea directivelor în drept naţional. Subsemnaţii sunt fiecare în parte împuterniciţi să întocmească documentaţia tehnică.

[RUS] Декларация соответствия стандартам ЕС

Настоящим лица, подписавшие документ, удостоверяют, что машина с указанной спецификацией соответствует европейским стандартам 2006/42/EG (Транспортная директива) и 2004/108/EWG (Электромагнитная совместимость - EMC), включая изменения в них, а также соответствующим национальным стандартам и нормам. Каждое по отдельности лицо, подписавшее документ, имеет полномочия для составления технической документации.

[S] EG-KONFORMITETSFÖRKLARING

Undertecknarna intygar härmed att det i detalj betecknade maskin uppfyller de Europeiska direktiven 2006/42/EG (Maskindirektiv) och 2004/108/EEG (Elektromagnetisk tålighet - EMV), inklusive ändringarna i detta och den motsvarande rättsförordningen för att omsätta direktiven i nationell rätt. Undertecknarna har var för sig fullmakt att sammanställa den tekniska dokumentationen.

[SK] vyhlásenie o zhode

Dolu podpísaní týmto potvrdzujeme, že podrobný popis uvedené stroje Zodpovedá Európskym smerniciam 2006/42/EC (ernica
pre stroje) a 2004/108/EWG (elektromagnetická tolerancia – EMV) vrátane jeho neskorších úprav, rovnako zodpovedá aj príslušným právnym nariadeniam na uplatnenie smerníc v rámci národného práva. Každý z podpísaných je jednotlivo splnomocnený na vytvorenie technických podkladov.

[SLO] EU IZJAVA O SKLADNOSTI

Podpisani s tem potrjujemo, da posamično označeno določeno stroj vozilo odgovarja Evropski direktivi 2006/42/EC (Direktiva o strojih) in 2004/108/EEC (Elektromagnetna skladnost - EMV) vključno z njihovimi spremembami ter ustrezno pravno uredbo o prevzemu smernic v nacionalno pravo. Podpisniki so vsakokrat posamezno pooblaščeni za izdajanje tehnične dokumentacije.

[TR] AB Uygunluk Açıklaması

İmza sahibi şahıslar, ayrıntıları belirtilen makine aracının, 2006/42/EC (Makine Yönergesi) ve 2004/108/EEC (Elektromanyetik Uyumluluk – EMC) no'lu Avrupa Yönergelerine ve bunların değişiklik sonucu oluşan metinlerine ve yönergelerin milli hukuk hükümlerine dönüştürülmesine dair ilgili hukuk kararnamesine uygun olduğunu tasdik ederler. İmza sahibi şahıslar teknik dosyaları bir araya getirmek için münferiden vekil tayin edildi.

(1) Type/ Typ/ Tipo/ Modello/ Tyyppi/ Tipo / ΤΥΠΟΣ/ Típus/ Tip/ Тип/ Tips/ Tipas/ Tüüp:
(2) Serial No./ Serien-Nr./ N°. de série/ Serienummer/ Nº de serie/ Numero di serie/ Serienr./ Sarjanro/ αυξάνων αριθμός/ Seriové číslo/ Szériaszám/ Nr.Seryjny/ Serijska številka/ Výrobné číslo/ Серийный номер/ Seri No./ Seerianr./ Sērijas Nr./ Serijos numeris:
(3) Year of constr./ Baujahr/ Année de constr./ Bouwjaar/ Año de constr./ Anno di costruzione/ Produktionsår/ Byggeår/ Tillverkningsår/ Valmistusvuosi / Ano de fabrico / έτος κατασκευής/ Rok výroby/ Gyártási év/ Rokprodukcji / Letnik / Год изготовления / Üretim yılı / Väljalaskeaasta / Izgatavošanas gads / Gamybosmetai
(4) Manufacturer or his authorized representative in Community/ Hersteller oder in der Gemeinschaft ansässiger Vertreter/ Fabricant ou son mandataire établi dans la Communauté/ Fabrikant of zijn in de Gemeenschap gevestigde gemachtigde/ Fabricante o representante establecido en la Comunidad/ Construtor ou Representante estabelecido na Comunidade/ Costruttore oppure il suo rappresentante nella Comunità/ Fabrikant eller dennesi Fællesskabet etablerede befuldmægtigede/ Produsent eller agent innen felleskapet/ Tillverkare eller representant inom EU/ Valmistaja tai yhteisömaassa oleva edustaja / V˘robce nebo jeho zastoupení/ Gyártó / producent albo jego przedstawiciel w EG (Wspólnota Europejska)/ Καηαζθεπαζηήο ή όκηηνο ηνπηηθώλ αληηπξνζώπσλ/ Üretici ya da Bölgedeki Yetkili Temsilci/ Proizvajalec ali pooblaščeni zastopnik s sedežem v EU/ Výrobca alebo zástupca so stálym bydliskom v EÚ / Изготовитель или его представитель, зарегистрированный в стране Содружества/ Tootja või organisatsioonis paiknev esindaja/ Ražotājs vai vietējais uzņēmuma pārstāvis / Gamintojas arba šalyje reziduojantis atstovas:
(5) Date/ Datum/ Data/ Fecha/ datum/ Dato/ päiväys/ Kuupäev/ Datums/дата / Dátum/ dátum/ tarih/ ημερομηνία
(6) Authorised signatory/ Im Auftrag/ pour ordre/ Incaricato/ Por orden de/ por procuração/ op last van/ på vegne af/ på uppdrag/ Etter oppdrag/ psta./ Ülesandel / pavedus / v.i. / По поручению / megbízásából /длъжностно лице / z pověření / z poverenia / po nalogu / na polecenie / din sarcina / adına / θαη' ελληνή

(1) Type: **XX XX – Self-propelled industrial truck**
(2) Serial No: **XXXXXXXX**
(3) Year of constr.: **YYYY**
(4) Manufacturer or his authorized representative in Community:
Company name/ Street / Postal code Town/ Country
(5) Date: **YYYY.MM.DD**
(6) Authorized signatory: **Mr. Sample**

Sample
If you can read this text,
your declaration is not complete.
In this case please ask for a copy