Print Number: Print Date:

NOBLELIFT

Scan QR Code for More

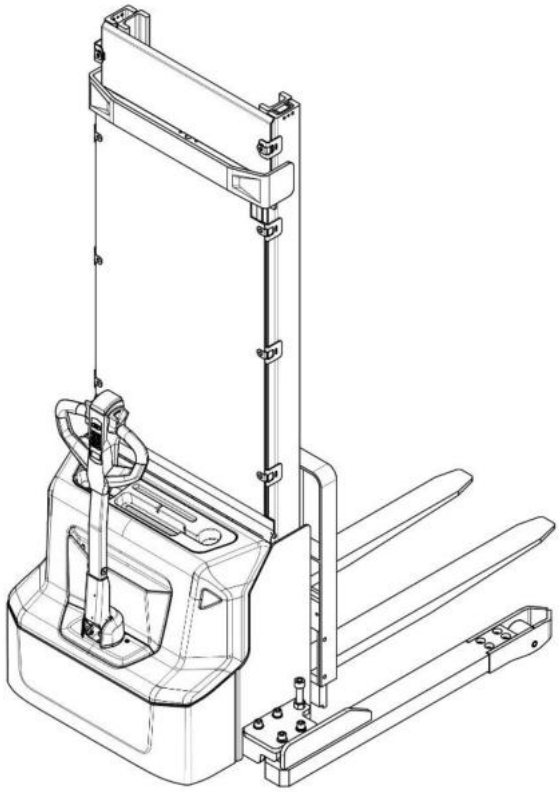

Electric Pallet Stacker SWB-130S

PARTS MANUAL

540346010101

Version: V01

Truck Identification Number From:

Parts Manual SWB-130S-PM01CN

Please order parts from authorized dealers of Noblelift Intelligent Equipment Co., LTD. In order to avoid wrong delivery, all the orders for spare parts should specify the following items:

- Truck model, identification number and manufacture year.
- Orders for spare parts of mast, hydraulic transmission unit, steering axle, motor, etc. shall indicate the manufacture number of these parts.
- Codes for Noblelift spare parts are shown in the table of parts manual. Please also pay attention to the description of supply status, order quantity, etc. (check the number listed in "Mark" column of the parts manual).

"Mark" Column:

The unmarked indicates the parts are in short supply cycle.

Number 1: supply as package. Indicating these that parts are small parts and seal parts, which are supplied in package unit and in short supply cycle.

Number 2: supply with constraints. Indicating that these spare parts are not in stock and will be prepared for production after receiving the order from customers, which are in long supply cycle.

Number 3: phasing-out supply. Indicating that these parts will be replaced by new parts due to technical improvements and the current stock will not be available when these parts run out. Please check the description of technical improvements notice.

Number 4: supply as assembly. Indicating that these parts are assembly parts defined by manufacture process, which cannot be supplied as a single part.

Number 5: check other tables.

This parts manual is the property of Noblelift and can be shared under the confidential agreement only, Noblelift has the right to claim for compensation of any unauthorized use. Copy without permission is not allowed. Figures in the manual are not limited by the original design. Noblelift Intelligent Equipment Co., LTD reserves the right to improve the products for continuous technology progress.

TABLE OF CONTENTS

Chapter 1: Drive system 5

01 Drive unit (536746013501).....5

02 Drive assembly (ZD) (536746013001).....7

03 Drive Assembly (YX) (532246013002)..... 错误!未定义书签。

Chapter 2: Hydraulic system.....9

01 Hydraulic unit (540346024001).....9

02 Pump unit (5403746023501) 11

Chapter 3: Truck structure 13

01 Truck frame (536746021501) 13

01 Truck frame (536746021501) continuation ..... 错误!未定义书签。

02 Forks (536746038001).....15

03 Battery holder (536746012501)..... 错误!未定义书签。

04 Battery holder (lithium battery) (536746012502)..... 错误!未定义书签。

05 Control panel assembly (532246010001) ..... 错误!未定义书签。

06 Control panel assembly (EN1175:2020) (532246010002) 17

Chapter 4: Steering system, braking system and wheels 21

01 Tiller (532246011001).....21

02 Tiller head (532246011002).....23

03 Tiller head (DETONG) (EN1175:2020) (532246011012) 25

04 Tiller head (SHIJIA) (EN1175:2020) (532246011013).....27

05 Load wheel (536746017001) 29

06 Side wheel (536746016501) 31

07 Manual steering (536746031201) ..... 错误!未定义书签。

Chapter 5: Mast system.....33

01 Two stage mast (532246044001)..... 错误!未定义书签。

01 Two stage mast (532246044001) continuation..... 错误!未定义书签。

01 Two stage mast (532246044001) continuation..... 错误!未定义书签。

02 Single mast (532246043001) ..... 错误!未定义书签。

02 Single mast (532246043001) continuation ..... 错误!未定义书签。

Chapter 6: Electrical parts and wire harness 41

01 Wire harness (532246033001) 41

02 Wire harness (EN1175:2020) (532246033010) 43

03 Wire harness (lithium battery) (532246033002) 45

04 Wire harness (lithium battery, EN1175:2020) (532246033011) 47

05 Electrical control unit (536746033003) 49

06 Charger (lead-acid battery) (532246036501) 51

07 Charger (lithium battery) (532246036502) 53

Chapter 7: Special equipment 55

01 Load backrest (536746040501) 55

Chapter 8: Others 57

01 Labels and decals (EU) (536746047001) 57

02 Labels and decals (USA) (536746047002) 59

Appendix 61

01 Electrical circuit diagram (lead-acid battery) (532246045501) 61

02 Electrical circuit diagram (Lithium battery) (532246045502) 62

03 Electrical circuit diagram (lead-acid battery, EN1175:2020) (532246045510) 63

04 Electrical circuit diagram (Lithium battery, EN1175:2020) (532246045511) 64

05 Hydraulic circuit diagram (532246045503) 65

06 Easy worn parts list 66

Chapter 1: Drive system

01 Drive unit (540346013501)

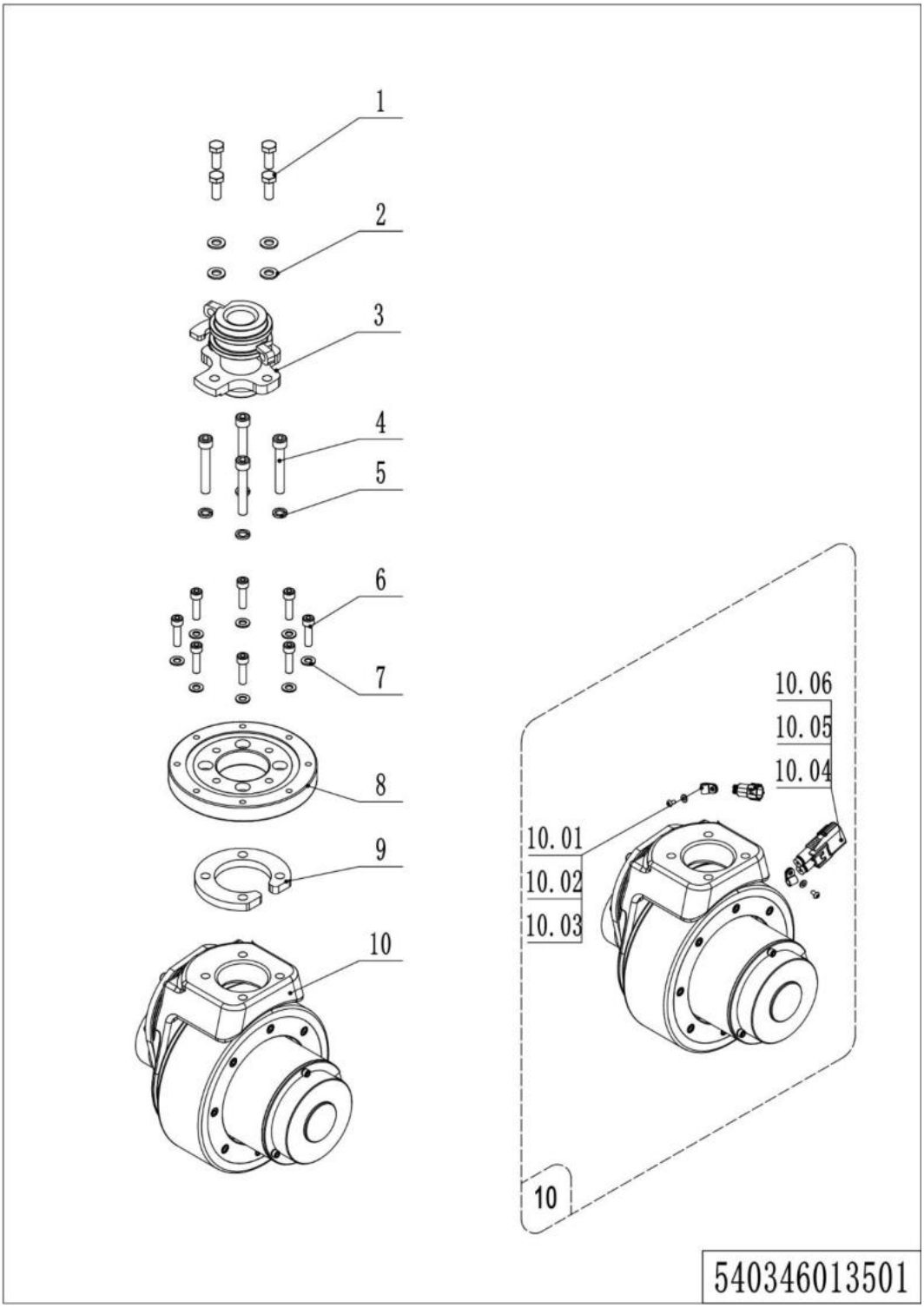

01 Drive unit (540346013501)

No.	Item Code	Mark	Item Description	Qty.	Substitute	Note
1	910100300036	1	Bolt	4		
2	910400100007	1	Flat Washer	4		
3	536731210005		Drive axle welding	1		
4	910200200082	1	Screw	4		
5	910400500007	1	Spring Washer	4		
6	910200200138	1	Screw	8		
7	910400100006	1	Flat Washer	8		
8	532213520001		Slewing Bearing	1		
9	536713520001		Linking plate	1		
10	508098510057	5	Drive Assembly (ZD)	1		PU wheel
10	508098510082	5	Drive Assembly (ZD)	1		Anti-skip wheel
10.01	910200700001	1	Screw	2		
10.02	910400100003	1	Flat Washer	2		
10.03	921300200001		Cable Clamp	2		
10.04	920400200169	1	Connector	1		
10.05	920400200171	1	Connector	2		
10.06	920400200172	1	Connector	2		

02 Drive assembly (ZD) (540346013001)

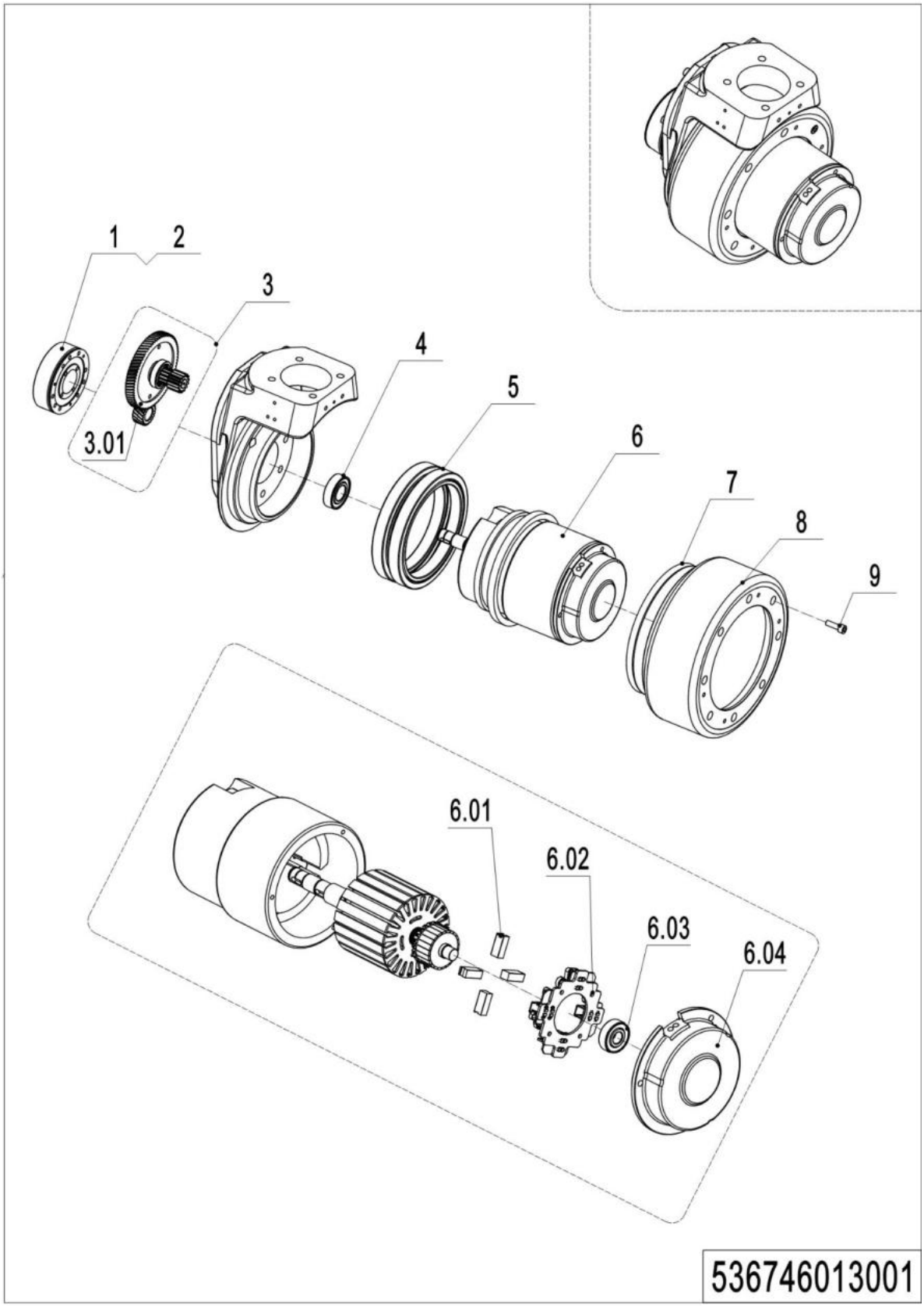

02 Drive assembly (ZD) (536746013001)

No.	Item Code	Mark	Item Description	Qty.	Substitute	Note
--	508098510057		Drive Assembly (ZD)	1		PU wheel
--	508098510082		Drive Assembly (ZD)	1		Anti-skip wheel
1	508098520002	2	Brake	1		ZD,8NM
2	508098520040		Rubber Strip	1		
3	508098510015	2	Gear Components	1		
3.01	508098520004		Gear	1		
4	910700200004		Bearing	1		
5	508098520011	2	Gear Ring	1		
6	508098510071		Motor	1		Waterproof plug
6.01	508098520000	2	Carbon Brush	4		
6.02	508098520001	2	Carbon Brush Holder	1		
6.03	910700200016		Bearing	1		
6.04	508098520036	2	End Cap	1		
7	508098520032		Seal	1		
8	508098520003		Wheel	1		
8	508098520026		Wheel	1		Anti-skip wheel
9	910200200167		Screw Kits	8		

Chapter 2: Hydraulic system

01 Hydraulic unit (540346024001)

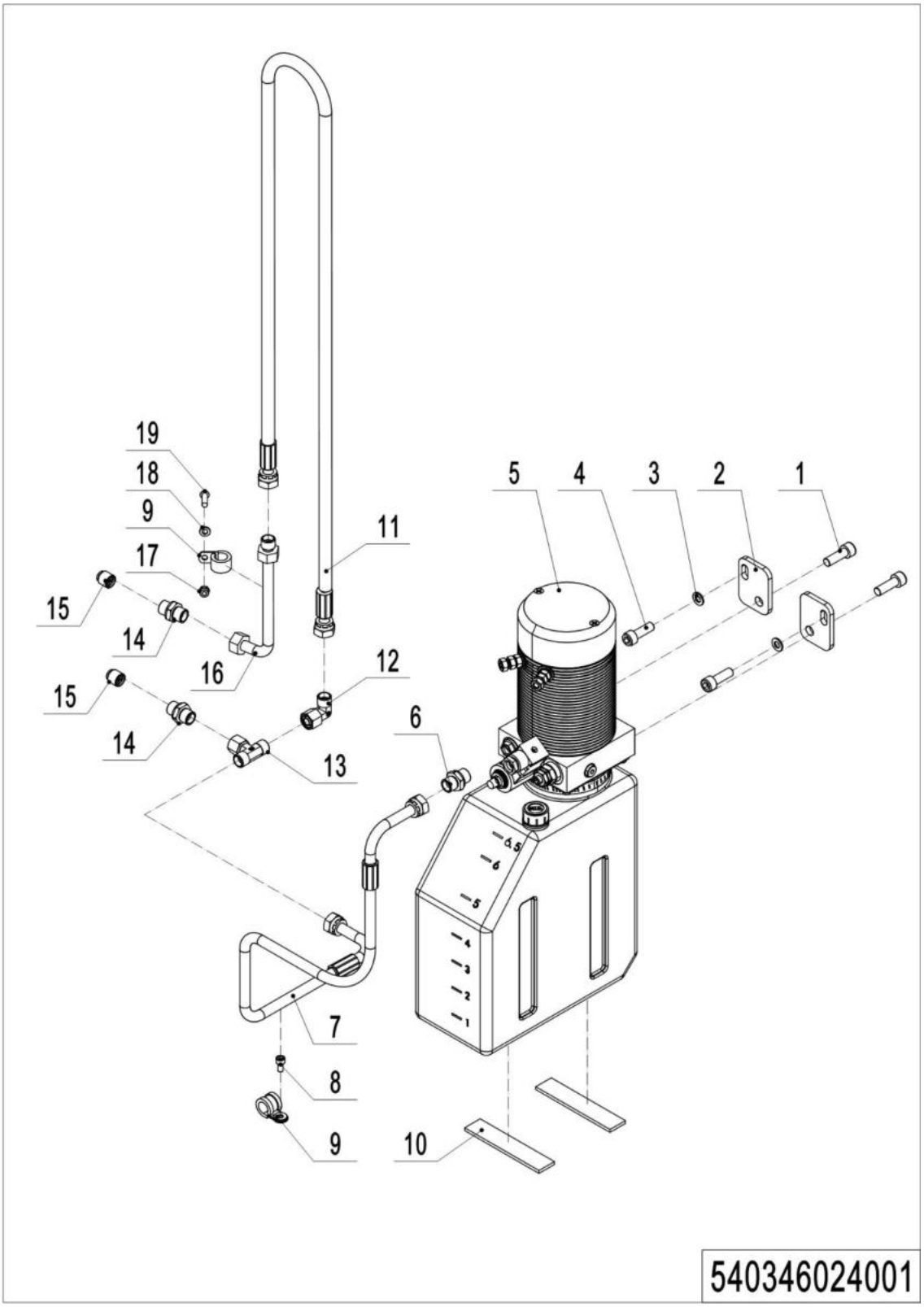

1=Supply as package; 2=Supply with limit; 3=Phasing out supply; 4=Supply as assembly; 5=Check other lists.

01 Hydraulic unit (540346024001)

No.	Item Code	Mark	Item Description	Qty.	Substitute	Note
1	910200200074	1	Screw	2		
2	532223520001		Plate	2		
3	910400100006	1	Flat Washer	2		
4	910200200053	1	Screw	2		
5	950900100159	5	Pump Unit	1		Check 540346023501
6	950400300007		Joint	1		
7	540224020001		Hose	1		
8	910200200033	1	Screw M6x12	1		
9	951000100003		Hose Clamp	2		
10	532223520010		Crash Pad	2		
11	540243520044		Hose	1		2600
11	540243520043		Hose	1		2900
11	540243520042		Hose	1		3200
11	540243520030		Hose	1		3600
12	950400200003		Joint	1		
13	950400900002		Joint	1		
14	950400400003		Joint	2		
15	950600300001		Safety Valve	2		
16	532643520136		Hose	1		
17	910300500003		Nut M6	1		
18	910400100005		Washer 6	1		
19	910200300019		Screw M6x20	1		

02 Pump unit (540346023501)

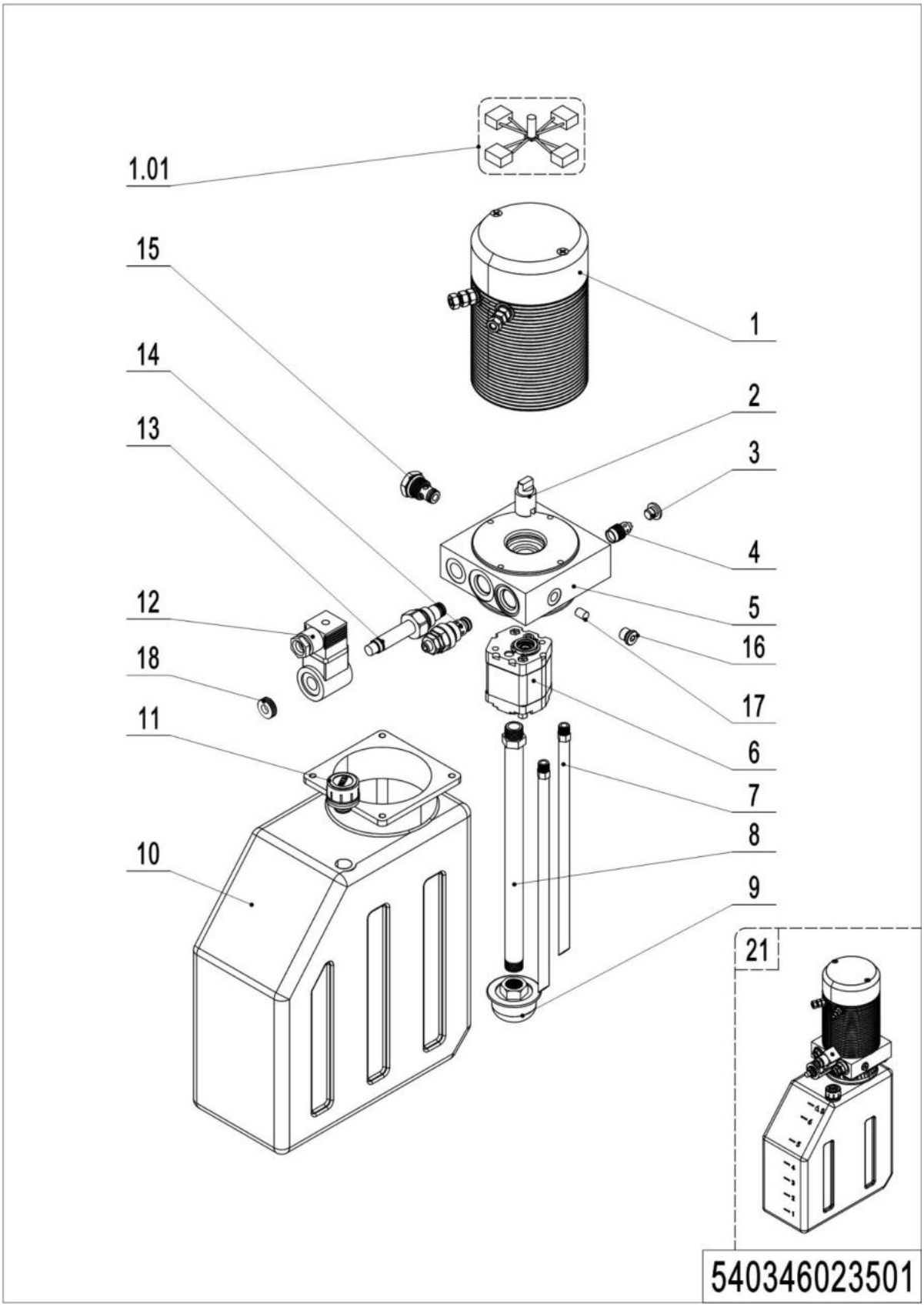

02 Pump unit (540346023501)

No.	Item Code	Mark	Item Description	Qty.	Substitute	Note
--	950900100108		Pump Unit	1		
1	532298510056		Motor	1		
1.01	532298510058		Carbon Brush	1		
2	532298520007		Coupling	1		
3	532298520003		End Cap	1		
4	532298510059		Valve	1		
5	53229810060		Valve Block	1		
6	532298510057		Gear pump	1		
7	532298520004		Pipe	2		
8	536798520002		Oil suction pipe	1		
9	532298510031		Filter	1		
10	536798520003		Oil tank	1		
11	532298510030		Vent plug	1		
12	532298510034		Coil	1		
13	532298510033		Magnetic Valve	1		
14	532298510044		Overflow valve	1		
15	532298510028		Check Valve	1		
16	532298510061		End Cap	1		
17	532298520010		Throttle screw	1		
18	532298520011		Nut	1		

Chapter 3: Truck structure

01 Truck frame (540346021501)

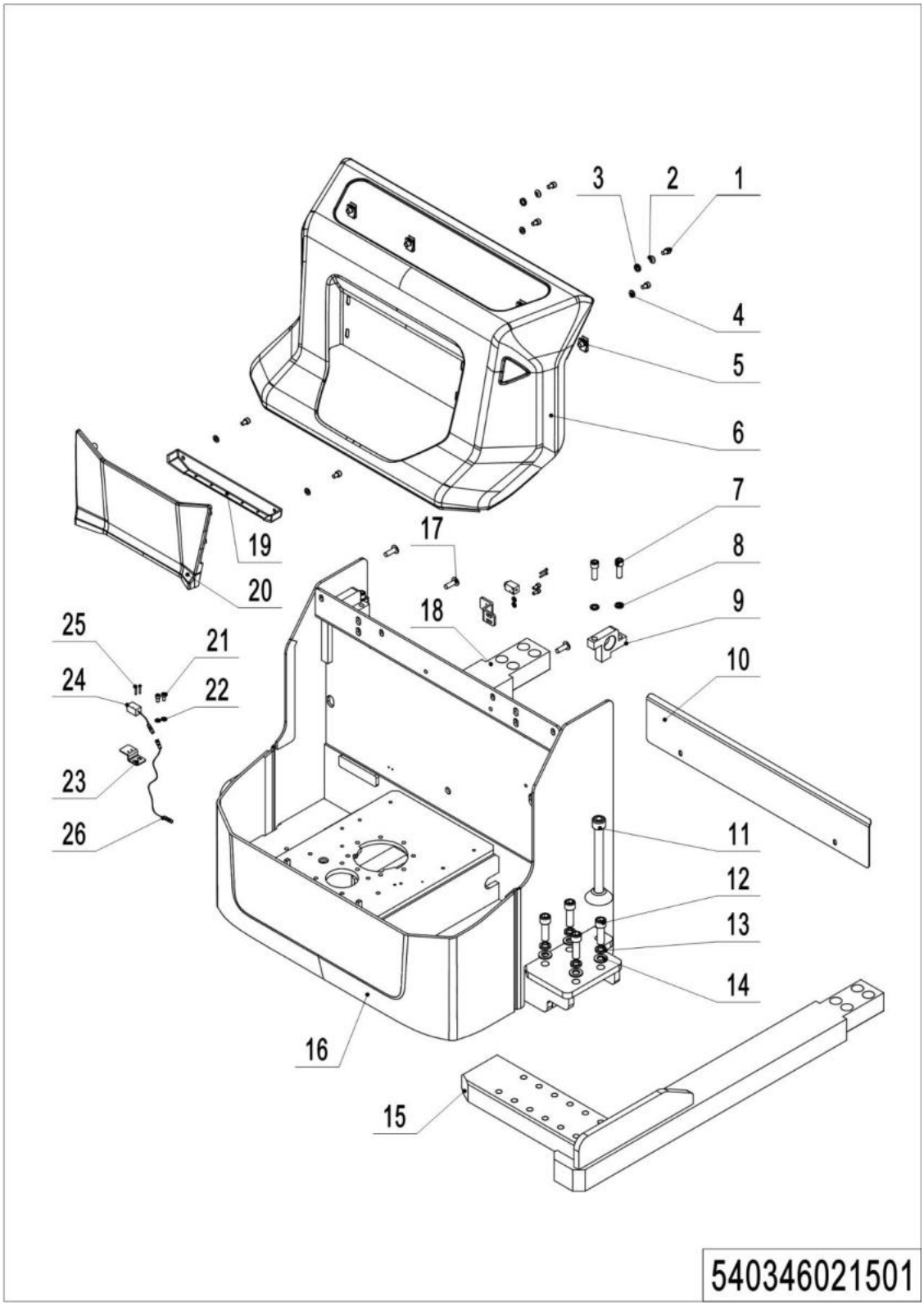

01 Truck frame (540346021501)

No.	Item Code	Mark	Item Description	Qty.	Substitute	Note
1	910200200053	1	Screw	8		
2	910400600004	1	Spherical Washer	2		
3	910400700004	1	Taper faced washer GB850-8	2		
4	910400100006	1	Flat Washer	6		
5	940400400003		Cage Nut	4		
6	532221510003		Cover	1		
7	910200200099	1	Screw	4		
8	910400500008	1	Spring Washer	4		
9	532221520020		Mounting Plate	2		
10	536721520001		Baffle	1		
11	536721510004		Support Leg Kit	2		
12	910200200114		Screw	8		
13	910400500010		Spring Washer	8		
14	910400100010		Flat Washer	8		
15	536721510003	2	Leg	1		
16	536721510001	2	Chassis welding	1		
17	941100100004	1	Screw	4		
18	536721510002	2	Leg	1		
19	532221520025		Cover	1		
20	532221520024		Panel	1		
21	910200200033	1	Screw	2		
22	910400100005	1	Flat Washer	2		
23	532221520023		Mounting Plate	1		
24	920200400029		Proximity Switch	1		
25	910200500015	1	Screw	2		
26	921500100077		Cable	1		

02 Forks (540346038001)

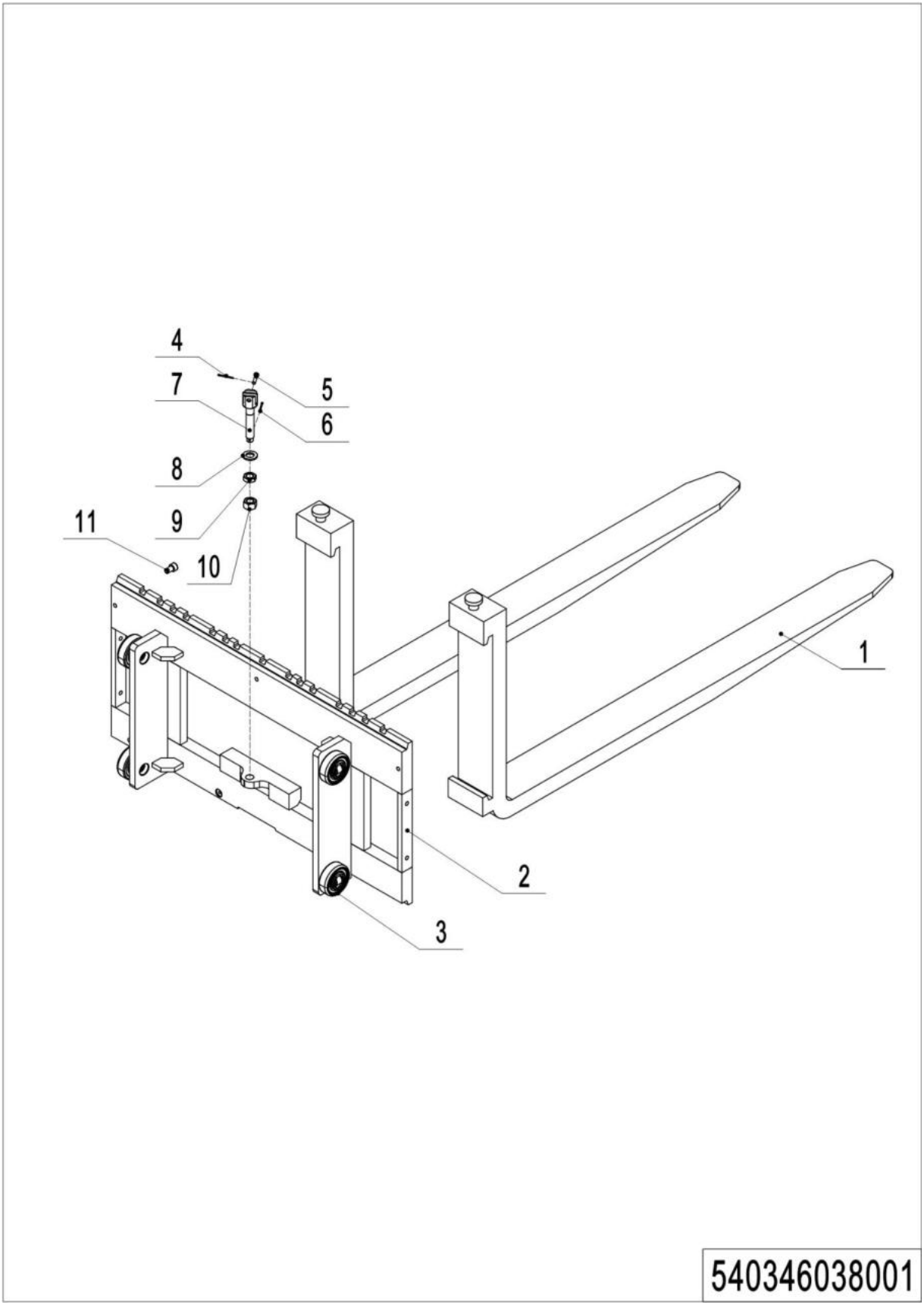

1=Supply as package; 2=Supply with limit; 3=Phasing out supply; 4=Supply as assembly; 5=Check other lists.

02 Forks (540346038001)

No.	Item Code	Mark	Item Description	Qty.	Substitute	Note
1	940100100045		Fork100x40x1150	2		
2	540338010001		Fork	1		
3	940200300001		Main Roller	4		
4	910600600015		Cotter Pin	1		
5	910600700028		Pin	1		
6	910600600036		Cotter Pin	1		
7	533243520008		Bolt	1		
8	910400100010		Washer	1		
9	910300400006		Nut	1		
10	910300200008		Nut	1		
11	910200200074		Screw	1		

04 Control panel assembly (20CE) (540246010001)

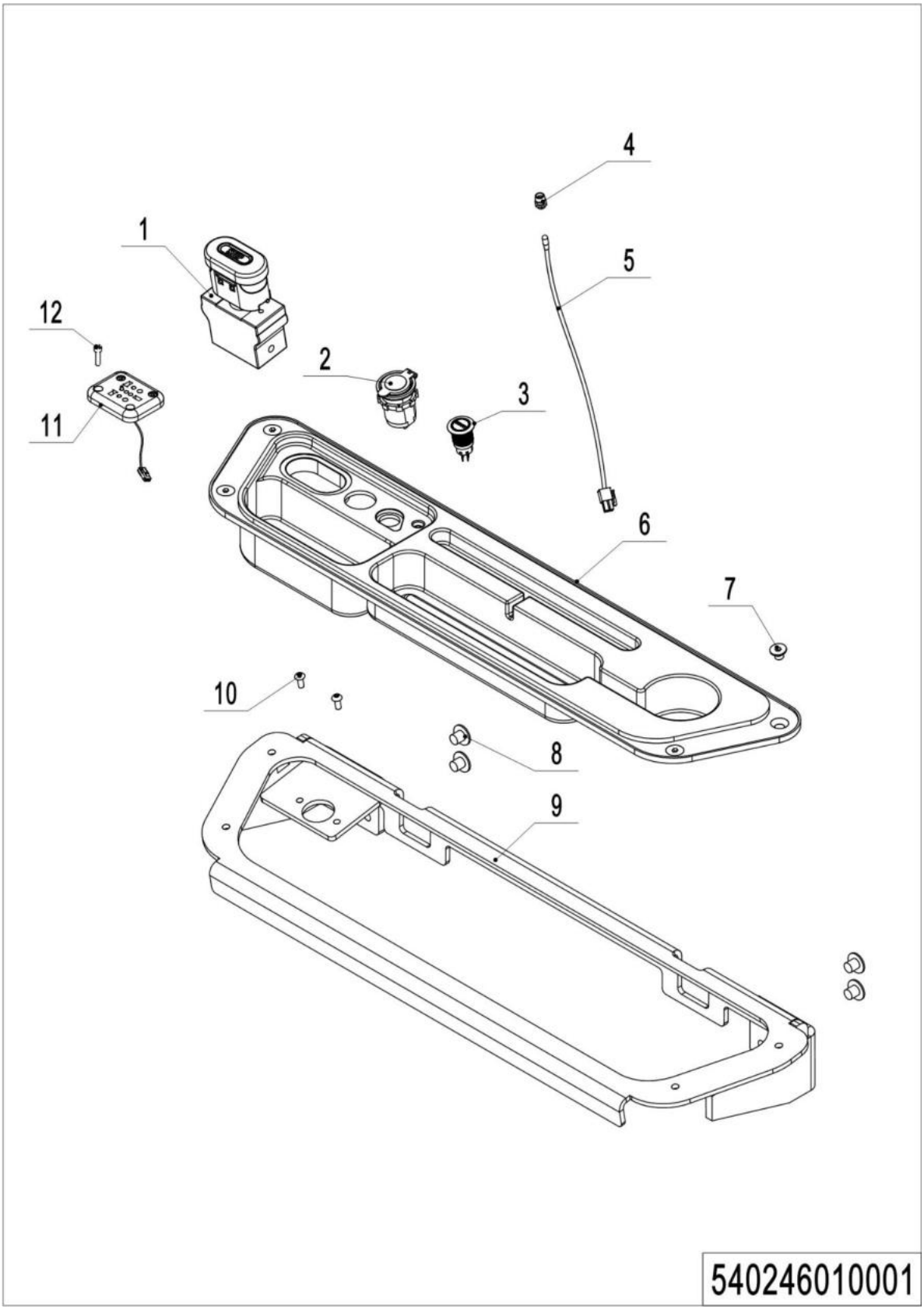

1=Supply as package; 2=Supply with limit; 3=Phasing out supply; 4=Supply as assembly; 5=Check other lists.

04 Control panel assembly (20CE) (540246010001)

No.	Item Code	Mark	Item Description	Qty.	Substitute	Note
1	920200100032		Emergency Button	1		
2	921000200859		USB interface	1		
3	532233010023		Button	1		
4	922000100024		Lamp Holder	1		
5	532298510006		Indicator Light	1		
6	532210020009		Bezel	1		
7	910200400023	1	Screw	4		
8	941100100005		Screw	4		
9	532210010001		Mounting Plate	1		
10	910200300012	1	Screw	2		
11	920400300024		Socket	1		
12	910200200015	1	Screw	3		

05 Control panel assembly (540246010002)

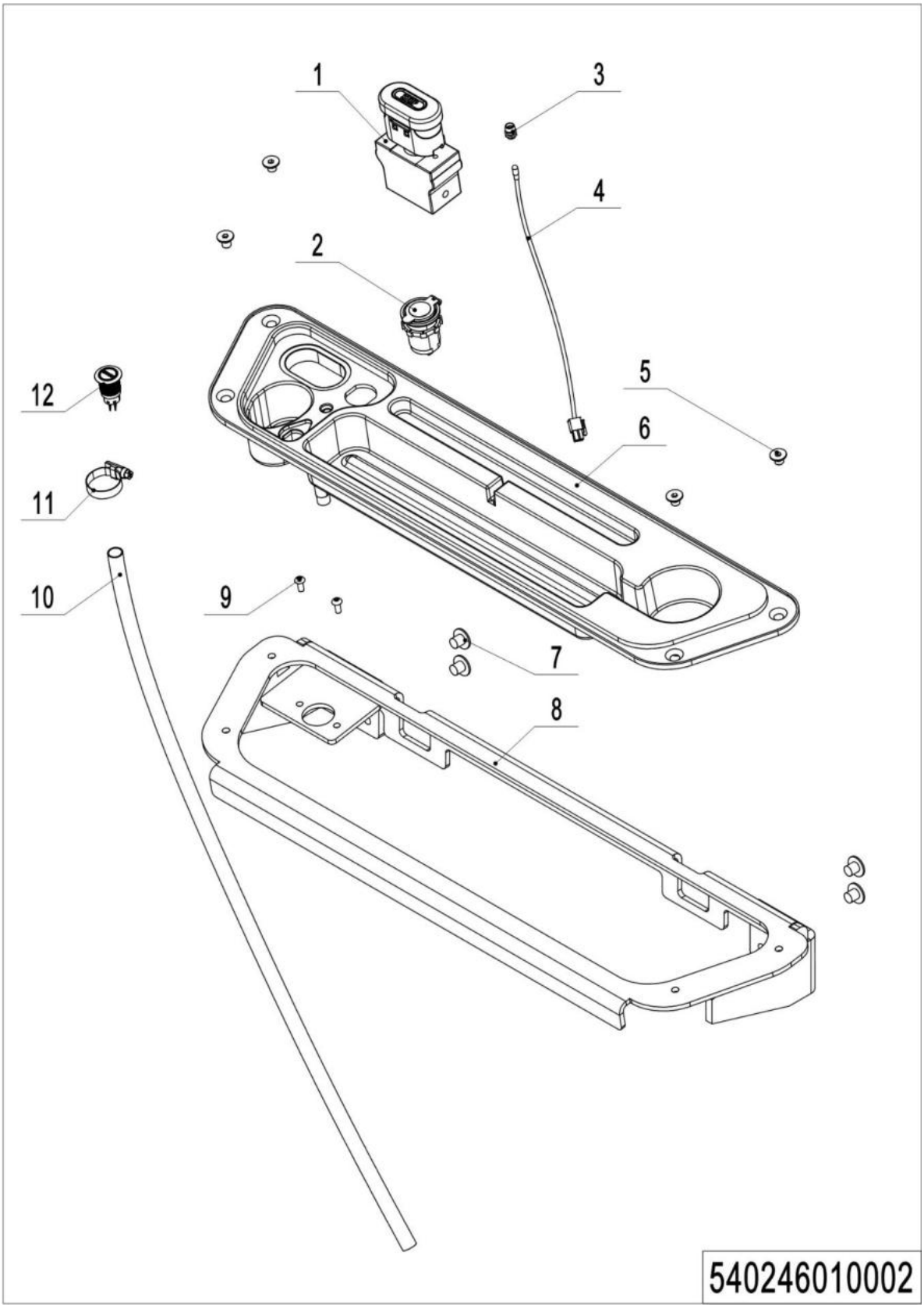

1=Supply as package; 2=Supply with limit; 3=Phasing out supply; 4=Supply as assembly; 5=Check other lists.

05 Control panel assembly (540246010002)

No.	Item Code	Mark	Item Description	Qty.	Substitute	Note
1	920200100032		Emergency Button	1		
2	921000200859		USB interface	1		
3	922000100024		Lamp Holder	1		
4	532298510006		Indicator Light	1		
5	910200400023	1	Screw	4		
6	532210020001		Bezel	1		
7	941100100005		Screw	4		
8	532210010001		Mounting Plate	1		
9	910200300012	1	Screw	2		
10	532210020008		Pipe	1		
11	911000600008		Hose Clamp	1		
12	532233010023		Button	1		

Chapter 4: Steering system, braking system and wheels

01 Tiller (532246011001)

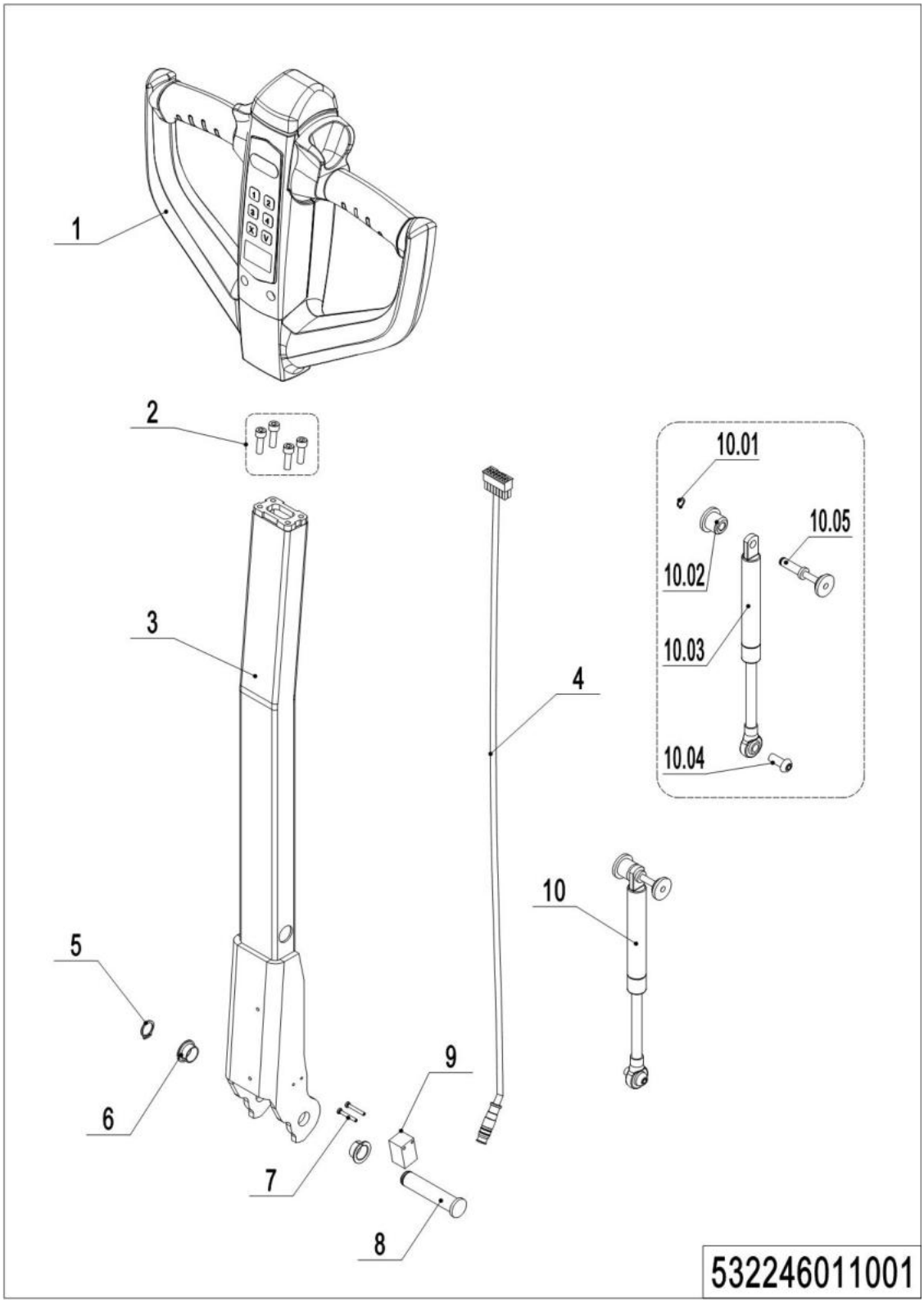

01 Tiller (532246011001）

No.	Item Code	Mark	Item Description	Qty.	Substitute	Note
1	922100100021		Tiller	1		
1	922100100028		Tiller	1		IC card
1	922100100116		Tiller	1		EN1175:2020
1	922100100117		Tiller	1		IC card, EN1175:2020
2	910200200036	1	Screw	4		
3	532211010000		Tiller	1		
4	532233010019		Wire Harness	1		
4	532233010041		Wire Harness	1		
5	910401300006		Circlip	1		
6	940500200001		Bushing	2		
7	941101100001	1	Screw	2		
8	508011020004		Pin	1		
9	505633510001		Proximity Switch	1		
10	532298510039		Air spring kits	1		
10.1	910401300001		Circlip	1		
10.2	508011020005		Fixing Base	1		
10.3	532211020003		Gas Spring	1		
10.4	941100100011	1	Screw	1		
10.5	508011010002		Pin	1		

02 Tiller head (532246011002)

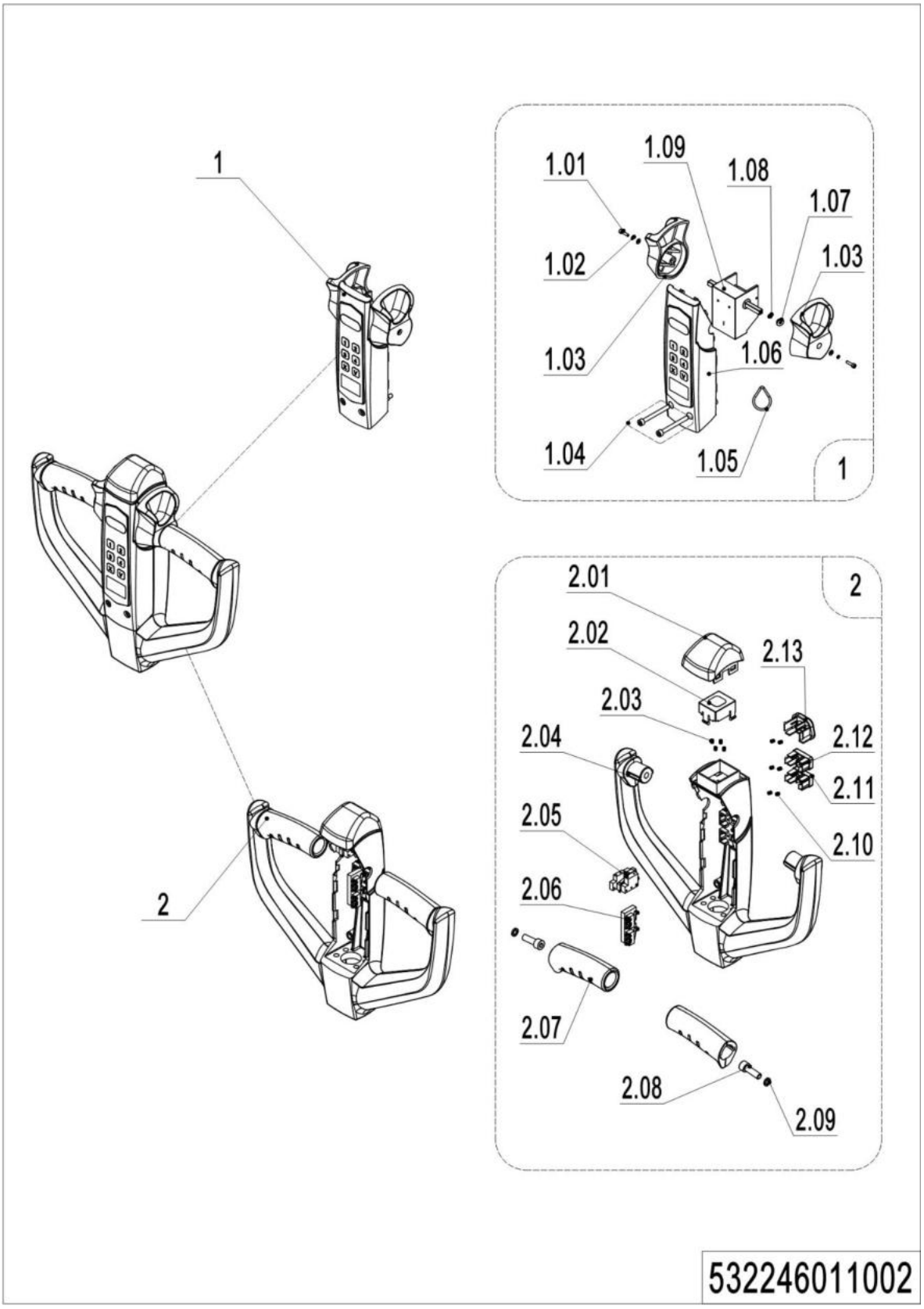

02 Tiller head (532246011002）

No.	Item Code	Mark	Item Description	Qty.	Substitute	Note
1	532298510022		Handle Cap Kit	1		
1	532298510023		Handle Cap Kit	1		IC card
1.01	910200200003	1	Screw	2		
1.02	910400500002	1	Spring Washer	2		
1.03	508098520044		Traction lever	1		Left and Right
1.04	910200200159	1	Screw	2		
1.05	508098520027		ID Card	1		With RFID card function
1.06	532298510054		Display Screen kit	1		
1.06	532298510055		Display Screen kit	1		IC card
1.07	508098520015		Bushing	2		
1.08	508098520016		Bushing	2		
1.09	532298510005		Accelerator	1		
1.09	532298510007		Accelerator	1		IC card
2	508098510031		Handle Cap Kit	1		
2.01	508098520018		Cap,Break Switch	1		
2.02	508098520019		Bracket	1		
2.03	502311020018		Spring	4		
2.04	508098520012		Handle Cap	1		
2.05	508098510029		Microswitch Kits	1		
2.06	508098510030		Microswitch Kits	1		
2.07	508098520013		Handle	2		
2.08	910200200058	1	Screw	2		
2.09	910400500006	1	Spring Washer	2		
2.10	502311020022		Spring	6		
2.11	508098520031		Button	1		
2.12	508098520030		Button	1		
2.13	508098520029		Horn Button	1		

03 Tiller head (DETONG) (EN1175:2020) (532246011012)

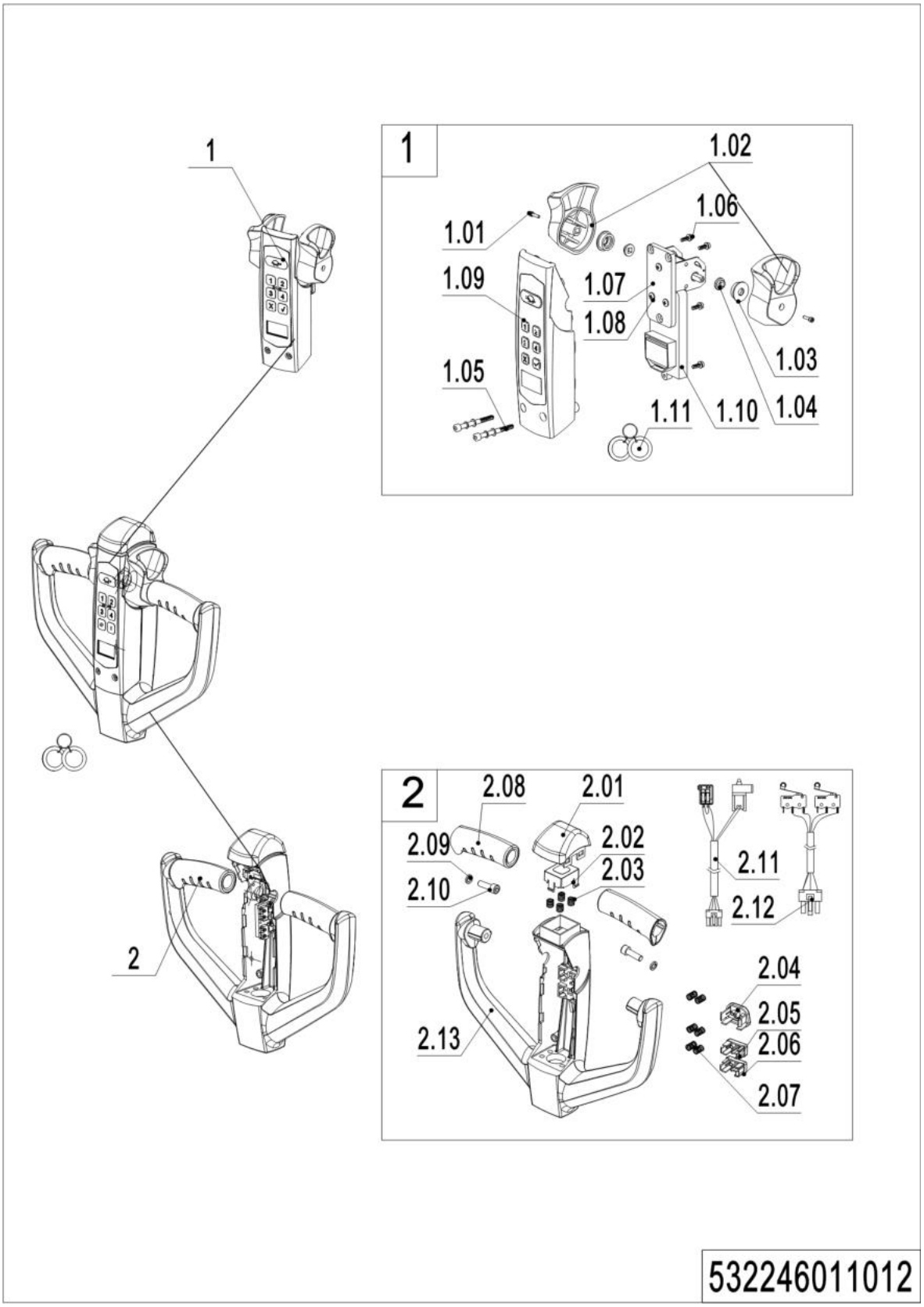

03 Tiller head (DETONG) (EN1175:2020) (532246011012）

No.	Item Code	Mark	Item Description	Qty.	Substitute	Note
1	532298510084		Handle Cap Kit	1		
1	532298510085		Handle Cap Kit	1		IC card
1.01	508098520086		Screw	1		
1.02	508098520044		Traction lever	1		
1.03	508098520015		Bushing	1		
1.04	508098520016		Bushing	1		
1.05	910200200159		Screw	2		
1.06	910200200013		Screw	4		
1.07	508098520084		Fixed plate	1		
1.08	910200500020		Screw	3		
1.09	532298510086		Handle Cap Kit	1		
1.09	532298510087		Handle Cap Kit	1		IC card
1.10	532298510088		Accelerator	1		
1.10	532298510089		Accelerator	1		IC card
1.11	508098520027		ID card	1		IC card
2	532298510094		Handle Cap Kit	1		
2.01	508098520018		Cap,Break Switch	1		
2.02	508098520019		Bracket	1		
2.03	502311020018		Spring	4		
2.04	508098520083		Horn Button	1		
2.05	508098520030		Button	1		
2.06	508098520031		Button	1		
2.07	502311020022		Spring	6		
2.08	508098520013		Handle	2		
2.09	910400500006		Spring Washer	2		
2.10	508598520100		Screw	2		
2.11	532298510072		Microswitch Kits	1		
2.12	532298510073		Microswitch Kits	1		
2.13	532298510095		Handle Cap	1		

04 Tiller head (SHIJIA) (EN1175:2020) (532246011013)

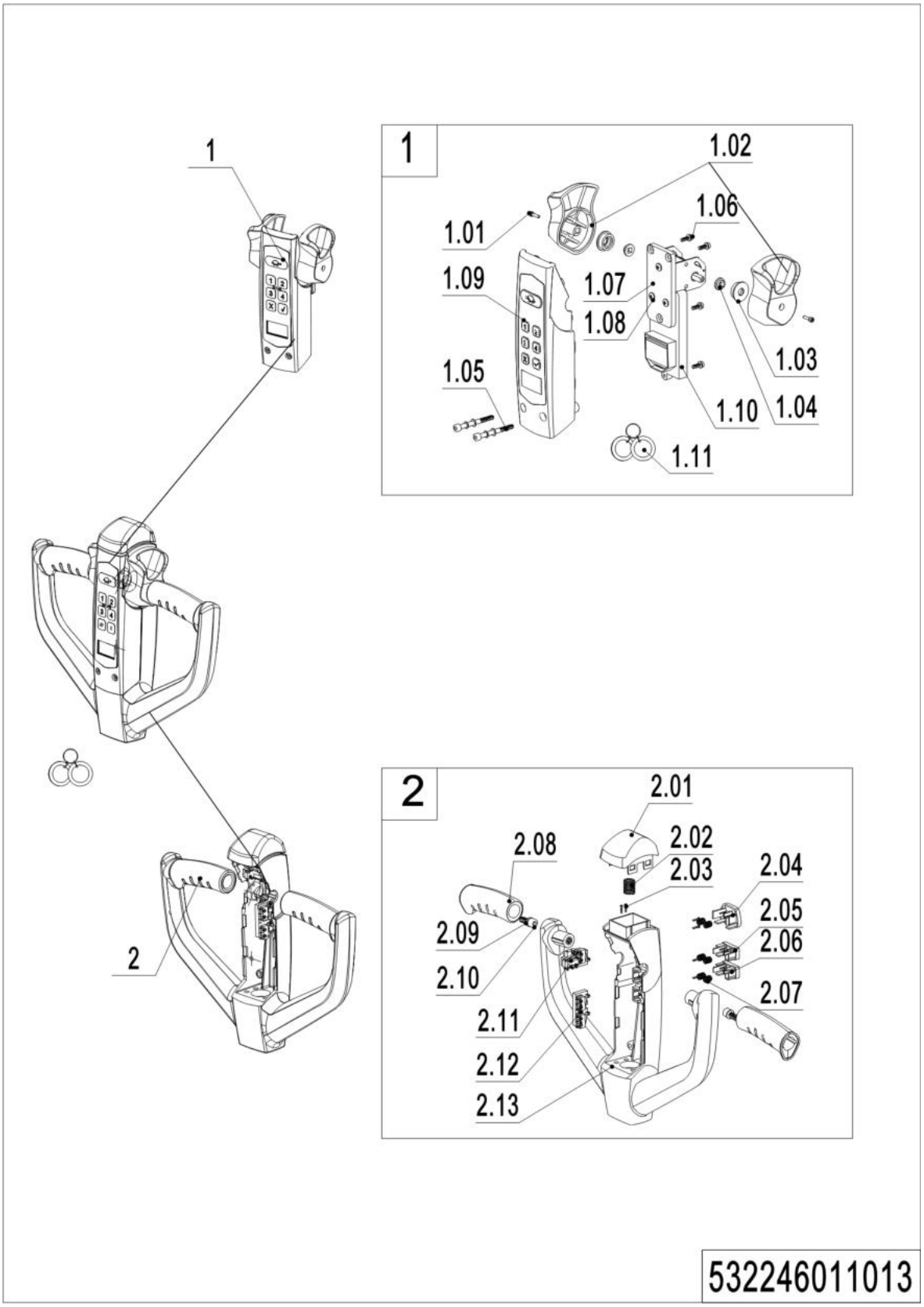

04 Tiller head (SHIJIA) (EN1175:2020) (532246011013）

No.	Item Code	Mark	Item Description	Qty.	Substitute	Note
1	532298510090		Handle Cap Kit	1		
1	532298510091		Handle Cap Kit	1		IC card
1.01	508098520086		Screw	1		
1.02	508098520044		Traction lever	1		
1.03	508098520015		Bushing	1		
1.04	508098520016		Bushing	2		
1.05	910200200159		Screw	4		
1.06	910200200013		Screw	1		
1.07	508098520084		Fixed plate	3		
1.08	910200500020		Screw	1		
1.09	532298510086		Handle Cap Kit	1		
1.09	532298510087		Handle Cap Kit	1		IC card
1.10	532298510092		Accelerator	1		
1.10	532298510093		Accelerator	1		IC card
1.11	508098520027		ID card	1		IC card
2	532298510096		Handle Cap Kit	1		
2.01	508098520018		Bracket	1		
2.02	502311020018		Spring	4		
2.03	532298510076		Screw	6		
2.04	508098520083		Horn Button	1		
2.05	508098520030		Button	1		
2.06	508098520031		Button	1		
2.07	502311020022		Spring	6		
2.08	508098520013		Handle	2		
2.09	910400500006		Spring Washer	2		
2.10	508598520100		Screw	2		
2.11	532298510074		Microswitch Kits	1		
2.12	532298510075		Microswitch Kits	1		
2.13	532298510097		Handle Cap	1		

05 Load wheel (536746017001)

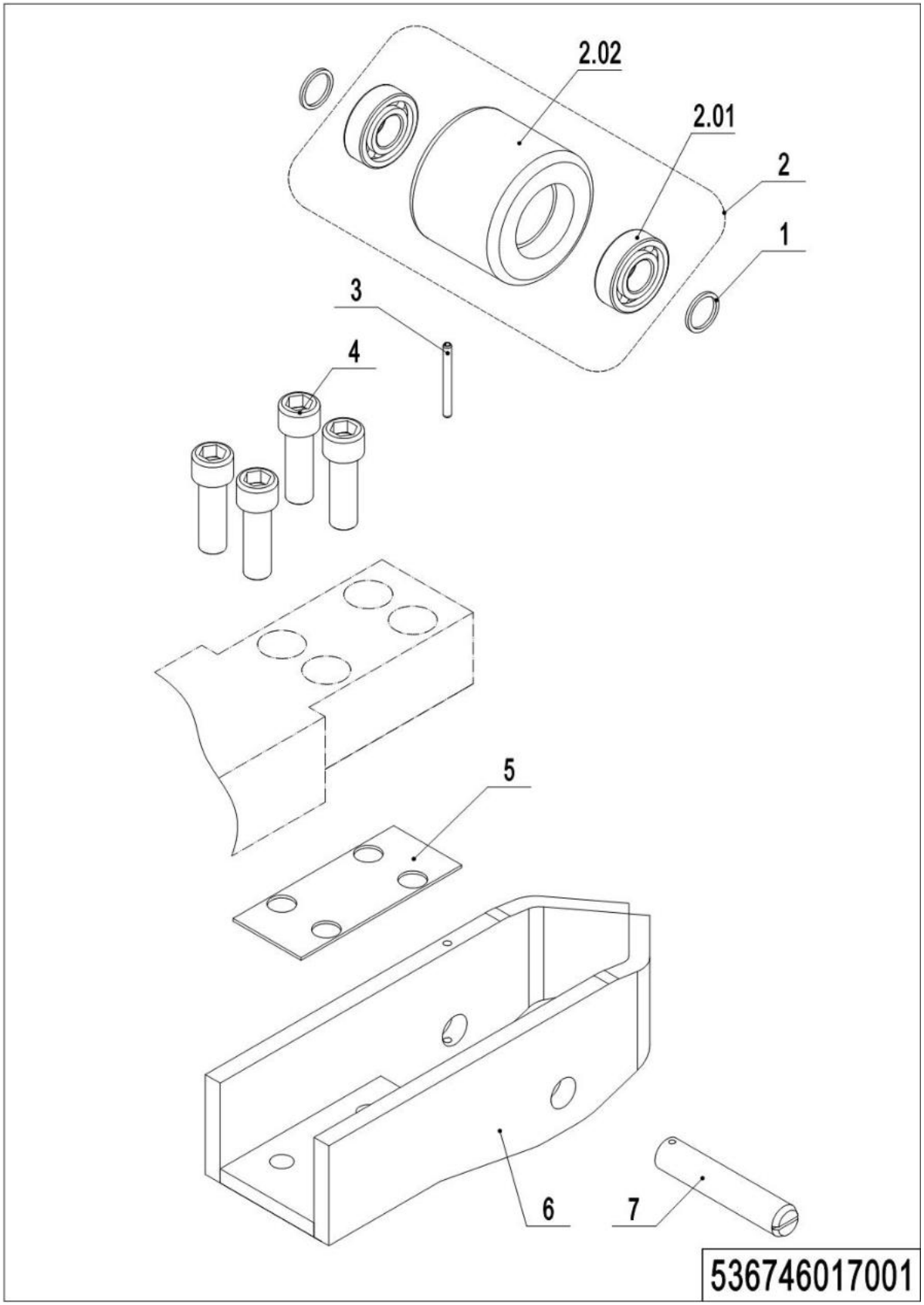

05 Load wheel (536746017001)

No.	Item Code	Mark	Item Description	Qty.	Substitute	Note
1	940600500053		Washer	4		
2	532998510000		Wheel	2		
2.01	910700200019		Bearing	4		
2.02	940300300009		WheelΦ84x70	2		
3	910600400030	1	Spring Pin	2		
4	910200200123	1	Screw	8		
5	536717020001		Pad	2		
6	536717010001		Wheel Carrier	2		
7	536717020002		Axle	2		

06 Side wheel (536746016501)

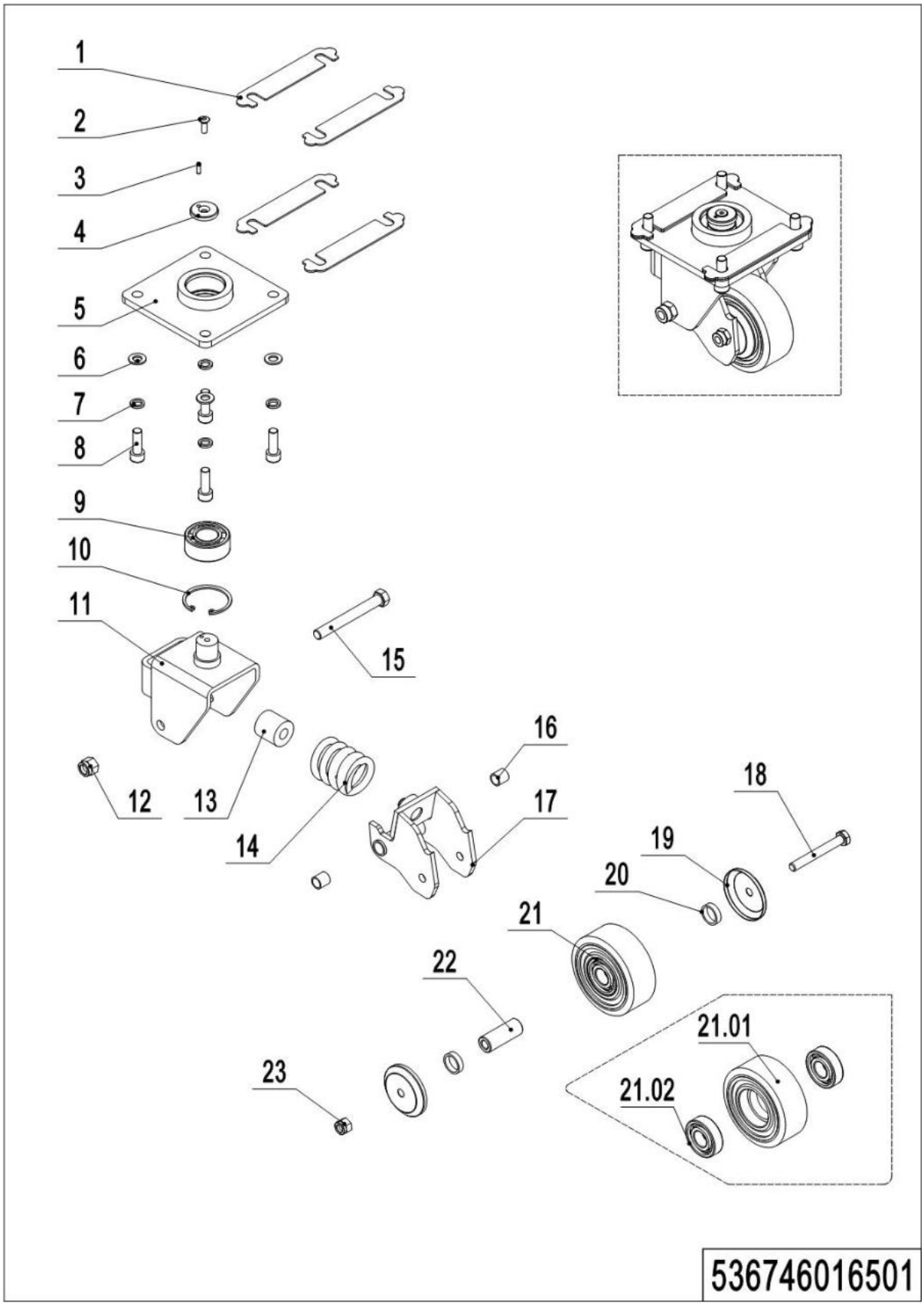

06 Side wheel (536746016501)

No.	Item Code	Mark	Item Description	Qty.	Substitute	Note
--	536716510000		Caster Assembly	2		
1	536716520001		Adjustment Pad	8		
2	941100300001	1	Screw	2		
3	910600100004	1	Cylindrical Pin	2		
4	505616520007		Retaining Ring	2		
5	536716510002		Plate	2		
6	910400100007	1	Flat Washer	8		
7	910400500007	1	Spring Washer	8		
8	910200200077	1	Screw	8		
9	910700500002		Bearing	2		
10	910401400016		Circlip	2		
11	536716510003		Wheel Carrier	2		
12	910300500006	1	Nut	2		
13	505616520000		Spring	2		
14	940400500006		Spring	2		
15	941100200002	1	Bolt	2		
16	940500100002		Bushing	4		
17	536716510001		Whirling Arm	2		
18	910100100038	1	Bolt	2		
19	505616520011		Dust Cap	4		
20	505616520012		Check Ring	4		
21	503598510003		Caster Assembly	2		
21.01	940300300018		Wheel Φ100x40	2		
21.02	910700200019		Bearing	4		
22	505616520013		Bushing	2		
23	910300500005	1	Nut	2		

07 Manual steering (Chain) (536746031202)

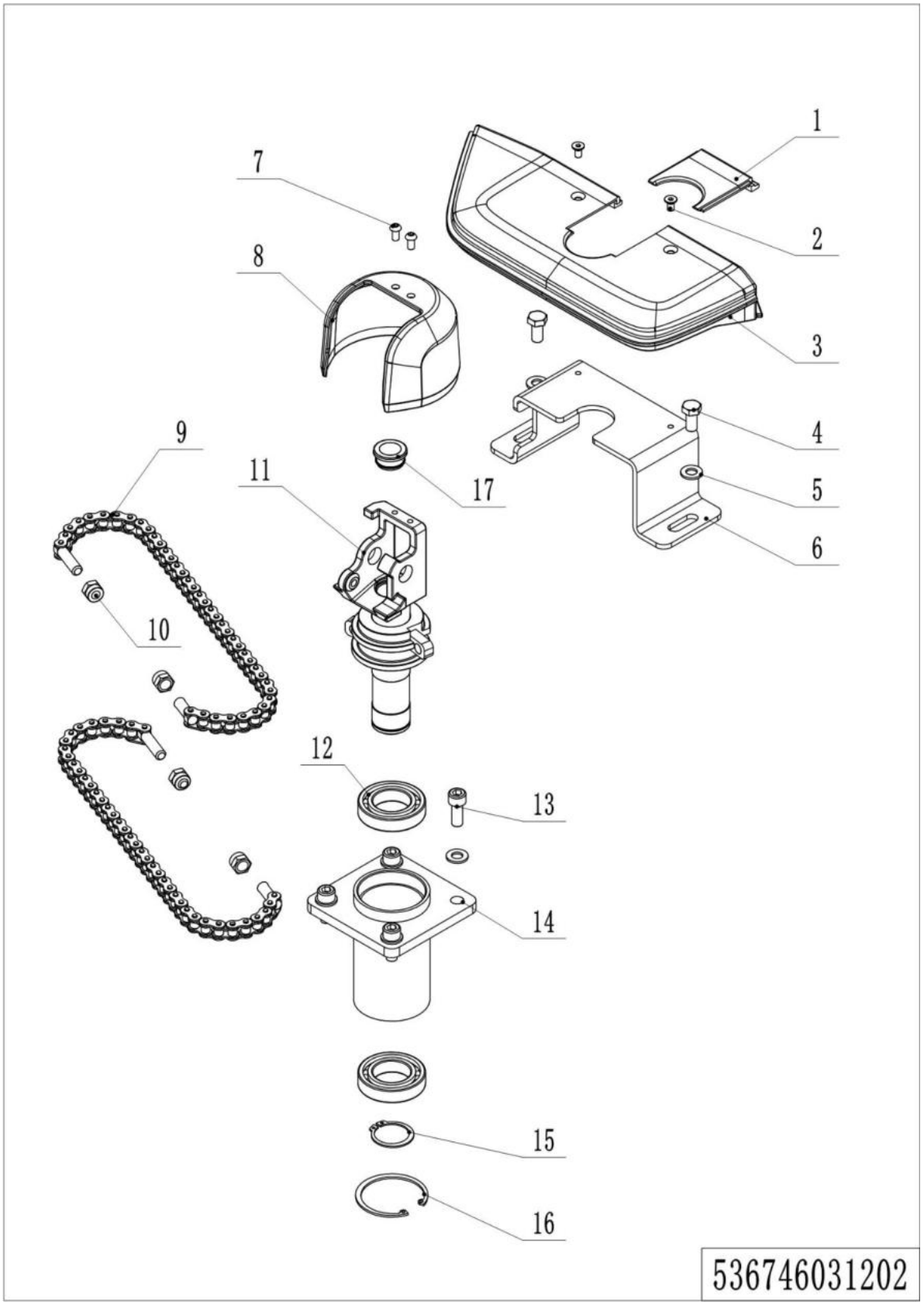

07 Manual steering (Chain) (536746031202)

No.	Item Code	Mark	Item Description	Qty.	Substitute	Note
1	532231220011		Handle Cap	1		
2	910200400016	1	Screw	2		
3	532231220010		Handle Cap	1		
4	910100300035	1	Bolt	2		
5	910400100007	1	Flat Washer	6		
6	532231220008		Pedestal	1		
7	910200300017	1	Screw	2		
8	532211020001		Protective Cover	1		
9	536731210008		Wirerope	2		
10	910300500005		Nut	4		
11	536731210006		handle Spindle	1		
12	910700200007		Bearing	2		
13	910200200076	1	Screw	4		
14	536731210003		Bracket	1		
15	910401300018	1	Circlip	1		
16	910401400018	1	Circlip	1		

Chapter 5: Mast system

01 Two stage mast Free Lift (540246043501)

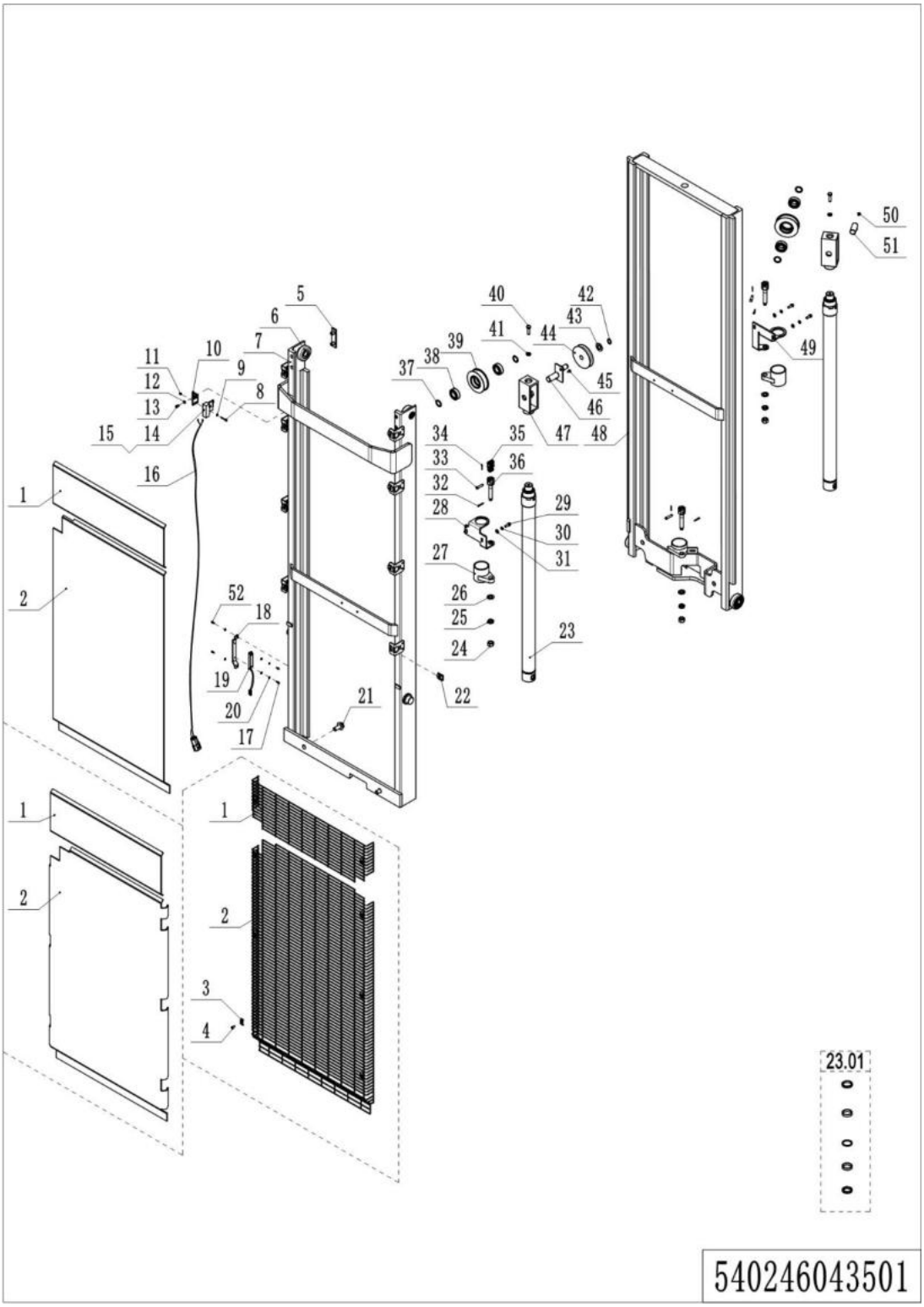

01 Two stage mast Free Lift (540246043501)

No.	Item Code	Mark	Item Description	Qty.	Substitute	Note
1	532244020030		Guard Plate	1		
1	532251520005		Protective Frame	1		
2	532244020038		Guard Plate	1		2600
2	532244020034		Guard Plate	1		2900
2	532244020033		Guard Plate	1		3200
2	532244020031		Guard Plate	1		3600
2	532244021003		Guard Plate	1		2600
2	532244021002		Guard Plate	1		2900
2	532244021004		Guard Plate	1		3200
2	532244021001		Guard Plate	1		3600
2	532251520004		Protective Frame	1		2600
2	532251520003		Protective Frame	1		2900
2	532251520002		Protective Frame	1		3200
2	532251520001		Protective Frame	1		3600
3	320443020321		Plate	8		Protective Frame
3	320443020321		Plate	6		Protective Frame, 2600
4	910200300018		Screw M6x12	8		Protective Frame
4	910200300018		Screw M6x12	6		Protective Frame, 2600
5	255044020131		Pad	2		
6	940200300003		Composite rollers	4		
7	540243510010		Outer Mast	1		2600
7	540243510009		Outer Mast	1		2900
7	540243510008		Outer Mast	1		3200
7	540243510001		Outer Mast	1		3600
8	910200500028	1	Screw M4x30	2		
9	910400100003	1	Washer 4	6		
10	532244020012		Plate	1		
11	910300500001	1	Nut M4	2		
12	910400100005	1	Washer 6	4		
13	910200200032	1	Screw M6x10	2		

01 Two stage mast Free Lift (540246043501) continuation

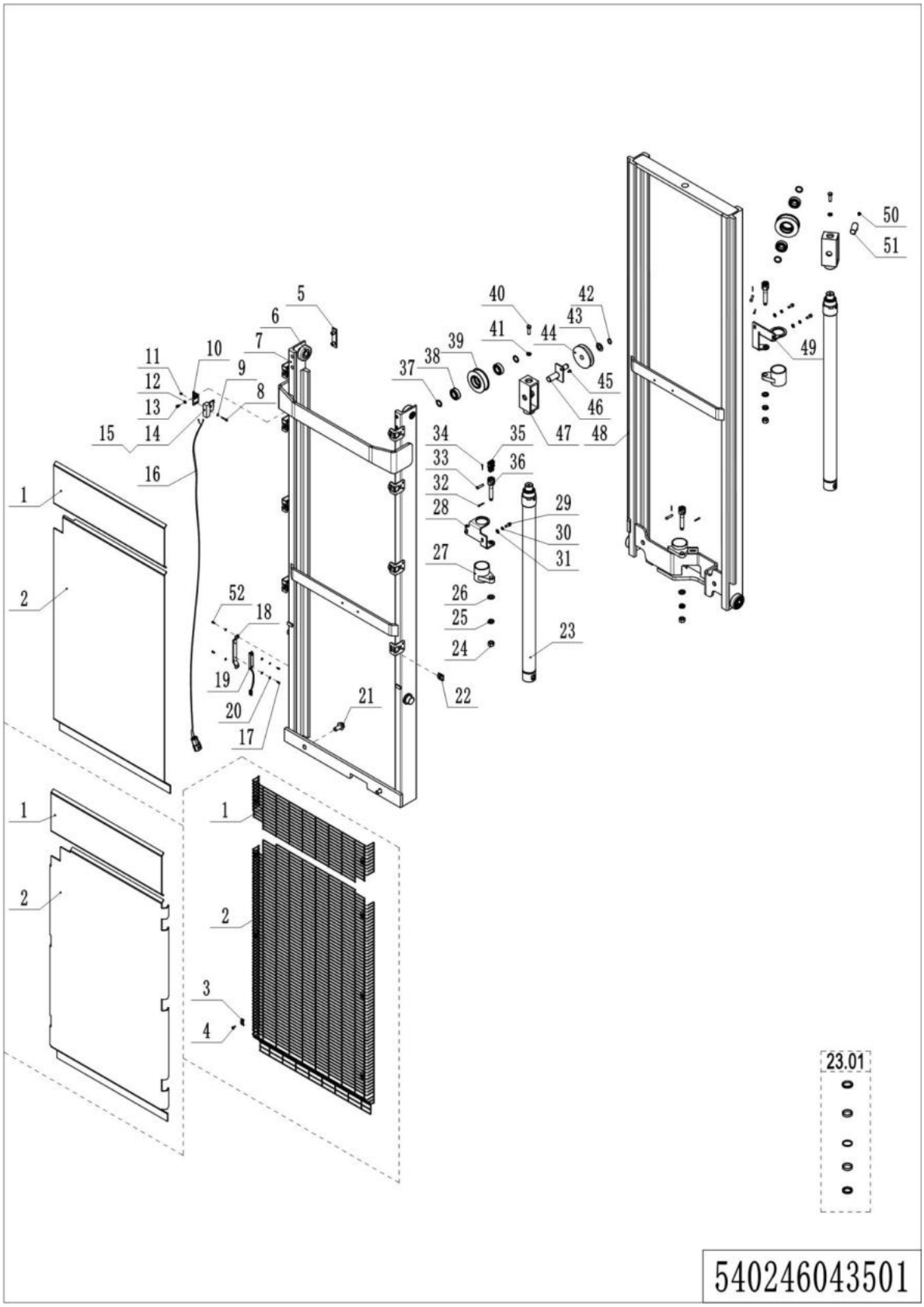

01 Two stage mast Free Lift (540246043501) continuation

No.	Item Code	Mark	Item Description	Qty.	Substitute	Note
14	920200300003		Microswitches	1		
15	920200300007		Protective cover	1		
16	540233010006		Wiring harnesses	1		
17	910200200013		Screw M4x10	2		
18	534744520080		Protective cover	1		
19	540233510001		Magnetic switches	1		
20	910400500003		Spring-pads 4	2		
21	910100800005		Screw M16x35	2		
22	940400300001		Snap fastening	8		Guard Plate
22	940400300001		Snap fastening	6		Guard Plate, 2600
22	940400400001		Snap fastening	8		Protective Frame
22	940400400001		Snap fastening	6		Protective Frame, 2600
23	540243510013		Cylinder	2		2600
23	540243510012		Cylinder	2		2900
23	540243510011		Cylinder	2		3200
23	540243510003		Cylinder	2		3600
23.01	540298510002		Seal Kit	2		
24	910300200008		Nut M16x1.5	3		
25	910300400006		Nut M16x1.5	3		
26	910400100010		Washer 16	3		
27	540243510014		Tie rod seat welding	2		
28	540243520015		bracket	1		2600
28	540243520013		bracket	1		2900,3200,3600
29	910200200057		Screw M8x20	4		
30	910400500006		Spring-pads 8	4		
31	910400100006		Washer 8	4		
32	910600600034		Cotter pins	3		
33	941100800007		Pin shaft	3		
34	910600600015		Cotter pins	3		
35	540243510018		Chain	1		2600

01 Two stage mast Free Lift (540246043501) continuation

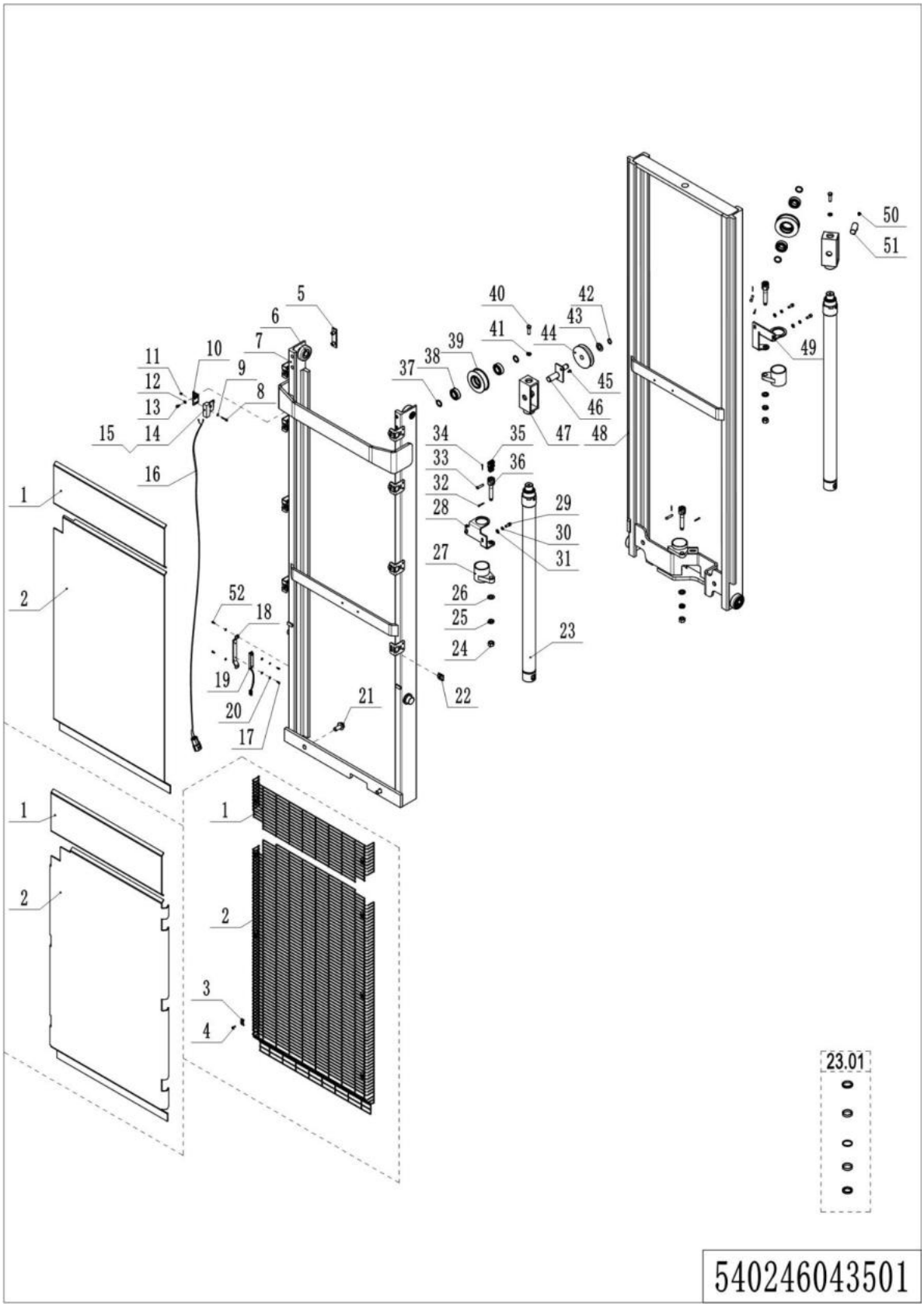

01 Two stage mast Free Lift (540246043501) continuation

No.	Item Code	Mark	Item Description	Qty.	Substitute	Note
35	533243510031		Chain	1		2900
35	533243510009		Chain	1		3200
35	540243510016		Chain	1		3600
36	533243520008		Screw	3		
37	940600500006		Washer	4		
38	910700200020		bearing	4		
39	940200400002		Sprocket	2		
40	910100300049		Screw M12x25	2		
41	910400500008		Spring-pads 12	2		
42	910401300011		Retaining rings 20	1		
43	910400100012		Washer 20	1		
44	532643520132		pulley	1		
45	910200300017		Screw M6x12	1		
46	540243510004		axis	1		
47	532243010002		Sprocket holder	2		
48	540243510007		Inner Mast	1		2600
48	540243510006		Inner Mast	1		2900
48	540243510005		Inner Mast	1		3200
48	540243510002		Inner Mast	1		3600
49	540243520014		bracket	1		
50	910200400016		Screw M6x12	1		
51	533243510005		axis	1		
52	910100300120		Screw M4x10	2		

Chapter 6: Electrical parts and wire harness

01 Wire harness (532246033001)

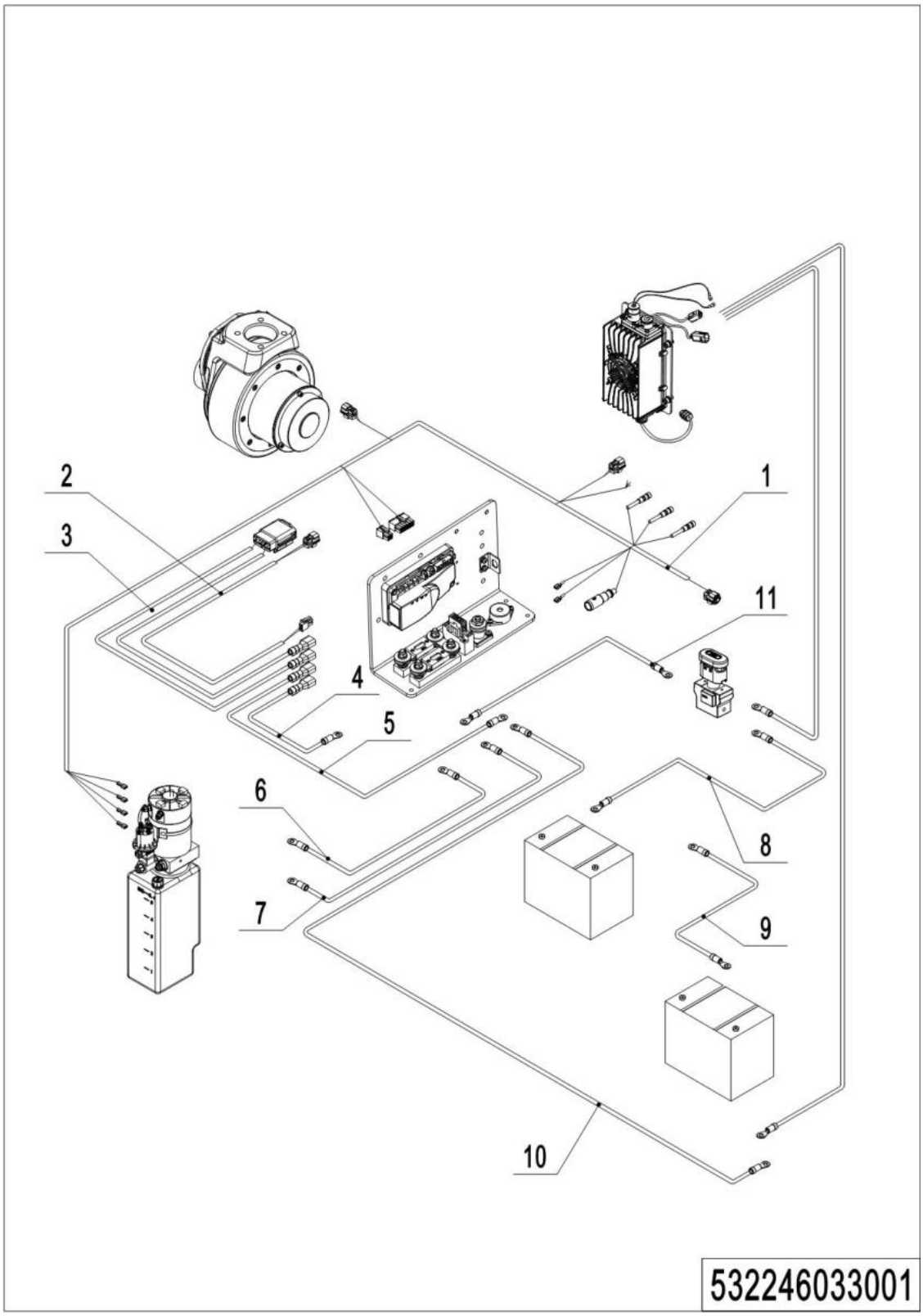

1=Supply as package; 2=Supply with limit; 3=Phasing out supply; 4=Supply as assembly; 5=Check other lists.

01 Wire harness (532246033001)

No.	Item Code	Mark	Item Description	Qty.	Substitute	Note
1	532233010000		Wire Harness	1		
2	532233010003		Wire Harness	1		
3	532233010004		Wire Harness	1		
4	532233010005		Cables	1		
5	532233010006		Cables	1		
6	532233010007		Cable	1		
7	532233010009		Cable	1		
8	532233010010		Cable	1		85AH
8	532233010013		Cable	1		106AH
9	532233010011		Cable	1		85AH
9	532233010014		Cable	1		106AH
10	532233010012		Cable	1		85AH
10	532233010015		Cable	1		106AH
11	532233010016		Cable	1		

02 Wire harness (EN1175:2020) (532246033010)

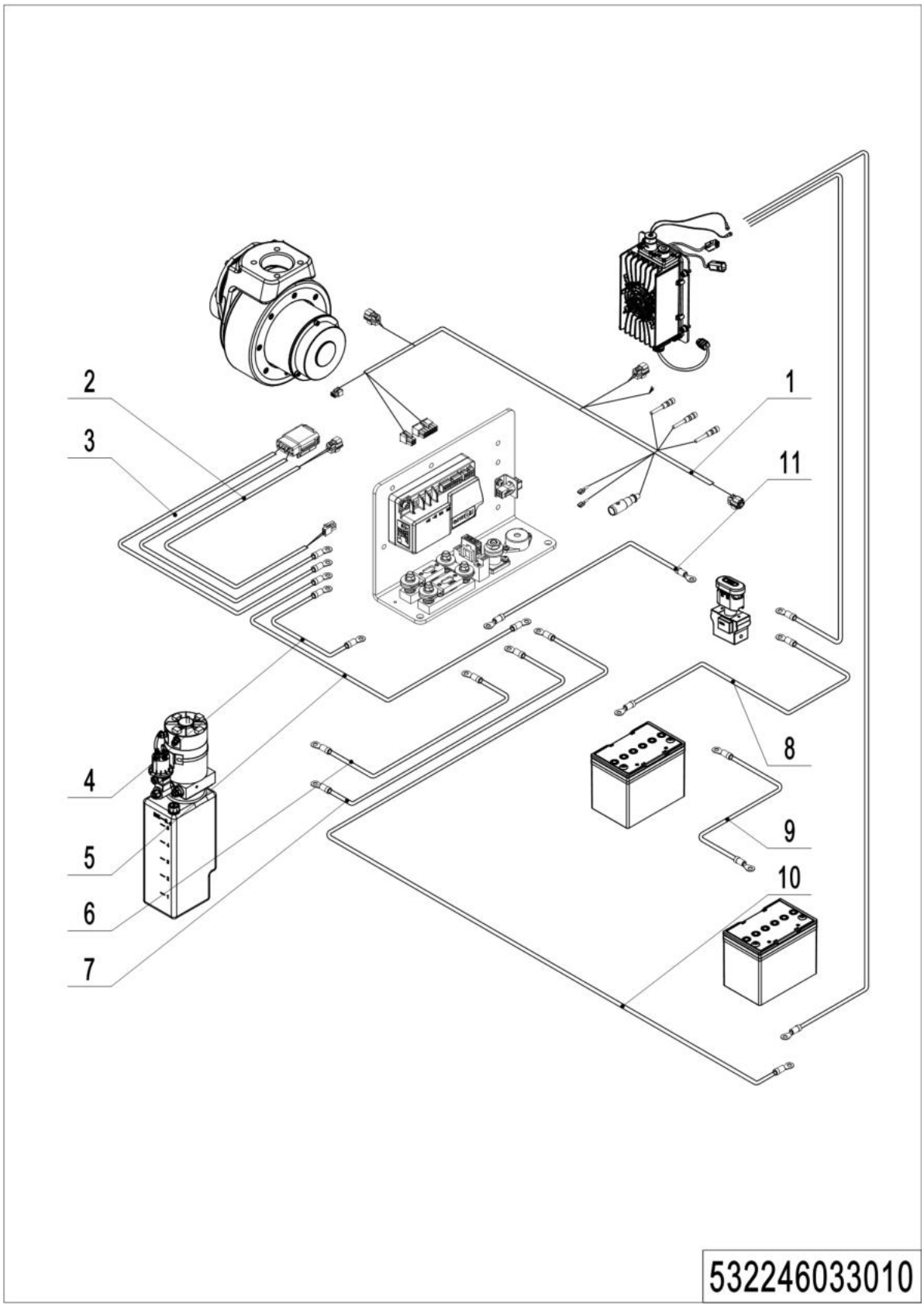

1=Supply as package; 2=Supply with limit; 3=Phasing out supply; 4=Supply as assembly; 5=Check other lists.

02 Wire harness (EN1175:2020) (532246033010)

No.	Item Code	Mark	Item Description	Qty.	Substitute	Note
1	532233010032		Wire Harness	1		
2	532233010035		Wire Harness	1		
3	532233010036		Wire Harness	1		
4	532233010037		Cables	1		
5	532233010038		Cables	1		
6	532233010007		Cable	1		
7	532233010009		Cable	1		
8	532233010010		Cable	1		85AH
8	532233010013		Cable	1		106AH
9	532233010011		Cable	1		85AH
9	532233010014		Cable	1		106AH
10	532233010012		Cable	1		85AH
10	532233010015		Cable	1		106AH
11	532233010016		Cable	1		

03 Wire harness (lithium battery) (532246033002)

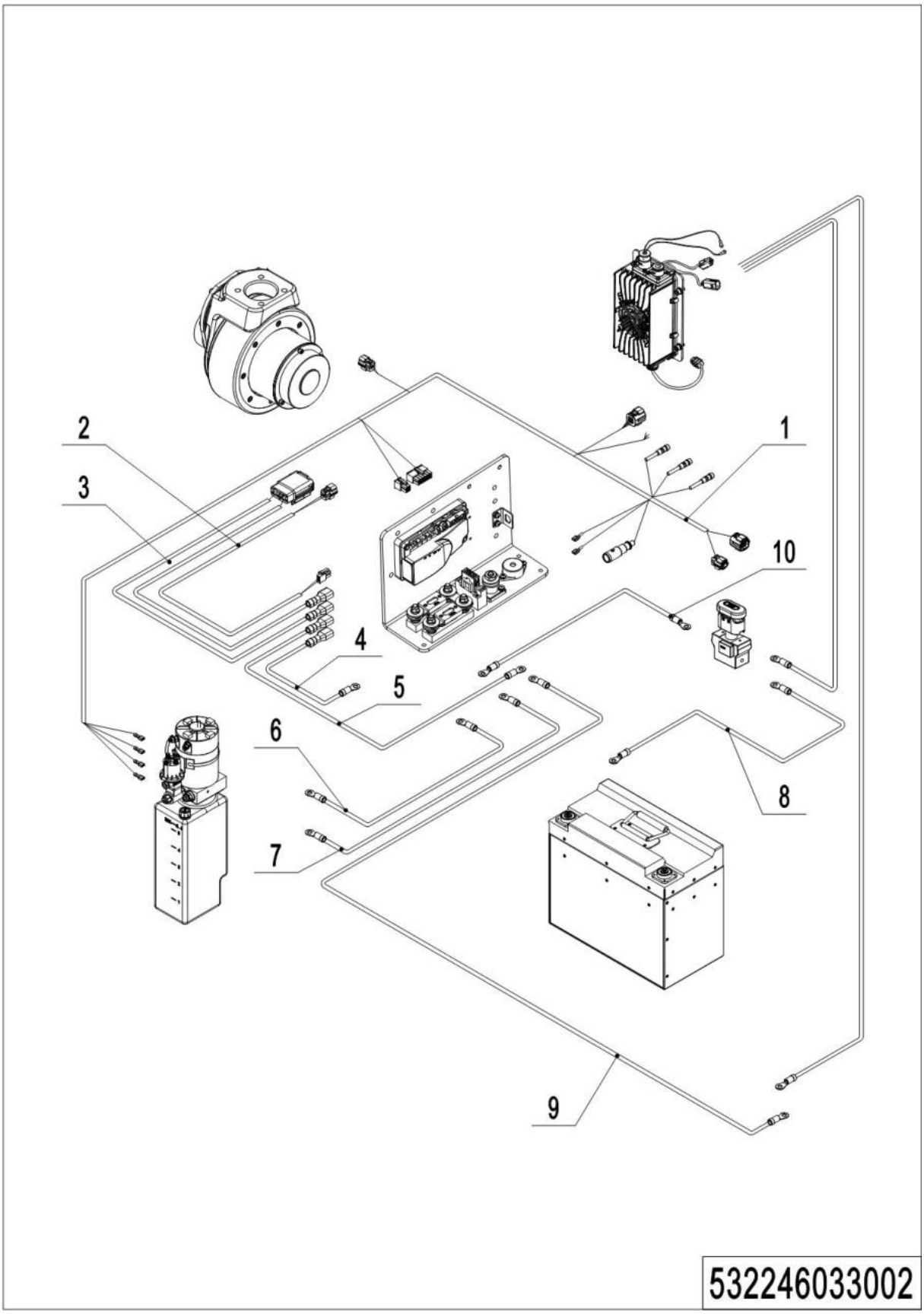

1=Supply as package; 2=Supply with limit; 3=Phasing out supply; 4=Supply as assembly; 5=Check other lists.

03 Wire harness (lithium battery) (532246033002)

No.	Item Code	Mark	Item Description	Qty.	Substitute	Note
1	532233010001		Wire Harness	1		
2	532233010003		Wire Harness	1		
3	532233010004		Wire Harness	1		
4	532233010005		Cables	1		
5	532233010006		Cables	1		
6	532233010007		Cable	1		
7	532233010009		Cable	1		
8	532233010020		Cable	1		
9	532233010021		Cable	1		
10	532233010016		Cable	1		

04 Wire harness (lithium battery, EN1175:2020) (532246033011)

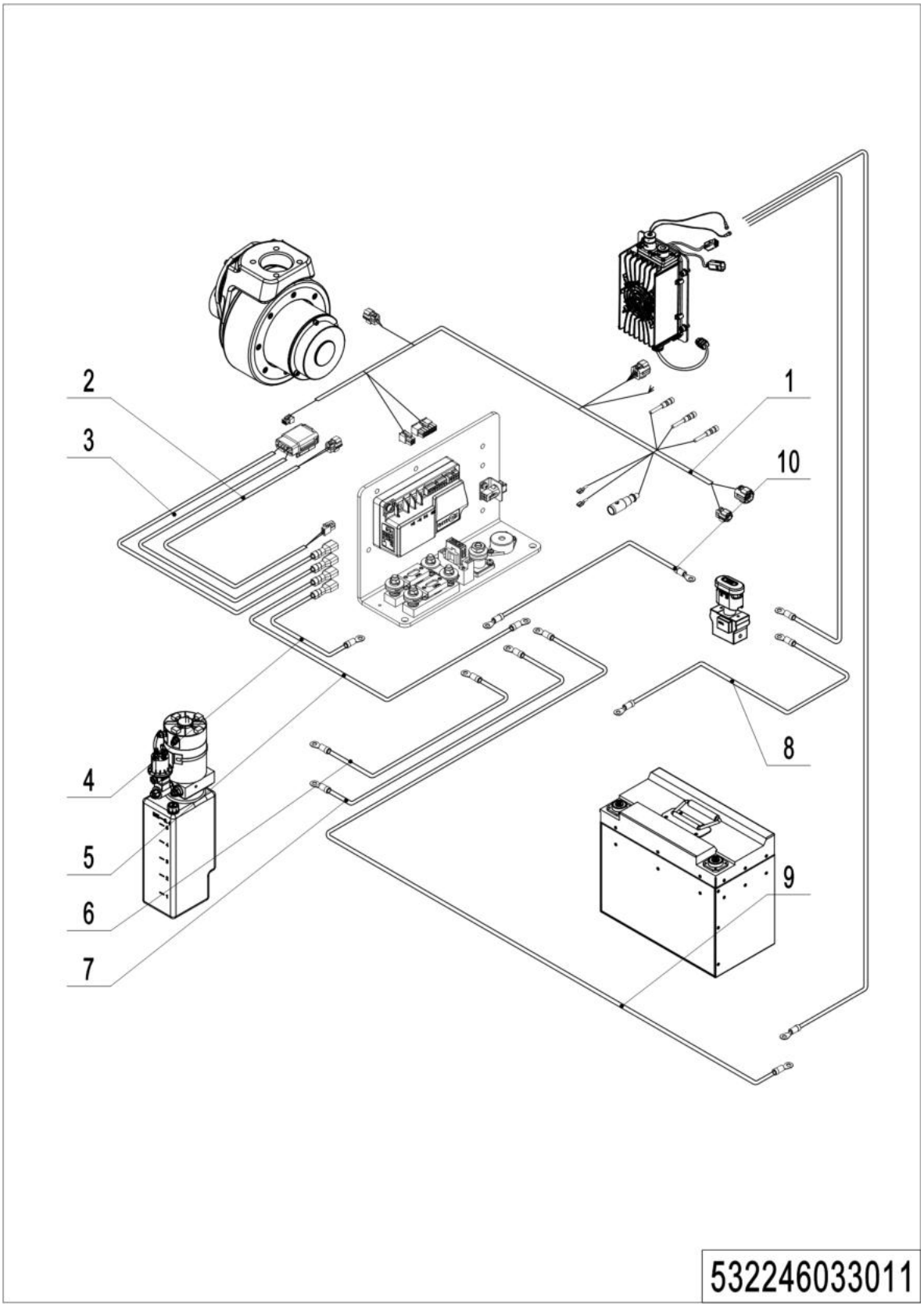

1=Supply as package; 2=Supply with limit; 3=Phasing out supply; 4=Supply as assembly; 5=Check other lists.

04 Wire harness (lithium battery, EN1175:2020) (532246033011)

No.	Item Code	Mark	Item Description	Qty.	Substitute	Note
1	532233010042		Wire Harness	1		
2	532233010035		Wire Harness	1		
3	532233010036		Wire Harness	1		
4	532233010037		Cables	1		
5	532233010038		Cables	1		
6	532233010007		Cable	1		
7	532233010009		Cable	1		
8	532233010020		Cable	1		
9	532233010021		Cable	1		
10	532233010016		Cable	1		

05 Electrical control unit (536746033003)

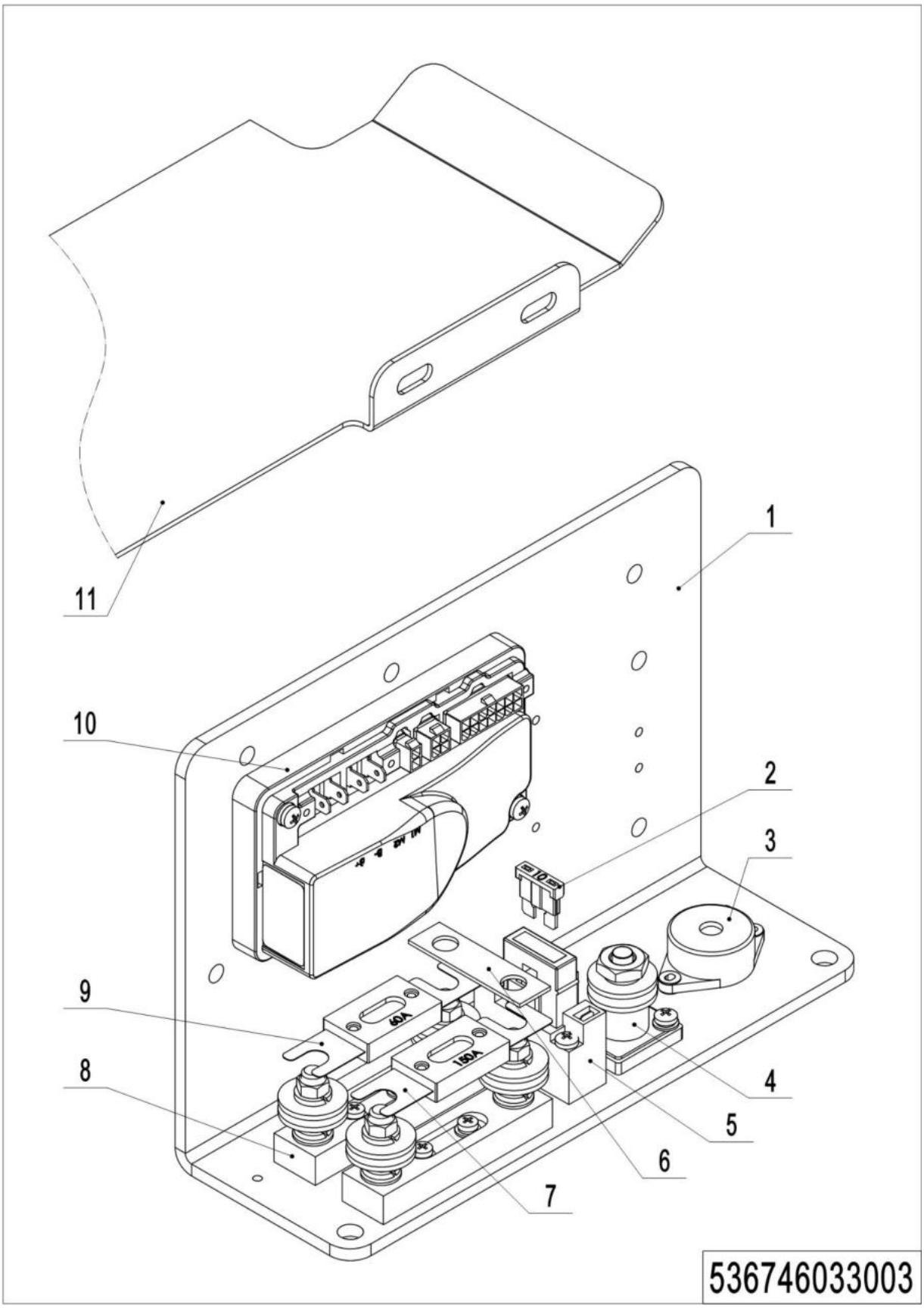

1=Supply as package; 2=Supply with limit; 3=Phasing out supply; 4=Supply as assembly; 5=Check other lists.

05 Electrical control unit (536746033003)

No.	Item Code	Mark	Item Description	Qty.	Substitute	Note
1	532233020001		Mounting Plate	1		
2	920100200002		Fuse	1		
3	920500100007		Horn	1		
4	920100400001		Fuse Holder	1		
5	920100400006		Fuse Holder	1		
6	505633020003		Copper Busbar	1		
7	920100100007		Fuse	1		
8	920100400002		Fuse Holder	2		
9	920100100003		Fuse	1		
10	921400100081		Controller	1		
10	921400100174		Controller	1		EN1175:2020
11	536712520008		Baffle	1		lead-acid battery
11	536712520009		Baffle	1		Lithium battery

06 Charger (lead-acid battery) (532246036501)

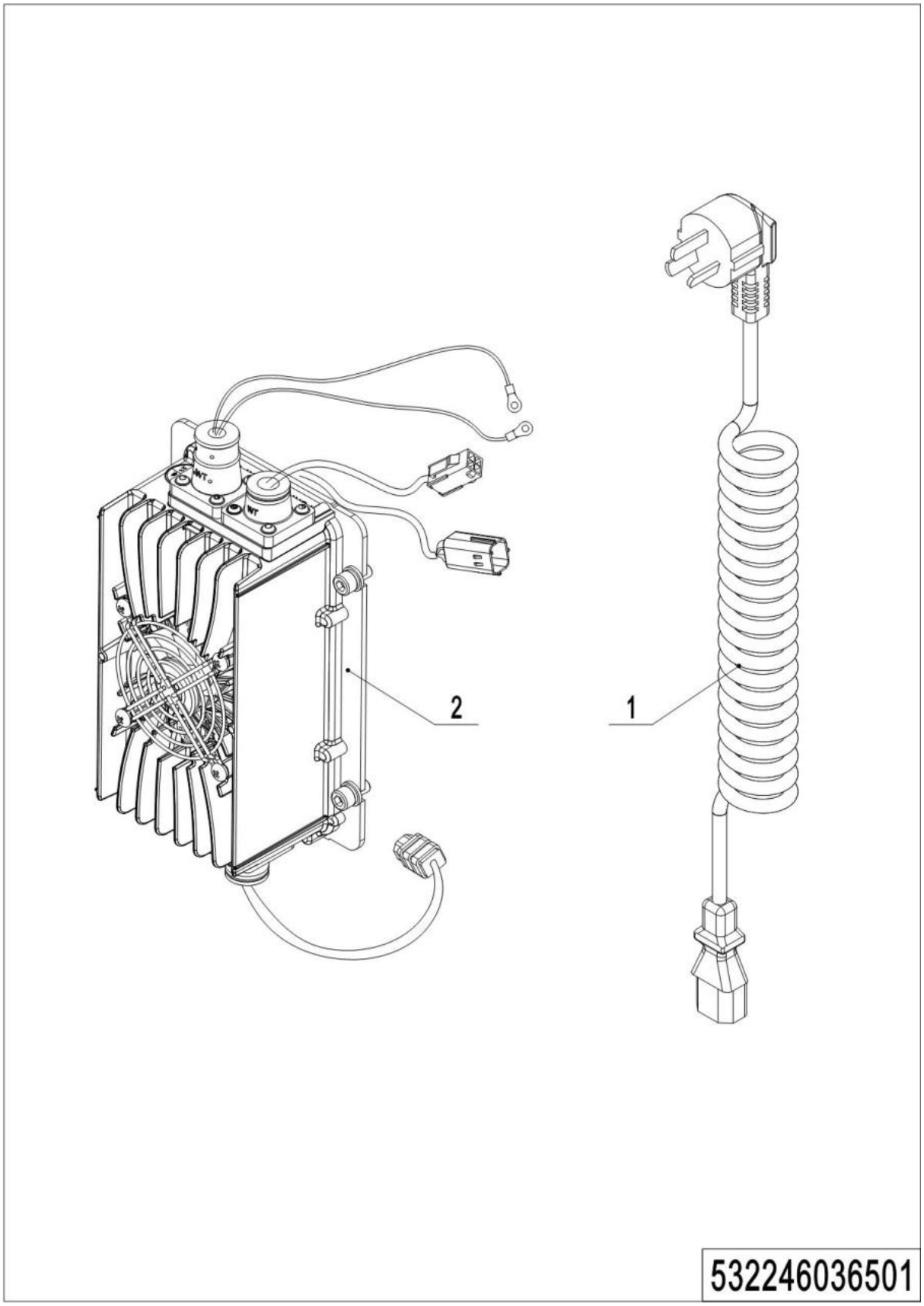

1=Supply as package; 2=Supply with limit; 3=Phasing out supply; 4=Supply as assembly; 5=Check other lists.

06 Charger (lead-acid battery) (532246036501)

No.	Item Code	Mark	Item Description	Qty.	Substitute	Note
1	921500200008		Spring Cable（Asia）	1		
1	921500200005		Spring Cable(EU)	1		EN1175:2020
1	921500200003		Spring Cable(AUS)	1		
1	921500200004		Spring Cable(ENG)	1		EN1175:2020
1	921500200002		Spring Cable(USA)	1		
1	921500200037		Spring Cable(ARG)	1		
1	921500200006		Spring Cable(ITY)	1		EN1175:2020
1	921500200007		Spring Cable(SWD)	1		EN1175:2020
1	921500200029		Spring Cable(ISR)	1		
1	921500200061		Spring Cable(BRA)	1		
1	921500200065		Spring Cable(ZA)	1		
1	921500200067		Spring Cable(JP)	1		
1	921500200066		Spring Cable(IND)	1		
1	921500200068		Spring Cable(Peru)	1		
2	921000100051		Charger24V12V	1		

07 Charger (lithium battery) (532246036502)

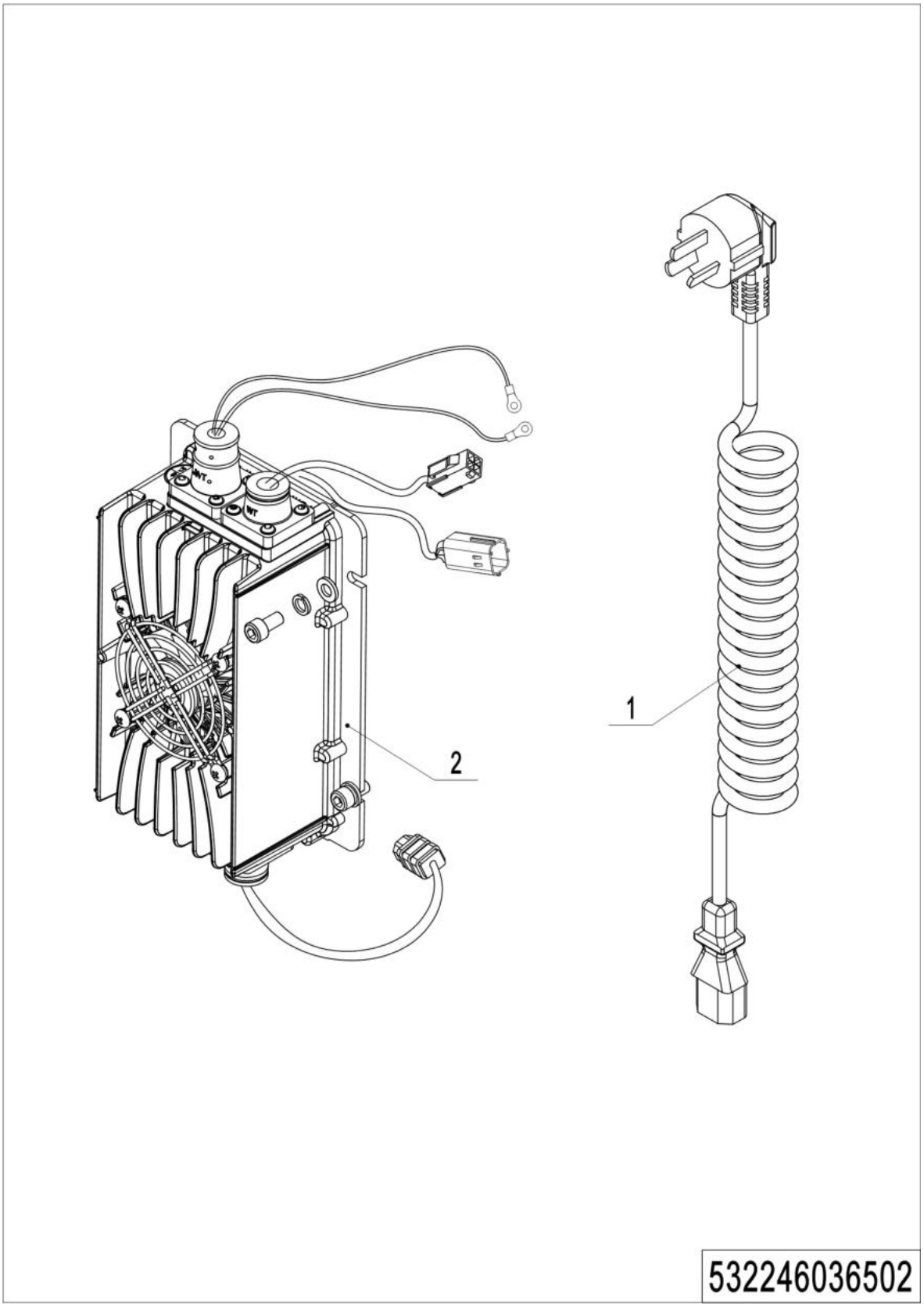

1=Supply as package; 2=Supply with limit; 3=Phasing out supply; 4=Supply as assembly; 5=Check other lists.

07 Charger (lithium battery) (532246036502)

No.	Item Code	Mark	Item Description	Qty.	Substitute	Note
1	921500200008		Spring Cable（Asia）	1		
1	921500200005		Spring Cable(EU)	1		EN1175:2020
1	921500200003		Spring Cable(AUS)	1		
1	921500200004		Spring Cable(ENG)	1		EN1175:2020
1	921500200002		Spring Cable(USA)	1		
1	921500200037		Spring Cable(ARG)	1		
1	921500200006		Spring Cable(ITY)	1		EN1175:2020
1	921500200007		Spring Cable(SWD)	1		EN1175:2020
1	921500200029		Spring Cable(ISR)	1		
1	921500200061		Spring Cable(BRA)	1		
1	921500200065		Spring Cable(ZA)	1		
1	921500200067		Spring Cable(JP)	1		
1	921500200066		Spring Cable(IND)	1		
1	921500200068		Spring Cable(Peru)	1		
2	921000100052		Charger 24V25A	1		

Chapter 7: Special equipment

01 Load backrest (536746040501)

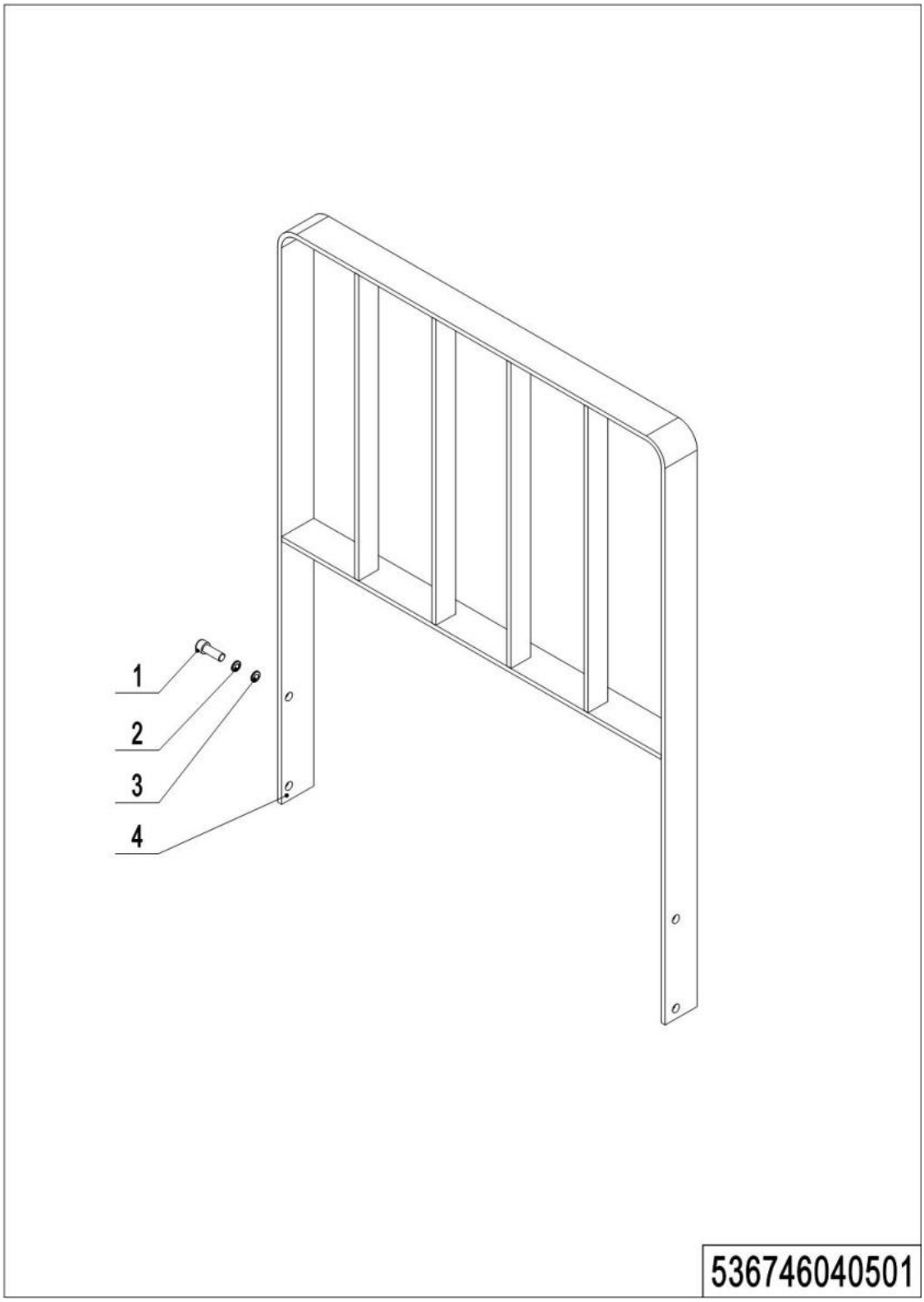

01 Load backrest (536746040501)

No.	Item Code	Mark	Item Description	Qty.	Substitute	Note
1	910200200075	1	Screw	4		
2	910400500007	1	Spring Washer	4		
3	910400100007	1	Flat Washer	4		
4	532340510003		Load Backrest	1		

Chapter 8: Others

01 Labels and decals (EU) (536746047001)

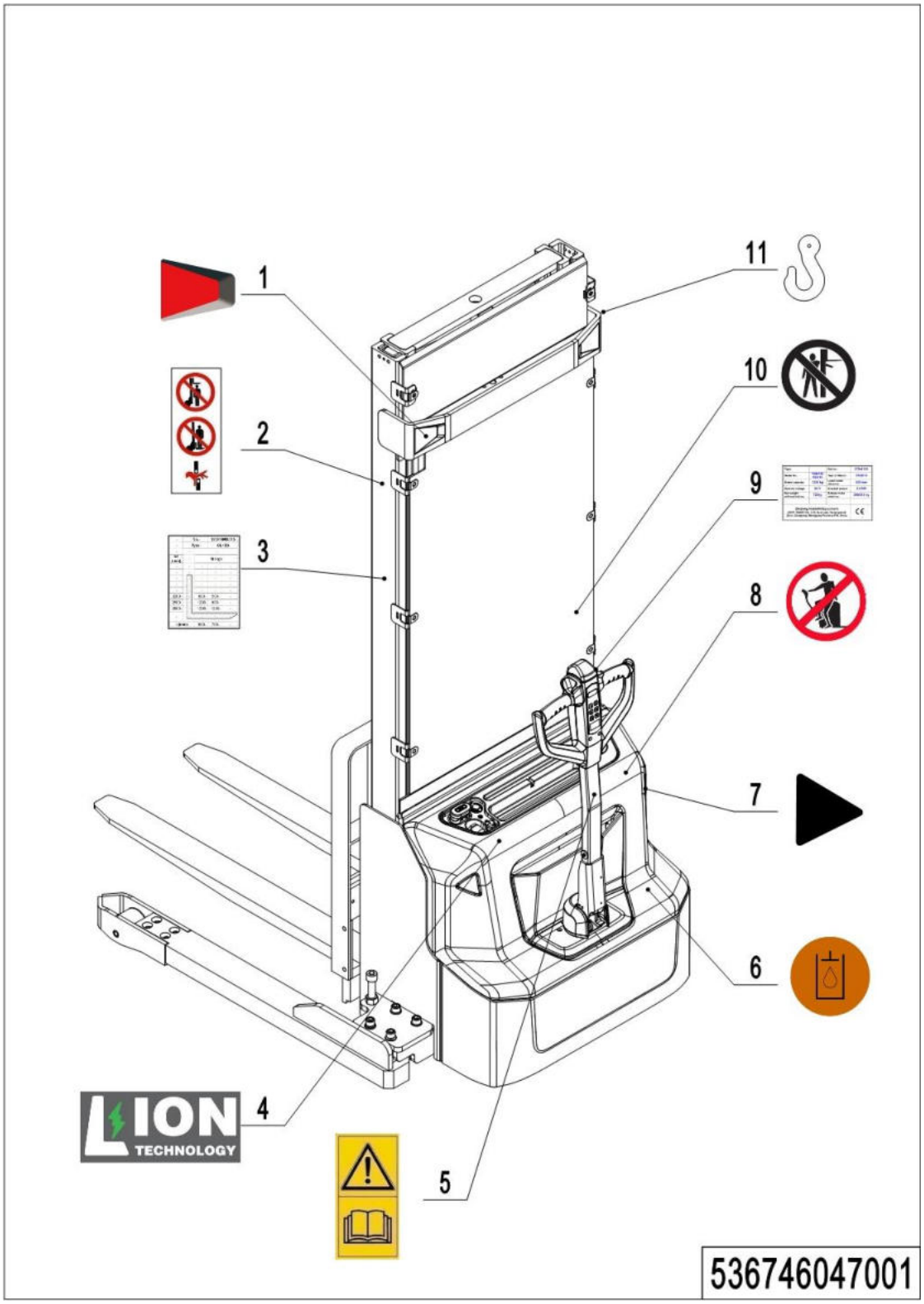

01 Labels and decals (EU) (536746047001)

No.	Item Code	Mark	Item Description	Qty.	Substitute	Note
1	532247020007		Warning decal	1		
2	941200100004		Label	2		
3	536747520001		Load Capacity Diagram	1		
4	532247020002		Label	1		For lithium battery
5	941200300002		Label	1		
6	941200300003		Label	1		Internal
7	532247020000		Label	2		
8	941200100003		Label	1		
9	536747520017		Label (ID plate with CE mark)	1		
10	941200100006		Label	1		
11	941200300001		Label	2		

02 Labels and decals (USA) (536746047002)

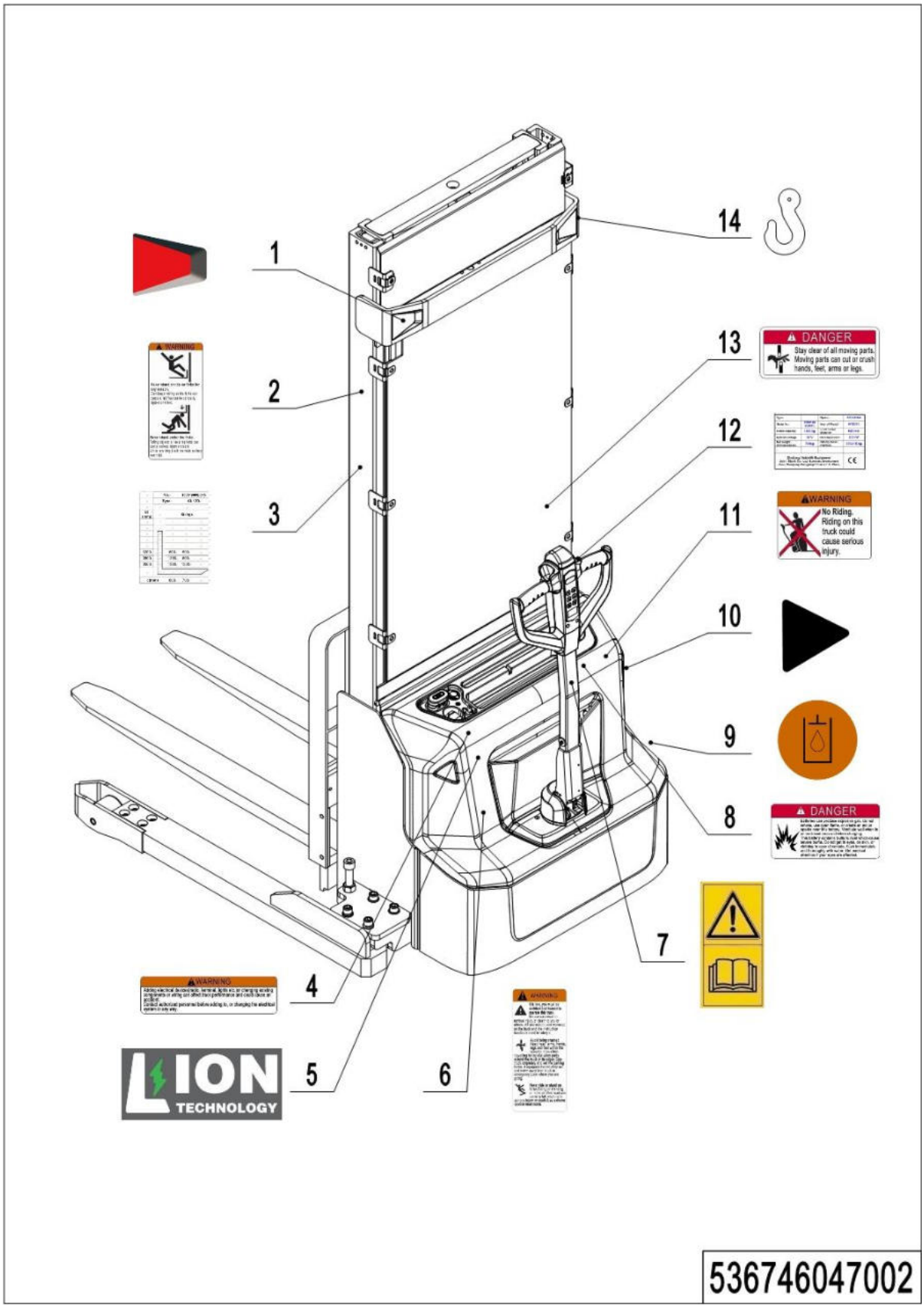

1=Supply as package; 2=Supply with limit; 3=Phasing out supply; 4=Supply as assembly; 5=Check other lists.

02 Labels and decals (USA) (536746047002)

No.	Item Code	Mark	Item Description	Qty.	Substitute	Note
1	532247020007		Warning decal	1		
2	941200100016		Label	2		
3	536747520001		Load Capacity Diagram	1		
4	941200100010		Label	1		
5	532247020002		Label	1		For lithium battery
6	941200100009		Label	1		
7	941200300002		Label	1		
8	941200100013		Label	1		
9	941200300003		Label	1		Internal
10	532247020000		Label	2		
11	941200100011		Label	1		
12	536747520017		Label (ID plate with CE mark)	1		
13	941200100014		Label	1		
14	941200300001		Label	2		

Appendix

01 Electrical circuit diagram (lead-acid battery) (532246045501)

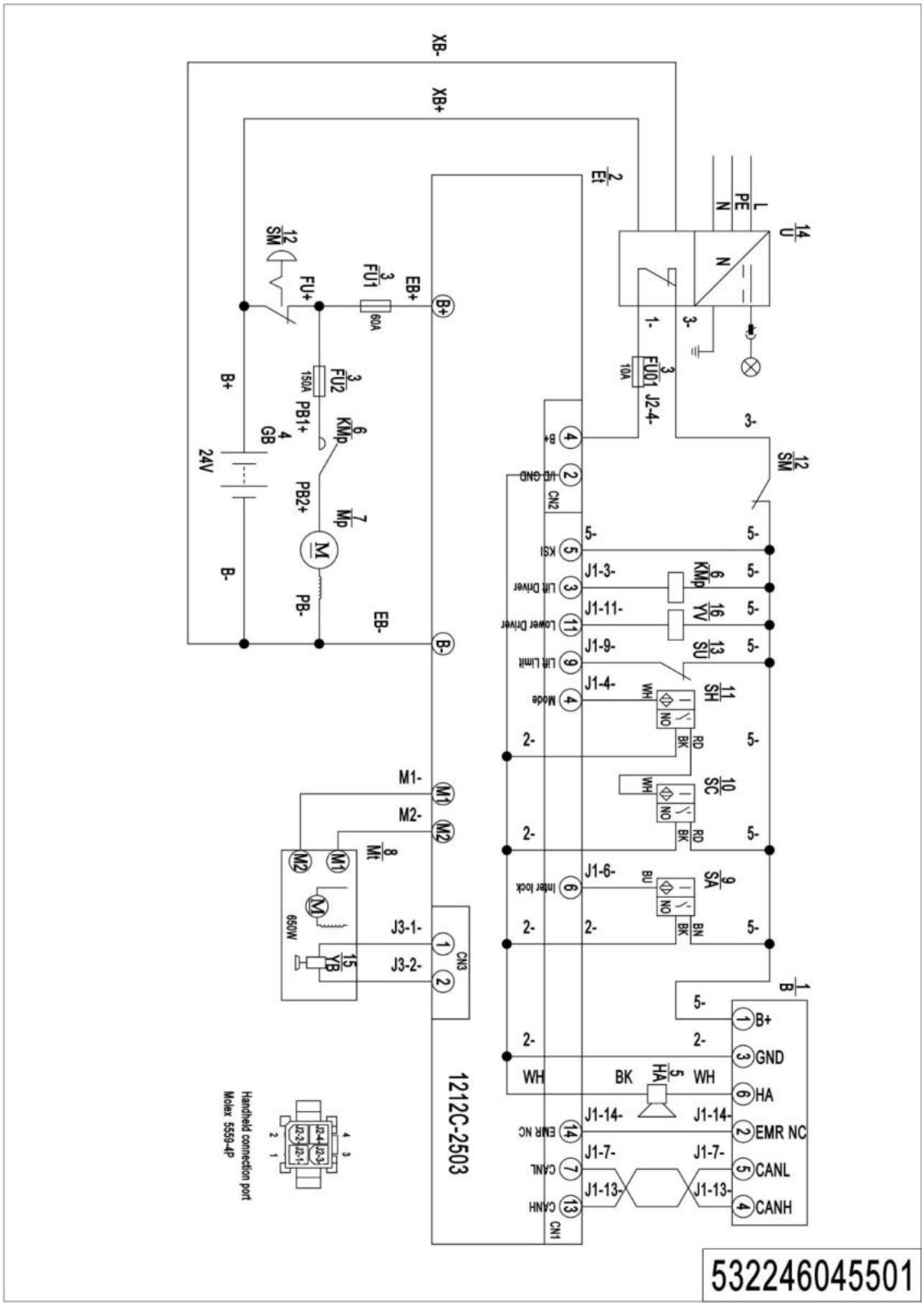

02 Electrical circuit diagram (Lithium battery) (532246045502)

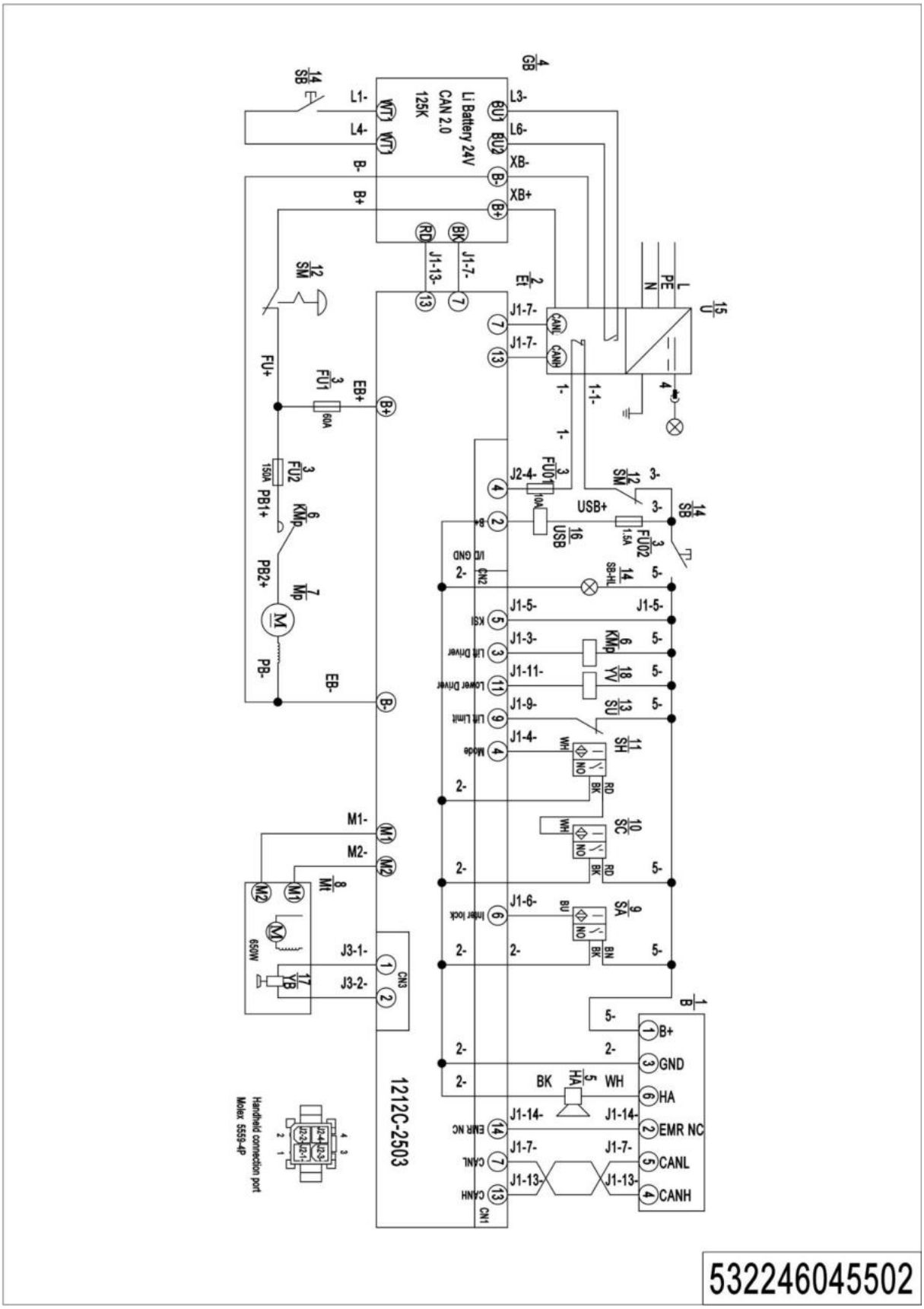

03 Electrical circuit diagram (lead-acid battery, EN1175:2020) (532246045510)

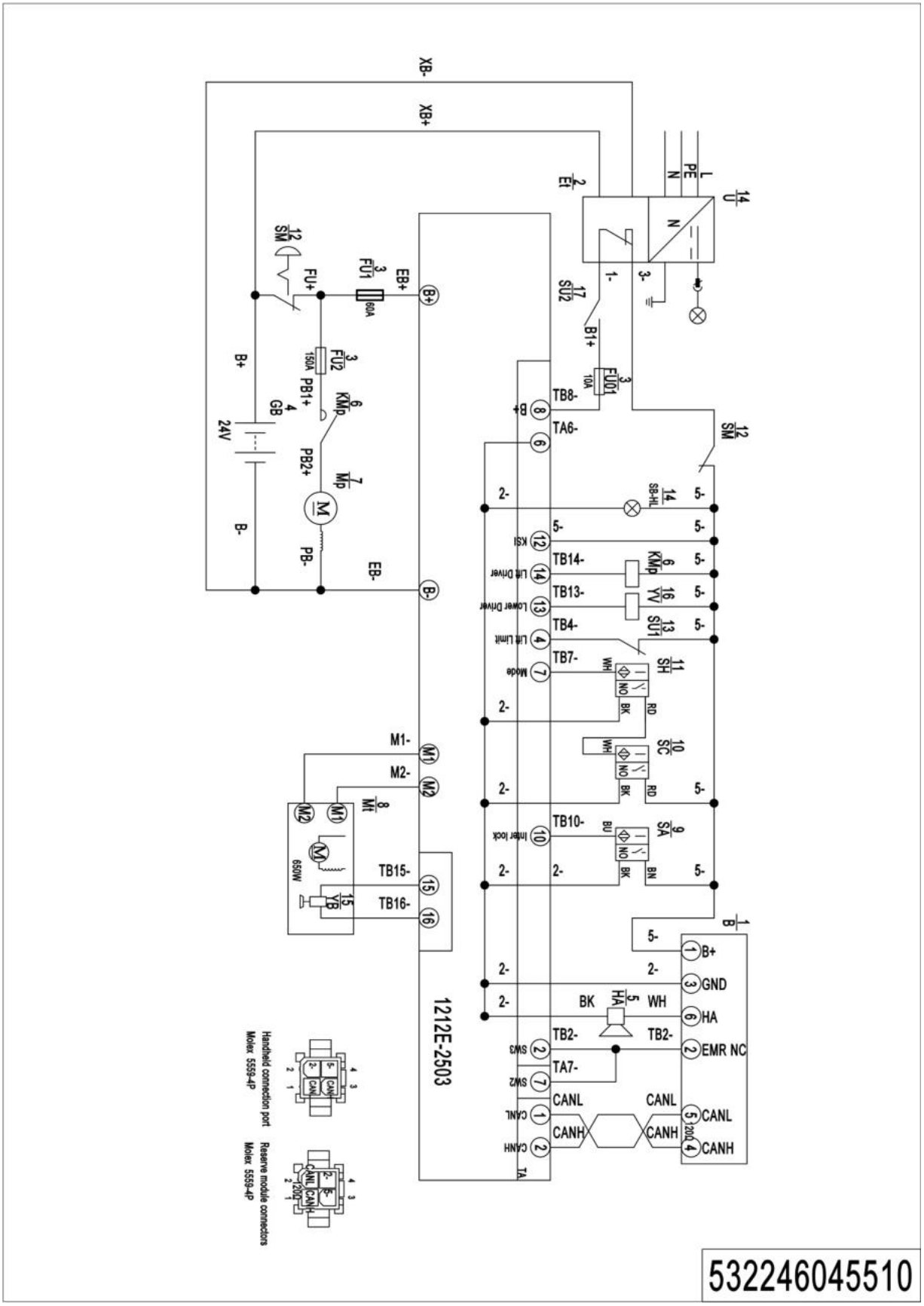

04 Electrical circuit diagram (Lithium battery, EN1175:2020) (532246045511)

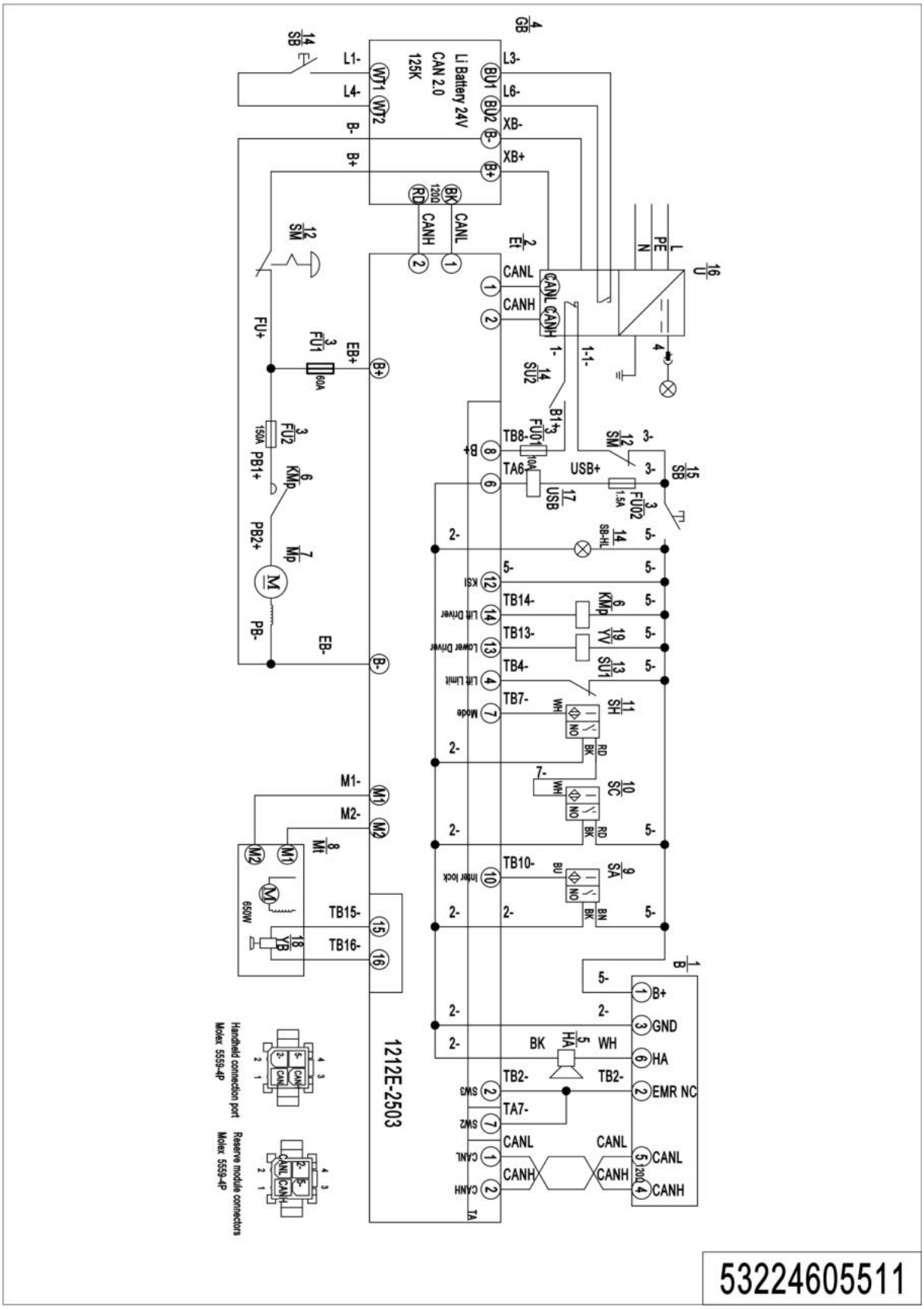

05 Hydraulic circuit diagram (532246045503)

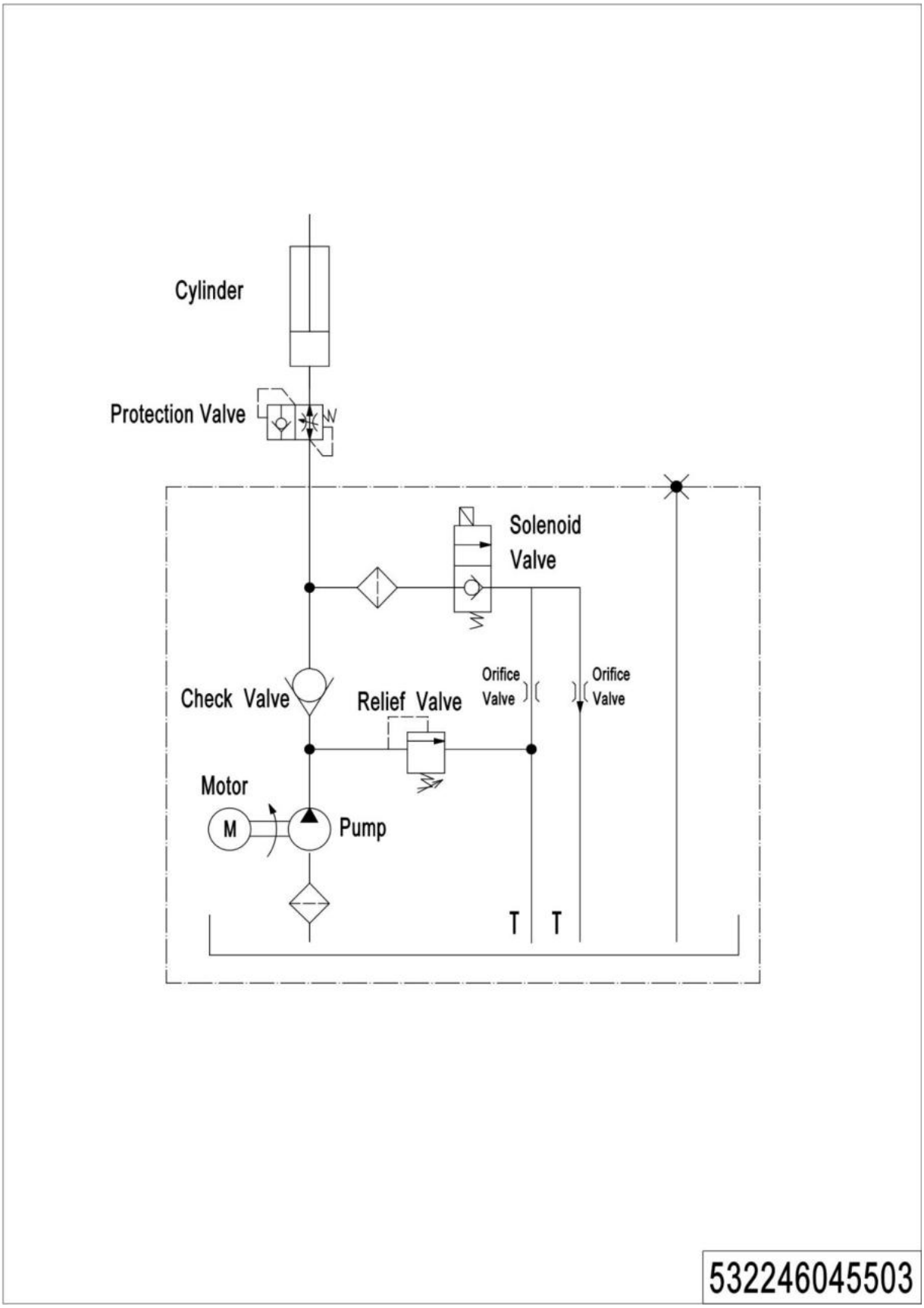

06 Easy worn parts list

No.	Item Code	Item Description	Qty.	Chapter/ Section/ Number
1	910700200019	Bearing	4	Chapter 4/05/2.01 Chapter 4/06/21.02
2	940300300009	WheelΦ84x70	2	Chapter 4/05/2
3	532998510000	Wheel	2	Chapter 4/05/3
4	532298510002	Seal Kit	1	Chapter 5/01/46.01 Chapter 5/02/33.01
5	940300300018	WheelΦ100x40	2	Chapter 4/06/5
6	503598510003	Caster Assembly	2	Chapter 4/06/6
7	532211020003	Gas Spring	1	Chapter 4/01/7
8	940500200001	Bushing	2	Chapter 4/01/8
9	910700200020	Bearing	2	Chapter 5/01/37 Chapter 5/02/23
10	920100100003	Fuse	1	Chapter 6/05/9
11	920100100007	Fuse	1	Chapter 6/05/11
12	920100200002	Fuse	1	Chapter 6/05/12