Electric Pallet Stacker SWB-130D

PARTS MANUAL

563046020101

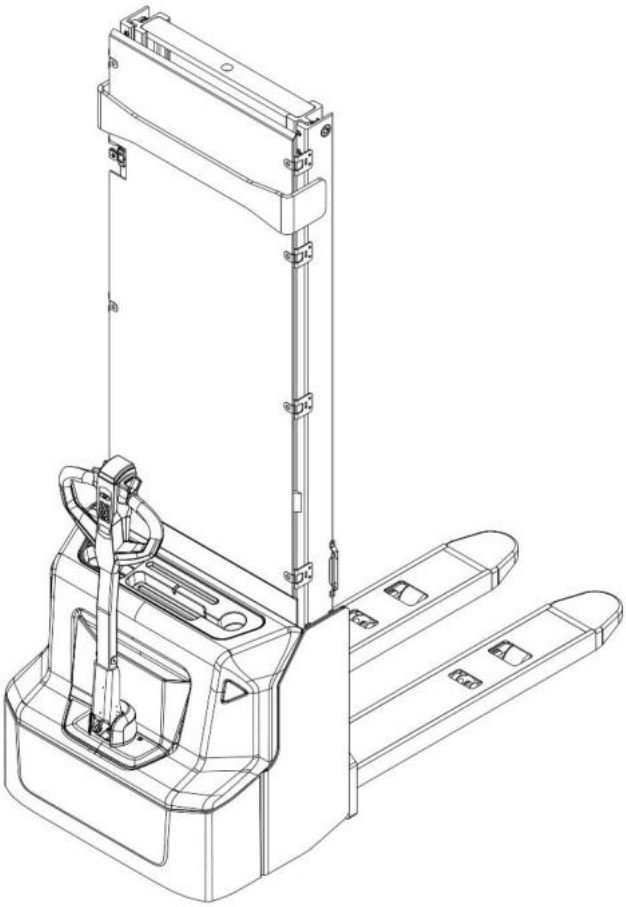

Version: V01

Truck Identification Number From:

Parts Manual SWB-130D-PM01EN

Please order spare parts from authorized dealers of our company.

In order to avoid wrong delivery, all the orders for spare parts should specify the following items:

- Truck model, identification number and manufacture year.
- Orders for spare parts of mast, hydraulic transmission unit, steering axle, motor, etc. shall indicate the manufacture number of these parts.
- Codes for our company spare parts are shown in the table of parts manual. Please also pay attention to the description of supply status, order quantity, etc. (check the number listed in "Mark" column of the parts manual).

"Mark" Column:

The unmarked indicates the parts are in short supply cycle.

Number 1: supply as package. Indicating these that parts are small parts and seal parts, which are supplied in package unit and in short supply cycle.

Number 2: supply with constraints. Indicating that these spare parts are not in stock and will be prepared for production after receiving the order from customers, which are in long supply cycle.

Number 3: phasing-out supply. Indicating that these parts will be replaced by new parts due to technical improvements and the current stock will not be available when these parts run out. Please check the description of technical improvements notice.

Number 4: supply as assembly. Indicating that these parts are assembly parts defined by manufacture process, which cannot be supplied as a single part.

Number 5: check other tables.

This parts manual is the property of our company and can be shared under the confidential agreement only, our company has the right to claim for compensation of any unauthorized use. Copy without permission is not allowed. Figures in the manual are not limited by the original design. our company reserves the right to improve the products for continuous technology progress.

TABLE OF CONTENTS

Chapter 1: Drive system 1
01 Drive unit (540246013501) 1
02 Drive Assembly (YX) (532246013002) 3
Chapter 2: Hydraulic system 5
01 Hydraulic unit (563046024001) 5
01 Hydraulic unit (563046024001) continuation 7
02 Pump unit (563046023501) 9
Chapter 3: Truck structure 11
01 Truck frame (562346021501) 11
02 Truck frame (562346021503) 13
03 Forks (563046038001) 15
04 Battery holder (lithium battery) (540246012501) 17
05 Battery holder (lead-acid battery) (563046012501) 19
06 Control panel assembly (EN1175:2020) (540246010001) 21
06 Control panel assembly (540246010002) 23
Chapter 4: Steering system, braking system and wheels 25
01 Tiller (563046011000) 25
02 Tiller head (SHIJIA) (563046011010) 27
03 Load wheel (563046017001) 29
04 Side wheel (532246016501) 31
05 Manual steering (532246031201) 33
Chapter 5: Mast system 35
01 Two stage FL mast (563046043501) 35
01 Two stage FL mast (563046043501) continuation 37
01 Two stage FL mast (563046043501) continuation 39
02 Pull rod assembly (563046043502) 41
Chapter 6: Electrical parts and wire harness 43
01 Wire harness (563046033001) 43
02 Electrical control unit (563046036301) 45
03 Charger (lead-acid battery) (563046036501) 47
Chapter 7: Special equipment 49
01 Load backrest (532246040501) 49
Chapter 8: Others 51
01 Labels and decals (EU) (563046047002) 51
02 Labels and decals (USA) (563046047003) 53
Appendix 55
01 Electrical circuit diagram (Lithium battery) (563046045501) 55
02 Electrical circuit diagram (lead-acid battery) (563046045502) 56
03 Hydraulic circuit diagram (562346045503) 57
04 Easy worn parts list 58

Chapter 1: Drive system

01 Drive unit (540246013501)

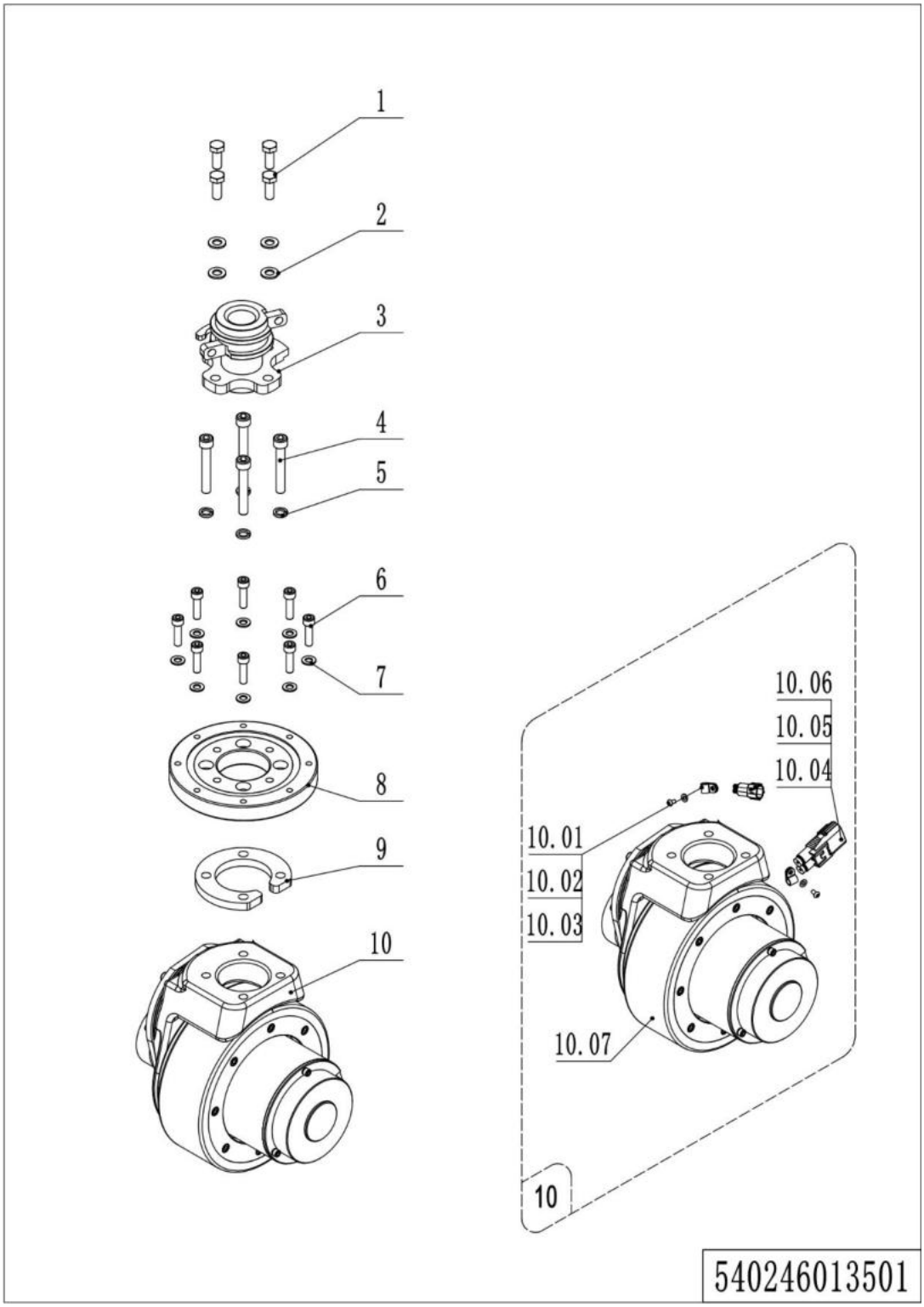

1=Supply as package; 2=Supply with limit; 3=Phasing out supply; 4=Supply as assembly; 5=Check other lists.

01 Drive unit (540246013501)

No.	Item Code	Mark	Item Description	Qty.	Substitute	Note
1	910100300036	1	Bolt M10x25	4		
2	910400100007	1	Flat Washer	4		
3	532231210005		Drive Shaft	1		
4	910200200079	1	Screw M10x40	4		
5	910400500007	1	Spring Washer	4		
6	910200200138	1	Screw M8x30	8		
7	910400100006	1	Flat Washer	8		
8	532213520001		Slewing Bearing	1		
9	532213520002		Connecting Plate	1		
10	508013510002		Drive Kit	1		YX
10	508013510005		Drive Kit	1		YX, Anti-skip wheel
10.01	910200700001	1	Screw M4x10	2		
10.02	910400100003	1	Flat Washer	2		
10.03	921300200001		Cable Clamp	2		
10.04	920400200169	1	Connector	1		
10.05	920400200171	1	Connector	2		
10.06	920400200172	1	Connector	2		
10.07	940900100049		Drive Assembly	1		Check 532246013002
10.07	940900100057		Drive Assembly	1		Check 532246013002

02 Drive Assembly (YX) (532246013002)

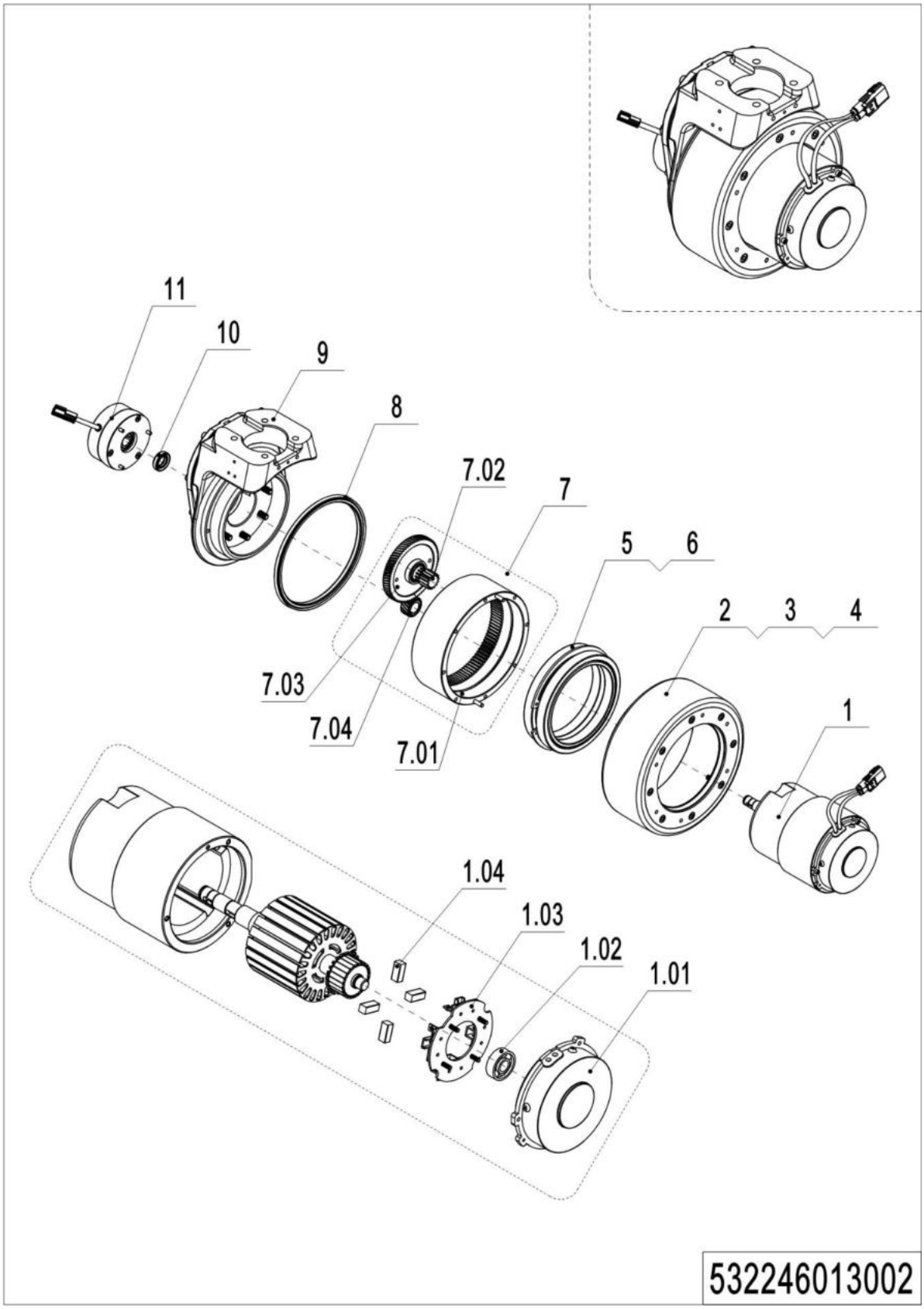

1=Supply as package; 2=Supply with limit; 3=Phasing out supply; 4=Supply as assembly; 5=Check other lists.

02 Drive Assembly (YX) (532246013002)

No.	Item Code	Mark	Item Description	Qty.	Substitute	Note
--	940900100049		Drive Assembly	1		YX
--	940900100057		Drive Assembly	1		YX, Anti-skip wheel
1	508098510158		Motor Kit	1		Waterproof plug
1.01	507798520022		End Cap	1		
1.02	910700200016		Bearing	1		
1.03	507798520024		Carbon Brush Holder	1		
1.04	507798520023		Carbon Brush	4		
2	961004000009		Drive Wheel	1		
2	961004200001		Drive Wheel	1		Anti-skip wheel
3	961004000011		Oil Seal	1		
4	910200200167		Screw Kits M6x20	8		
5	910700200044		Bearing	2		
6	961004000007		Spacer Bush	1		
7	507798510006		Gear Kit	1		
7.01	961004000006		Gear	1		
7.02	961004000003		Gear Shaft	1		
7.03	961004000002		Gear	1		
7.04	961004000005		Gear	1		
8	961004000010		Oil Seal	1		
9	507798510007		Gearbox Shell	1		
10	961000700012		Oil Seal	1		
11	940700100015		Electromagnetic Brake	1		STEKI

Chapter 2: Hydraulic system

01 **Hydraulic unit** (563046024001)

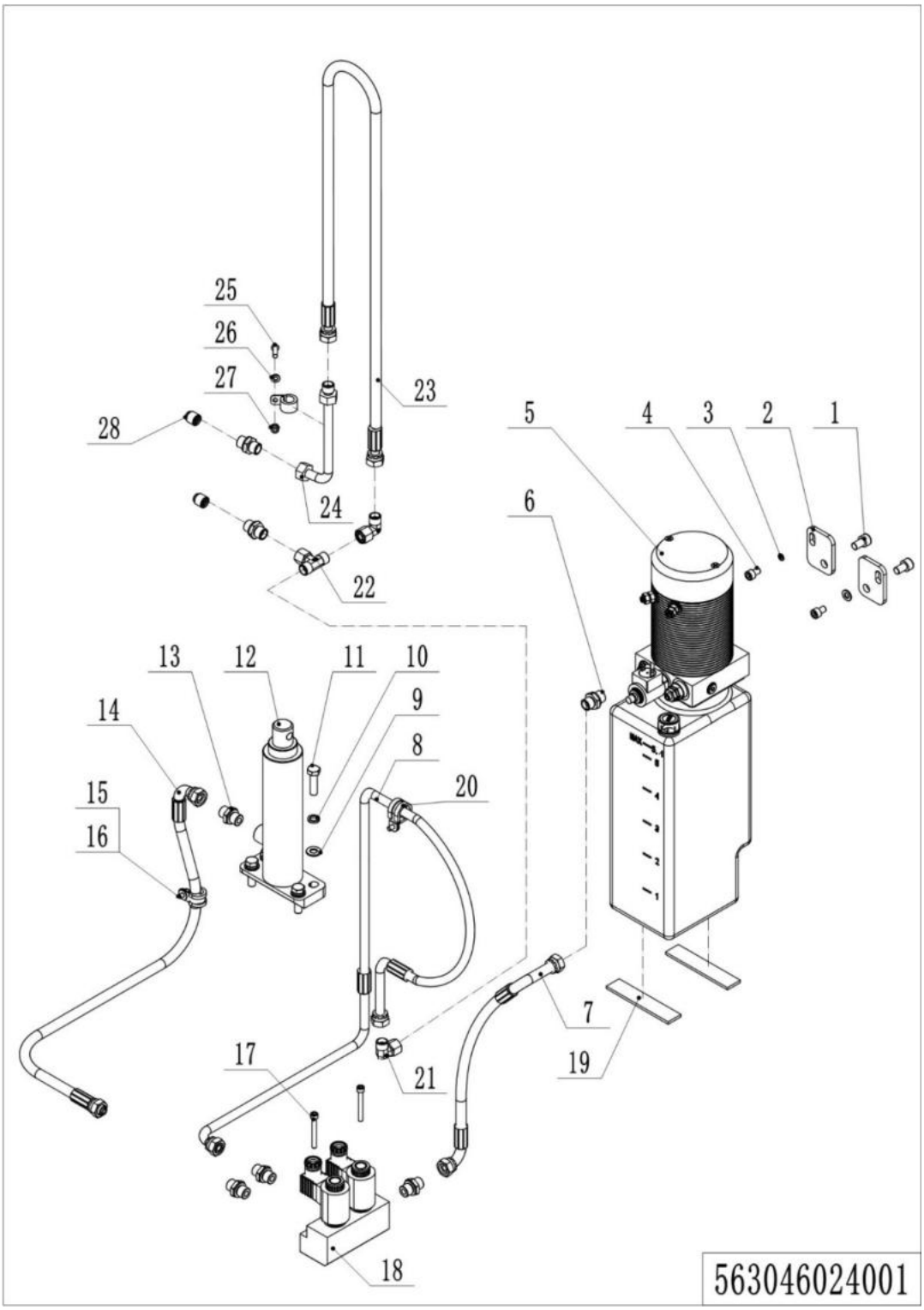

01 Hydraulic unit （563046024001）

No.	Item Code	Mark	Item Description	Qty.	Substitute	Note
1	910200200074	1	Screw M10x16	2		
2	532223520001		Connecting Plate	2		
3	910400100006	1	Flat Washer	2		
4	910200200053	1	Screw M8x12	2		
5	950900100163	5	Pump Unit	1		Check 563046023501
6	950400300007		Adapter	1		
7	562324510005		Hose	1		
8	563024510001		Hose	1		
9	910400100007	1	Flat Washer	4		
10	910400500007	1	Spring Washer	4		
11	910100300038	1	Bolt M10x35	4		
12	562324510010		Cylinder	1		
13	950400400003		Adapter	6		
14	562324510003		Hose	1		
15	910200200033	1	Screw M6x12	2		
16	951000100003		Hose Clamp	2		
17	910200200043	1	Screw M6x50	2		
18	562324510002		Valve Block	1		
19	532223520010		Crash Pad	2		
20	951000100011		Hose Clamp	1		
21	950400200003		Joint	2		
22	950400900002		Adapter	1		
23	540243520044		Hose	1		2600
23	540243520043		Hose	1		2900
23	540243520042		Hose	1		3200
23	540243520030		Hose	1		3600
24	532643520136		Hydraulic Steel Pipe	1		
25	910200300019		Screw M6x20	1		
26	910400100005		Flat Washer	1		
27	910300500003		Nut	1		

1=Supply as package; 2=Supply with limit; 3=Phasing out supply; 4=Supply as assembly; 5=Check other lists.

01 Hydraulic unit (563046024001) continuation

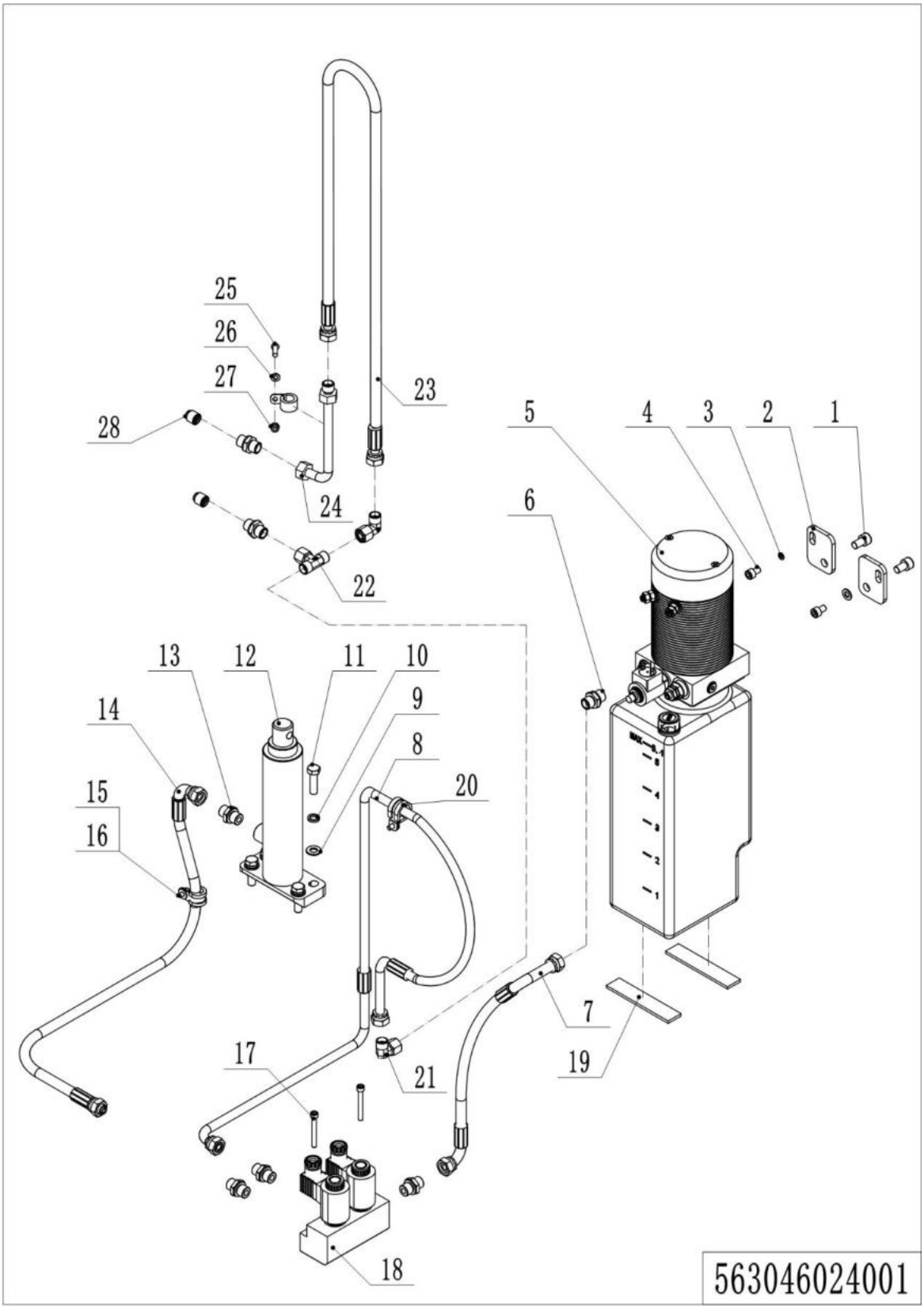

01 Hydraulic unit (563046024001) continuation

No.	Item Code	Mark	Item Description	Qty.	Substitute	Note
28	950600300001		Safety Valve	2		

02 Pump unit (563046023501)

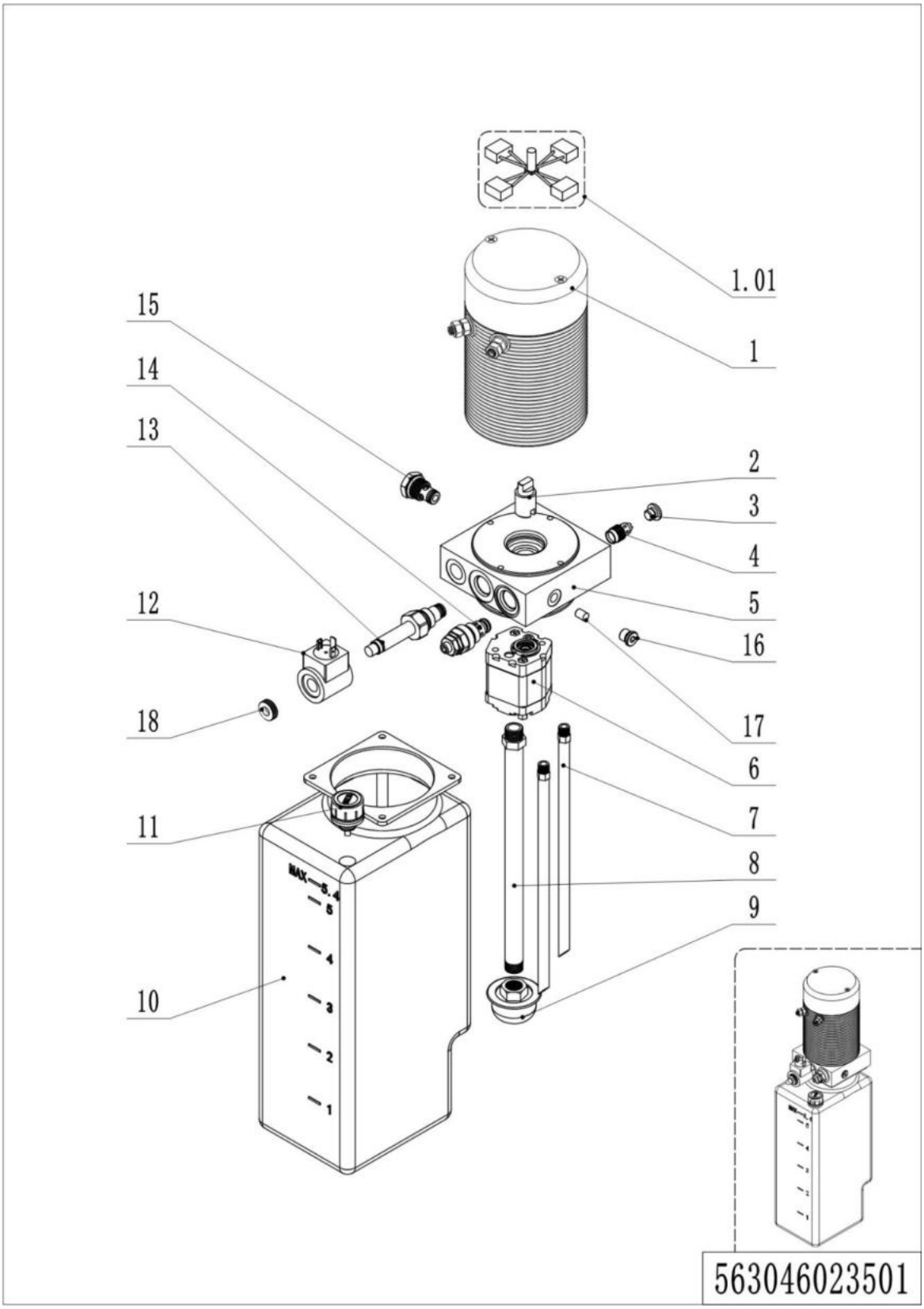

02 Pump unit （563046023501）

No.	Item Code	Mark	Item Description	Qty.	Substitute	Note
--	950900100163		Pump Unit	1		
1	532298510056		Motor	1		
1.01	532298510058		Carbon Brush	1		
2	532298520007		Coupling	1		
3	532298520003		End Cap	1		
4	532298510059		Valve	1		
5	532298510060		Valve Block	1		
6	532298510057		Gear Pump	1		
7	532298520004		Return Pipe	2		
8	532298520005		Oil Tube	1		
9	532298510031		Filter	1		
10	532298510029		Tank	1		
11	532298510030		Cap-Tank	1		
12	532298510034		Coil	1		
13	532298510033		Magnetic Valve	1		
14	532298510044		Overflow Valve	1		
15	532298510028		Check Valve	1		
16	532298510061		End Cap	1		
17	532298520010		Screw	1		
18	532298520011		Nut	1		

Chapter 3: Truck structure

01 Truck frame (562346021501)

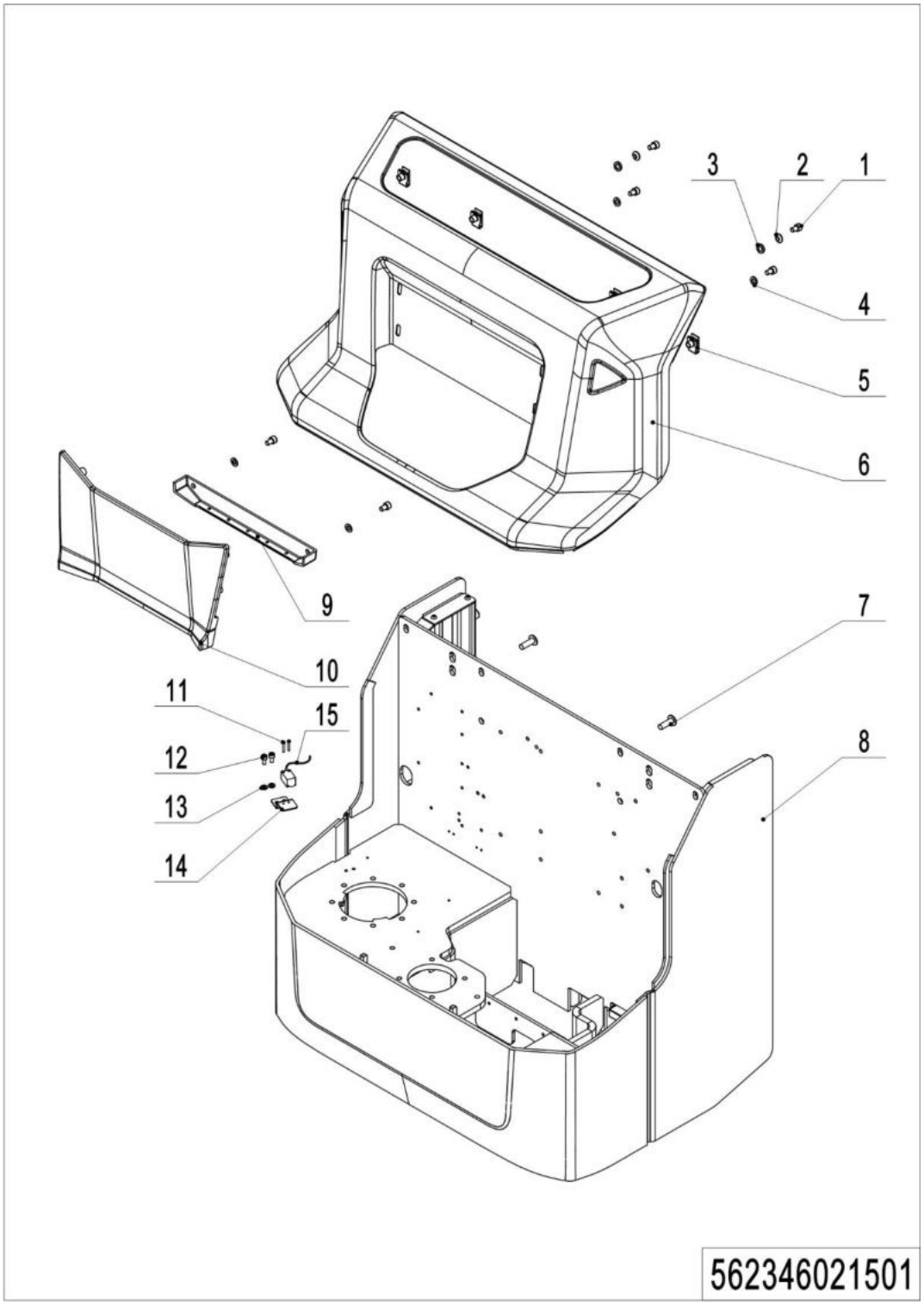

01 Truck frame (562346021501)

No.	Item Code	Mark	Item Description	Qty.	Substitute	Note
1	910200200053	1	Screw M8x12	6		
2	910400600004	1	Spherical Washer	2		
3	910400700004	1	Cone Washer	2		
4	910400100006	1	Flat Washer	4		
5	940400400003		Cage Nut	4		
6	532221510003		Cover	1		
7	941100100004	1	Screw M10x30	4		
8	562321510002	2	Chassis(570x1150)	1		570x1150
8	562321510003	2	Chassis(685x1150)	1		685x1150
9	532221520025		Cover	1		
10	532221520024		Panel	1		
11	910200500015	1	Screw M3x20	2		
12	910200200033	1	Screw M6x12	2		
13	910400100005	1	Flat Washer	2		
14	532231220021		Mounting Plate	1		
15	920200400029		Proximity Switch	1		

02 Truck frame (562346021503)

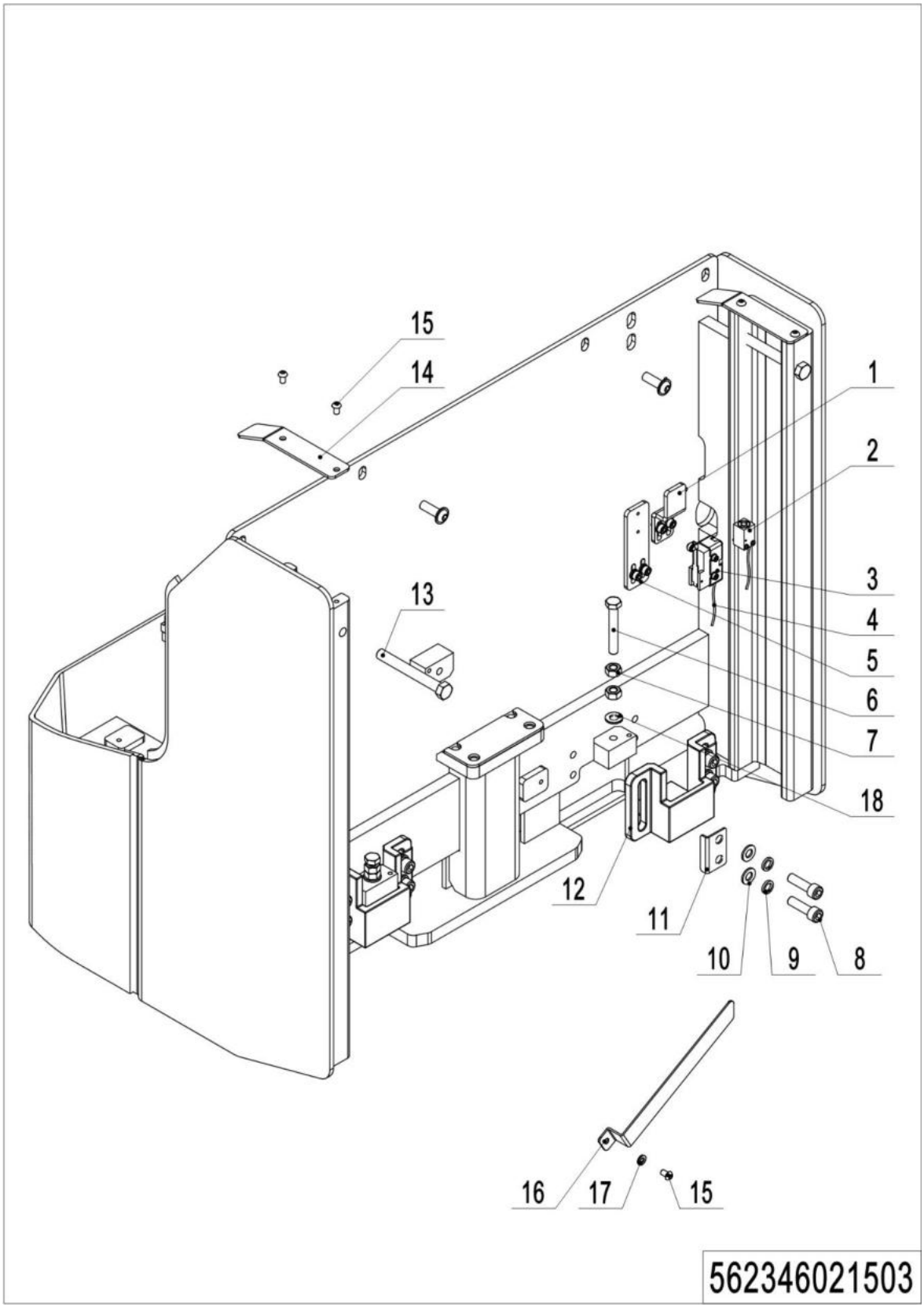

1=Supply as package; 2=Supply with limit; 3=Phasing out supply; 4=Supply as assembly; 5=Check other lists.

02 Truck frame (562346021503)

No.	Item Code	Mark	Item Description	Qty.	Substitute	Note
1	562321520003		Mounting Plate	1		
2	505633510000		Proximity Switch	1		
3	920200300003		Microswitch	1		
4	562333010004		Wire Harness	1		
5	562321520002		Mounting Plate	1		
6	910100300097		Bolt M10x75	2		
7	910300100007		Nut	4		
8	910200200077		Screw M10x30	4		
9	910400500007		Spring Washer	4		
10	910400100007		Flat Washer	4		
11	562321520015		Baffle	2		
12	562321520001		Top Block	2		
13	910100100058		Bolt M12x100	2		
14	562321520004		Baffle	2		
15	910200300016		Screw M6x10	6		
16	562321520005		Baffle	1		
17	910400100005		Flat Washer	4		
18	910400100007		Flat Washer	2		

03 Forks (563046038001)

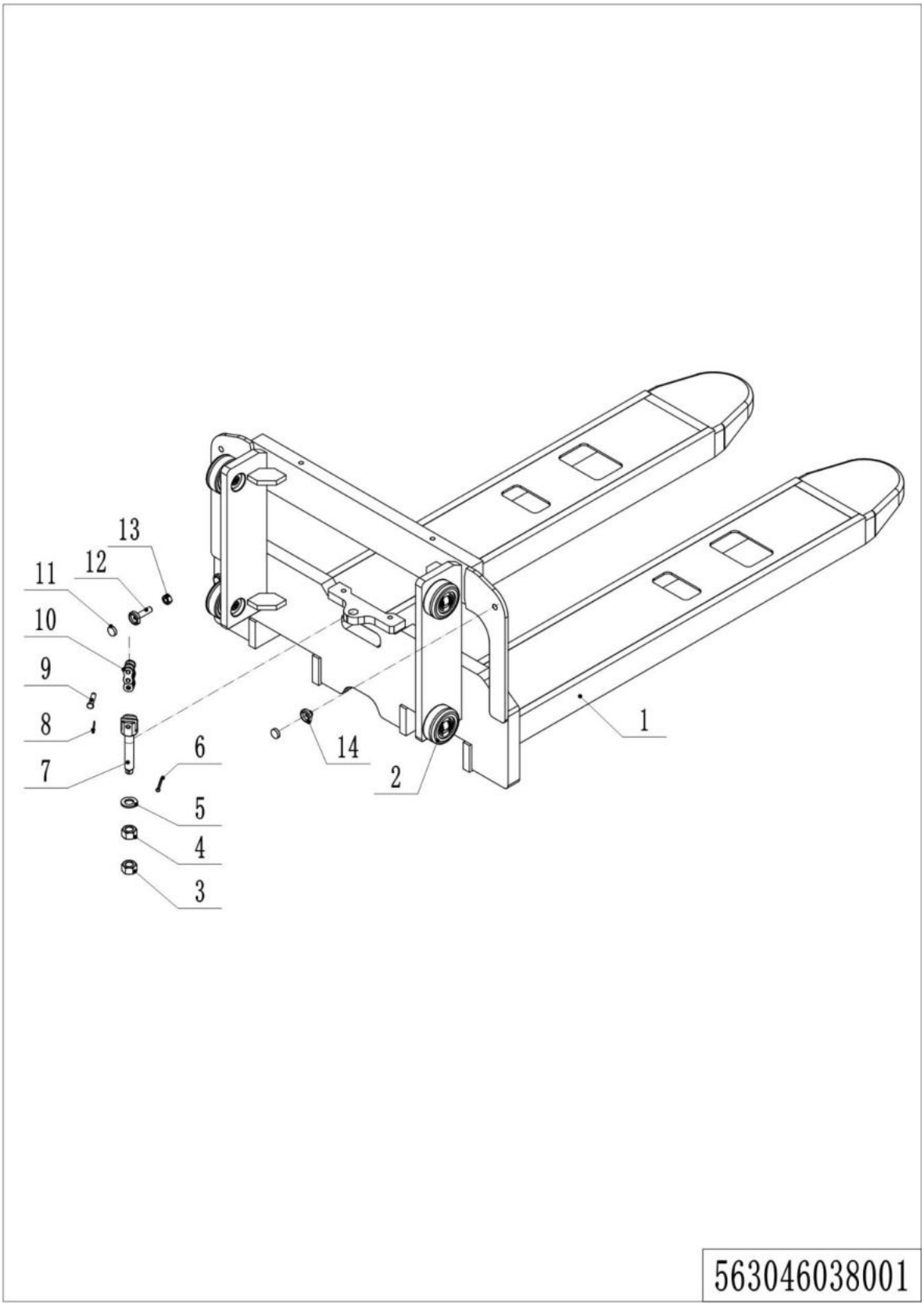

1=Supply as package; 2=Supply with limit; 3=Phasing out supply; 4=Supply as assembly; 5=Check other lists.

03 Forks (563046038001)

No.	Item Code	Mark	Item Description	Qty.	Substitute	Note
1	563038010001		Chassis	1		570x1150
1	563038010002		Chassis	1		685x1150
2	940200300001		Compound Roller	4		
3	910300200008		Nut	1		
4	910300400006		Nut	1		
5	910400100010		Flat Washer	1		
6	910600600034		Cotter Pin	1		
7	533243520008		Chain Bolt	1		
8	910600600015		Cotter Pin	1		
9	910600700028		Pin	1		
10	533243510031		Chain	1		2600
10	252043510046		Chain	1		2900
10	401124020007		Chain	1		3200
10	540243510015		Chain	1		3600
11	940600100001		Magnetic Steel	1		
12	940600200002		Mounting Base	1		
13	910300300005		Nut	1		
14	940600200001		Mounting Base	1		

04 Battery holder (lithium battery) (540246012501)

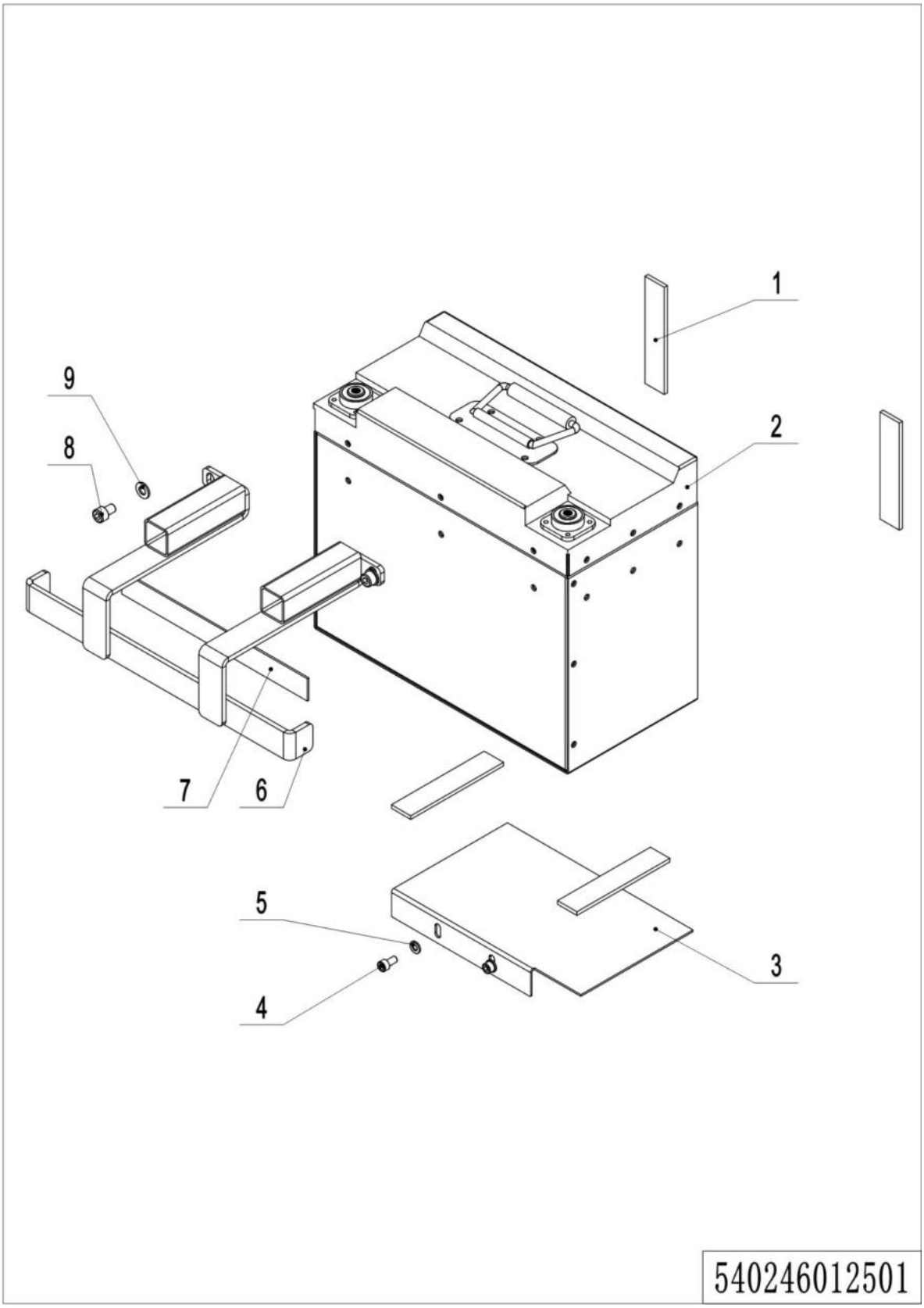

1=Supply as package; 2=Supply with limit; 3=Phasing out supply; 4=Supply as assembly; 5=Check other lists.

04 Battery holder (lithium battery) (540246012501)

No.	Item Code	Mark	Item Description	Qty.	Substitute	Note
1	532223520010		Crash Pad	4		
2	920600100445		Li-Battery24V100Ah	1		FDE
3	532212520006		Mounting Plate	1		
4	910200200033	1	Screw M6x12	2		
5	910400100005	1	Flat Washer	2		
6	532212510003		Mounting Plate	1		
7	532233020005		Crash Pad	1		
8	910200200053	1	Screw M8x12	2		
9	910400100006	1	Flat Washer	2		

05 Battery holder (lead-acid battery) (563046012501)

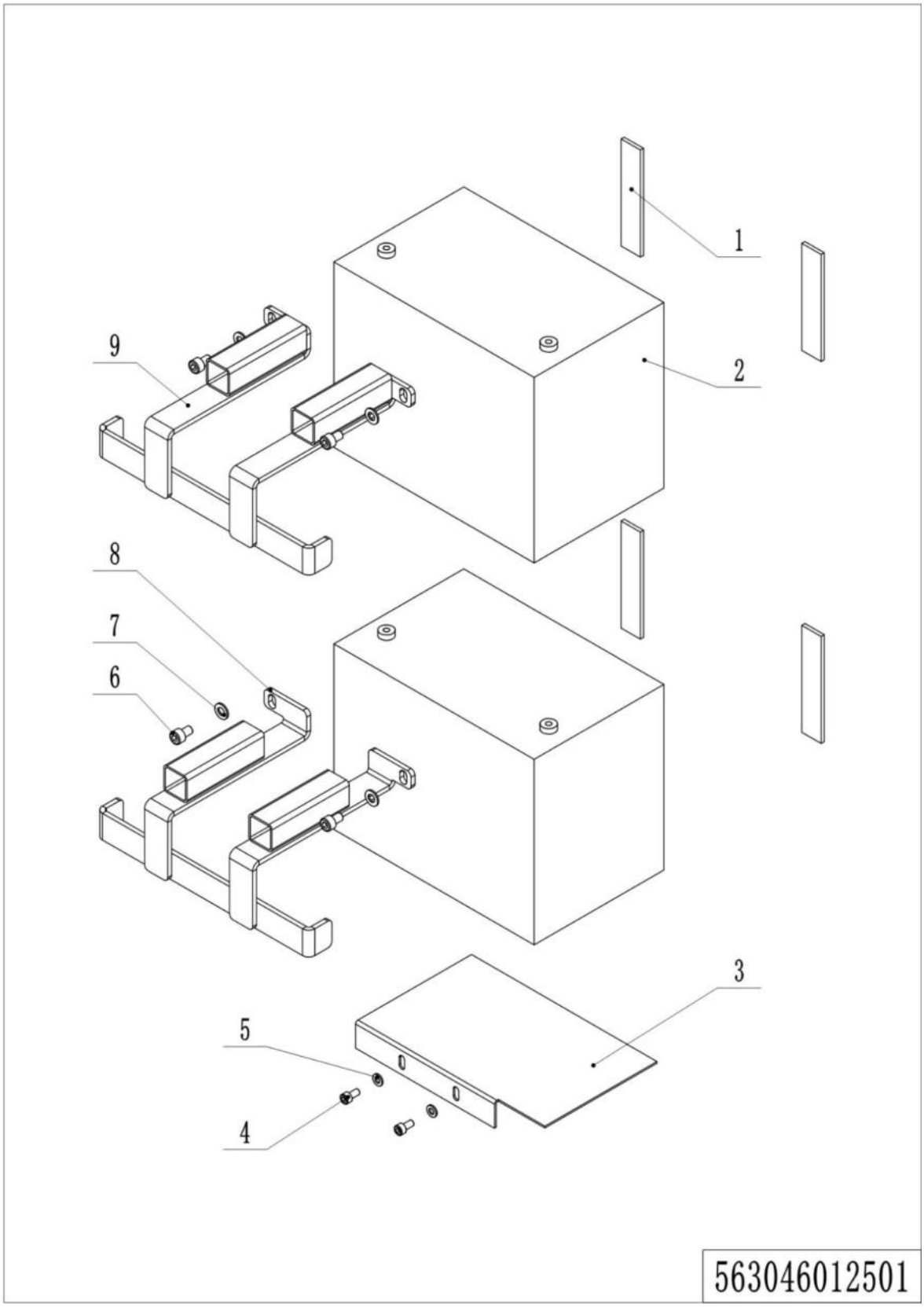

1=Supply as package; 2=Supply with limit; 3=Phasing out supply; 4=Supply as assembly; 5=Check other lists.

05 Battery holder (lead-acid battery) (563046012501)

No.	Item Code	Mark	Item Description	Qty.	Substitute	Note
1	532223520010		Crash Pad	4		
2	920600100081		Battery12V100Ah	2		
3	532212520006		Mounting Plate	1		
4	910200200033	1	Screw M6x12	2		
5	910400100005	1	Flat Washer	2		
6	910200200053	1	Screw M8x12	4		
7	910400100006	1	Flat Washer	4		
8	532212510004		Mounting Plate	1		
9	532212510003		Mounting Plate	1		

06 Control panel assembly (EN1175:2020) (540246010001)

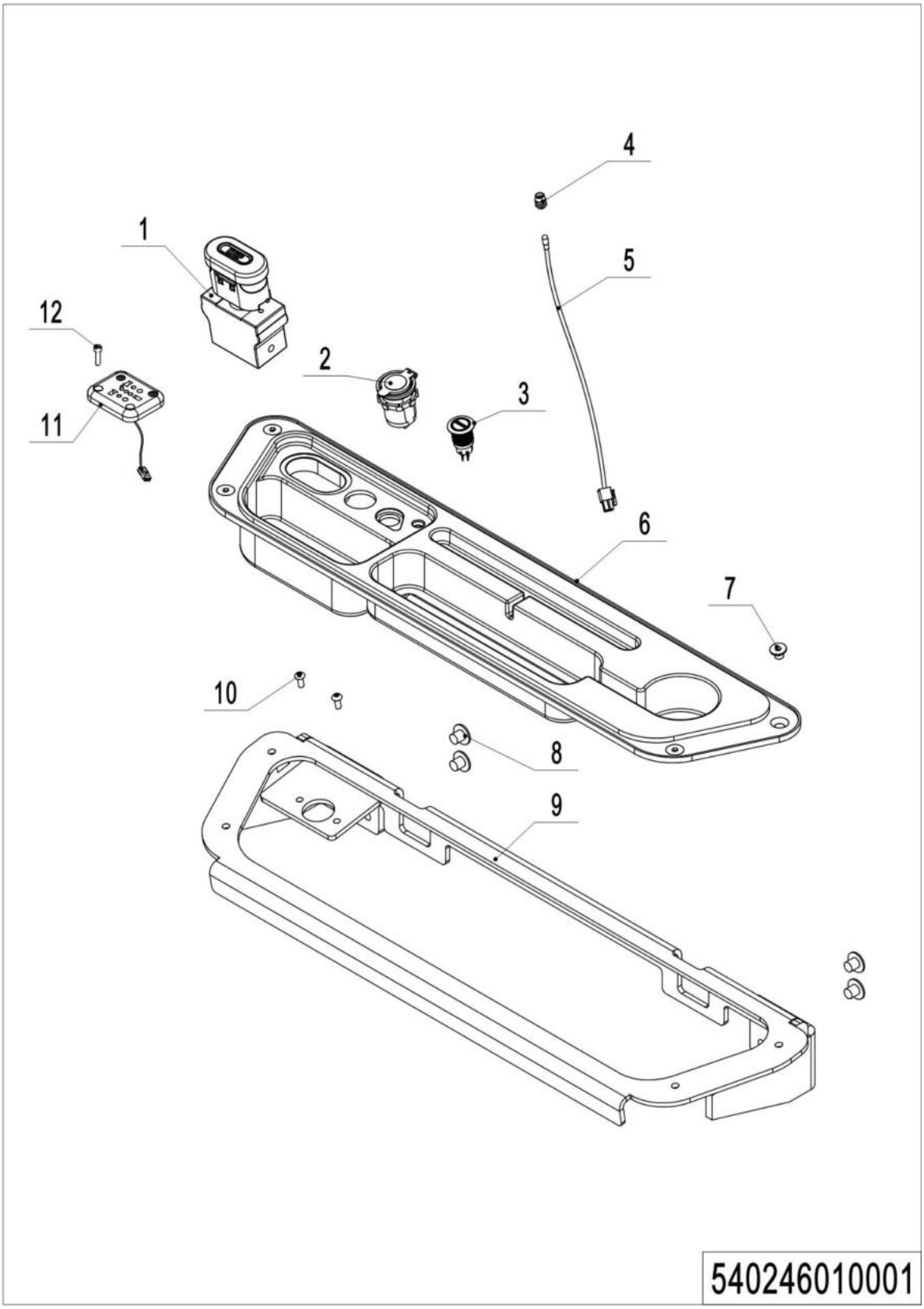

1=Supply as package; 2=Supply with limit; 3=Phasing out supply; 4=Supply as assembly; 5=Check other lists.

06 Control panel assembly (EN1175:2020) (540246010001)

No.	Item Code	Mark	Item Description	Qty.	Substitute	Note
1	920200100032		Emergency Button	1		
2	921000200859		USB Charger	1		
3	532233010023		Switch	1		
4	922000100024		Lamp Holder	1		
5	532298510006		Indicator Light	1		
6	532210020009		Dashboard	1		
7	910200400023	1	Screw M8x10	4		
8	941100100005		Screw M10x15	4		
9	532210010001		Mounting Plate	1		
10	910200300012	1	Screw M5x12	2		
11	920400300024		Socket	1		
12	910200200015	1	Screw M4x16	3		

06 Control panel assembly (540246010002)

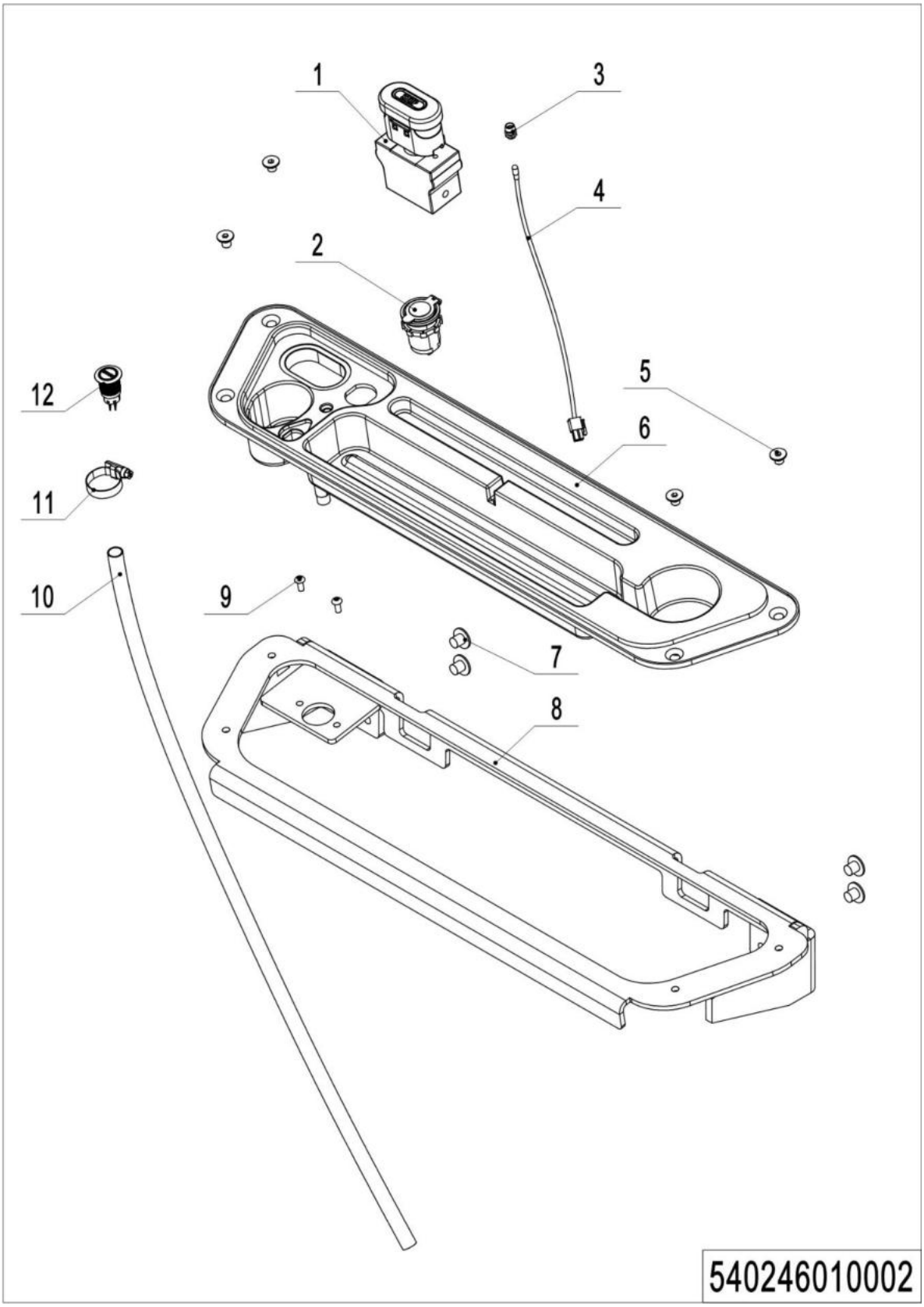

1=Supply as package; 2=Supply with limit; 3=Phasing out supply; 4=Supply as assembly; 5=Check other lists.

06 Control panel assembly (540246010002)

No.	Item Code	Mark	Item Description	Qty.	Substitute	Note
1	920200100009		Emergency Button	1		
2	921000200859		USB Charger	1		
3	922000100024		Lamp Holder	1		
4	532298510006		Indicator Light	1		
5	910200400023	1	Screw M8x10	4		
6	532210020001		Dashboard	1		
7	941100100005		Screw M10x15	4		
8	532210010001		Mounting Plate	1		
9	910200300012	1	Screw M5x12	2		
10	532210020008		Pipe	1		
11	911000600008		Hose Clamp	1		
12	532233010023		Switch	1		

Chapter 4: Steering system, braking system and wheels

01 Tiller (563046011000)

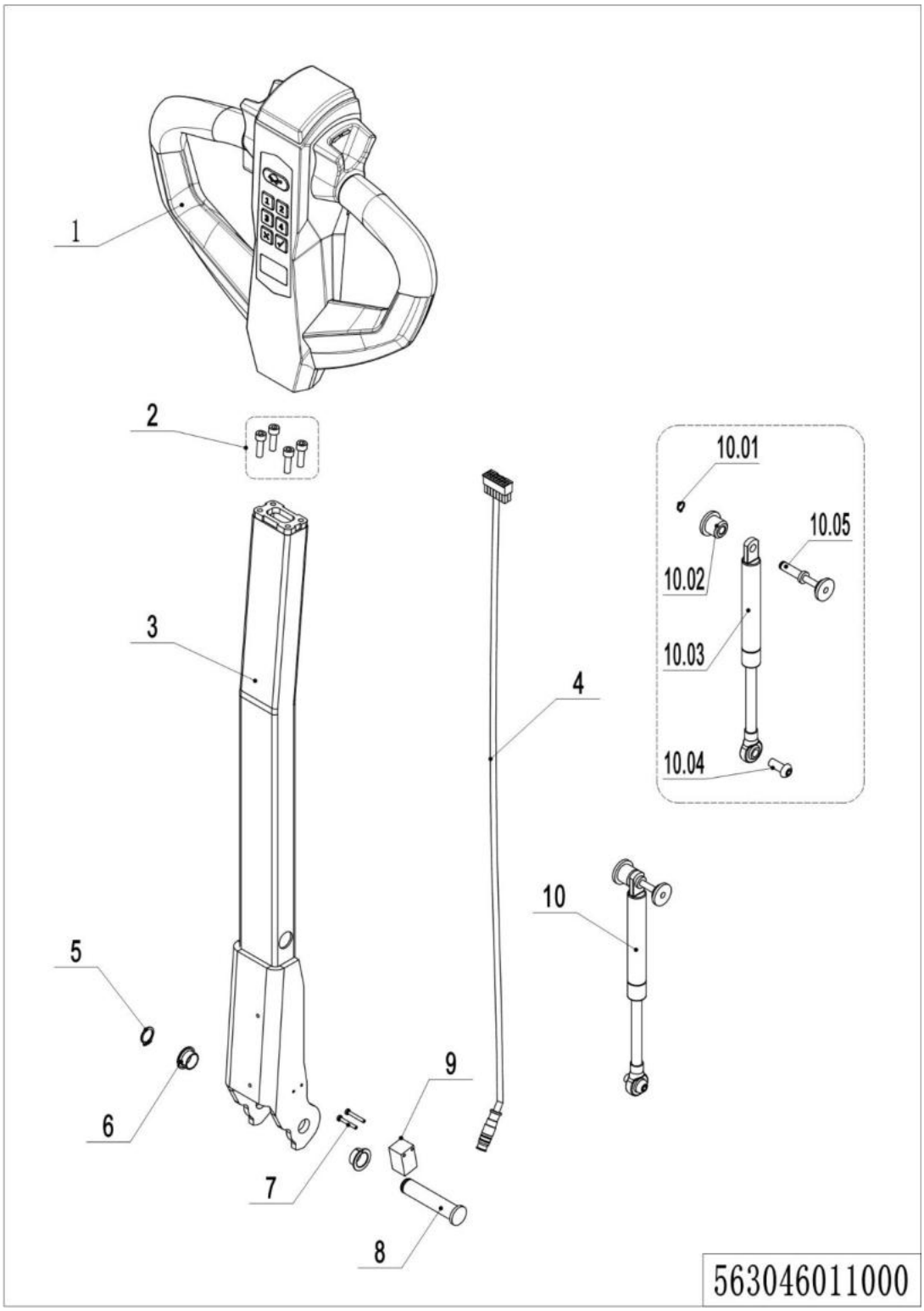

01 Tiller （563046011000）

No.	Item Code	Mark	Item Description	Qty.	Substitute	Note
1	922100100192		Tiller	1		
2	910200200036	1	Screw M6x20	4		
3	532211010000		Tiller Rod	1		
4	562333010009		Wire Harness	1		
5	910401300006		Circlip	1		
6	940500200001		Bushing	2		
7	941101100001	1	Screw M3x22	2		
8	508011020004		Pin	1		
9	505633510001		Proximity Switch	1		
10	532298510039		Gas Spring	1		
10.1	910401300001		Circlip	1		
10.2	508011020005		Fixing Base	1		
10.3	532211020003		Gas Spring	1		
10.4	941100100011	1	Screw M8x22	1		
10.5	508011010002		Pin	1		

02 Tiller head (SHIJIA) (563046011010)

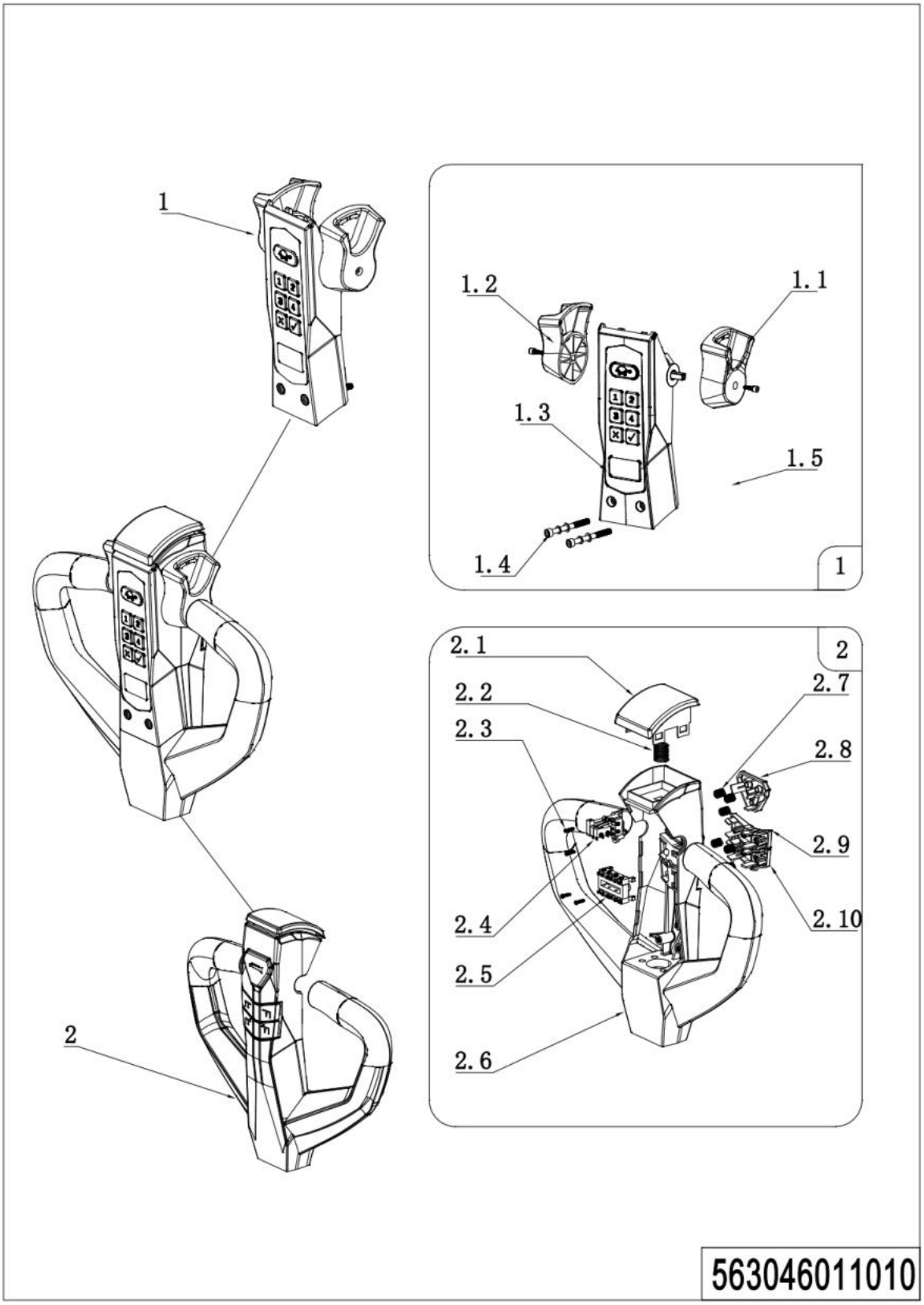

1=Supply as package; 2=Supply with limit; 3=Phasing out supply; 4=Supply as assembly; 5=Check other lists.

02 Tiller head (SHIJIA) (563046011010)

No.	Item Code	Mark	Item Description	Qty.	Substitute	Note
1	563098510000		Accelerator assembly	1		
1.1	532298520020		Dial Key	1		
1.2	532298520021		Dial Key	1		
1.3	563098510001		PCB assembly	1		
1.4	509998520065		Bolt M5X50	2		
1.5	532298520023		ID Card	1		
2	540298510001		Tiller Assembly	1		
2.1	540298520001		Button	1		
2.2	509998520071		Spring	1		
2.3	509998520070		Screw	5		
2.4	540298520002		Wire Harness Kit	1		
2.5	509998520032		Wire Harness Kit	1		
2.6	540298520003		Tiller	1		
2.7	509998520029		Spring	7		
2.8	540298520004		Button	1		
2.9	563098510002		Lifting button	1		
2.10	563098510003		Lowering button	1		

03 Load wheel (563046017001)

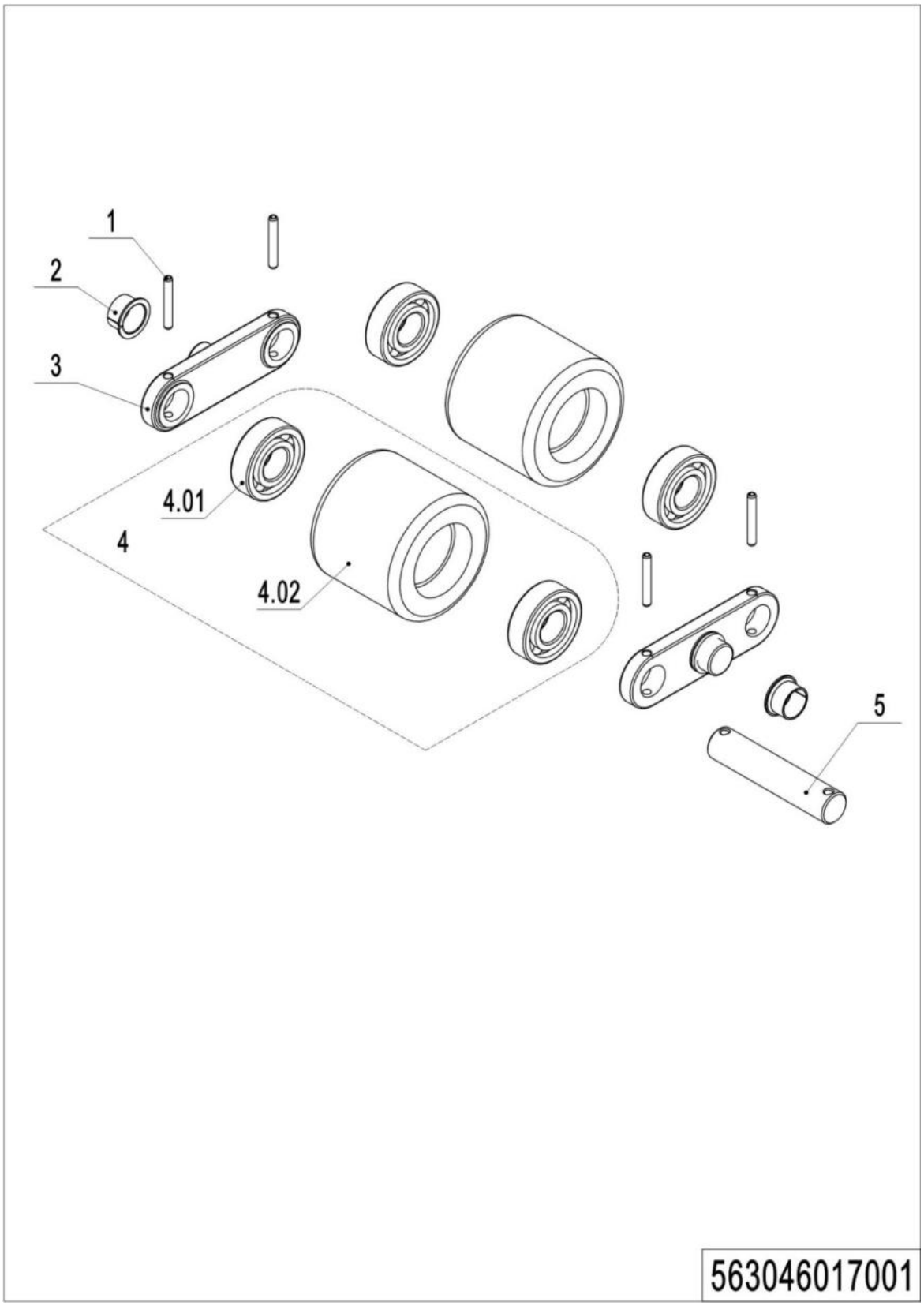

1=Supply as package; 2=Supply with limit; 3=Phasing out supply; 4=Supply as assembly; 5=Check other lists.

03 Load wheel (563046017001)

No.	Item Code	Mark	Item Description	Qty.	Substitute	Note
1	910600500004		Spring Pin 5x35	8		
2	940500200038		Bushing	4		
3	563017020001		Plate	4		
4	502398510002		Wheel Kits	4		
4.01	910700200019		Bearing	8		
4.02	940300300005		WheelΦ80x70	4		
5	502317020001		Wheel Axle	4		

04 Side wheel (532246016501)

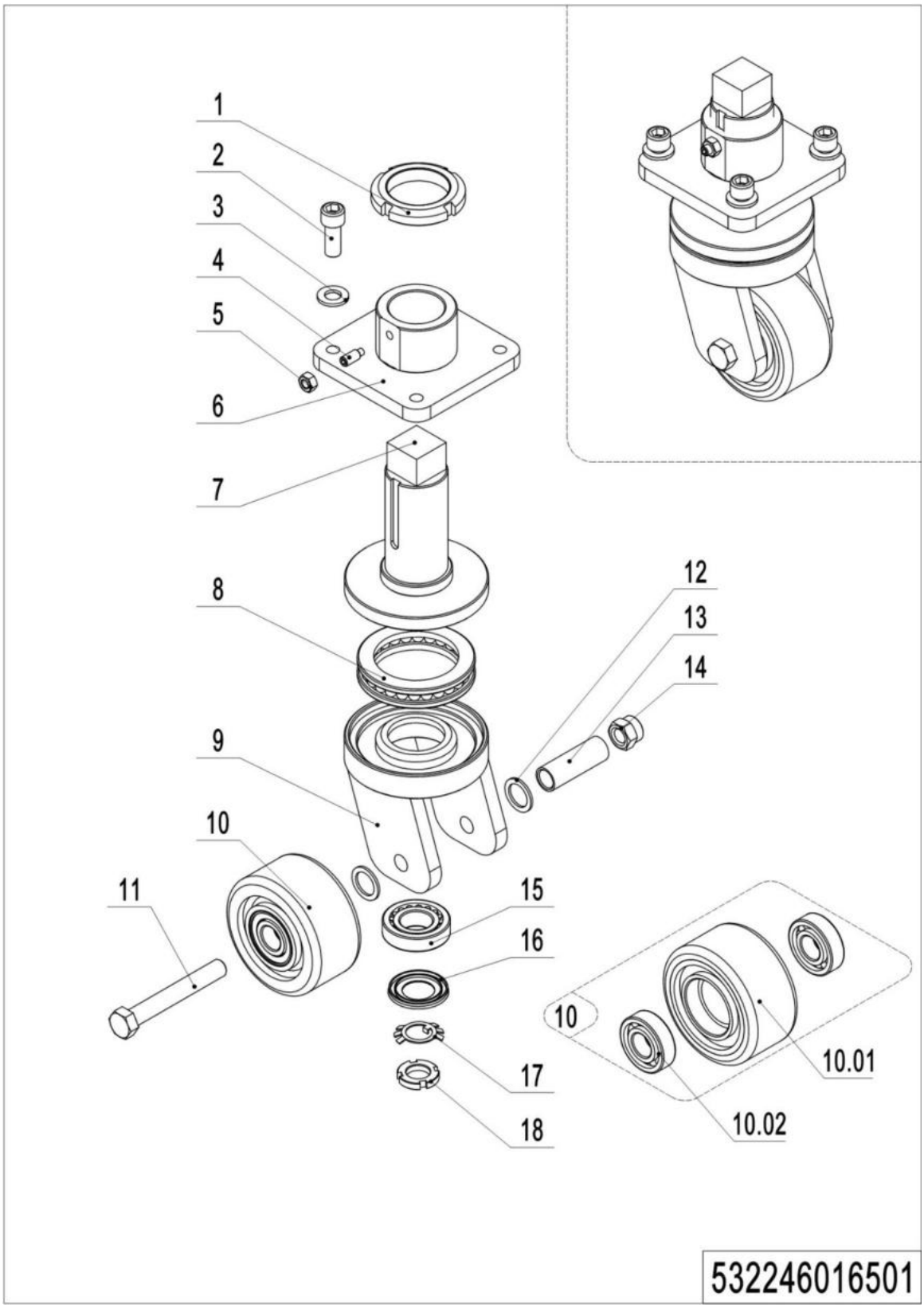

04 Side wheel (532246016501)

No.	Item Code	Mark	Item Description	Qty.	Substitute	Note
--	532298510041		Caster Assembly	1		
1	941100900004	1	Nut	1		
2	910200200098	1	Screw M12x30	4		
3	910400100008	1	Flat Washer	4		
4	910201000012	1	Screw M8x20	1		
5	910300100006	1	Nut	1		
6	532216510003	2	Fixing Base	1		
7	532216510002	2	Axle	1		
8	910700700011		Bearing	1		
9	532216510001	2	Wheel Carrier	1		
10	532298510004		Caster Kit	1		
10.01	940300300030		WheelΦ100x50	1		
10.02	910700200019		Bearing	2		
11	910100100069	1	Bolt M14x100	1		
12	940600500005	1	Washer	4		
13	532216520006		Sleeve	1		
14	910300500007	1	Nut	1		
15	910700600001		Bearing	1		
16	941101000010		Dust Cap	1		
17	910400900002	1	Lock Washer	1		
18	910300700008	1	Nut	1		

05 Manual steering (532246031201)

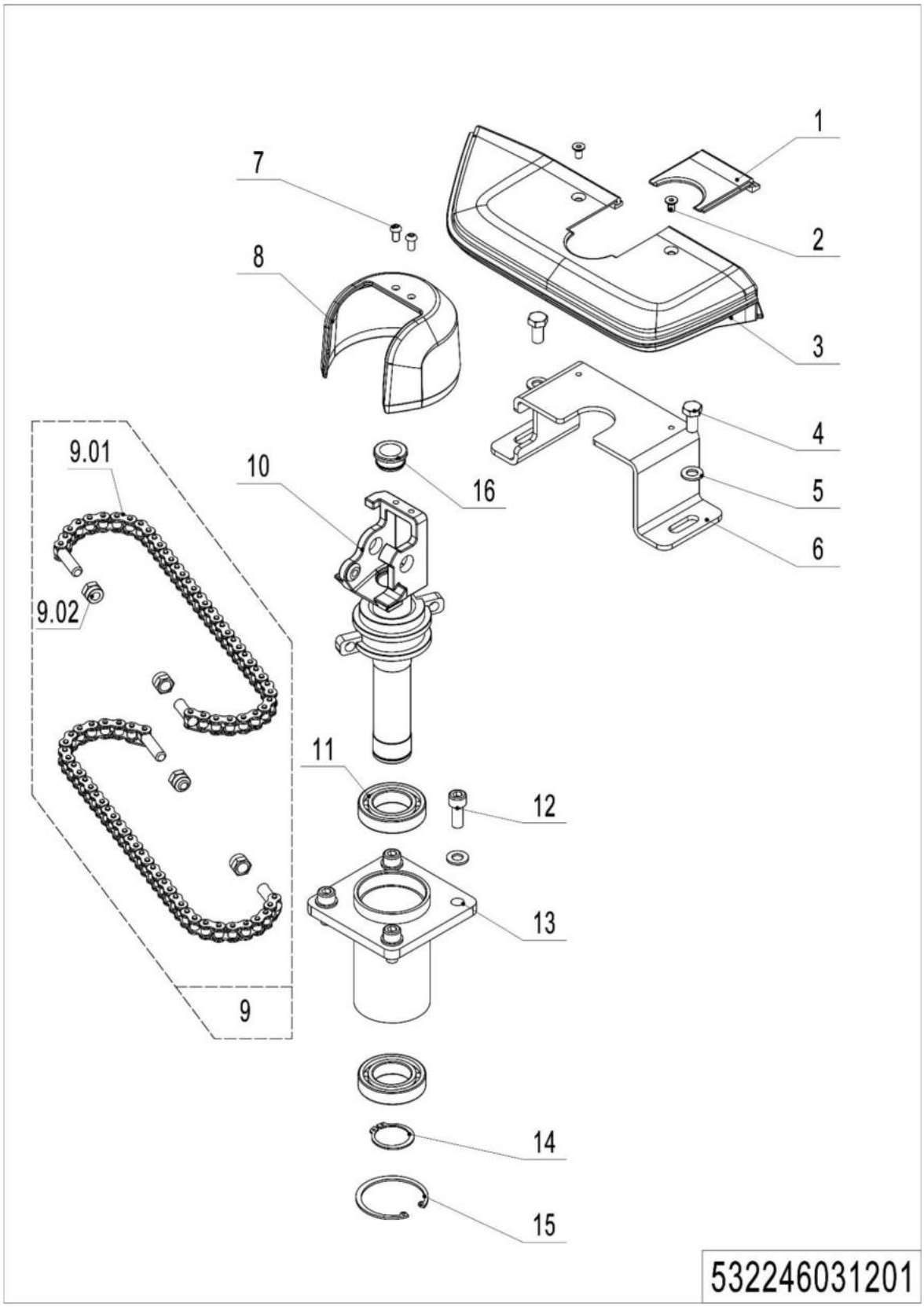

1=Supply as package; 2=Supply with limit; 3=Phasing out supply; 4=Supply as assembly; 5=Check other lists.

05 Manual steering （532246031201）

No.	Item Code	Mark	Item Description	Qty.	Substitute	Note
1	532231220011		Panel	1		
2	910200400016	1	Screw M6x12	2		
3	532231220010		Panel	1		
4	910100300036	1	Bolt M10x25	2		
5	910400100007	1	Flat Washer	6		
6	532231220008		Pedestal	1		
7	910200300017	1	Screw M6x12	2		
8	532211020001		Guard Cover	1		
9	532298510071		Chain Kit	2		
9.01	532231210009		Transmission Kit	2		
9.02	910300500005		Nut	4		
10	532231210006		Tiller Spindle	1		
11	910700200007		Bearing	2		
12	910200200076	1	Screw M10x25	4		
13	532231210003		Connecting Bracket	1		
14	910401300018	1	Circlip	1		
15	910401400018	1	Circlip	1		
16	532231220023		Guard Sleeve	1		

Chapter 5: Mast system

01 Two stage FL mast (563046043501)

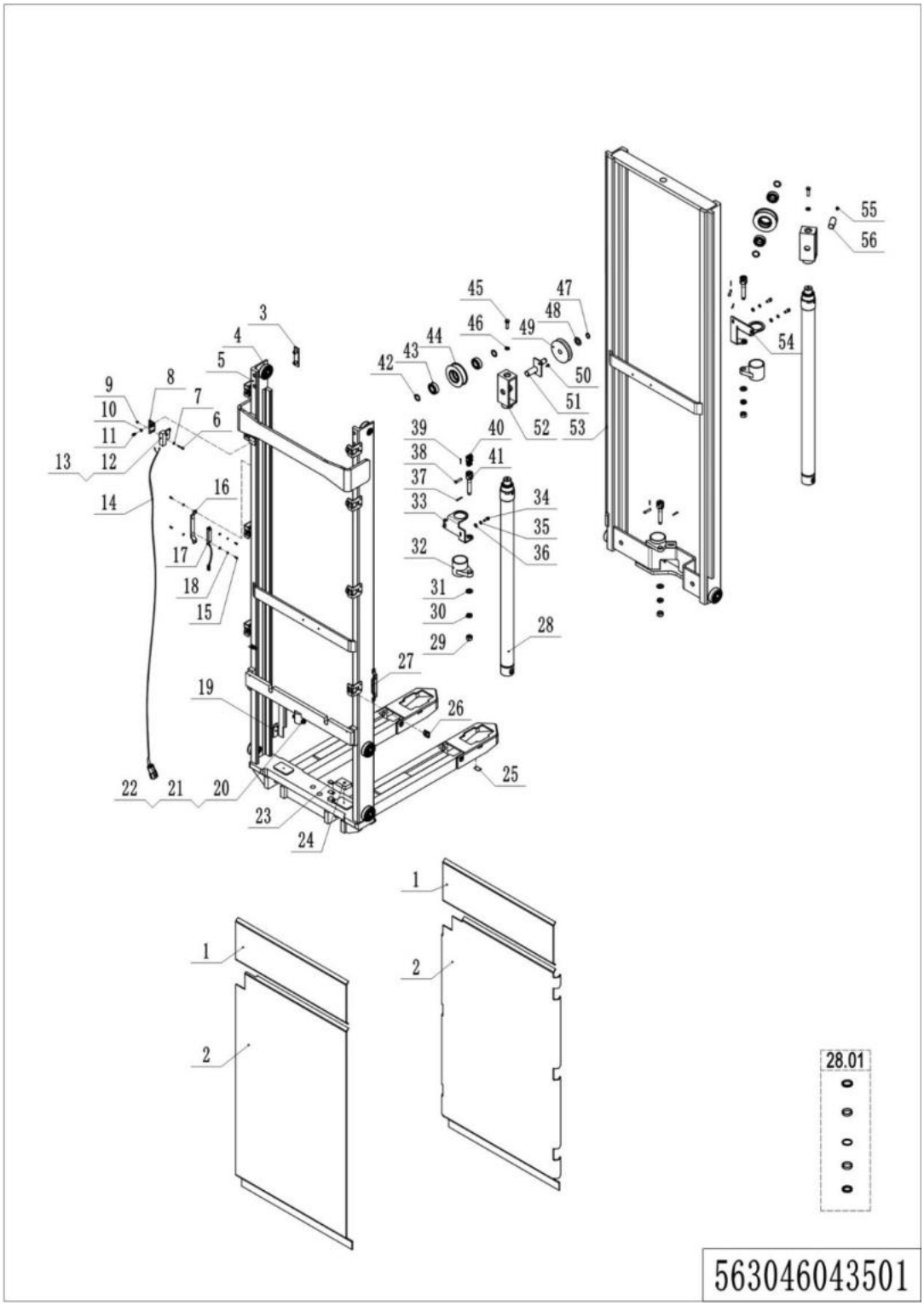

01 Two stage FL mast (563046043501)

No.	Item Code	Mark	Item Description	Qty.	Substitute	Note
1	562344020003		Guard Plate	1		
2	562344020010		Guard Plate	1		2600
2	562344020009		Guard Plate	1		2900
2	562344020008		Guard Plate	1		3200
2	562344020002		Guard Plate	1		3600
2	562351520003		Guard Plate	1		2600
2	562351520004		Guard Plate	1		2900
2	562351520005		Guard Plate	1		3200
2	562351520006		Guard Plate	1		3600
3	255044020131		Subplate	2		
4	940200300003		Compound Roller	8		
5	563043510007		Outer Mast	1		2600,570x1150
5	563043510008		Outer Mast	1		2600,685x1150
5	563043510005		Outer Mast	1		2900,570x1150
5	563043510006		Outer Mast	1		2900,685x1150
5	563043510003		Outer Mast	1		3200,570x1150
5	563043510004		Outer Mast	1		3200,685x1150
5	563043510001		Outer Mast	1		3600,570x1150
5	563043510002		Outer Mast	1		3600,685x1150
6	910200200152	1	Screw M4x35	2		
7	910400100003	1	Flat Washer	12		
8	532244020012		Mounting Plate	1		
9	910300500001	1	Nut	2		
10	910400100005	1	Flat Washer	10		
11	910200200033	1	Screw M6x12	4		
12	920200300003		Microswitch	1		
13	920200300007		Guard Cover	1		
14	532233010002		Wire Harness	1		
15	910200200013		Screw M4x10	8		
16	534744520080		Guard Cover	2		

01 Two stage FL mast (563046043501) continuation

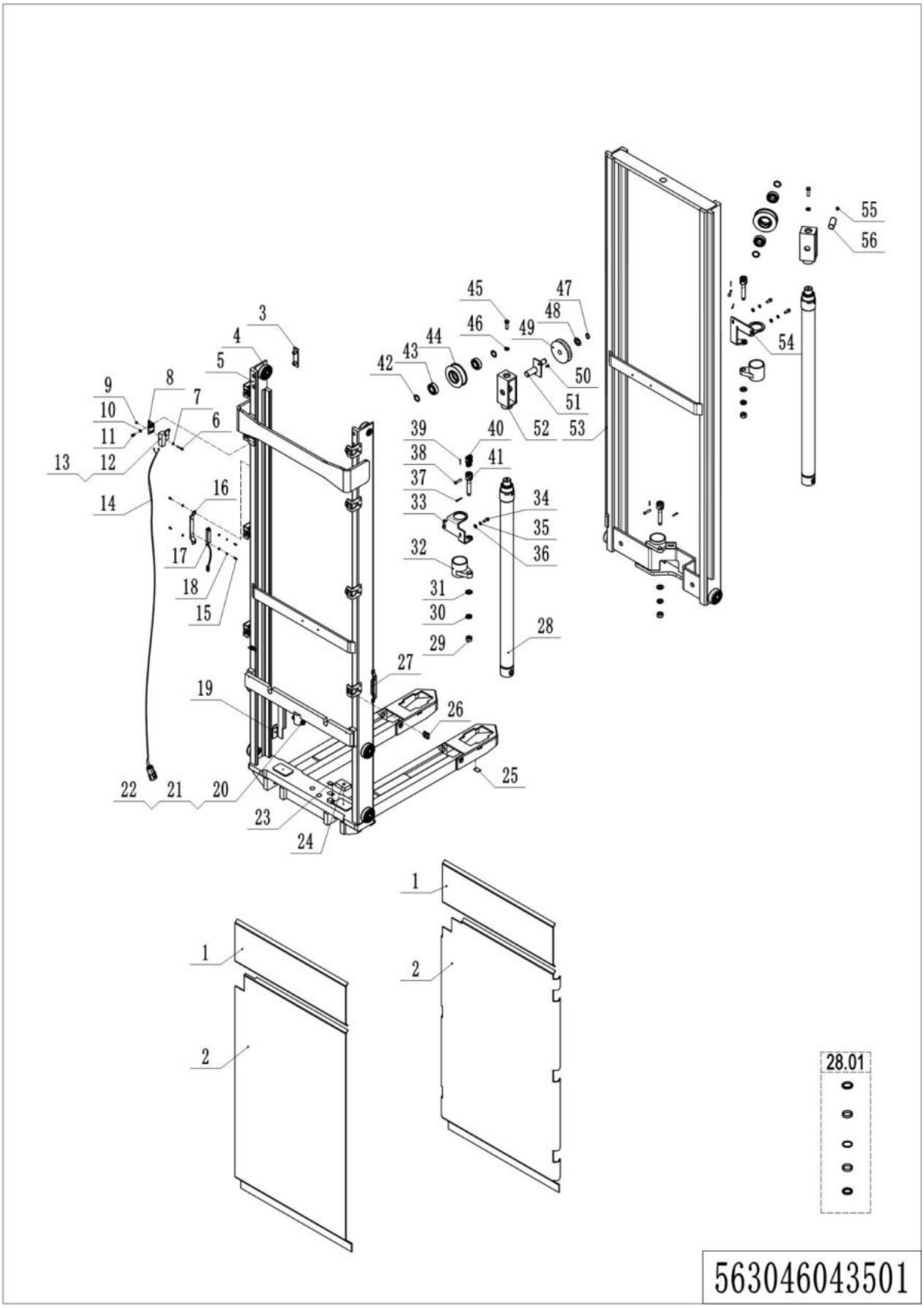

01 Two stage FL mast (563046043501) continuation

No.	Item Code	Mark	Item Description	Qty.	Substitute	Note
17	540333510021		Magnetic Switch	1		
18	910400500003		Spring Washer	4		
19	563043520006		Plate	1		
20	910400100007		Flat Washer	2		
21	910200200083		Screw M10x60	1		
22	910300500005		Nut	1		
23	540324020004		Subplate	2		
24	534721520024		Crash Pad	1		
25	563043520017		Washer	8		
26	940400300001		Spring Buckle	8		2900,3200,3600
26	940400300001		Spring Buckle	6		2600
27	535933510020		Magnetic Switch	1		
28	540243510013		Cylinder	2		2600
28	540243510012		Cylinder	2		2900
28	540243510011		Cylinder	2		3200
28	540243510003		Cylinder	2		3600
28.01	540298510002		Seal Kit	2		
29	910300200008		Nut	3		
30	910300400006		Nut	3		
31	910400100010		Flat Washer	3		
32	540243510014		Pull Rod Bracket	2		
33	540243520015		Bracket	1		2600
33	540243520013		Bracket	1		2900,3200,3600
34	910200200057		Screw M8x20	4		
35	910400500006		Spring Washer	4		
36	910400100006		Flat Washer	4		
37	910600600034		Cotter Pin	3		
38	941100800007		Pin	3		

01 Two stage FL mast (563046043501) continuation

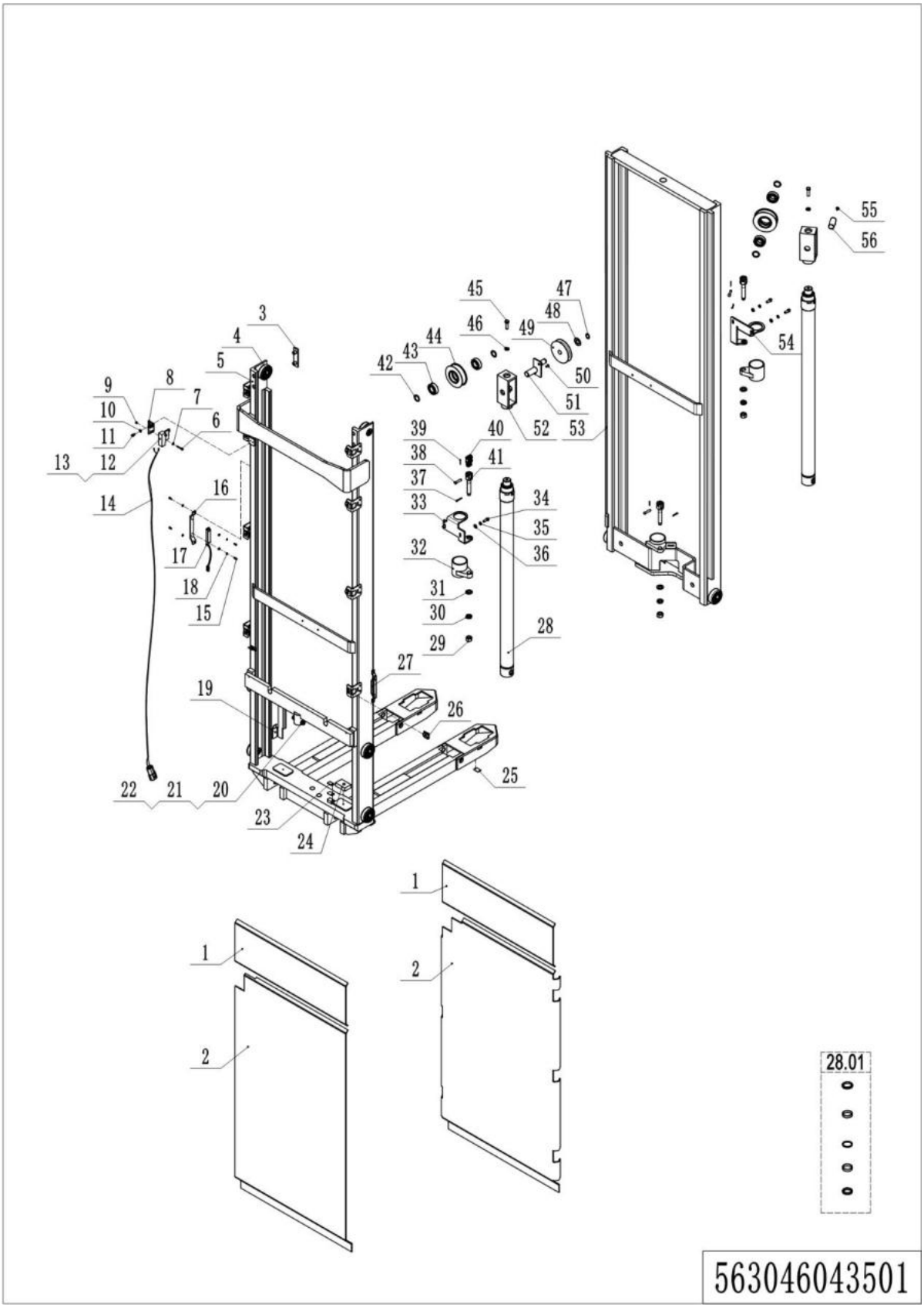

1=Supply as package; 2=Supply with limit; 3=Phasing out supply; 4=Supply as assembly; 5=Check other lists.

01 Two stage FL mast (563046043501) continuation

No.	Item Code	Mark	Item Description	Qty.	Substitute	Note
39	910600600015		Cotter Pin	3		
40	540243510018		Chain	1		2600
40	533243510031		Chain	1		2900
40	533243510009		Chain	1		3200
40	540243510016		Chain	1		3600
41	533243520008		Chain Bolt	3		
42	940600500006		Washer	4		
43	910700200020		Bearing	4		
44	940200400002		Sprocket	2		
45	910100300049		Bolt M12x25	2		
46	910400500008		Spring Washer	2		
47	910401300011		Circlip	1		
48	910400100012		Flat Washer	1		
49	532643520132		Pulley	1		
50	910200300017		Screw M6x12	1		
51	540243510004		Pin	1		
52	532243010002		Sprocket Frame	2		
53	563043510012		Inner Mast	1		2600
53	563043510011		Inner Mast	1		2900
53	563043510010		Inner Mast	1		3200
53	563043510009		Inner Mast	1		3600
54	540243520014		Bracket	1		
55	910200400016		Screw M6x12	1		
56	533243510005		Pin	1		

02 Pull rod assembly (563046043502)

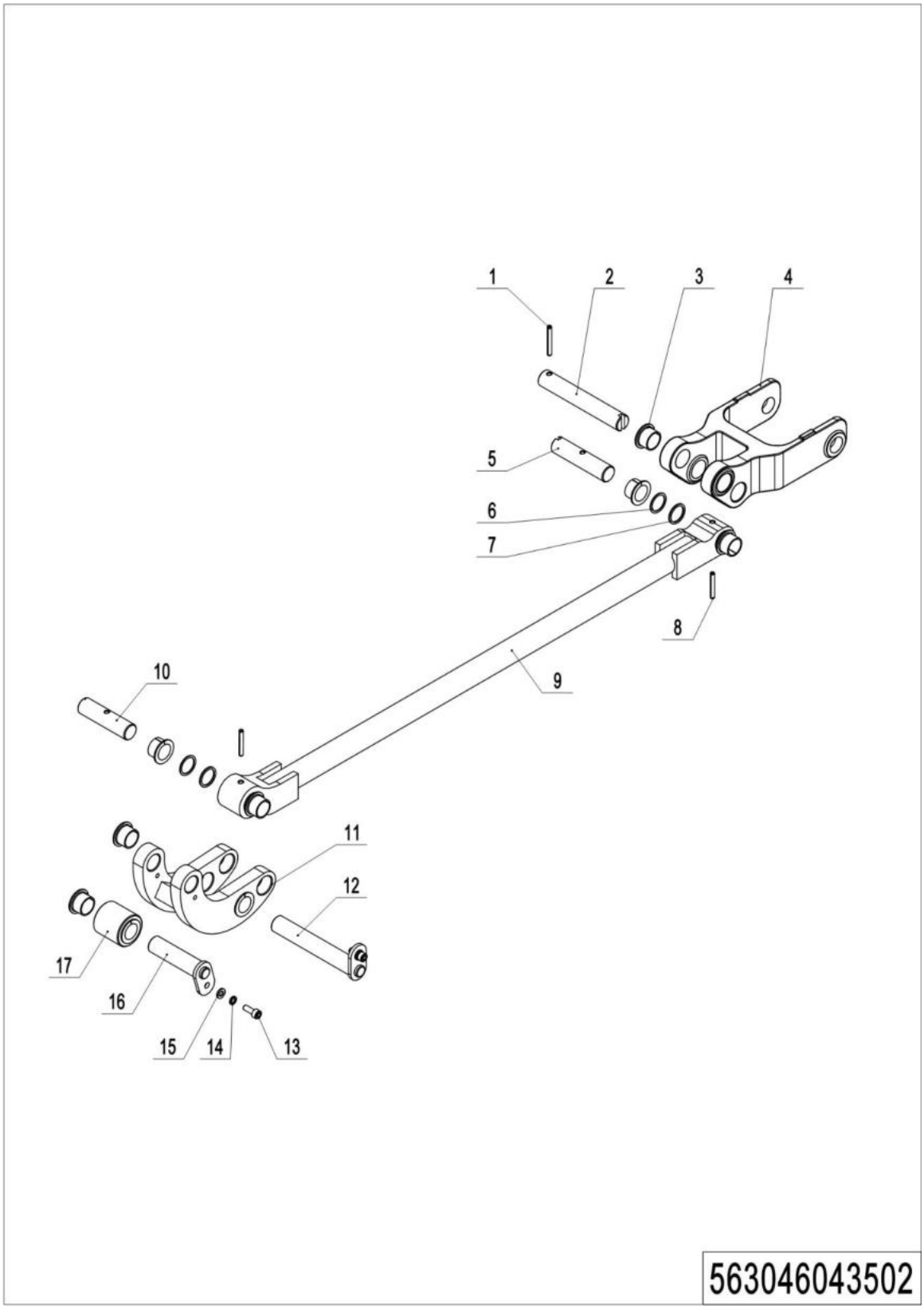

1=Supply as package; 2=Supply with limit; 3=Phasing out supply; 4=Supply as assembly; 5=Check other lists.

02 Pull rod assembly (563046043502)

No.	Item Code	Mark	Item Description	Qty.	Substitute	Note
1	910600400028		Spring Pin 5x40	2		
2	562038520025		Axle	2		
3	940500200041		Bushing	20		
4	563043520018		Frame of roller	2		
5	562038520024		Pull Rod Axle	2		
6	940600500013		Washer	8		
7	940600500014		Washer	8		
8	910600400027		Spring Pin 5x35	2		
9	562344010007		Pull Rod	2		
10	562038520028		Pull Rod Axle	2		
11	562344010003		Connecting Plate	2		
12	562038510003		Pin	2		
13	910200200035		Screw M6x16	4		
14	910400500005		Spring Washer	4		
15	910400100005		Flat Washer	4		
16	562038510005		Pin	2		
17	562344020006		Roller	2		

Chapter 6: Electrical parts and wire harness

01 Wire harness (563046033001)

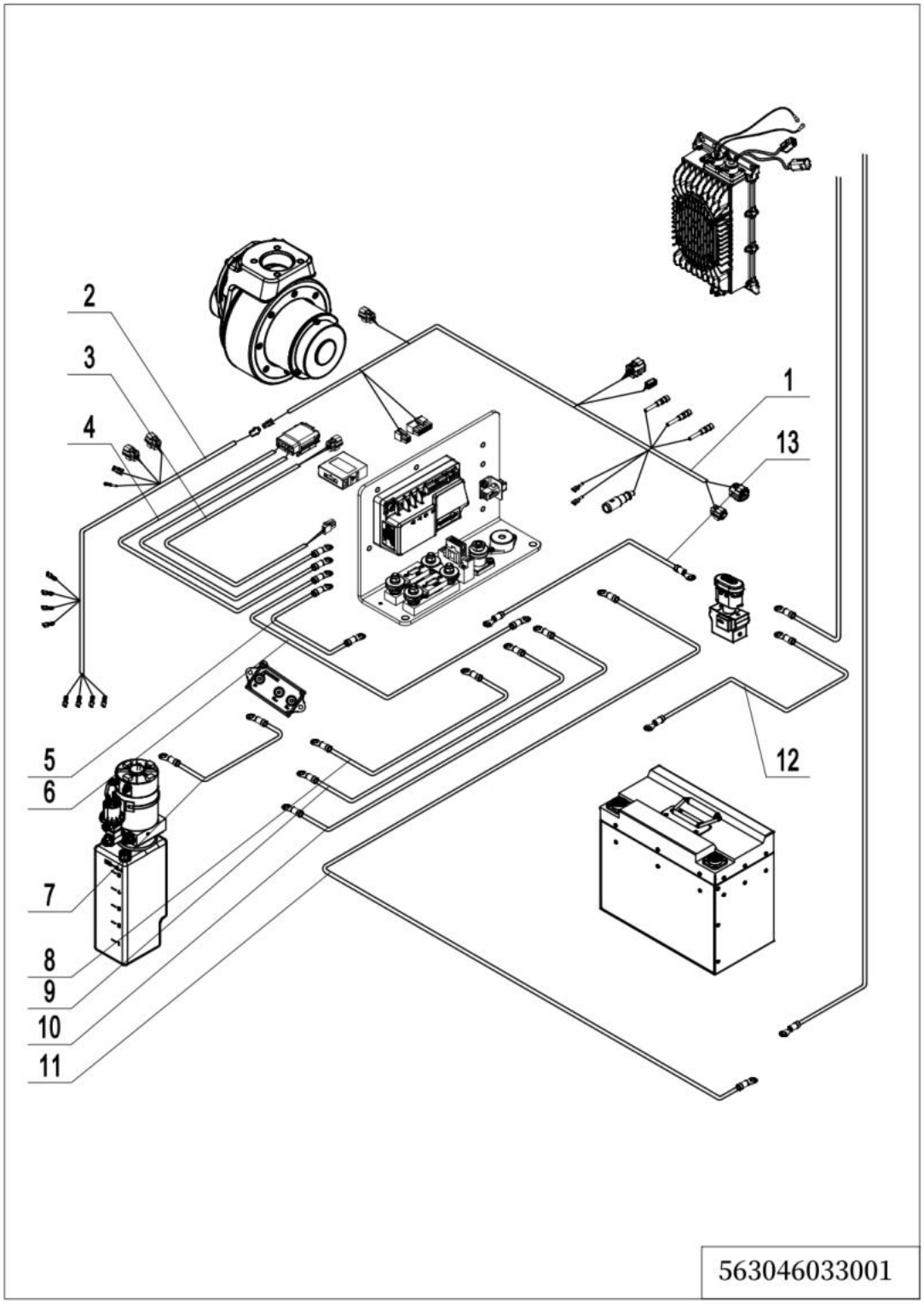

1=Supply as package; 2=Supply with limit; 3=Phasing out supply; 4=Supply as assembly; 5=Check other lists.

01 Wire harness (563046033001)

No.	Item Code	Mark	Item Description	Qty.	Substitute	Note
1	563033010011		Wire Harness	1		lithium battery
1	563033010007		Wire Harness	1		lead-acid battery
2	563033010001		Wire Harness	1		
3	532233010035		Wire Harness	1		
4	532233010036		Wire Harness	1		
5	532233010037		Cables	1		
6	532233010038		Cables	1		
7	563033010006		Cables	1		PB2+
8	563033010005		Cables	1		PB1+
9	563033010004		Cables	1		B1-
10	532233010009		Cables	1		PB-
11	532233010021		Cables	1		B-
12	563033010002		Cables	1		B+
13	532233010016		Cables	1		FU+

02 Electrical control unit (563046036301)

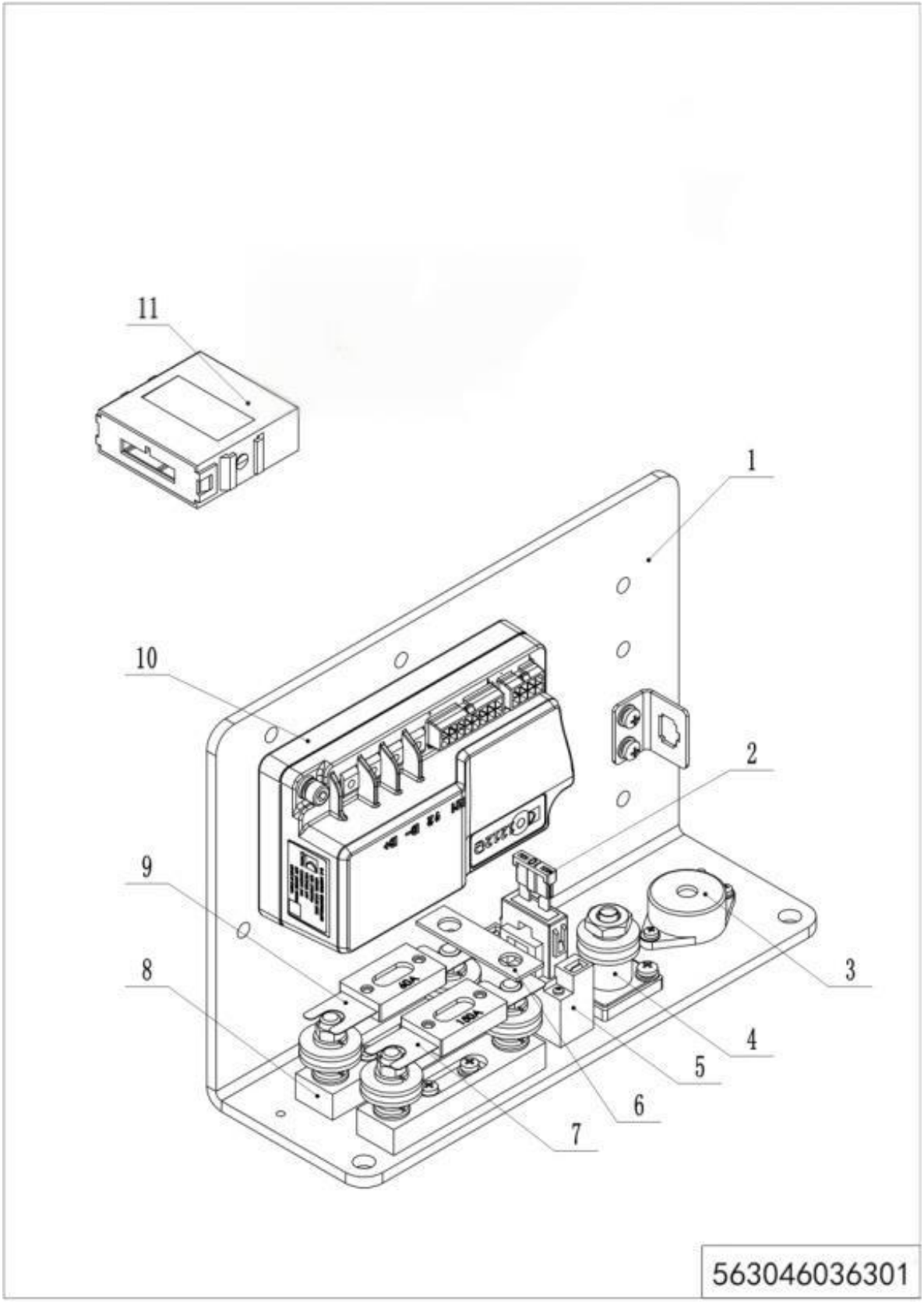

1=Supply as package; 2=Supply with limit; 3=Phasing out supply; 4=Supply as assembly; 5=Check other lists.

02 Electrical control unit (563046036301)

No.	Item Code	Mark	Item Description	Qty.	Substitute	Note
1	532233020001		Mounting Plate	1		
2	920100200002		Fuse	1		
3	920500100007		Horn Buzzer	1		
4	920100400001		Fuse Holder	1		
5	920100400006		Fuse Holder	1		
6	505633020003		Copper Busbar	1		
7	920100100007		Fuse	1		
8	920100400002		Fuse Holder	2		
9	920100100003		Fuse	1		
10	563033010008		Controller	1		
11	921200100057		Module DTJ00410	1		

03 Charger (lead-acid battery) (563046036501)

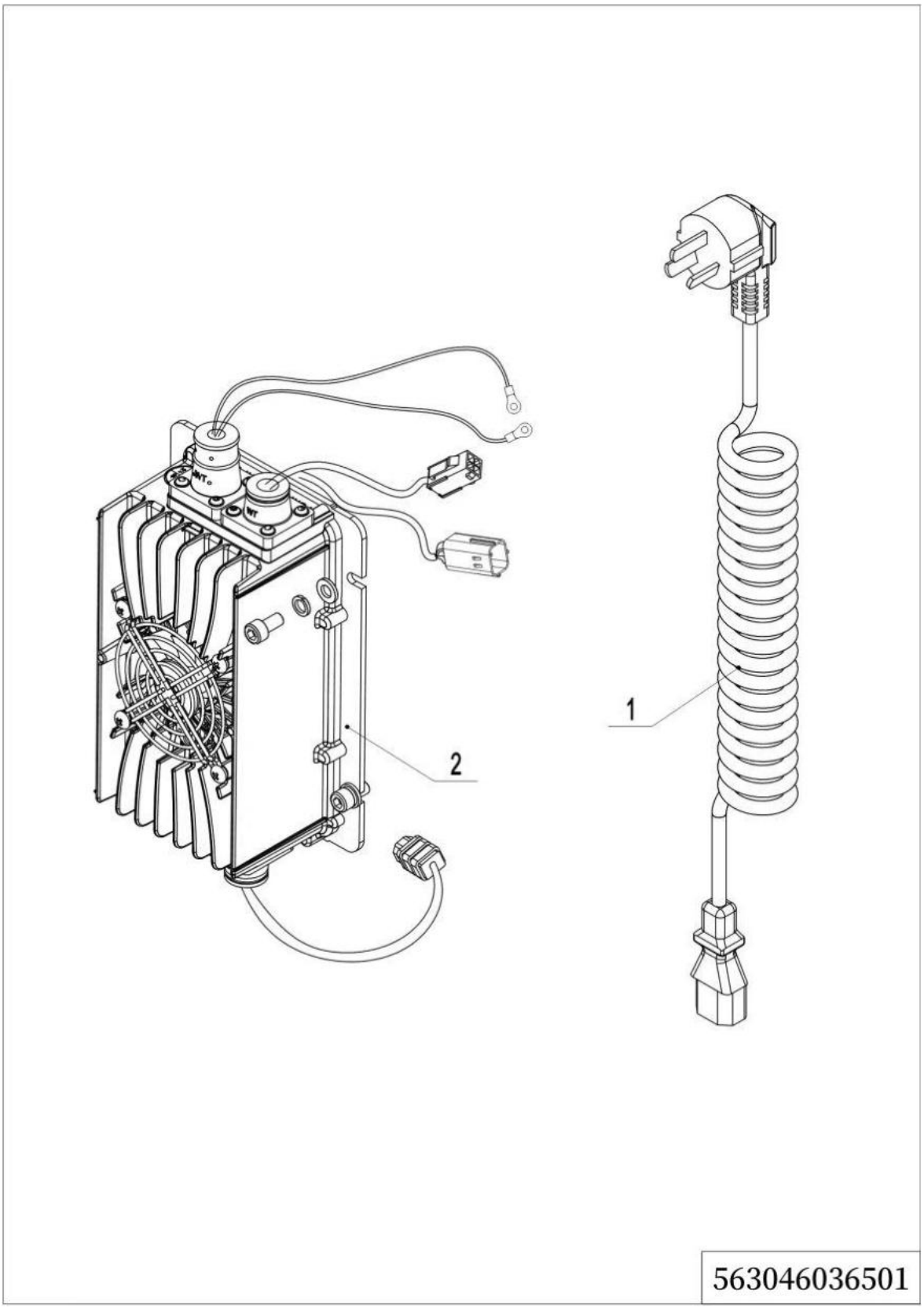

1=Supply as package; 2=Supply with limit; 3=Phasing out supply; 4=Supply as assembly; 5=Check other lists.

03 Charger (lead-acid battery) (563046036501)

No.	Item Code	Mark	Item Description	Qty.	Substitute	Note
1	921500200008		Spring Cable(Asia)	1		
1	921500200005		Spring Cable(EU)	1		
1	921500200004		Spring Cable(ENG)	1		
1	921500200078		Spring Cable(USA)	1		
1	921500200006		Spring Cable(ITA)	1		
1	921500200007		Spring Cable(CH)	1		
1	921500200029		Spring Cable(ISR)	1		
1	921500200065		Spring Cable3x0.75(RSA)	1		
1	921500200066		Spring Cable(IND)	1		
2	921000100105		Li-Charger24V25A	1		lithium battery
2	921000100051		Charger24V12A	1		lead-acid battery

Chapter 7: Special equipment

01 Load backrest (532246040501)

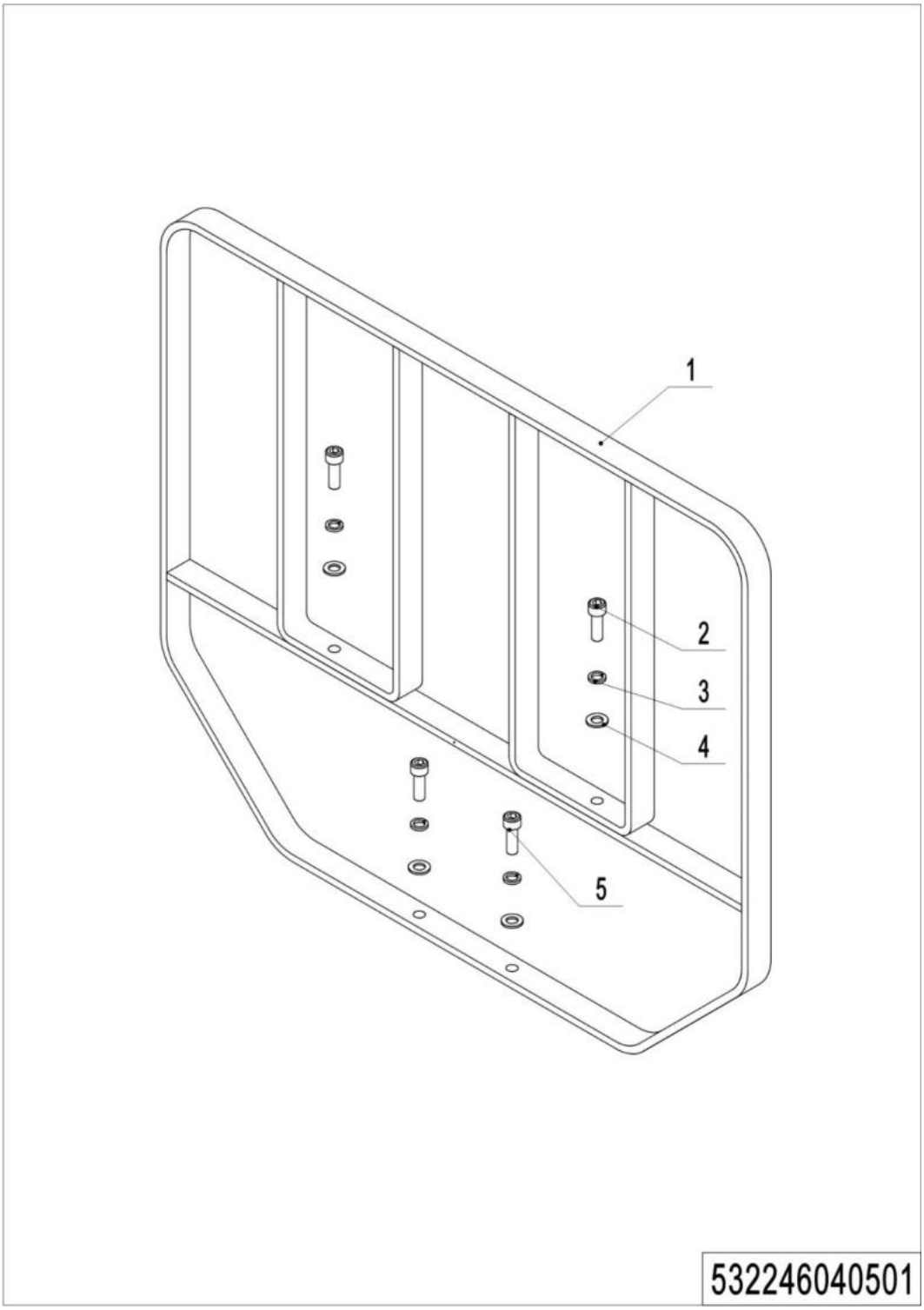

1=Supply as package; 2=Supply with limit; 3=Phasing out supply; 4=Supply as assembly; 5=Check other lists.

01 Load backrest （532246040501）

No.	Item Code	Mark	Item Description	Qty.	Substitute	Note
1	532640510001	2	Load Backrest	1		
2	910200200077	1	Screw M10x30	2		
3	910400500007	1	Spring Washer	4		
4	910400100007	1	Flat Washer	4		
5	910200200076	1	Screw M10x25	2		

Chapter 8: Others

01 Labels and decals (EU) (563046047002)

1=Supply as package; 2=Supply with limit; 3=Phasing out supply; 4=Supply as assembly; 5=Check other lists.

01 Labels and decals (EU) (563046047002)

No.	Item Code	Mark	Item Description	Qty.	Substitute	Note
1	532247020007		Label	1		
2	941200100004		Label	2		
3	563047520010		Load Capacity Diagram	1		2600
3	563047520011		Load Capacity Diagram	1		2900
3	563047520012		Load Capacity Diagram	1		3200
3	563047520013		Load Capacity Diagram	1		3600
3	563047520014		Load Capacity Diagram	1		
4	941200300019		Label	1		
5	563047520015		Truck data plate	1		2600
5	563047520016		Truck data plate	1		2900
5	563047520017		Truck data plate	1		3200
5	563047520018		Truck data plate	1		3600
6	941200300002		Label	1		
7	941200300003		Label	1		Inside
8	532247020000		Label	2		
9	941200100003		Label	1		
10	941200100006		Label	1		
11	941200300001		Label	1		

02 Labels and decals (USA) (563046047003)

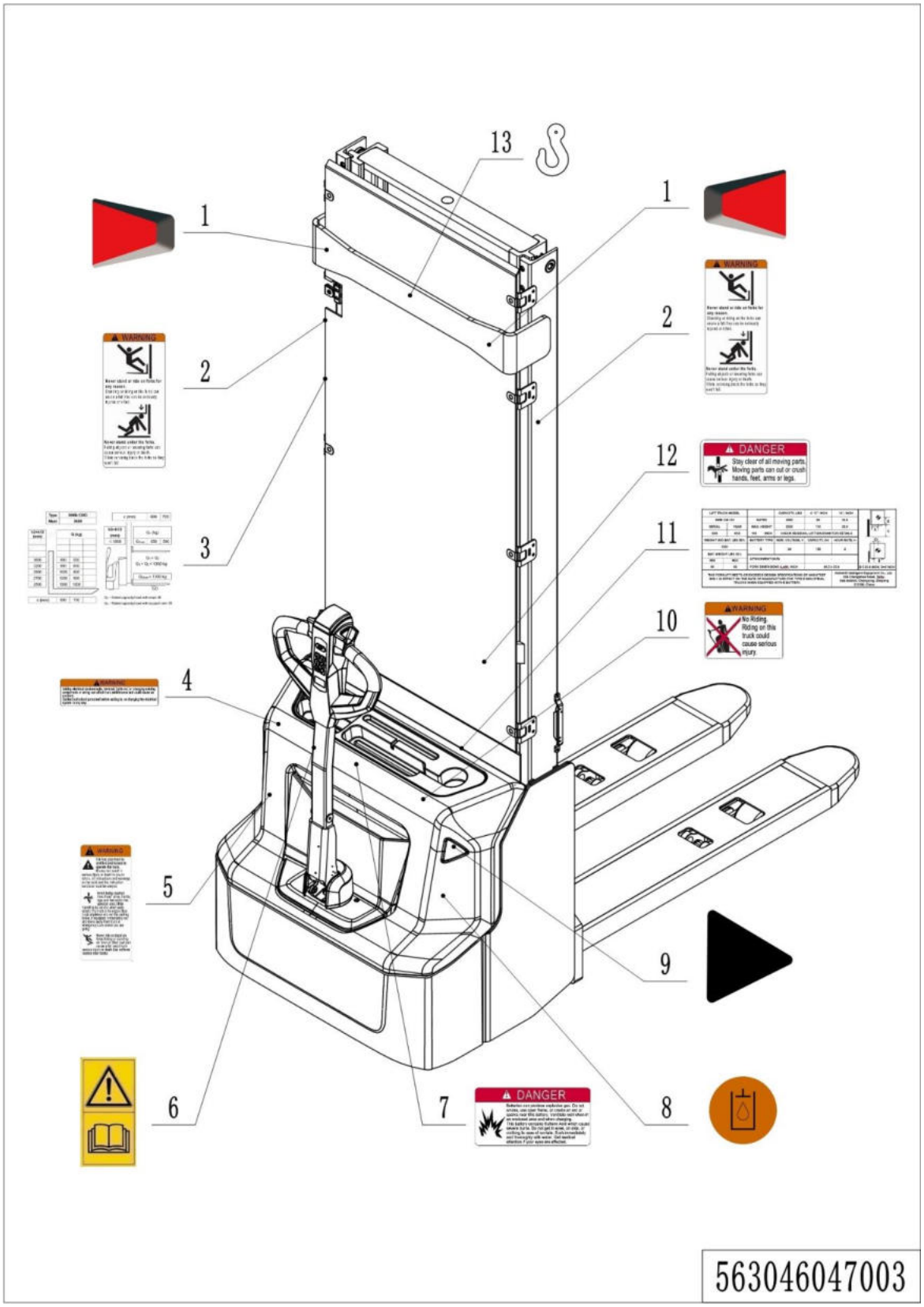

1=Supply as package; 2=Supply with limit; 3=Phasing out supply; 4=Supply as assembly; 5=Check other lists.

02 Labels and decals (USA) (563046047003)

No.	Item Code	Mark	Item Description	Qty.	Substitute	Note
1	532247020007		Label	1		
2	941200100016		Label	2		
3	563047520019		Load Capacity Diagram	1		2600
3	563047520020		Load Capacity Diagram	1		2900
3	563047520021		Load Capacity Diagram	1		3200
3	563047520022		Load Capacity Diagram	1		3600
3	563047520023		Load Capacity Diagram	1		
4	941200100010		Label	1		
5	941200100009		Label	1		
6	941200300002		Label	1		
7	941200100013		Label	1		
8	941200300003		Label	1		Inside
9	532247020000		Label	2		
10	941200100011		Label	1		
11	563047520024		Truck data plate	1		2600
11	563047520025		Truck data plate	1		2900
11	563047520026		Truck data plate	1		3200
11	563047520027		Truck data plate	1		3600
12	941200100014		Label	1		
13	941200300001		Label	1		

Appendix

01 Electrical circuit diagram (Lithium battery) (563046045501)

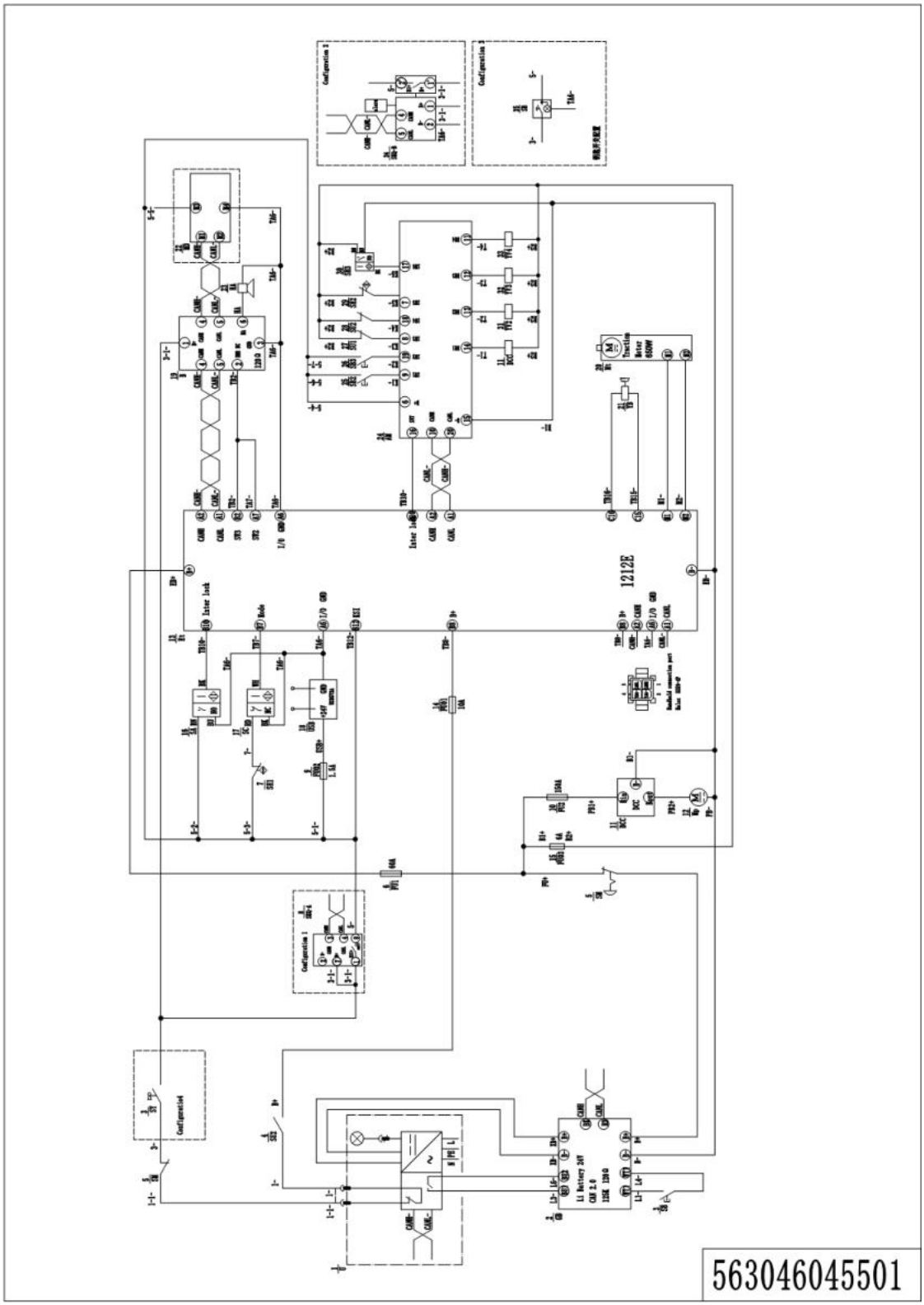

02 Electrical circuit diagram (lead-acid battery) (563046045502)

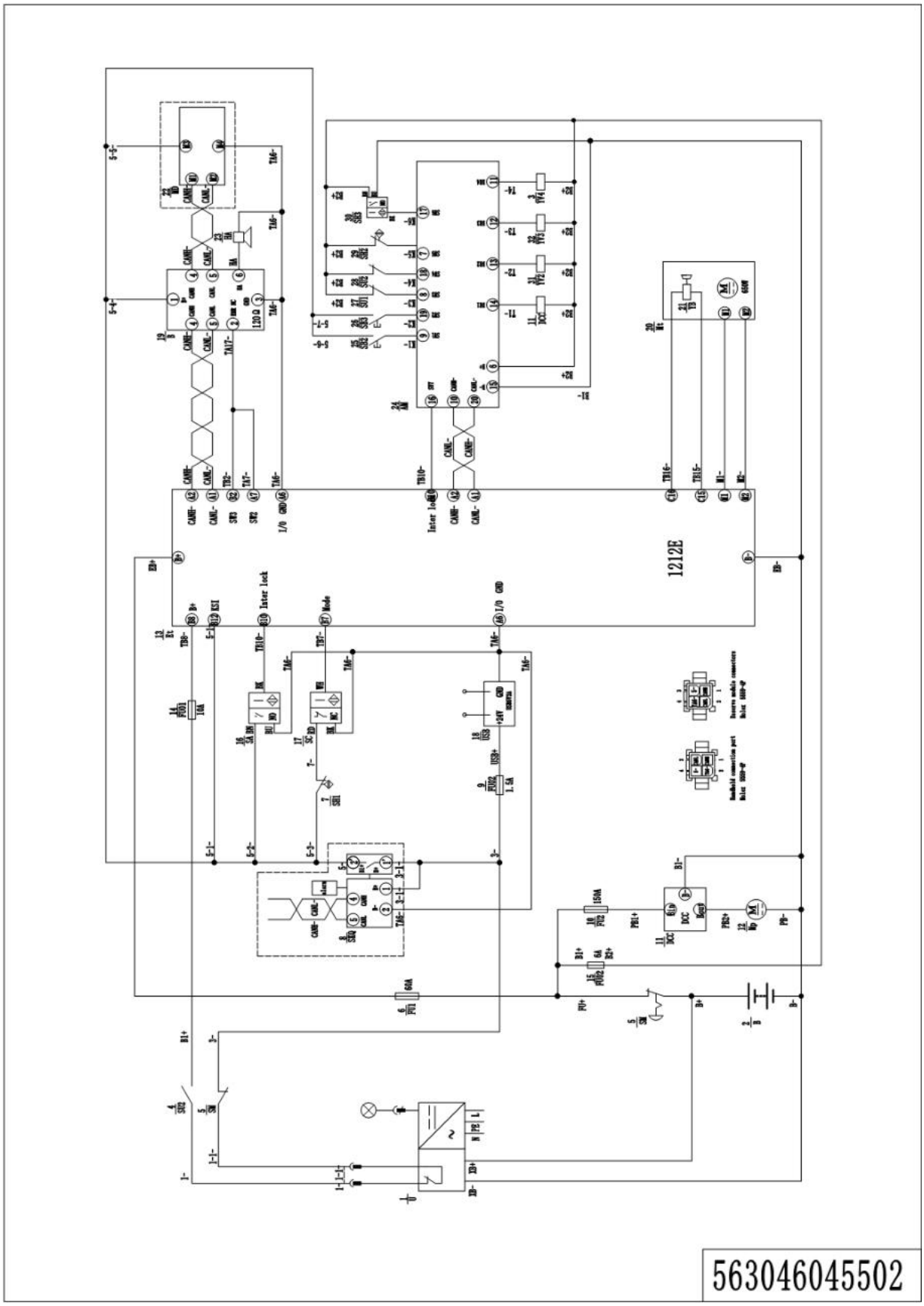

03 Hydraulic circuit diagram (562346045503)

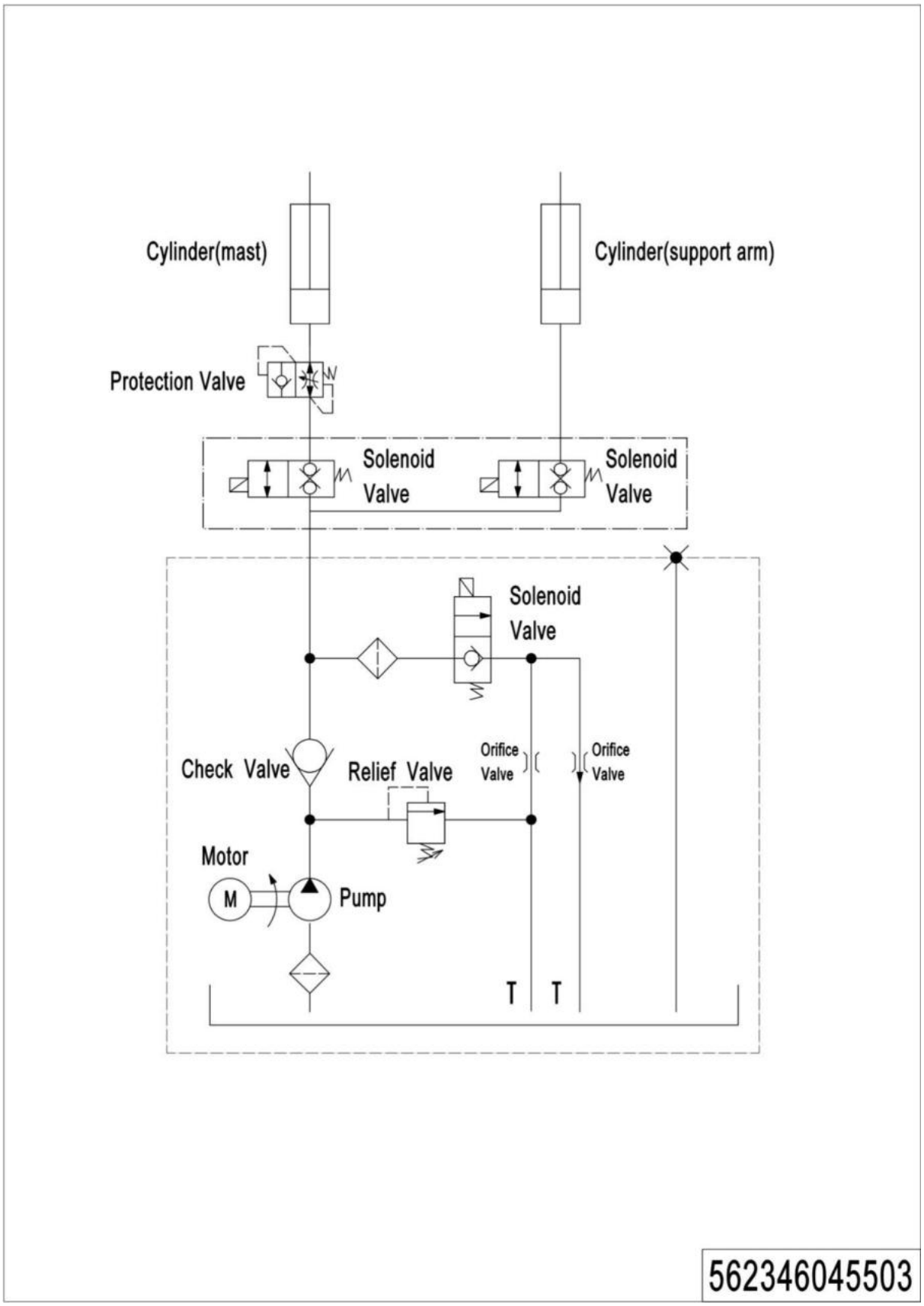

04 Easy worn parts list

No.	Item Code	Item Description	Qty.	Chapter/ Section/ Number
1	910700200019	Bearing	2	Chapter 4/05/10.02
2	562346045503	Wheel	4	Chapter 4/03/4
3	940300300030	WheelΦ100x50	1	Chapter 4/04/10.01
4	910700600001	Bearing	1	Chapter 4/04/15
5	910700700011	Bearing	1	Chapter 4/04/8
6	532298510004	Caster Kit	1	Chapter 4/04/10
7	532211020003	Gas Spring	1	Chapter 4/01/10.3
8	940500200001	Bushing	2	Chapter 4/01/6
9	540298510002	Seal Kit	1	Chapter 5/01/28.01
10	910700200020	Bearing	2	Chapter 5/01/43
11	920100100003	Fuse	1	Chapter 6/02/9
12	920100100007	Fuse	1	Chapter 6/02/7
13	920100200002	Fuse	1	Chapter 6/02/2