Electric Pallet Stacker SWB-130S

High lift

PARTS MANUAL

540346020101

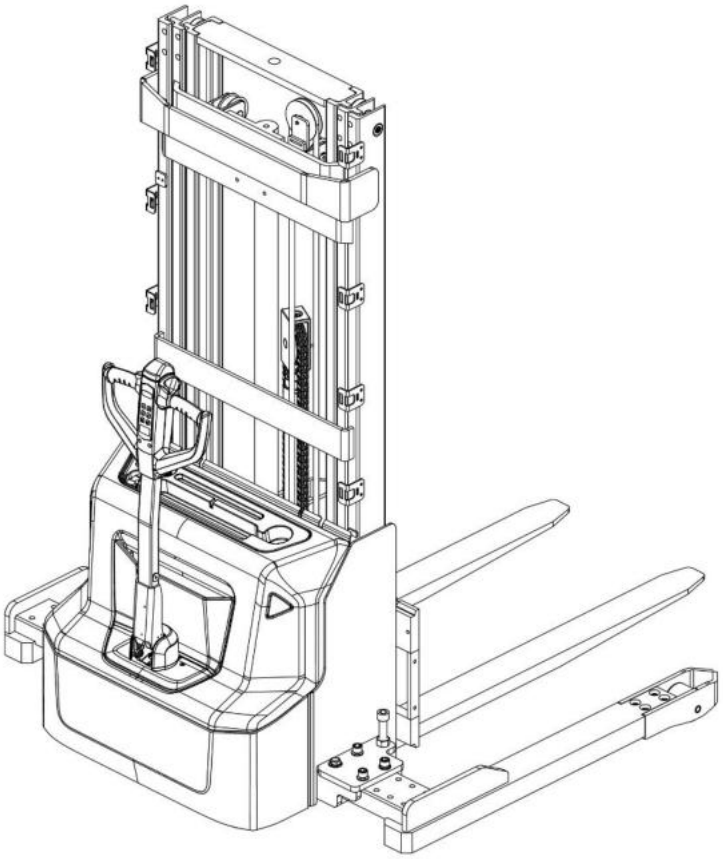

Version: V01

Truck Identification Number From:

Parts Manual SWB-130S-PM01CN

Please order parts from authorized dealers of Noblelift Intelligent Equipment Co., LTD. In order to avoid wrong delivery, all the orders for spare parts should specify the following items:

- Truck model, identification number and manufacture year.
- Orders for spare parts of mast, hydraulic transmission unit, steering axle, motor, etc. shall indicate the manufacture number of these parts.
- Codes for Noblelift spare parts are shown in the table of parts manual. Please also pay attention to the description of supply status, order quantity, etc. (check the number listed in "Mark" column of the parts manual).

"Mark" Column:

The unmarked indicates the parts are in short supply cycle.

Number 1: supply as package. Indicating these that parts are small parts and seal parts, which are supplied in package unit and in short supply cycle.

Number 2: supply with constraints. Indicating that these spare parts are not in stock and will be prepared for production after receiving the order from customers, which are in long supply cycle.

Number 3: phasing-out supply. Indicating that these parts will be replaced by new parts due to technical improvements and the current stock will not be available when these parts run out. Please check the description of technical improvements notice.

Number 4: supply as assembly. Indicating that these parts are assembly parts defined by manufacture process, which cannot be supplied as a single part.

Number 5: check other tables.

This parts manual is the property of Noblelift and can be shared under the confidential agreement only, Noblelift has the right to claim for compensation of any unauthorized use. Copy without permission is not allowed. Figures in the manual are not limited by the original design. Noblelift Intelligent Equipment Co., LTD reserves the right to improve the products for continuous technology progress.

TABLE OF CONTENTS

Chapter 1: Drive system 5

01 Drive unit (540346013501).....5

02 Drive assembly (YX) (540346013001).....7

Chapter 2: Hydraulic system.....9

01 Hydraulic unit (540346024002).....9

02 Pump unit (540346023501) 11

Chapter 3: Truck structure 13

01 Truck frame (540346021501) 13

02 Forks (540346038002).....15

04 Control panel assembly (20CE) (540246010001).....17

05 Control panel assembly (540246010002) 21

Chapter 4: Steering system, braking system and wheels 23

01 Tiller (532246011001).....23

02 Tiller head (532246011002).....25

03 Tiller head (SHIJIA) (EN1175:2020) (532246011013).....27

04 Load wheel (536746017001) 29

05 Side wheel (536746016501) 31

06 Manual steering (Chain) (536746031202).....33

Chapter 5: Mast system.....35

01 Three stage mast Free Lift (540346044501).....35

01 Three stage mast Free Lift (540346043501) continuation 37

01 Three stage mast Free Lift (540346043501) continuation 39

Chapter 6: Electrical parts and wire harness.....41

01 Wire harness (532246033001) 41

02 Wire harness (EN1175:2020) (532246033010) 43

03 Wire harness (lithium battery) (532246033002).....45

04 Wire harness (lithium battery, EN1175:2020) (532246033011) 47

05 Electrical control unit (536746033003) 49

06 Charger (lead-acid battery) (532246036501).....51

07 Charger (lithium battery) (532246036502) 53

Chapter 7: Special equipment 55

01 Load backrest (536746040501) 55

Chapter 8: Others 57

01 Labels and decals (EU) (536746047001) 57

02 Labels and decals (USA) (536746047002) 59

Appendix 61

01 Electrical circuit diagram (lead-acid battery) (532246045501) 61

02 Electrical circuit diagram (Lithium battery) (532246045502) 62

03 Electrical circuit diagram (lead-acid battery, EN1175:2020) (532246045510) 63

04 Electrical circuit diagram (Lithium battery, EN1175:2020) (532246045511) 64

05 Hydraulic circuit diagram (532246045503) 65

06 Easy worn parts list 66

Chapter 1: Drive system

01 Drive unit (540346013501)

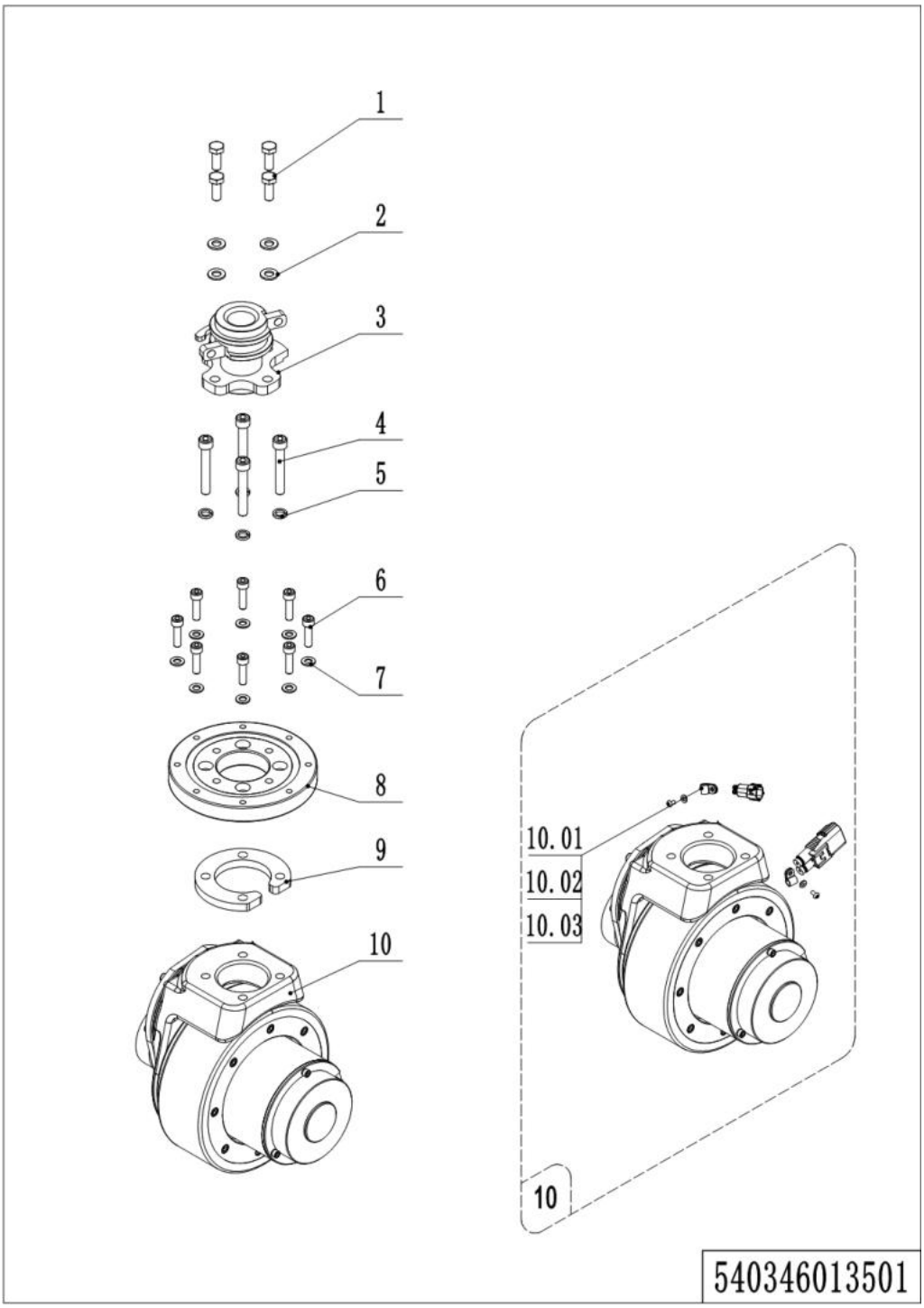

01 Drive unit (540346013501)

No.	Item Code	Mark	Item Description	Qty.	Substitute	Note
1	910100300036	1	Bolt	4		
2	910400100007	1	Flat Washer	4		
3	203831210000		Drive axle welding	1		
4	910200200082	1	Screw	4		
5	910400500007	1	Spring Washer	4		
6	910200200138	1	Screw	8		
7	910400100006	1	Flat Washer	8		
8	532213520001		Slewing Bearing	1		
9	536713520001		Linking plate	1		
10	508098510057	5	Drive Assembly (ZD)	1		PU wheel
10	508098510082	5	Drive Assembly (ZD)	1		Anti-skip wheel
10.01	910200700001	1	Screw	2		
10.02	910400100003	1	Flat Washer	2		
10.03	921300200001		Cable Clamp	2		

02 Drive assembly (YX) (540346013001)

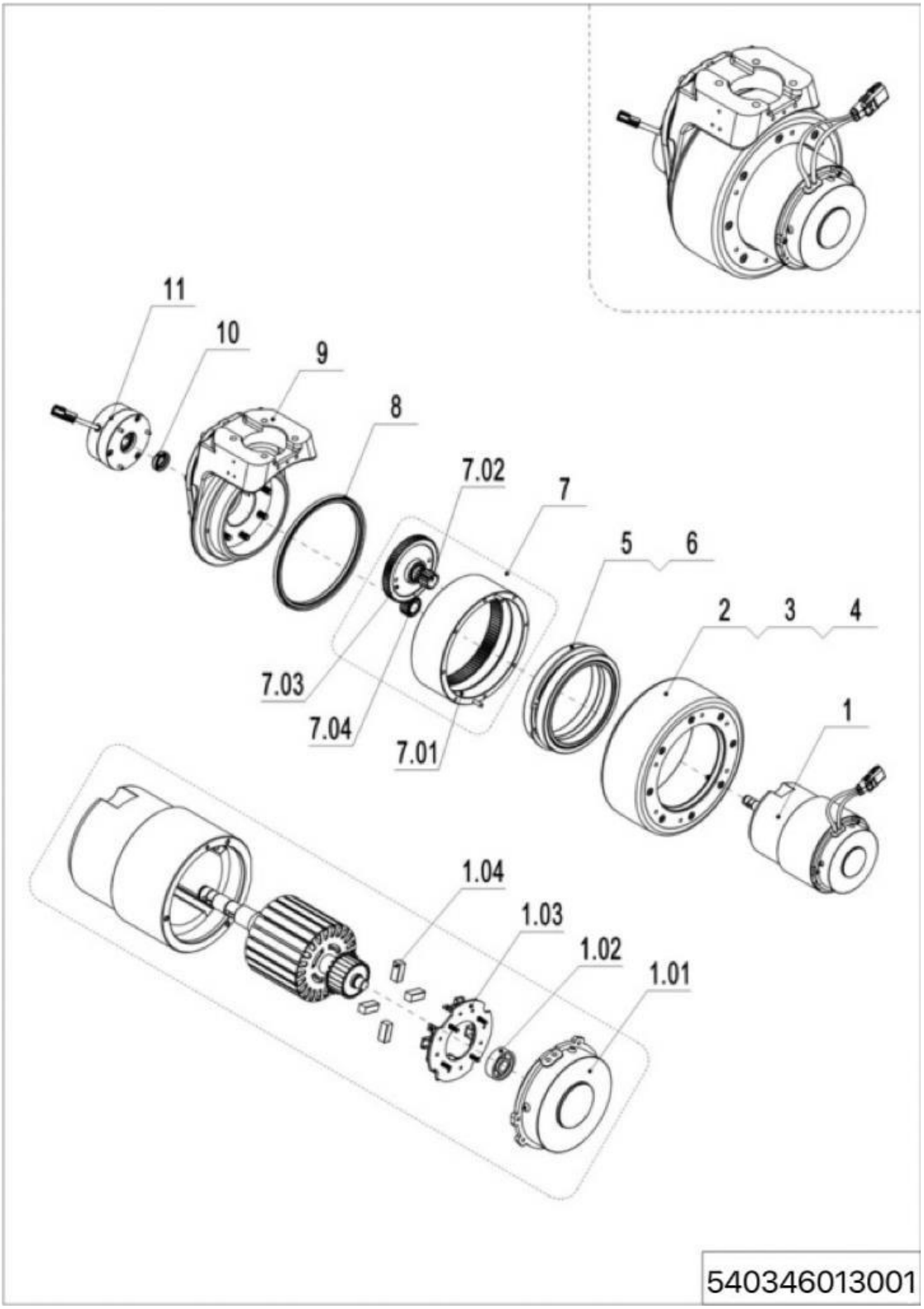

02 Drive assembly (ZD) (536746013001)

No.	Item Code	Mark	Item Description	Qty.	Substitute	Note
--	508013510002		Drive Assembly	1		YX
--	508013510005		Drive Assembly	1		YX, Anti-skip wheel
1	508098510158		Motor Kit	1		Waterproof plug
1.01	507798520022		End Cap	1		
1.02	910700200016		Bearing	1		
1.03	507798520024		Carbon Brush Holder	1		
1.04	507798520023		Carbon Brush	4		
2	961004000009		Drive Wheel	1		
2	961004200001		Drive Wheel	1		Anti-skip wheel
3	961004000011		Oil Seal	1		
4	910200200167		Screw Kits M6x20	8		
5	910700200044		Bearing	2		
6	961004000007		Spacer Bush	1		
7	507798510006		Gear Kit	1		
7.01	961004000006		Gear	1		
7.02	961004000003		Gear Shaft	1		
7.03	961004000002		Gear	1		
7.04	961004000005		Gear	1		
8	961004000010		Oil Seal	1		
9	507798510007		Gearbox Shell	1		
10	961000700012		Oil Seal	1		
11	940700100015		Electromagnetic Brake	1		STEKI

Chapter 2: Hydraulic system

01 Hydraulic unit (540346024002)

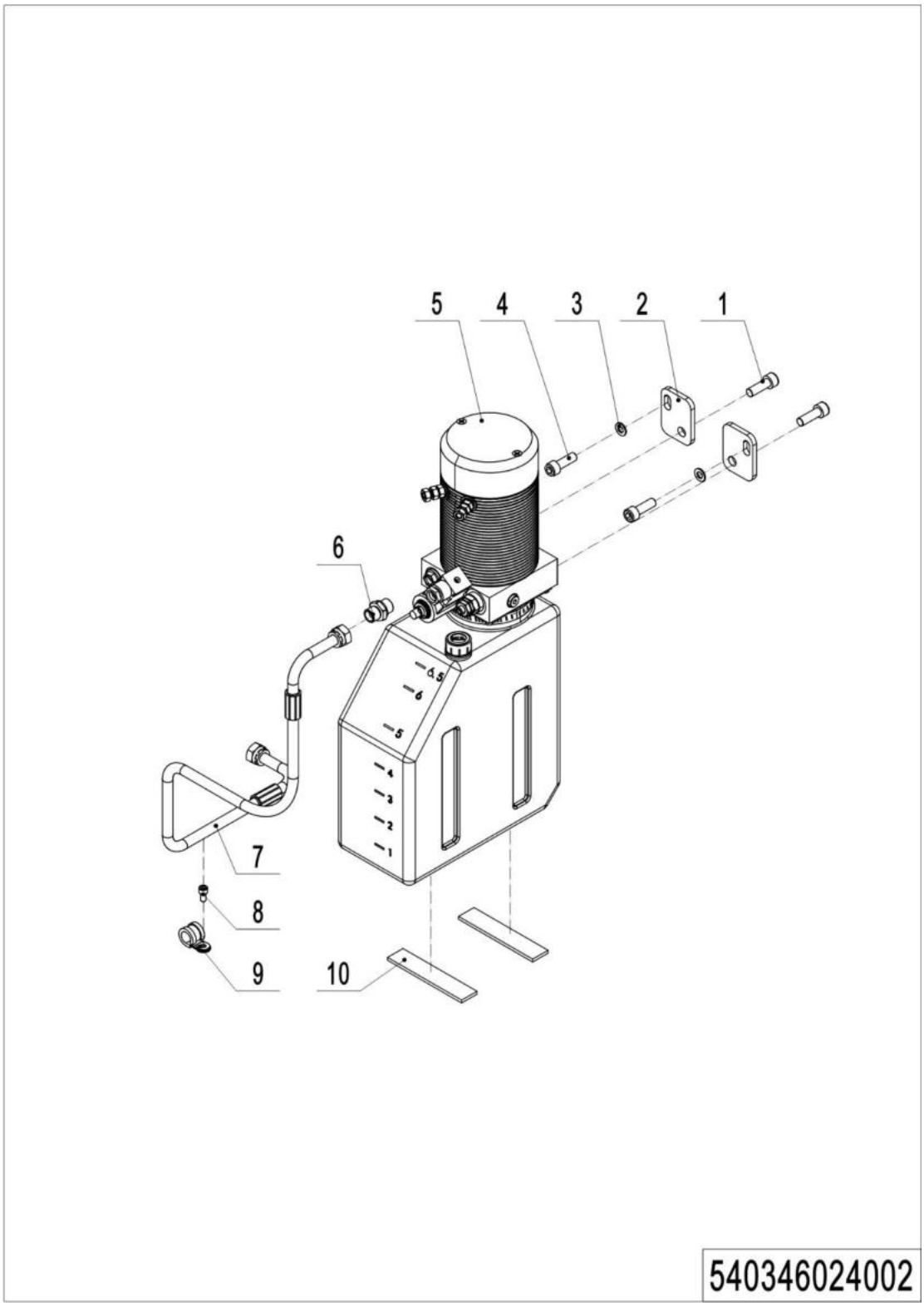

01 Hydraulic unit (540346024002)

No.	Item Code	Mark	Item Description	Qty.	Substitute	Note
1	910200200074	1	Screw	2		
2	532223520001		Plate	2		
3	910400100006	1	Flat Washer	2		
4	910200200053	1	Screw	2		
5	950900100159	5	Pump Unit	1		Check 540346023501
6	950400300007		Joint	1		
7	540224020001		Hose	1		
8	910200200033	1	Screw M6x12	1		
9	951000100003		Hose Clamp	2		
10	532223520010		Crash Pad	2		

02 Pump unit (540346023501)

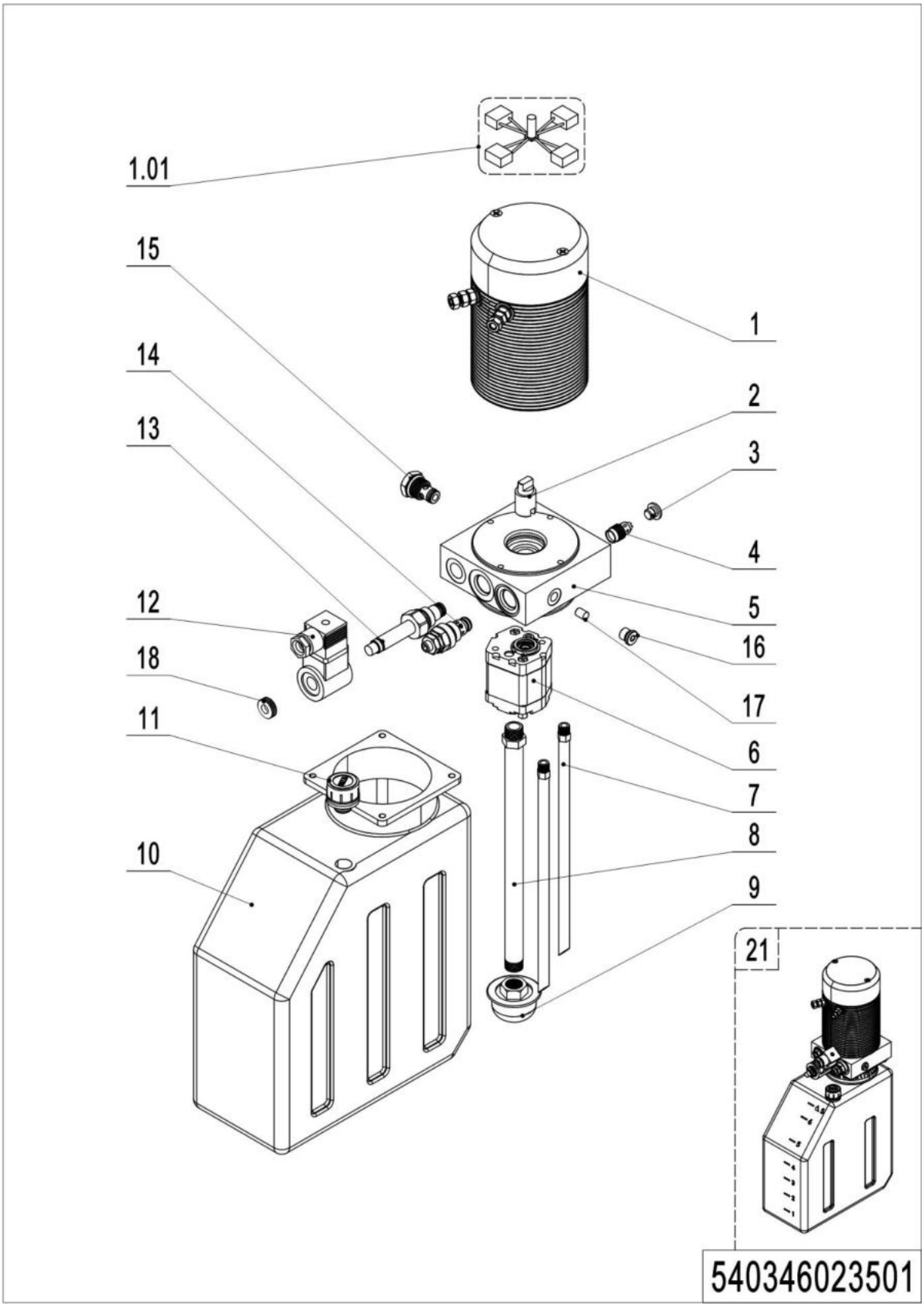

02 Pump unit (540346023501)

No.	Item Code	Mark	Item Description	Qty.	Substitute	Note
--	950900100108		Pump Unit	1		
1	532298510056		Motor	1		
1.01	532298510058		Carbon Brush	1		
2	532298520007		Coupling	1		
3	532298520003		End Cap	1		
4	532298510059		Valve	1		
5	53229810060		Valve Block	1		
6	532298510057		Gear pump	1		
7	532298520004		Pipe	2		
8	536798520002		Oil suction pipe	1		
9	532298510031		Filter	1		
10	536798520003		Oil tank	1		
11	532298510030		Vent plug	1		
12	532298510034		Coil	1		
13	532298510033		Magnetic Valve	1		
14	532298510044		Overflow valve	1		
15	532298510028		Check Valve	1		
16	532298510061		End Cap	1		
17	532298520010		Throttle screw	1		
18	532298520011		Nut	1		

Chapter 3: Truck structure

01 Truck frame (540346021501)

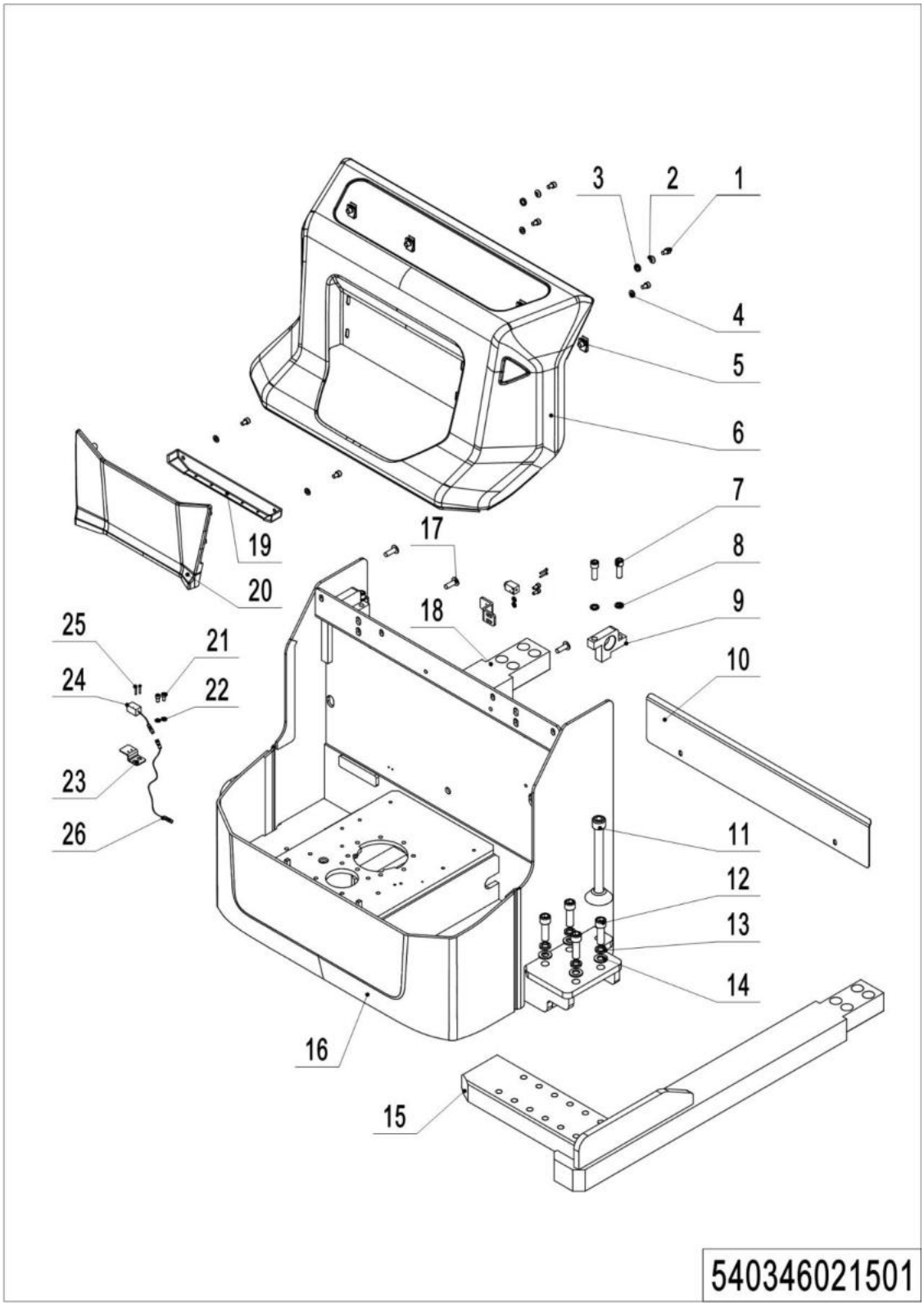

01 Truck frame (540346021501)

No.	Item Code	Mark	Item Description	Qty.	Substitute	Note
1	910200200053	1	Screw	8		
2	910400600004	1	Spherical Washer	2		
3	910400700004	1	Taper faced washer GB850-8	2		
4	910400100006	1	Flat Washer	6		
5	940400400003		Cage Nut	4		
6	532221510003		Cover	1		
7	910200200099	1	Screw	4		
8	910400500008	1	Spring Washer	4		
9	532221520020		Mounting Plate	2		
10	536721520001		Baffle	1		
11	536721510004		Support Leg Kit	2		
12	910200200114		Screw	8		
13	910400500010		Spring Washer	8		
14	910400100010		Flat Washer	8		
15	536721510003	2	Leg	1		
16	536721510001	2	Chassis welding	1		
17	941100100004	1	Screw	4		
18	536721510002	2	Leg	1		
19	532221520025		Cover	1		
20	532221520024		Panel	1		
21	910200200033	1	Screw	2		
22	910400100005	1	Flat Washer	2		
23	532221520023		Mounting Plate	1		
24	920200400029		Proximity Switch	1		
25	910200500015	1	Screw	2		
26	921500100077		Cable	1		

02 Forks (540346038002)

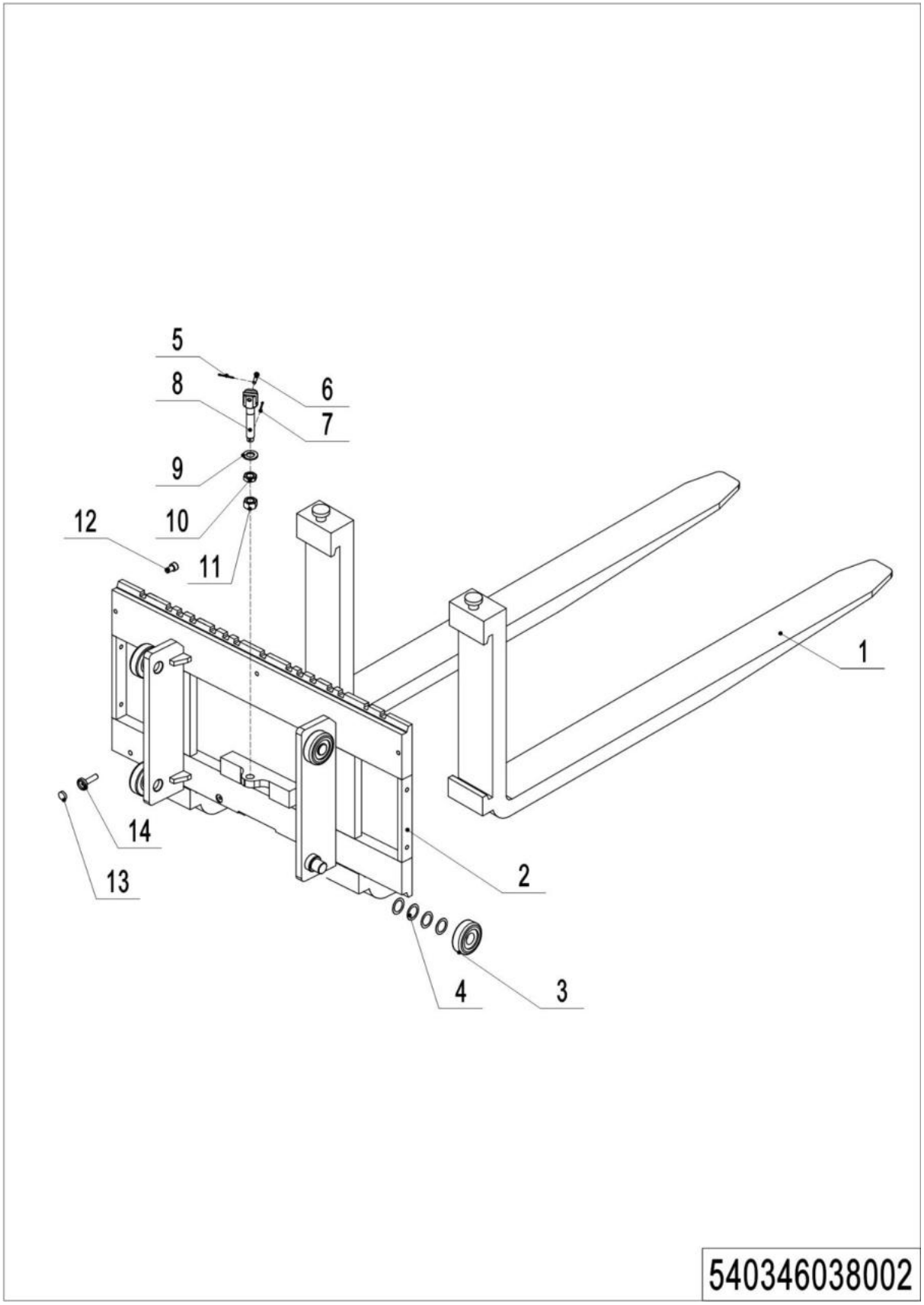

1=Supply as package; 2=Supply with limit; 3=Phasing out supply; 4=Supply as assembly; 5=Check other lists.

02 Forks (540346038002)

No.	Item Code	Mark	Item Description	Qty.	Substitute	Note
1	940100100045		Fork100x40x1150	2		
2	540338010002		Fork	1		
3	940200100038		Main Roller	4		
4	940600500016		Washer	24		
5	910600600015		Cotter Pin	1		
6	910600700028		Pin	1		
7	910600600036		Cotter Pin	1		
8	533243520008		Bolt	1		
9	910400100010		Washer	1		
10	910300400006		Nut	1		
11	910300200008		Nut	1		
12	910200200074		Screw	1		
13	940600100001		Magnet	1		
14	940600200002		Magnetic steel base	1		

03 Battery Holder (Lithium) (540346012501)

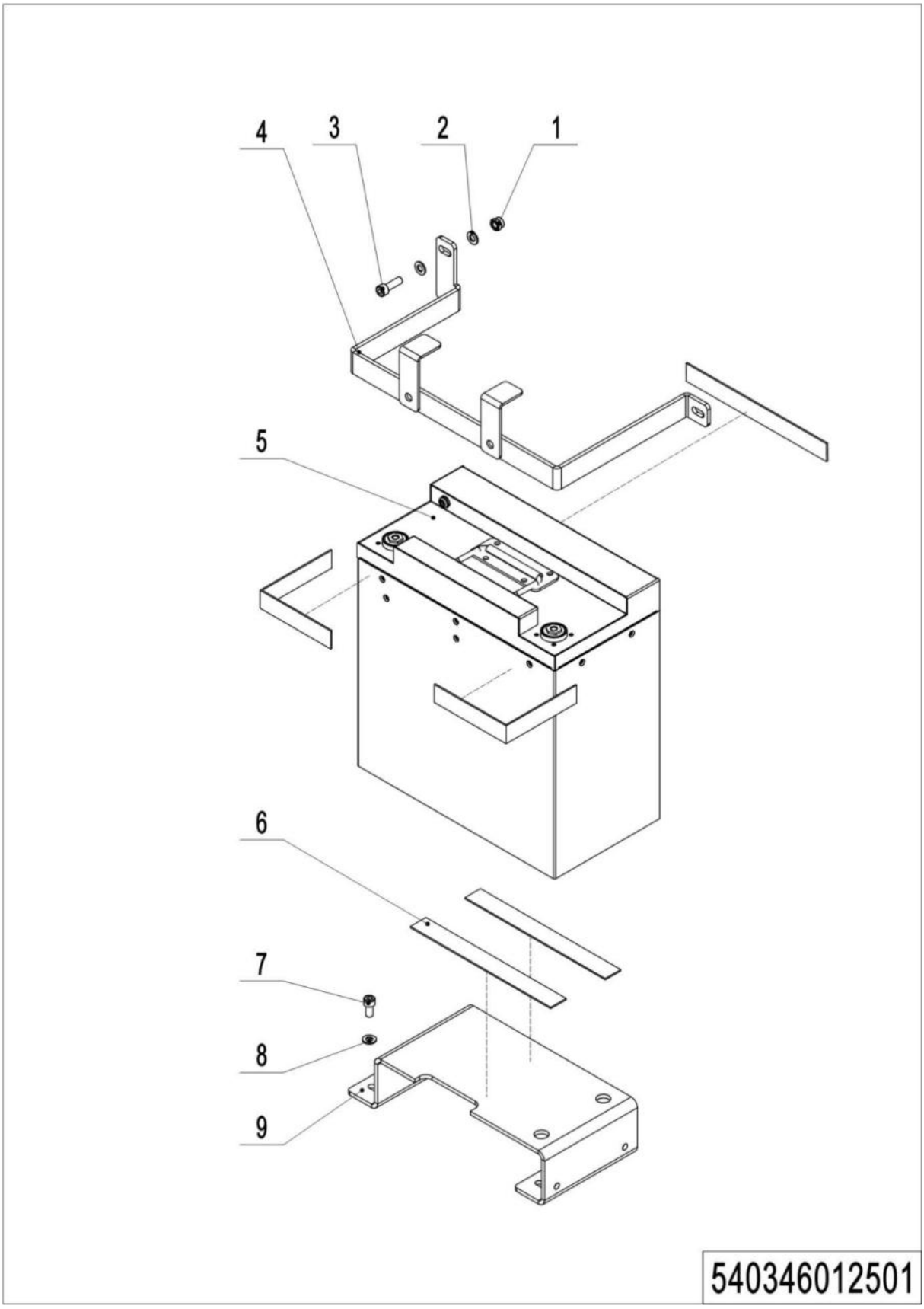

1=Supply as package; 2=Supply with limit; 3=Phasing out supply; 4=Supply as assembly; 5=Check other lists.

03 Battery Holder (Lithium) (540346012501)

No.	Item Code	Mark	Item Description	Qty.	Substitute	Note
1	910300500004	1	Nut	2		
2	910400100006	1	Washer	8		
3	910200200058	1	Screw	2		
4	540312510001		Mounting Plate	1		
5	920600100445		Lithium Battery 24V100Ah	1		FDE
6	532233020005		Crash Pad	5		
7	910200200053	1	Screw	4		
8	910400100006	1	Washer	4		
9	540312520003		Holder	1		

04 Control panel assembly (20CE) (540246010001)

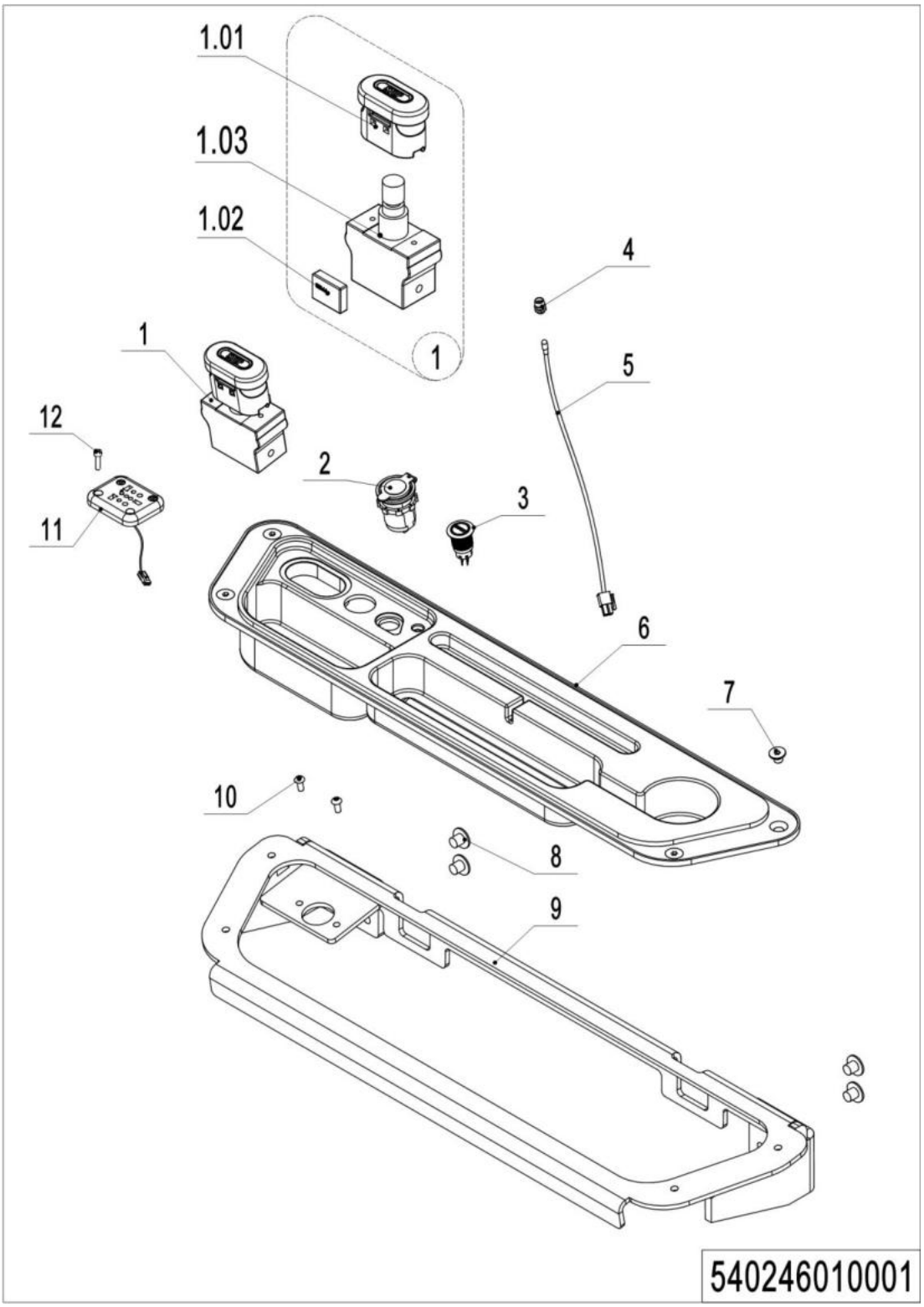

1=Supply as package; 2=Supply with limit; 3=Phasing out supply; 4=Supply as assembly; 5=Check other lists.

04 Control panel assembly (20CE) (540246010001)

No.	Item Code	Mark	Item Description	Qty.	Substitute	Note
1	920200100032		Emergency Button	1		
1.01	920200100039		Emergency Button	1		
1.02	920200100040		Microswitch	1		
1.03	920200100041		Emergency Button Holder	1		
2	921000200859		USB interface	1		
3	532233010023		Button	1		
4	922000100024		Lamp Holder	1		
5	532298510006		Indicator Light	1		
6	532210020009		Bezel	1		
7	910200400023	1	Screw	4		
8	941100100005		Screw	4		
9	532210010001		Mounting Plate	1		
10	910200300012	1	Screw	2		
11	920400300041		Socket	1		EU
11	920400300042		Socket	1		6
12	910200200015	1	Screw	3		

05 Control panel assembly (540246010002)

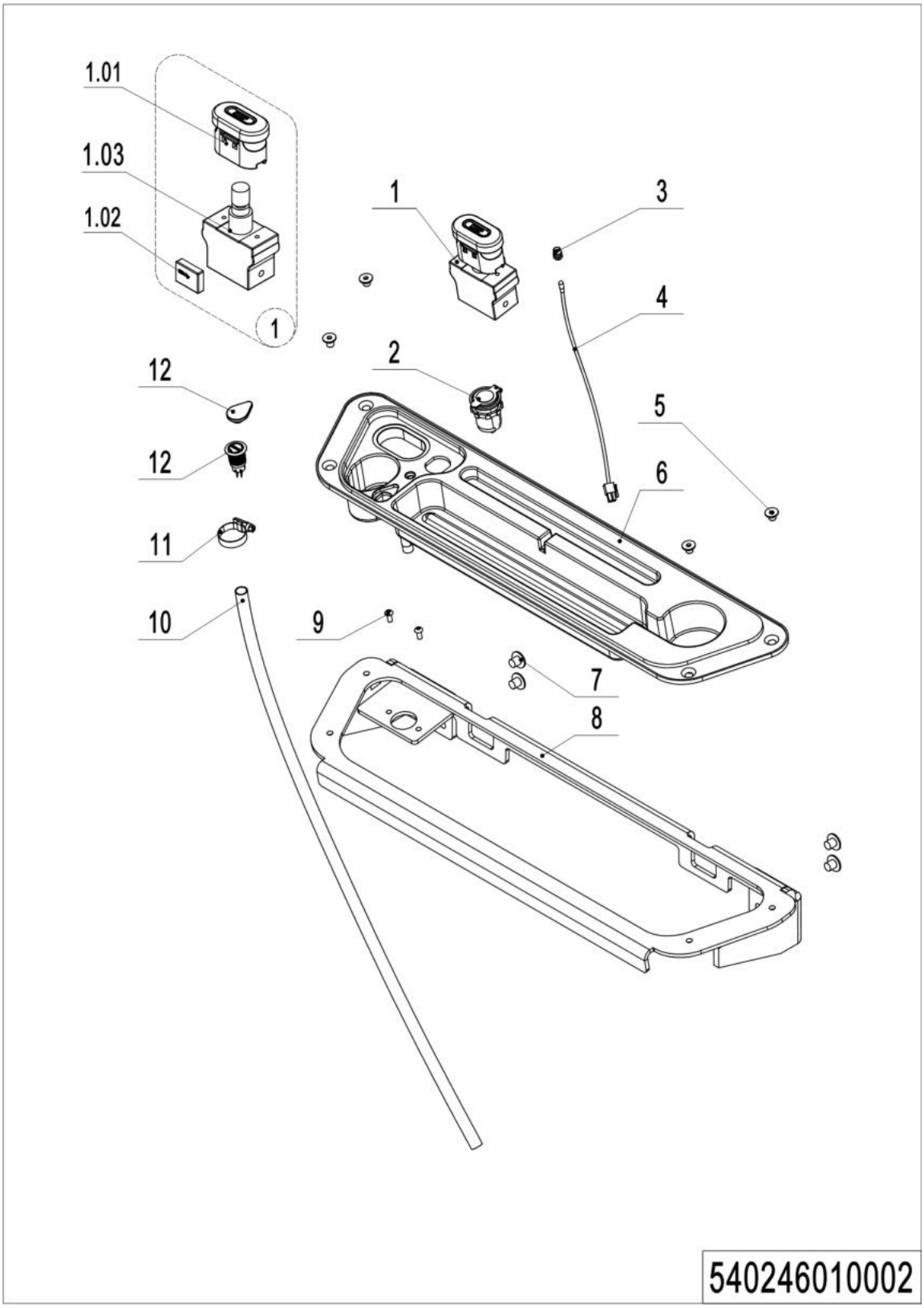

05 Control panel assembly (540246010002)

No.	Item Code	Mark	Item Description	Qty.	Substitute	Note
1	920200100032		Emergency Button	1		
1.01	920200100039		Emergency Button	1		
1.02	920200100040		Microswitch	1		
1.03	920200100041		Emergency Button Holder	1		
2	921000200859		USB interface	1		
3	922000100024		Lamp Holder	1		
4	532298510006		Indicator Light	1		
5	910200400023	1	Screw	4		
6	532210020001		Bezel	1		
7	941100100005		Screw	4		
8	532210010001		Mounting Plate	1		
9	910200300012	1	Screw	2		
10	532210020008		Pipe	1		
11	911000600008		Hose Clamp	1		
12	532233010023		Button	1		

Chapter 4: Steering system, braking system and wheels

01 Tiller (532246011001)

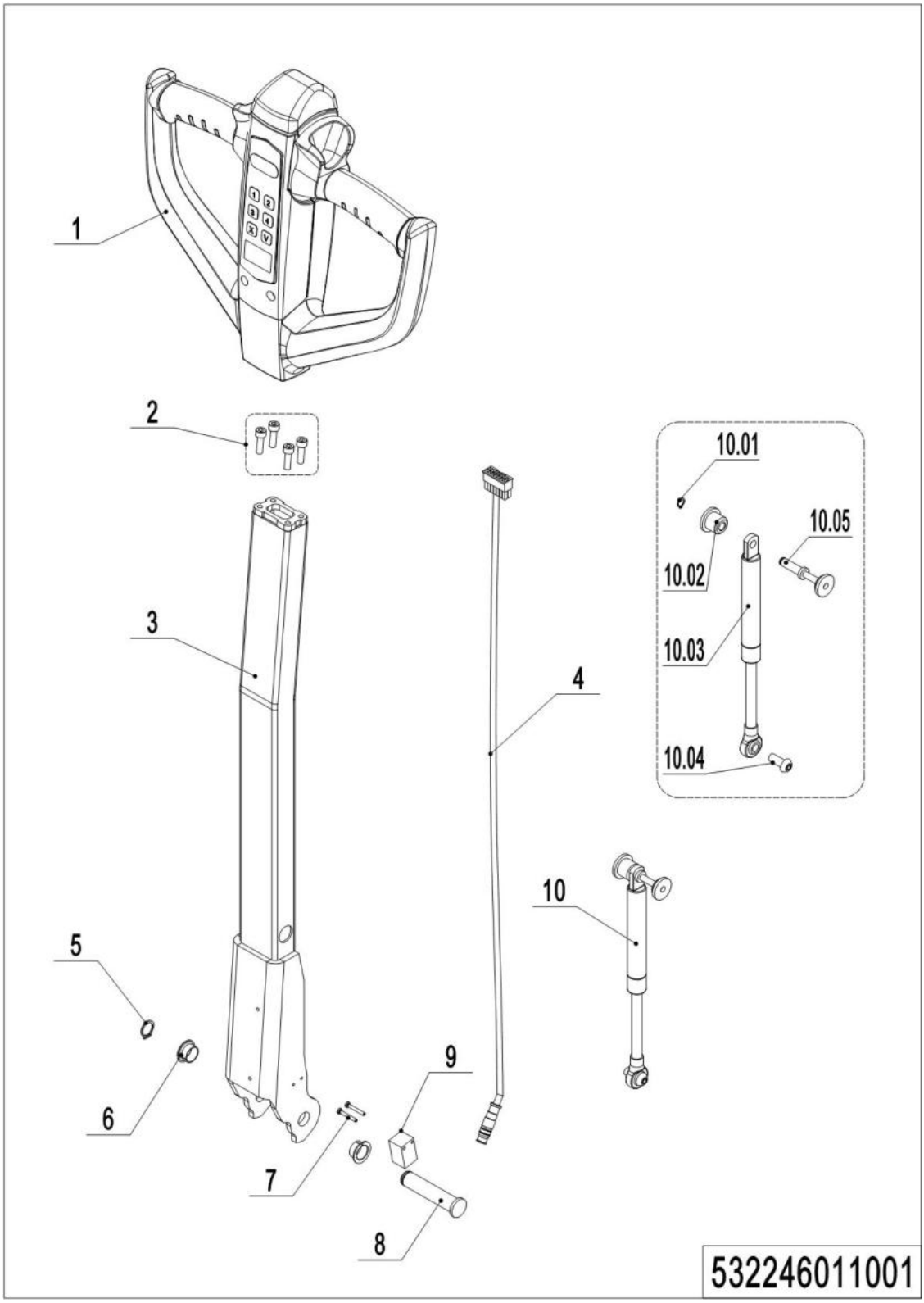

01 Tiller (532246011001）

No.	Item Code	Mark	Item Description	Qty.	Substitute	Note
1	922100100021		Tiller	1		
1	922100100028		Tiller	1		IC card
1	922100100116		Tiller	1		EN1175:2020
1	922100100117		Tiller	1		IC card, EN1175:2020
2	910200200036	1	Screw	4		
3	532211010000		Tiller	1		
4	532233010019		Wire Harness	1		
4	532233010041		Wire Harness	1		
5	910401300006		Circlip	1		
6	940500200001		Bushing	2		
7	941101100001	1	Screw	2		
8	508011020004		Pin	1		
9	505633510001		Proximity Switch	1		
10	532298510039		Air spring kits	1		
10.1	910401300001		Circlip	1		
10.2	508011020005		Fixing Base	1		
10.3	532211020003		Gas Spring	1		
10.4	941100100011	1	Screw	1		
10.5	508011010002		Pin	1		

02 Tiller head (532246011002)

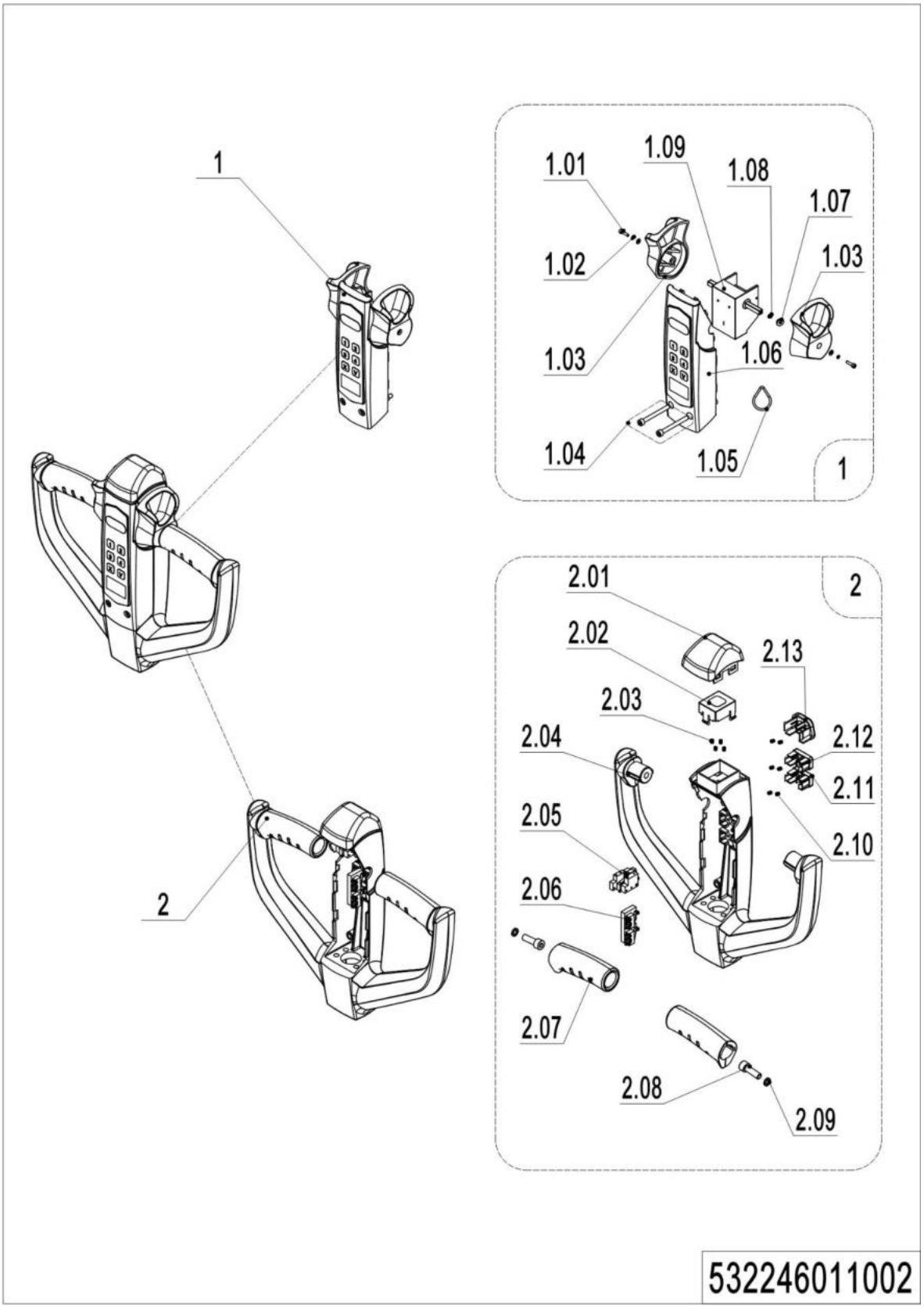

02 Tiller head (532246011002）

No.	Item Code	Mark	Item Description	Qty.	Substitute	Note
1	532298510022		Handle Cap Kit	1		
1	532298510023		Handle Cap Kit	1		IC card
1.01	910200200003	1	Screw	2		
1.02	910400500002	1	Spring Washer	2		
1.03	508098520044		Traction lever	1		Left and Right
1.04	910200200159	1	Screw	2		
1.05	508098520027		ID Card	1		With RFID card function
1.06	532298510054		Display Screen kit	1		
1.06	532298510055		Display Screen kit	1		IC card
1.07	508098520015		Bushing	2		
1.08	508098520016		Bushing	2		
1.09	532298510005		Accelerator	1		
1.09	532298510007		Accelerator	1		IC card
2	508098510031		Handle Cap Kit	1		
2.01	508098520018		Cap,Break Switch	1		
2.02	508098520019		Bracket	1		
2.03	502311020018		Spring	4		
2.04	508098520012		Handle Cap	1		
2.05	508098510029		Microswitch Kits	1		
2.06	508098510030		Microswitch Kits	1		
2.07	508098520013		Handle	2		
2.08	910200200058	1	Screw	2		
2.09	910400500006	1	Spring Washer	2		
2.10	502311020022		Spring	6		
2.11	508098520031		Button	1		
2.12	508098520030		Button	1		
2.13	508098520029		Horn Button	1		

03 Tiller head (SHIJIA) (EN1175:2020) (532246011013)

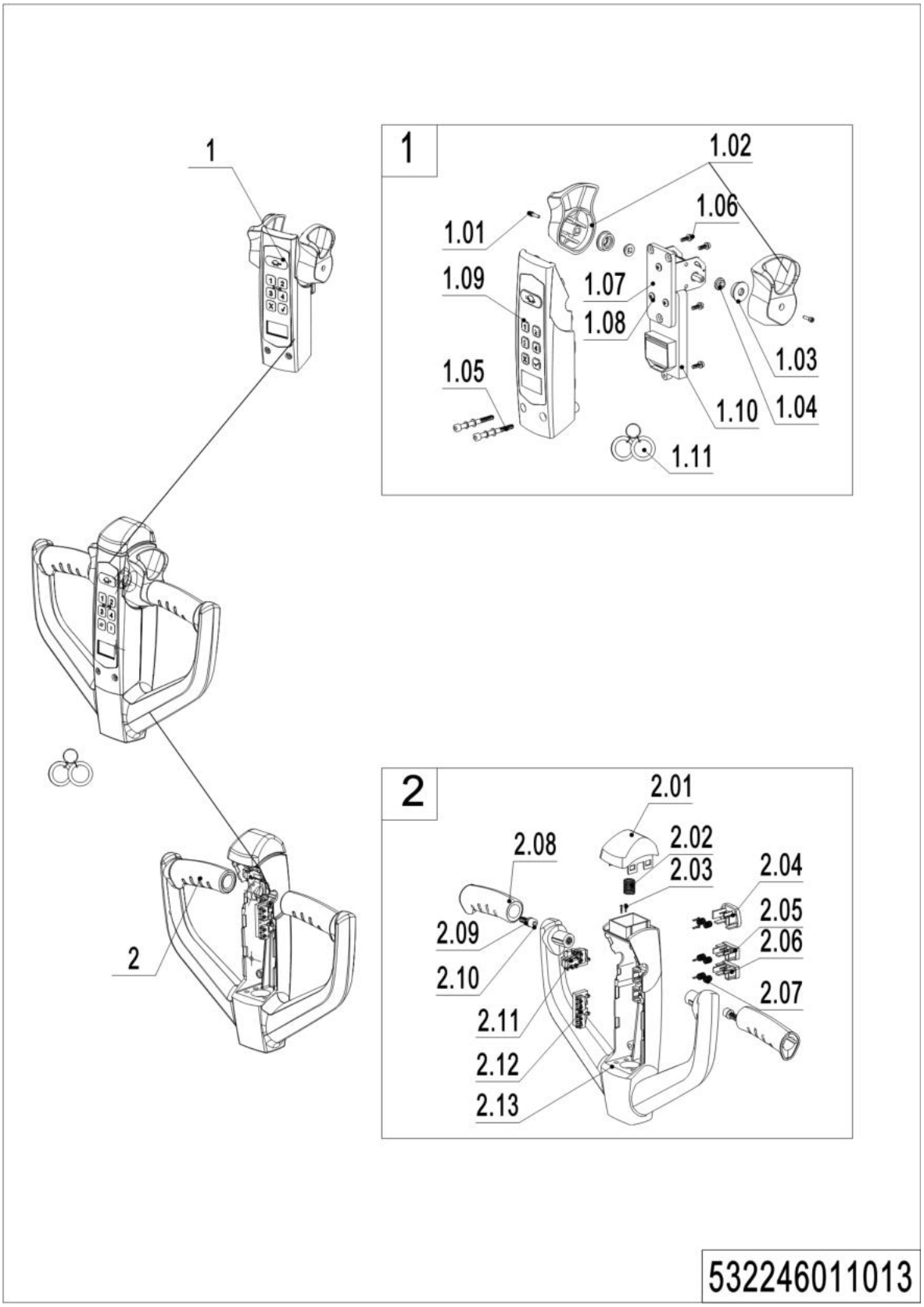

03 Tiller head (SHIJIA) (EN1175:2020) (532246011013）

No.	Item Code	Mark	Item Description	Qty.	Substitute	Note
1	532298510090		Handle Cap Kit	1		
1	532298510091		Handle Cap Kit	1		IC card
1.01	508098520086		Screw	1		
1.02	508098520044		Traction lever	1		
1.03	508098520015		Bushing	1		
1.04	508098520016		Bushing	2		
1.05	910200200159		Screw	4		
1.06	910200200013		Screw	1		
1.07	508098520084		Fixed plate	3		
1.08	910200500020		Screw	1		
1.09	532298510086		Handle Cap Kit	1		
1.09	532298510087		Handle Cap Kit	1		IC card
1.10	532298510092		Accelerator	1		
1.10	532298510093		Accelerator	1		IC card
1.11	508098520027		ID card	1		IC card
2	532298510096		Handle Cap Kit	1		
2.01	508098520018		Bracket	1		
2.02	502311020018		Spring	4		
2.03	532298510076		Screw	6		
2.04	508098520083		Horn Button	1		
2.05	508098520030		Button	1		
2.06	508098520031		Button	1		
2.07	502311020022		Spring	6		
2.08	508098520013		Handle	2		
2.09	910400500006		Spring Washer	2		
2.10	508598520100		Screw	2		
2.11	532298510074		Microswitch Kits	1		
2.12	532298510075		Microswitch Kits	1		
2.13	532298510097		Handle Cap	1		

04 Load wheel (536746017001)

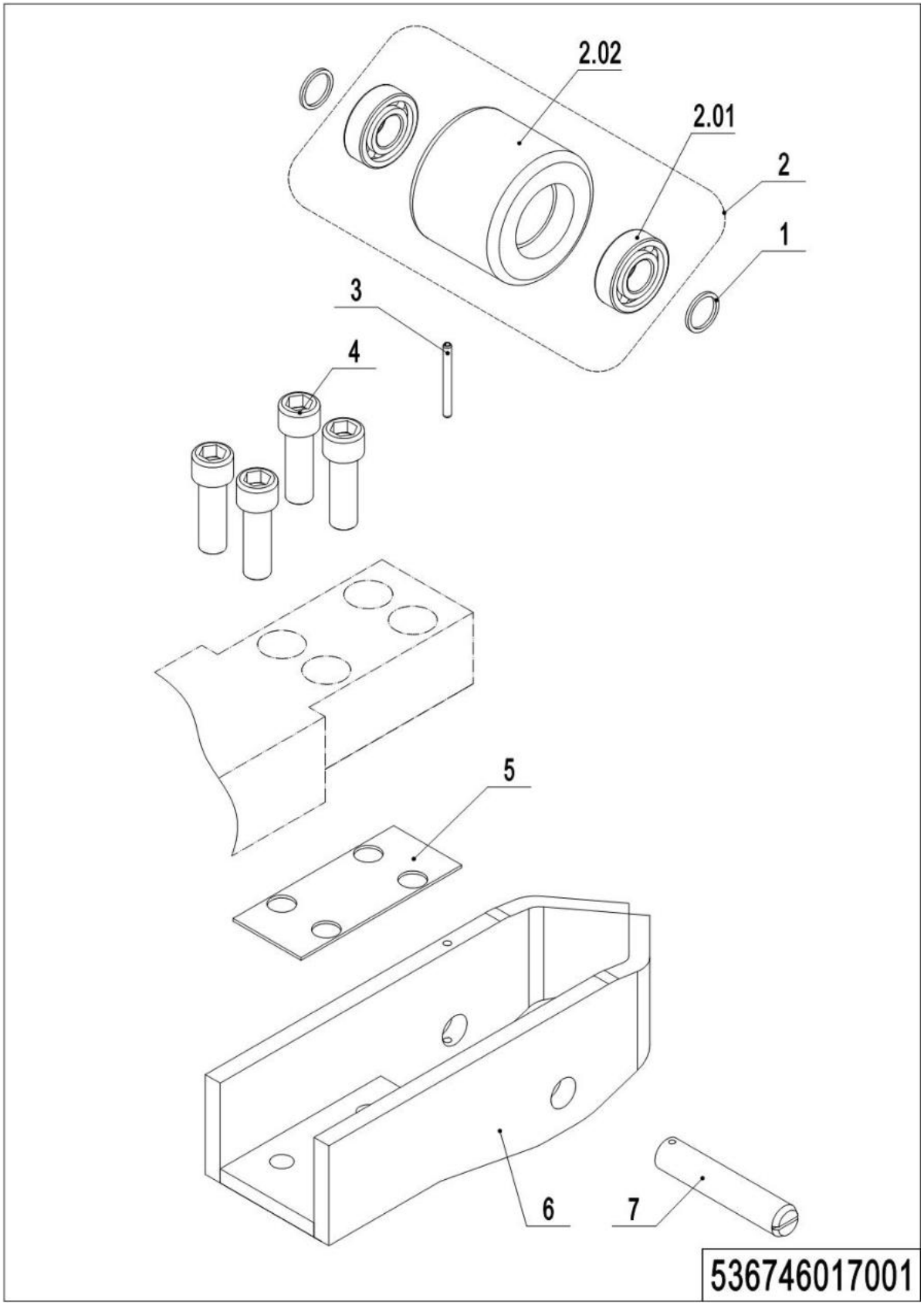

04 Load wheel (536746017001)

No.	Item Code	Mark	Item Description	Qty.	Substitute	Note
1	940600500053		Washer	4		
2	532998510000		Wheel	2		
2.01	910700200019		Bearing	4		
2.02	940300300009		WheelΦ84x70	2		
3	910600400030	1	Spring Pin	2		
4	910200200123	1	Screw	8		
5	536717020001		Pad	2		
6	536717010001		Wheel Carrier	2		
7	536717020002		Axle	2		

05 Side wheel (536746016501)

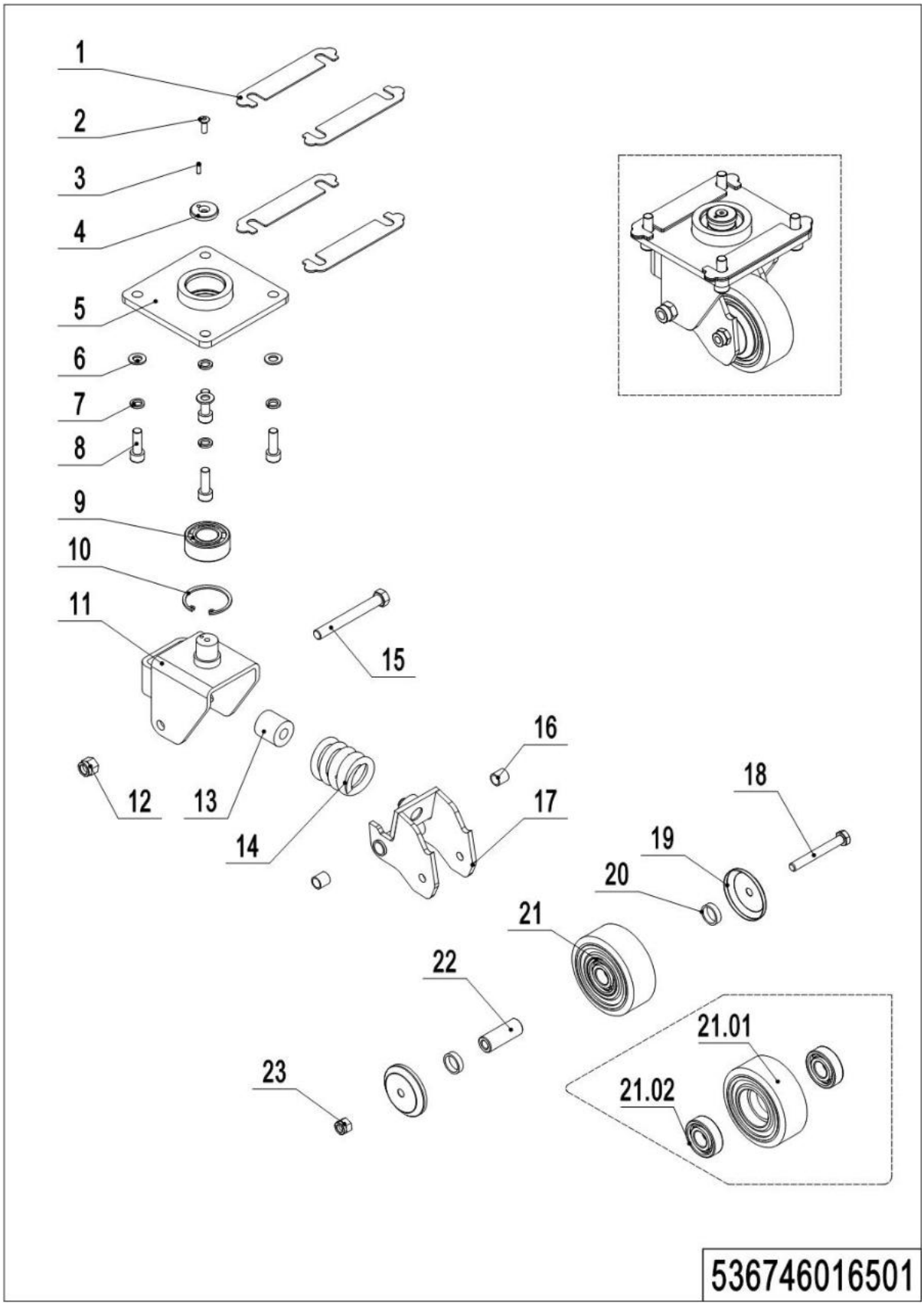

05 Side wheel (536746016501)

No.	Item Code	Mark	Item Description	Qty.	Substitute	Note
--	536716510000		Caster Assembly	2		
1	536716520001		Adjustment Pad	8		
2	941100300001	1	Screw	2		
3	910600100004	1	Cylindrical Pin	2		
4	505616520007		Retaining Ring	2		
5	536716510002		Plate	2		
6	910400100007	1	Flat Washer	8		
7	910400500007	1	Spring Washer	8		
8	910200200077	1	Screw	8		
9	910700500002		Bearing	2		
10	910401400016		Circlip	2		
11	536716510003		Wheel Carrier	2		
12	910300500006	1	Nut	2		
13	505616520000		Spring	2		
14	940400500006		Spring	2		
15	941100200002	1	Bolt	2		
16	940500100002		Bushing	4		
17	536716510001		Whirling Arm	2		
18	910100100038	1	Bolt	2		
19	505616520011		Dust Cap	4		
20	505616520012		Check Ring	4		
21	503598510003		Caster Assembly	2		
21.01	940300300018		Wheel Φ100x40	2		
21.02	910700200019		Bearing	4		
22	505616520013		Bushing	2		
23	910300500005	1	Nut	2		

06 Manual steering (Chain) (536746031202)

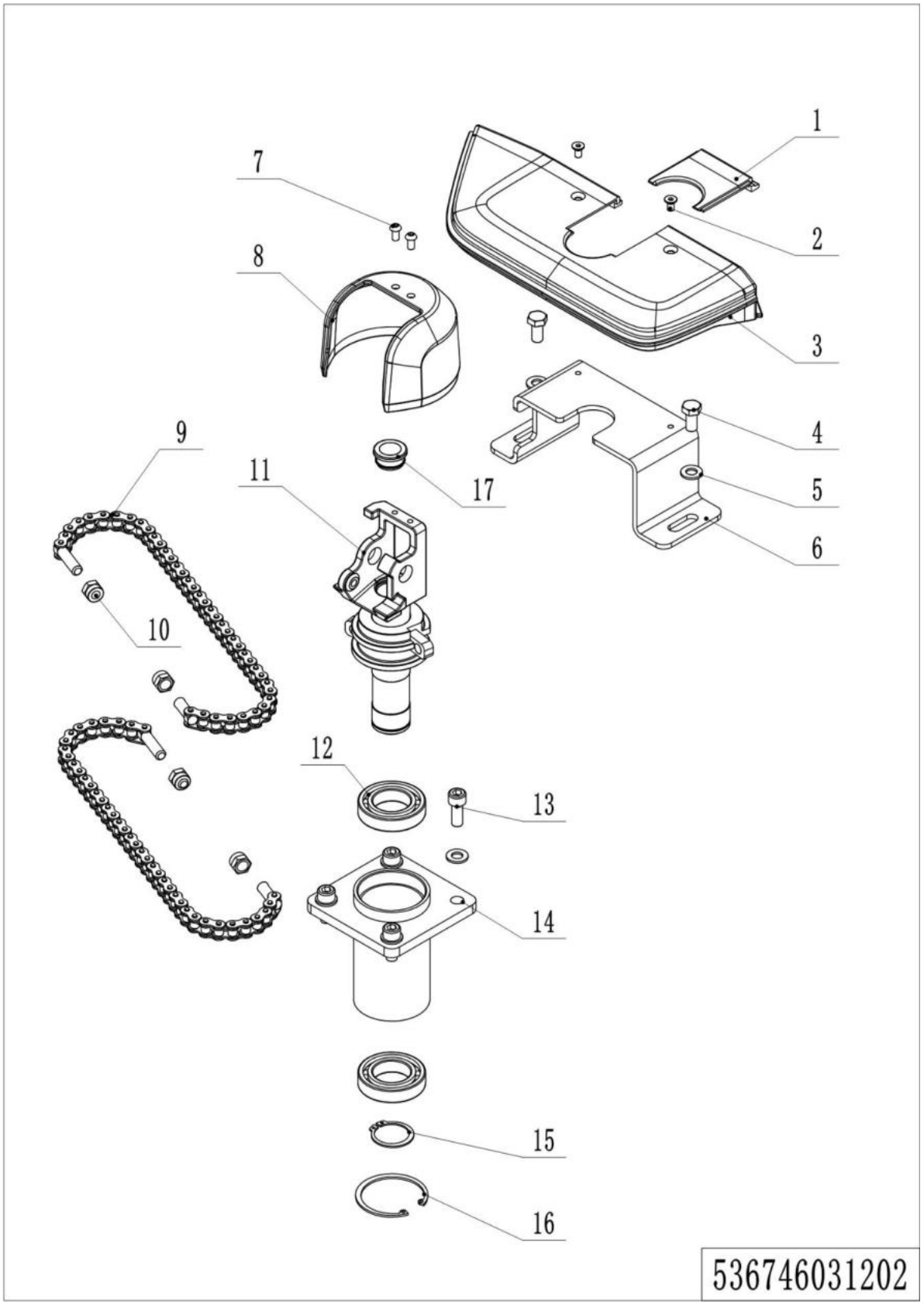

06 Manual steering (Chain) (536746031202)

No.	Item Code	Mark	Item Description	Qty.	Substitute	Note
1	532231220011		Handle Cap	1		
2	910200400016	1	Screw	2		
3	532231220010		Handle Cap	1		
4	910100300035	1	Bolt	2		
5	910400100007	1	Flat Washer	6		
6	532231220008		Pedestal	1		
7	910200300017	1	Screw	2		
8	532211020001		Protective Cover	1		
9	536731210008		Wirerope	2		
10	910300500005		Nut	4		
11	536731210006		handle Spindle	1		
12	910700200007		Bearing	2		
13	910200200076	1	Screw	4		
14	536731210003		Bracket	1		
15	910401300018	1	Circlip	1		
16	910401400018	1	Circlip	1		

Chapter 5: Mast system

01 Three stage mast Free Lift (540346044501)

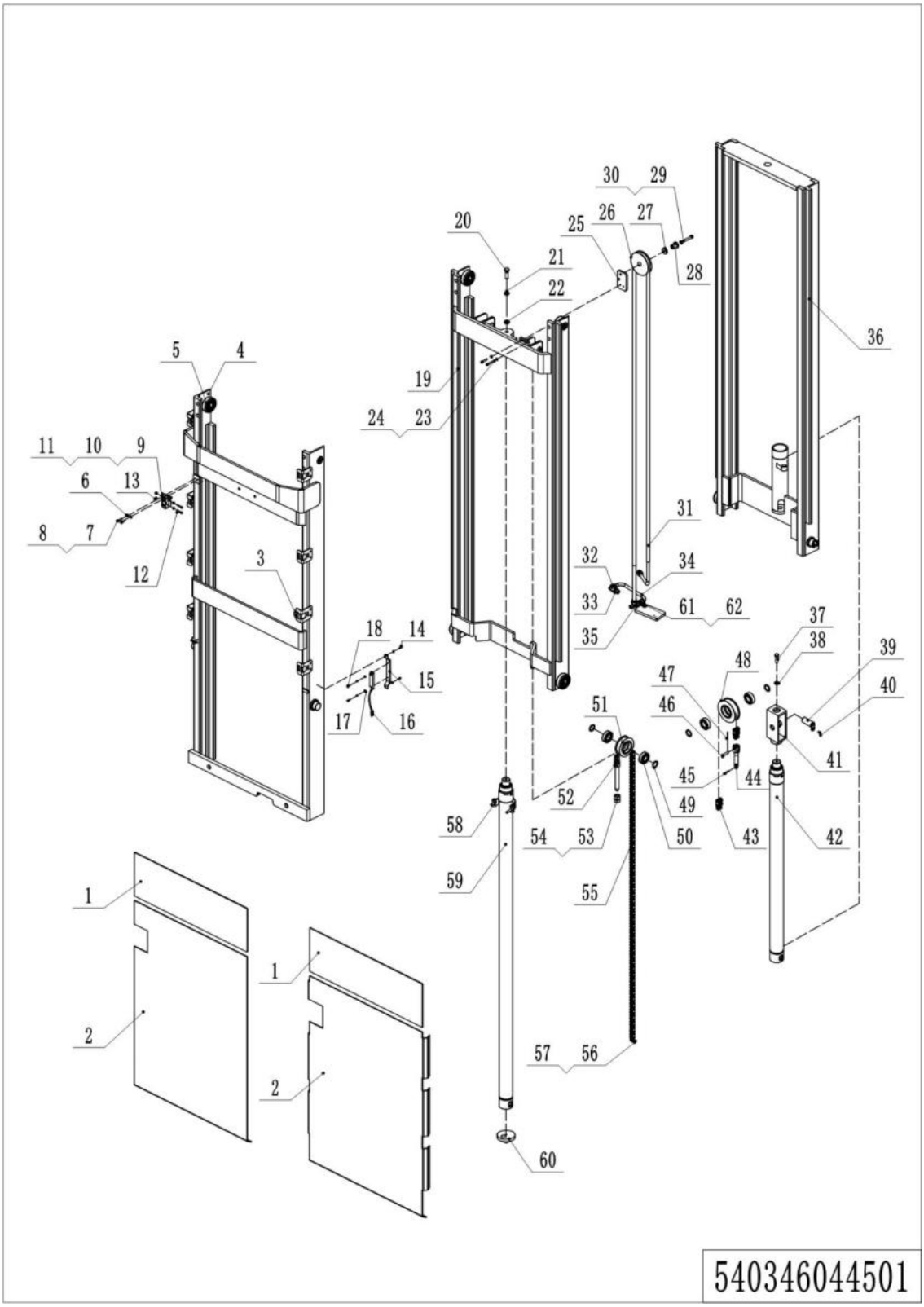

01 Three stage mast Free Lift (540346044501)

No.	Item Code	Mark	Item Description	Qty.	Substitute	Note
1	540244520027		Guard Plate	1		
2	540244520026		Guard Plate	1		
2	540251520003		Guard Plate	1		Bending
3	940400300001		Buckle	8		
4	540244510001		Outer Mast	1		
5	940200300003		Compound Roller	12		
6	910200200033		Screw M6x12	4		
7	910400500005		Spring Washer	2		
8	910400100005		Flat Washer	2		
9	920200300003		Microswitch	1		
10	920200300007		Guard Cover	1		
11	540244520028		Mounting Plate	1		
12	910200200152		Screw M4x35	2		
13	910300500001		Nut M4	2		
14	910200200013		Screw M4x10	2		
15	534744520080		Guard Cover	1		
16	540333510021	1	Magnetic Switch	2		
17	910400500003		Spring Washer	2		
18	910200500020		Screw M4x6	2		
19	540244510002		Middle Mast	1		
20	910200200100		Screw M12x40	1		
21	910400500008		Spring Washer	1		
22	910400100008		Flat Washer	1		
23	910200200024		Screw M5x20	2		
24	910400100004		Flat Washer	2		
25	563044520027		Mounting Plate	1		
26	532643520132		Pulley	1		
27	563044520035		Plate	1		
28	563044520036		Bushing	1		
29	910400100006		Flat Washer	1		

01 Three stage mast Free Lift (540346043501) continuation

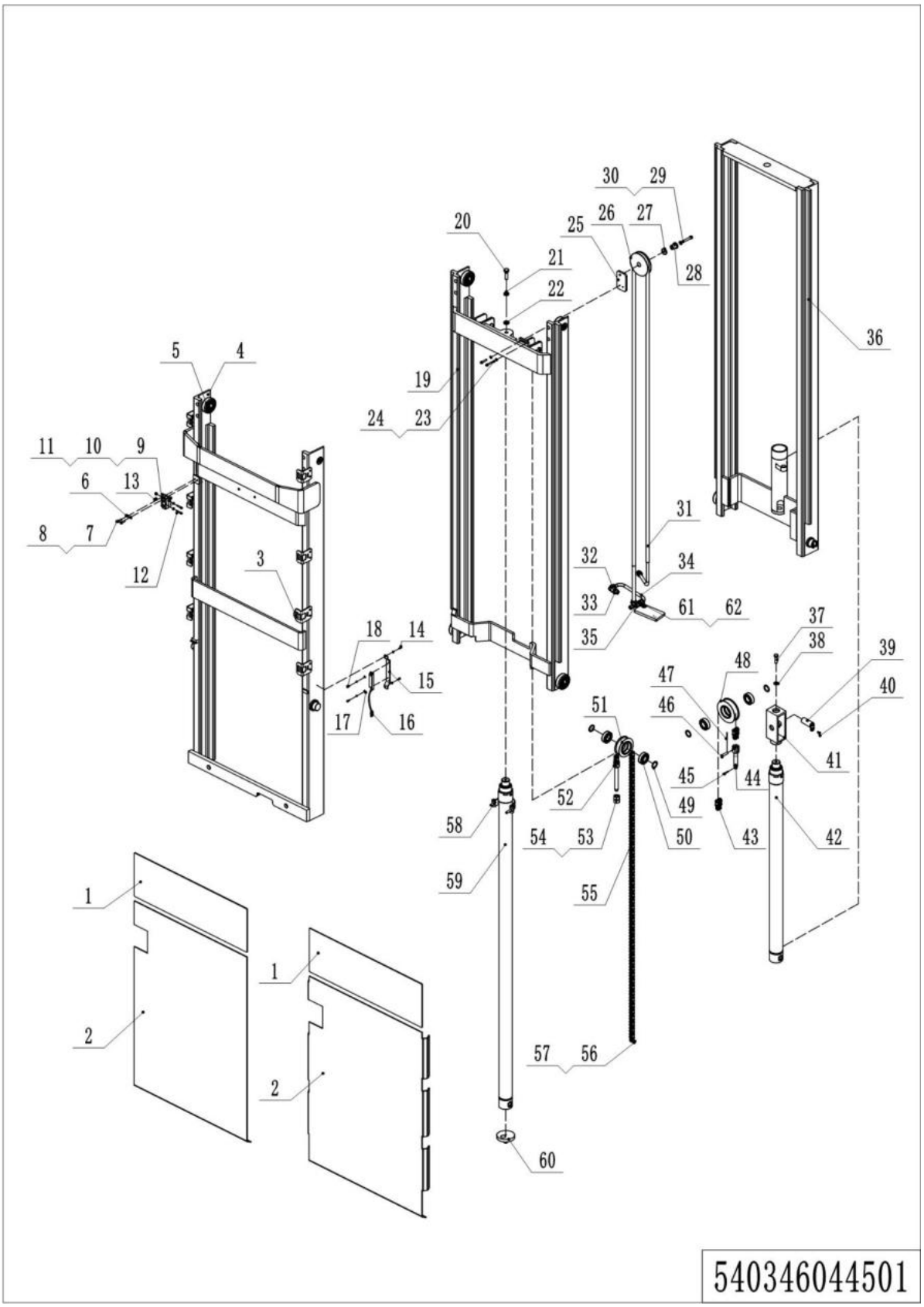

01 Three stage mast Free Lift (540346043501) continuation

No.	Item Code	Mark	Item Description	Qty.	Substitute	Note
30	910200200063		Screw M8x50	1		
31	540224520001		Hose	1		
32	950400200003		Joint	1		
33	950400400003		Joint	2		
34	540324520001		Steel Tube	1		
35	950400700002		Joint	1		
36	540244510003		Inner Mast	1		
37	910100300049		Bolt M12x25	1		
38	910400500008		Spring Washer	1		
39	533243510005		Pin	3		
40	910200400016		Screw M6x12	3		
41	540244520022		Yoke	1		
42	540244510004		Cylinder	1		
43	540244520024		Chain	1		
44	533243520008		Chain Bolt	1		
45	910600600034		Cotter Pin	3		
46	941100800007		Pin	3		
47	910600600015		Cotter Pin	3		
48	940200400002		Sprocket	1		
49	940600500006		Washer	6		
50	910700200020		Bearing	6		
51	94020040001		Sprocket	2		
52	271544020107		Chain Bolt	2		
53	910300400006		Nut 16	2		
54	910300200008		Nut 16	2		
55	540244520031		Chain	2		
56	910600700017		Pin	2		
57	910600600030		Cotter Pin	2		
58	940800600004		Hug Hoop Components	1		
59	540244510005		Cylinder	1		

01 Three stage mast Free Lift (540346043501) continuation

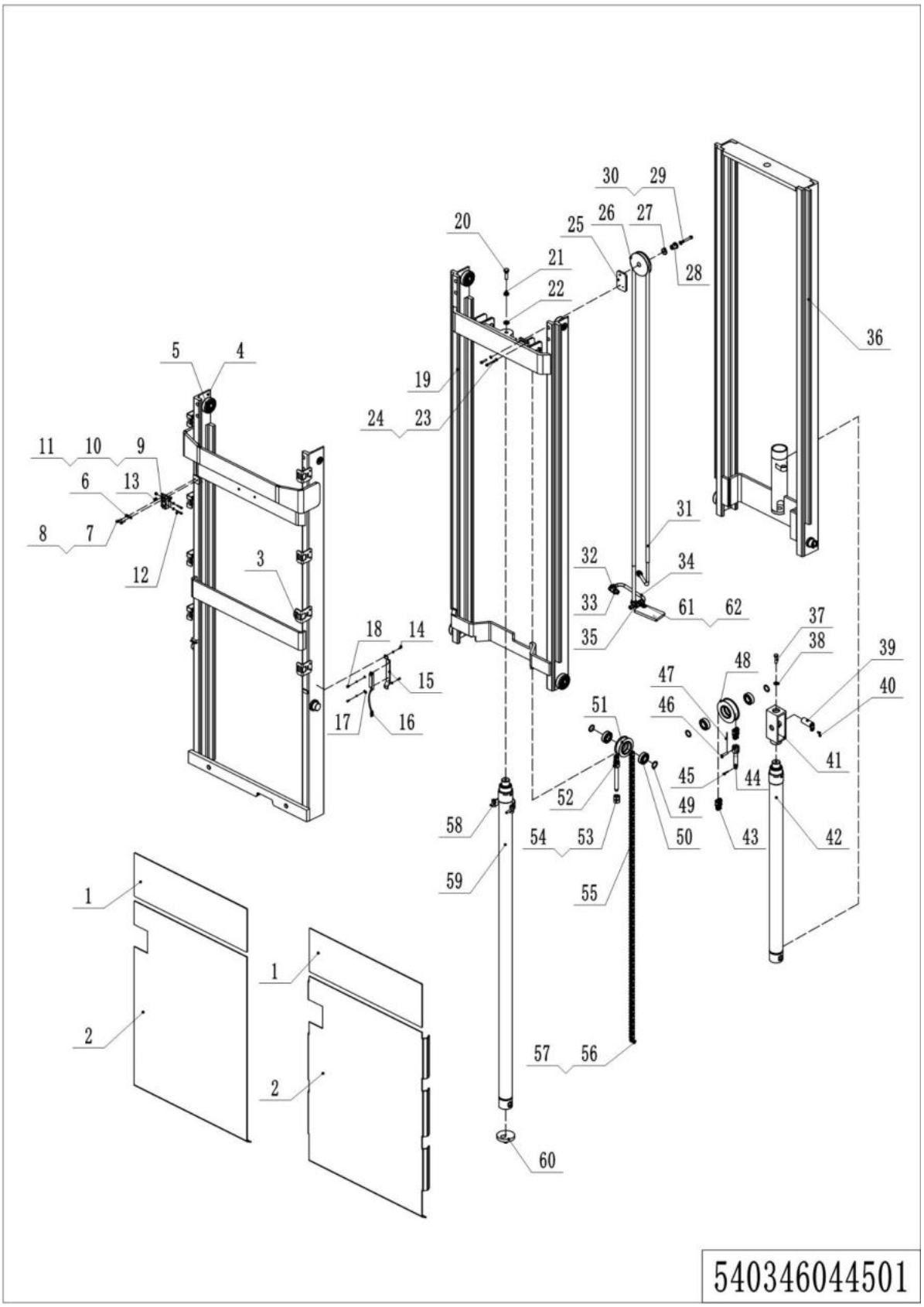

01 Three stage mast Free Lift (540346043501) continuation

No.	Item Code	Mark	Item Description	Qty.	Substitute	Note
60	540244510007		Pedestal	1		
61	540344520001		Mounting Plate	1		
62	951000100003		Hose Clamp	1		

Chapter 6: Electrical parts and wire harness

01 Wire harness (532246033001)

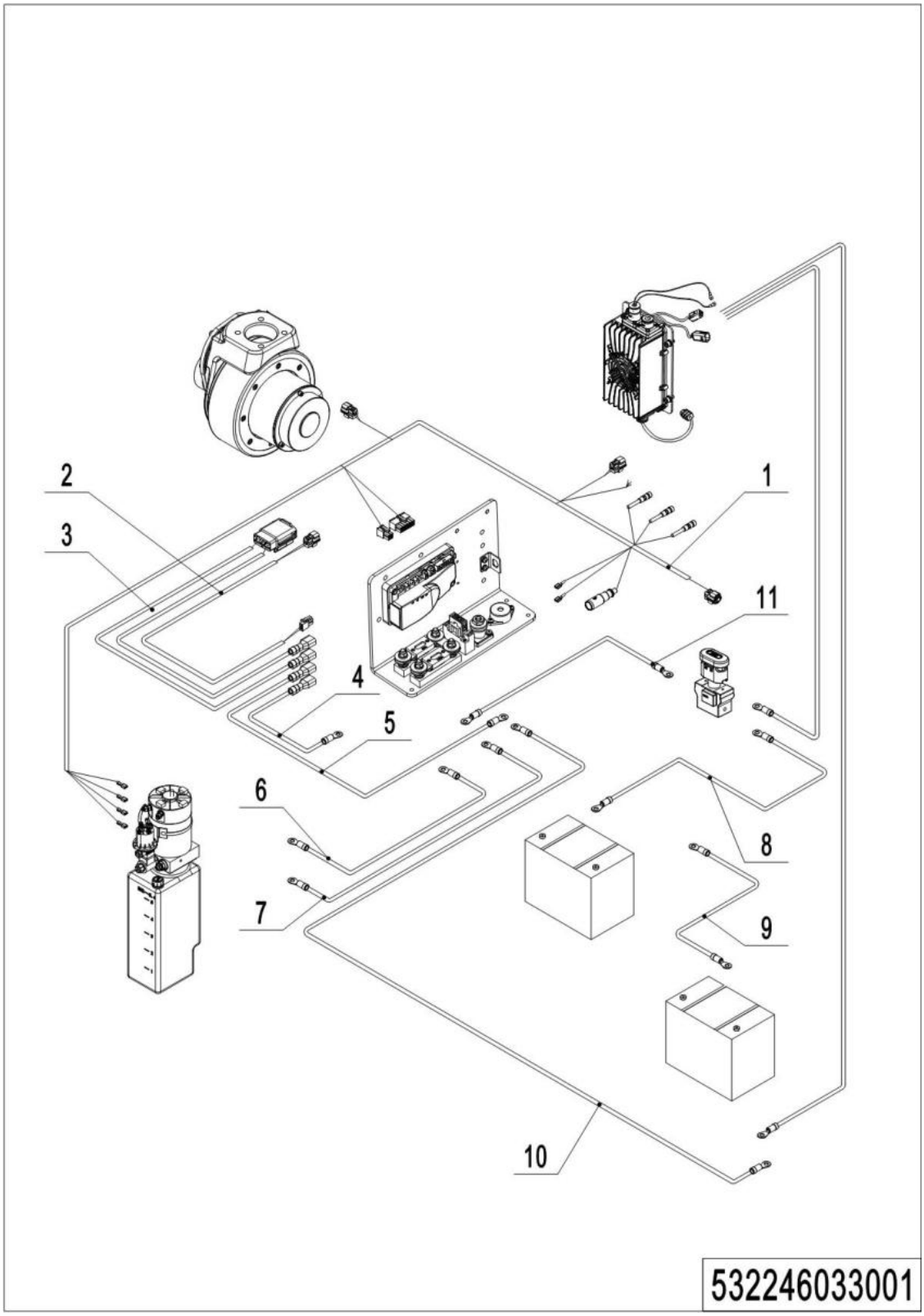

1=Supply as package; 2=Supply with limit; 3=Phasing out supply; 4=Supply as assembly; 5=Check other lists.

01 Wire harness (532246033001)

No.	Item Code	Mark	Item Description	Qty.	Substitute	Note
1	532233010000		Wire Harness	1		
2	532233010003		Wire Harness	1		
3	532233010004		Wire Harness	1		
4	532233010005		Cables	1		
5	532233010006		Cables	1		
6	532233010007		Cable	1		
7	532233010009		Cable	1		
8	532233010010		Cable	1		85AH
8	532233010013		Cable	1		106AH
9	532233010011		Cable	1		85AH
9	532233010014		Cable	1		106AH
10	532233010012		Cable	1		85AH
10	532233010015		Cable	1		106AH
11	532233010016		Cable	1		

02 Wire harness (EN1175:2020) (532246033010)

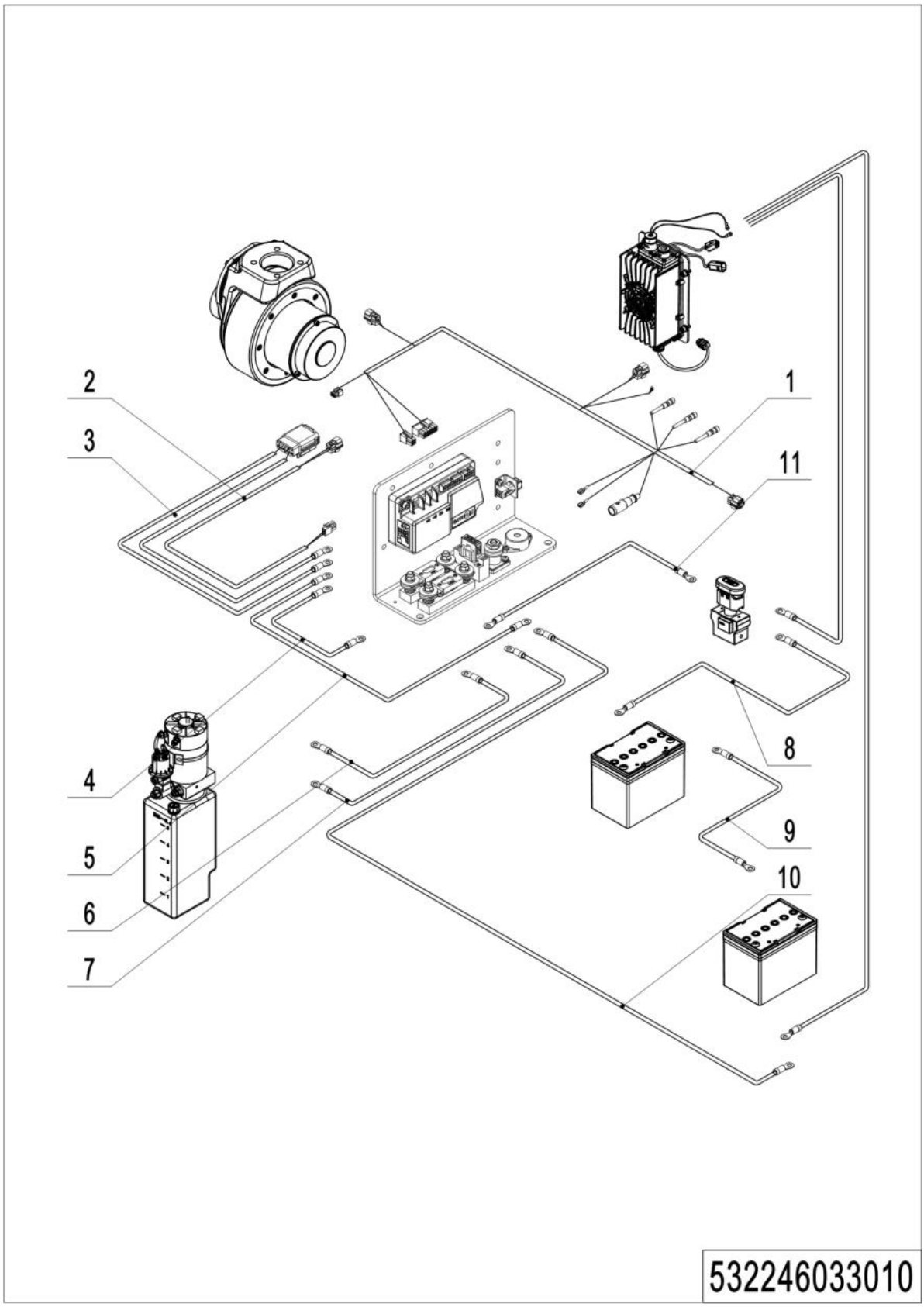

1=Supply as package; 2=Supply with limit; 3=Phasing out supply; 4=Supply as assembly; 5=Check other lists.

02 Wire harness (EN1175:2020) (532246033010)

No.	Item Code	Mark	Item Description	Qty.	Substitute	Note
1	532233010032		Wire Harness	1		
2	532233010035		Wire Harness	1		
3	532233010036		Wire Harness	1		
4	532233010037		Cables	1		
5	532233010038		Cables	1		
6	532233010007		Cable	1		
7	532233010009		Cable	1		
8	532233010010		Cable	1		85AH
8	532233010013		Cable	1		106AH
9	532233010011		Cable	1		85AH
9	532233010014		Cable	1		106AH
10	532233010012		Cable	1		85AH
10	532233010015		Cable	1		106AH
11	532233010016		Cable	1		

03 Wire harness (lithium battery) (532246033002)

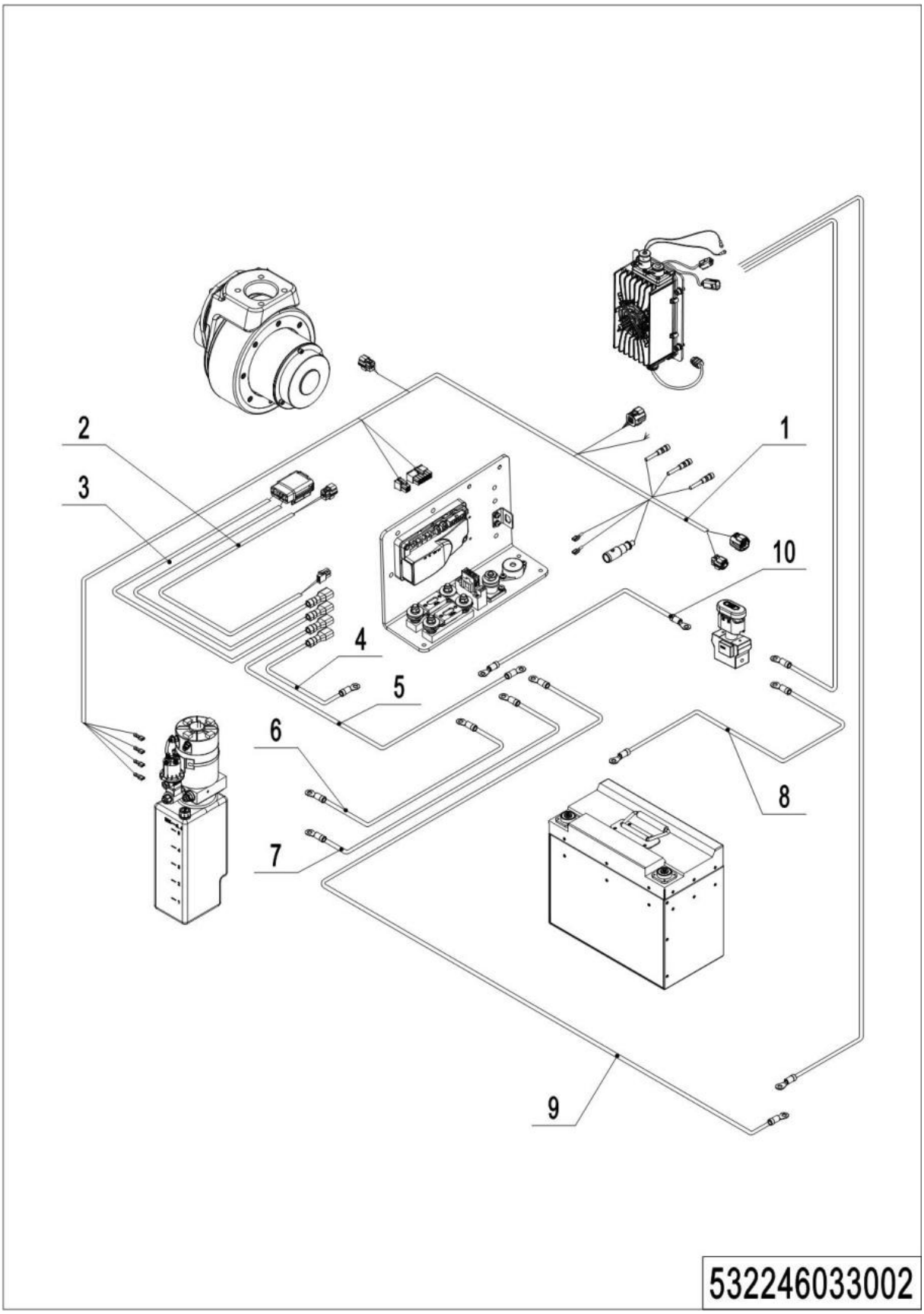

1=Supply as package; 2=Supply with limit; 3=Phasing out supply; 4=Supply as assembly; 5=Check other lists.

03 Wire harness (lithium battery) (532246033002)

No.	Item Code	Mark	Item Description	Qty.	Substitute	Note
1	532233010001		Wire Harness	1		
2	532233010003		Wire Harness	1		
3	532233010004		Wire Harness	1		
4	532233010005		Cables	1		
5	532233010006		Cables	1		
6	532233010007		Cable	1		
7	532233010009		Cable	1		
8	532233010020		Cable	1		
9	532233010021		Cable	1		
10	532233010016		Cable	1		

04 Wire harness (lithium battery, EN1175:2020) (532246033011)

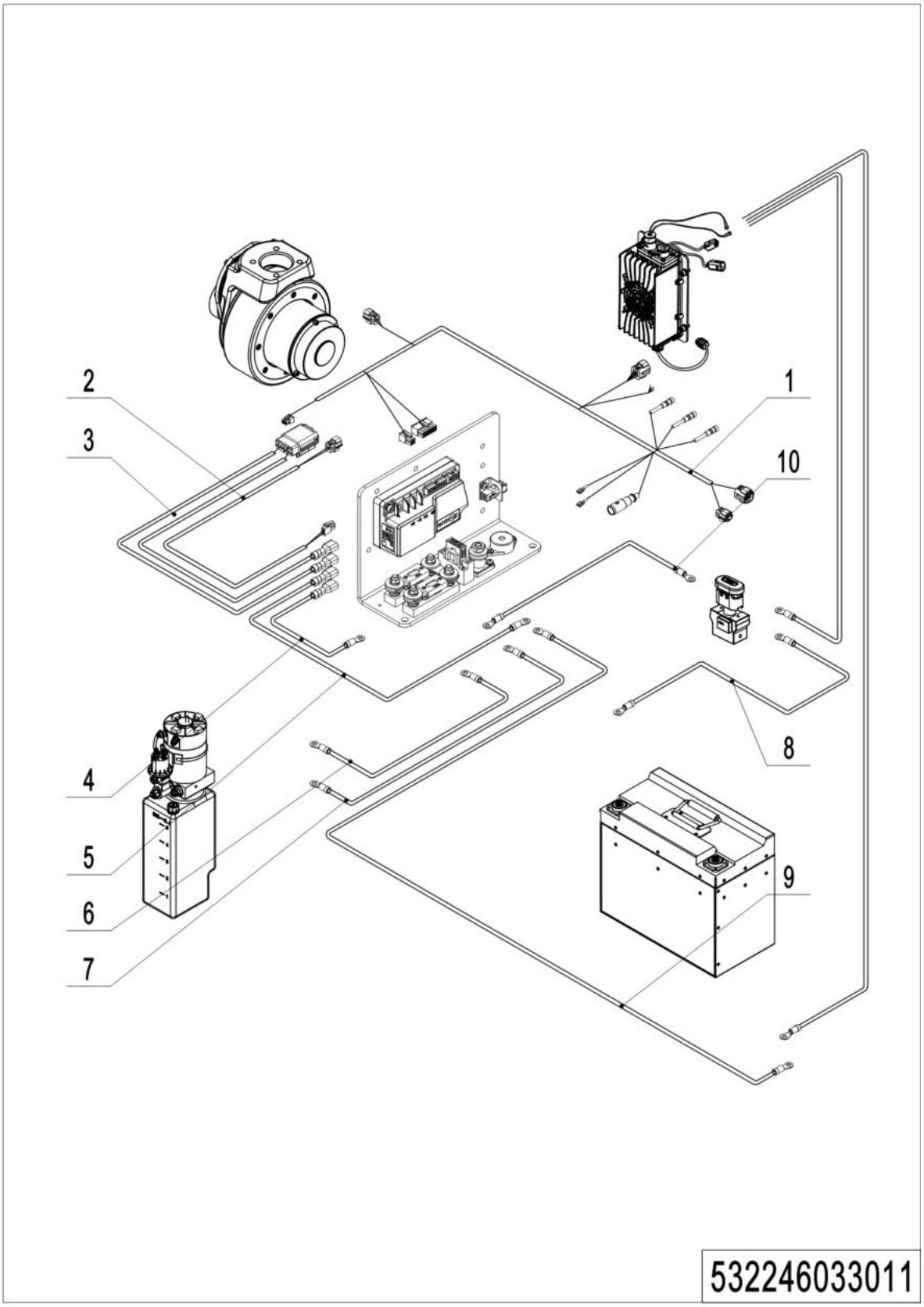

1=Supply as package; 2=Supply with limit; 3=Phasing out supply; 4=Supply as assembly; 5=Check other lists.

04 Wire harness (lithium battery, EN1175:2020) (532246033011)

No.	Item Code	Mark	Item Description	Qty.	Substitute	Note
1	532233010042		Wire Harness	1		
2	532233010035		Wire Harness	1		
3	532233010036		Wire Harness	1		
4	532233010037		Cables	1		
5	532233010038		Cables	1		
6	532233010007		Cable	1		
7	532233010009		Cable	1		
8	532233010020		Cable	1		
9	532233010021		Cable	1		
10	532233010016		Cable	1		

05 Electrical control unit (536746033003)

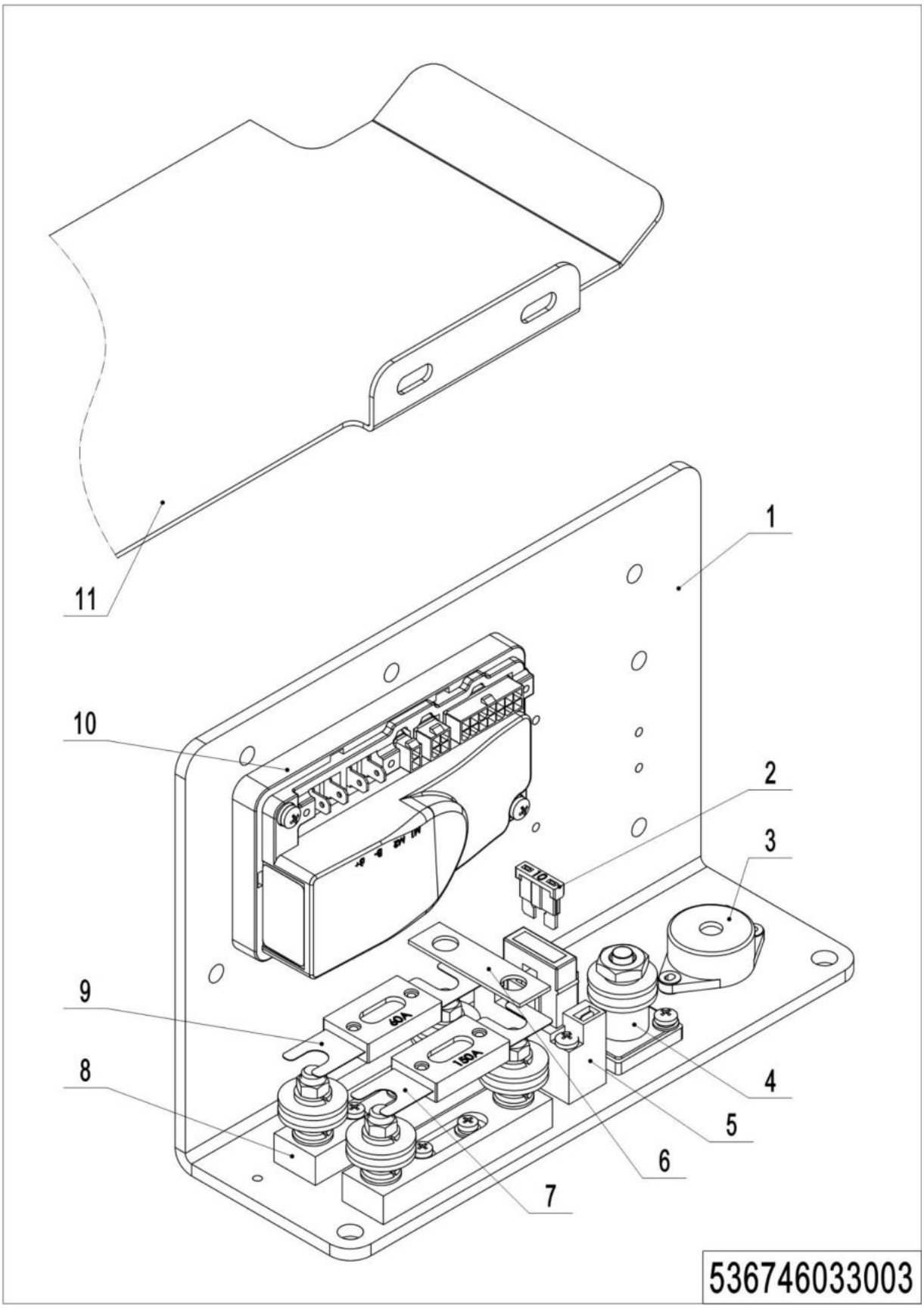

1=Supply as package; 2=Supply with limit; 3=Phasing out supply; 4=Supply as assembly; 5=Check other lists.

05 Electrical control unit (536746033003)

No.	Item Code	Mark	Item Description	Qty.	Substitute	Note
1	532233020001		Mounting Plate	1		
2	920100200002		Fuse	1		
3	920500100007		Horn	1		
4	920100400001		Fuse Holder	1		
5	920100400006		Fuse Holder	1		
6	505633020003		Copper Busbar	1		
7	920100100007		Fuse	1		
8	920100400002		Fuse Holder	2		
9	920100100003		Fuse	1		
10	921400100081		Controller	1		
10	921400100174		Controller	1		EN1175:2020
11	536712520008		Baffle	1		lead-acid battery
11	536712520009		Baffle	1		Lithium battery

06 Charger (lead-acid battery) (532246036501)

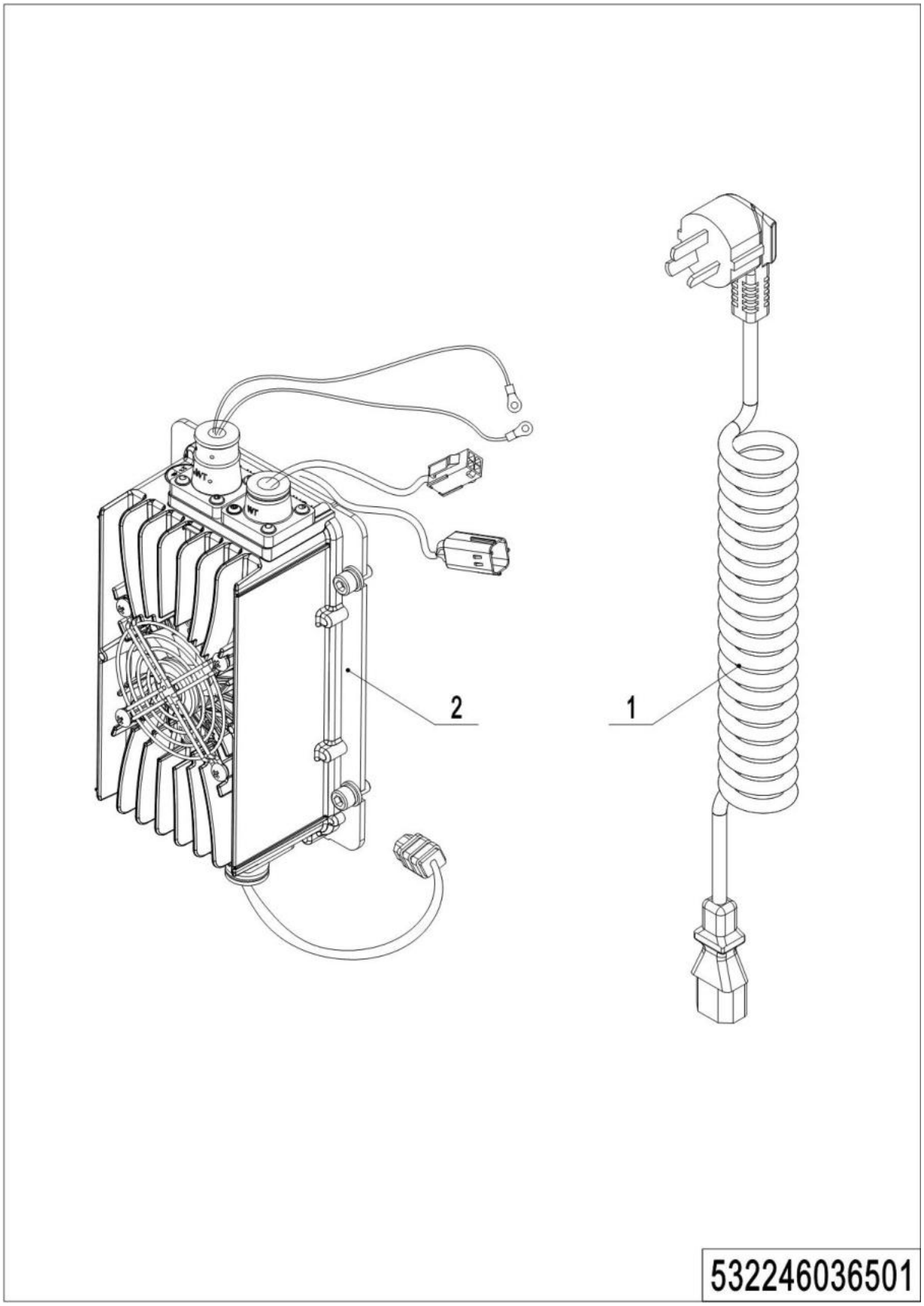

1=Supply as package; 2=Supply with limit; 3=Phasing out supply; 4=Supply as assembly; 5=Check other lists.

06 Charger (lead-acid battery) (532246036501)

No.	Item Code	Mark	Item Description	Qty.	Substitute	Note
1	921500200008		Spring Cable（Asia）	1		
1	921500200005		Spring Cable(EU)	1		EN1175:2020
1	921500200003		Spring Cable(AUS)	1		
1	921500200004		Spring Cable(ENG)	1		EN1175:2020
1	921500200002		Spring Cable(USA)	1		
1	921500200037		Spring Cable(ARG)	1		
1	921500200006		Spring Cable(ITY)	1		EN1175:2020
1	921500200007		Spring Cable(SWD)	1		EN1175:2020
1	921500200029		Spring Cable(ISR)	1		
1	921500200061		Spring Cable(BRA)	1		
1	921500200065		Spring Cable(ZA)	1		
1	921500200067		Spring Cable(JP)	1		
1	921500200066		Spring Cable(IND)	1		
1	921500200068		Spring Cable(Peru)	1		
2	921000100051		Charger24V12V	1		

07 Charger (lithium battery) (532246036502)

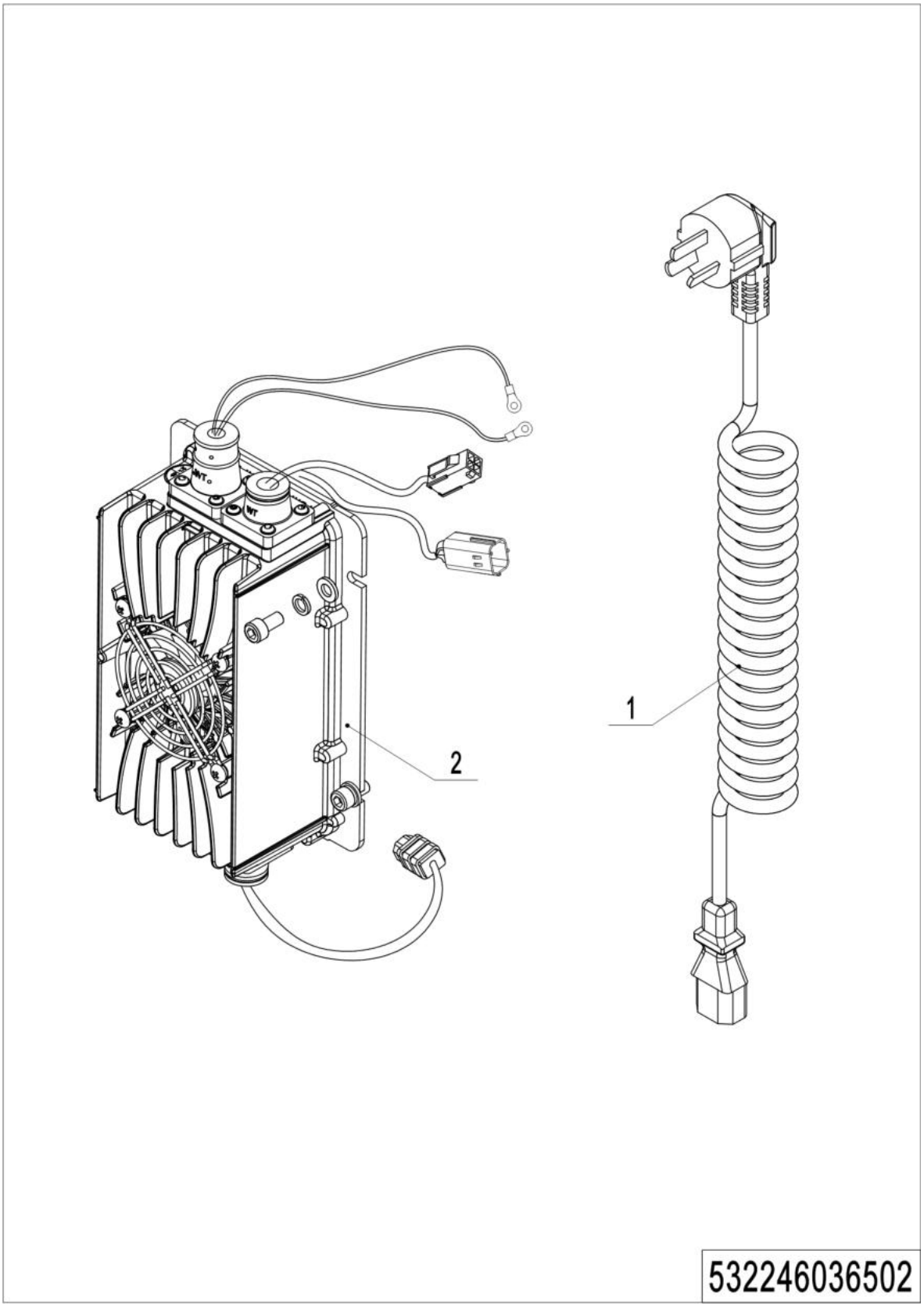

1=Supply as package; 2=Supply with limit; 3=Phasing out supply; 4=Supply as assembly; 5=Check other lists.

07 Charger (lithium battery) (532246036502)

No.	Item Code	Mark	Item Description	Qty.	Substitute	Note
1	921500200008		Spring Cable（Asia）	1		
1	921500200005		Spring Cable(EU)	1		EN1175:2020
1	921500200003		Spring Cable(AUS)	1		
1	921500200004		Spring Cable(ENG)	1		EN1175:2020
1	921500200002		Spring Cable(USA)	1		
1	921500200037		Spring Cable(ARG)	1		
1	921500200006		Spring Cable(ITY)	1		EN1175:2020
1	921500200007		Spring Cable(SWD)	1		EN1175:2020
1	921500200029		Spring Cable(ISR)	1		
1	921500200061		Spring Cable(BRA)	1		
1	921500200065		Spring Cable(ZA)	1		
1	921500200067		Spring Cable(JP)	1		
1	921500200066		Spring Cable(IND)	1		
1	921500200068		Spring Cable(Peru)	1		
2	921000100052		Charger 24V25A	1		

Chapter 7: Special equipment

01 Load backrest (536746040501)

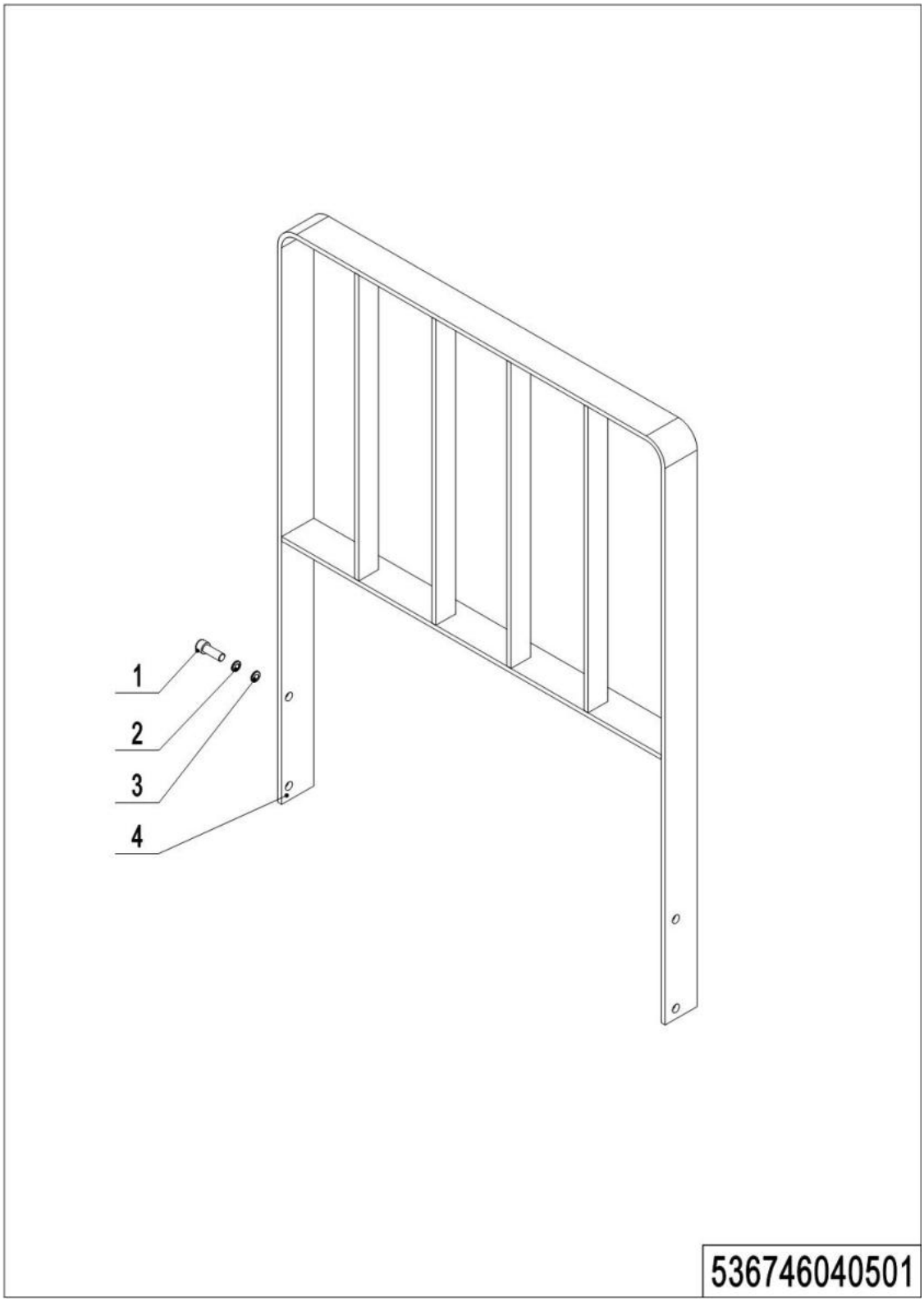

01 Load backrest (536746040501)

No.	Item Code	Mark	Item Description	Qty.	Substitute	Note
1	910200200075	1	Screw	4		
2	910400500007	1	Spring Washer	4		
3	910400100007	1	Flat Washer	4		
4	532340510003		Load Backrest	1		

Chapter 8: Others

01 Labels and decals (EU) (536746047001)

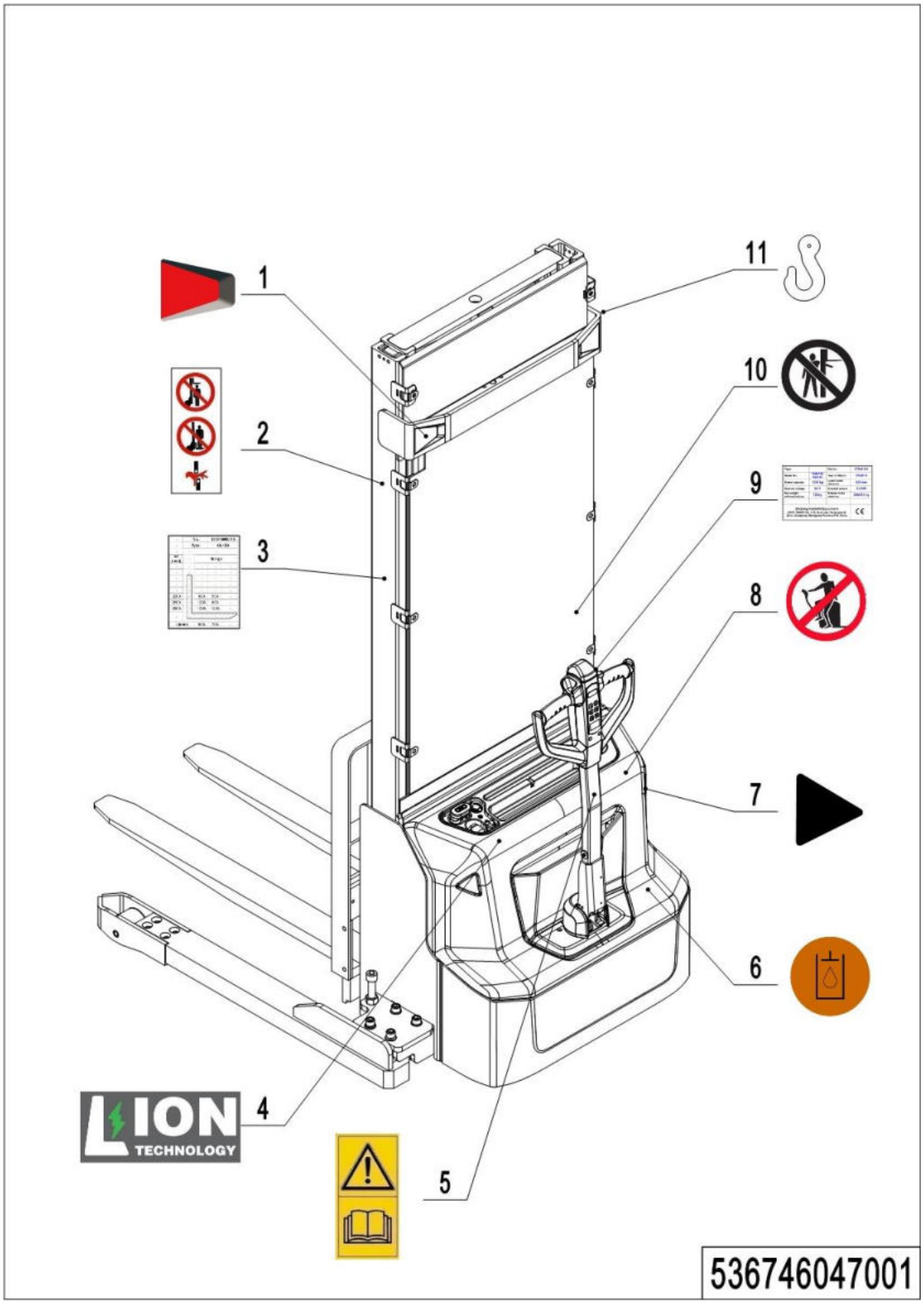

01 Labels and decals (EU) (536746047001)

No.	Item Code	Mark	Item Description	Qty.	Substitute	Note
1	532247020007		Warning decal	1		
2	941200100004		Label	2		
3	536747520001		Load Capacity Diagram	1		
4	532247020002		Label	1		For lithium battery
5	941200300002		Label	1		
6	941200300003		Label	1		Internal
7	532247020000		Label	2		
8	941200100003		Label	1		
9	536747520017		Label (ID plate with CE mark)	1		
10	941200100006		Label	1		
11	941200300001		Label	2		

02 Labels and decals (USA) (536746047002)

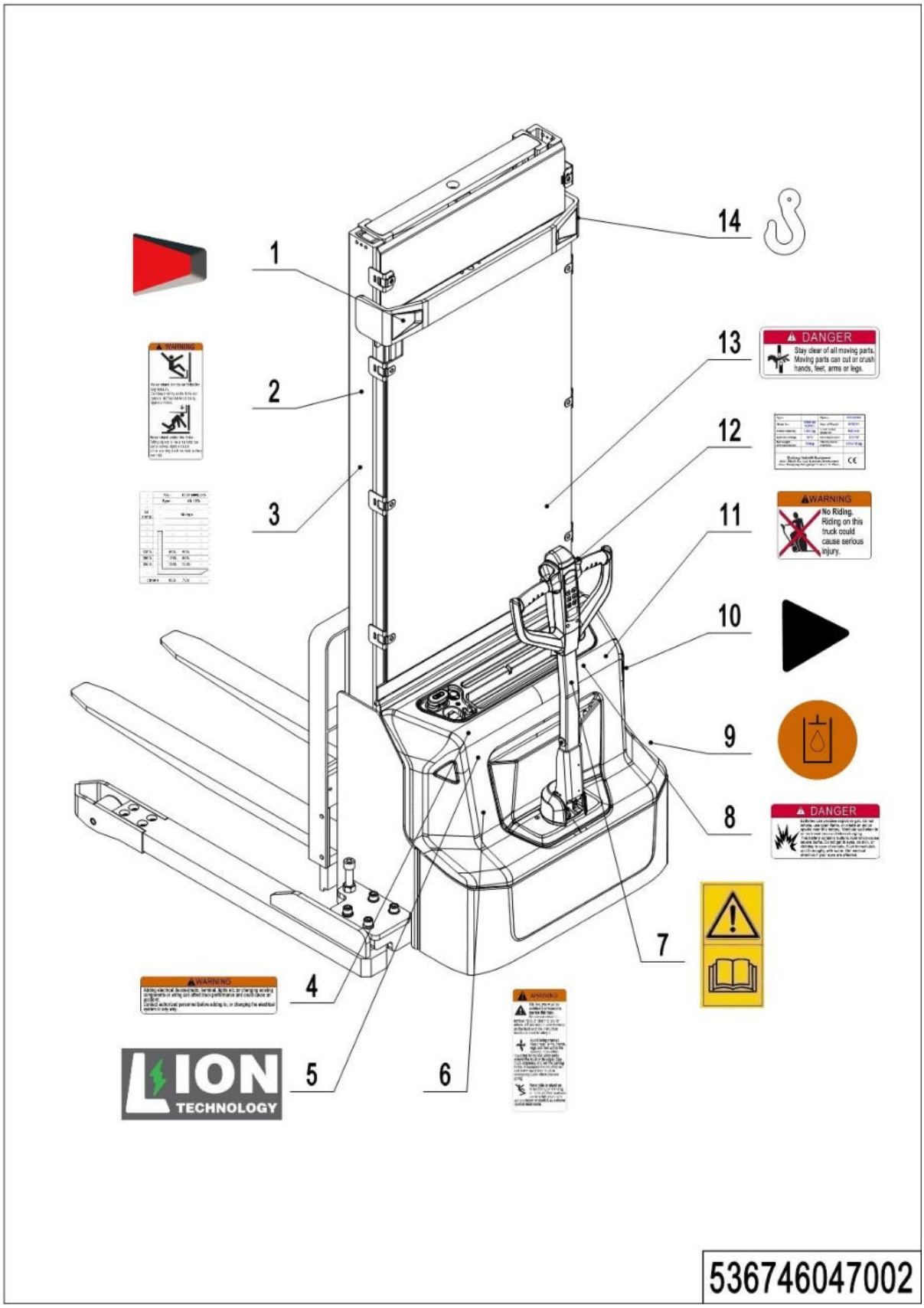

1=Supply as package; 2=Supply with limit; 3=Phasing out supply; 4=Supply as assembly; 5=Check other lists.

02 Labels and decals (USA) (536746047002)

No.	Item Code	Mark	Item Description	Qty.	Substitute	Note
1	532247020007		Warning decal	1		
2	941200100016		Label	2		
3	536747520001		Load Capacity Diagram	1		
4	941200100010		Label	1		
5	532247020002		Label	1		For lithium battery
6	941200100009		Label	1		
7	941200300002		Label	1		
8	941200100013		Label	1		
9	941200300003		Label	1		Internal
10	532247020000		Label	2		
11	941200100011		Label	1		
12	536747520017		Label (ID plate with CE mark)	1		
13	941200100014		Label	1		
14	941200300001		Label	2		

Appendix

01 Electrical circuit diagram (lead-acid battery) (532246045501)

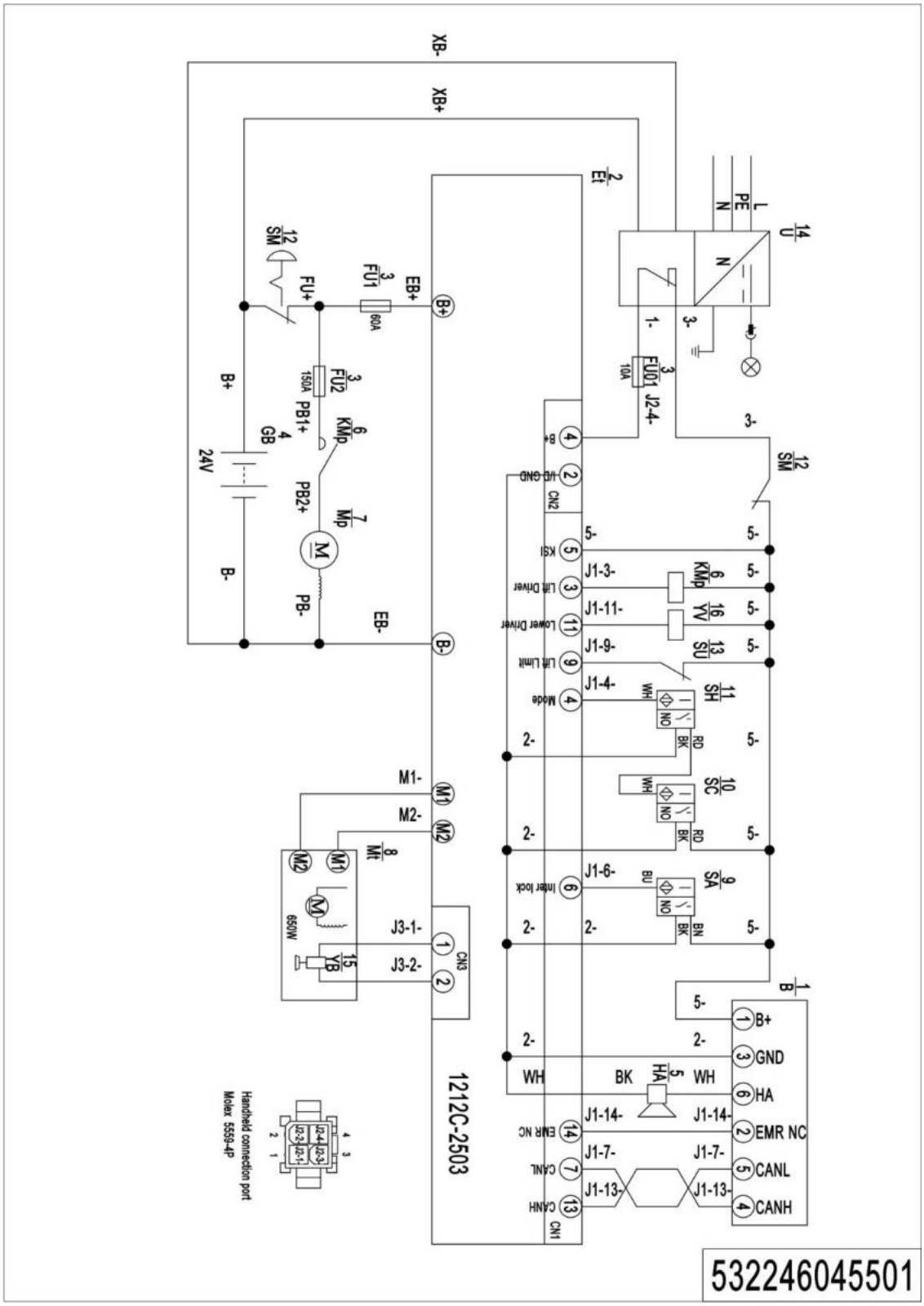

02 Electrical circuit diagram (Lithium battery) (532246045502)

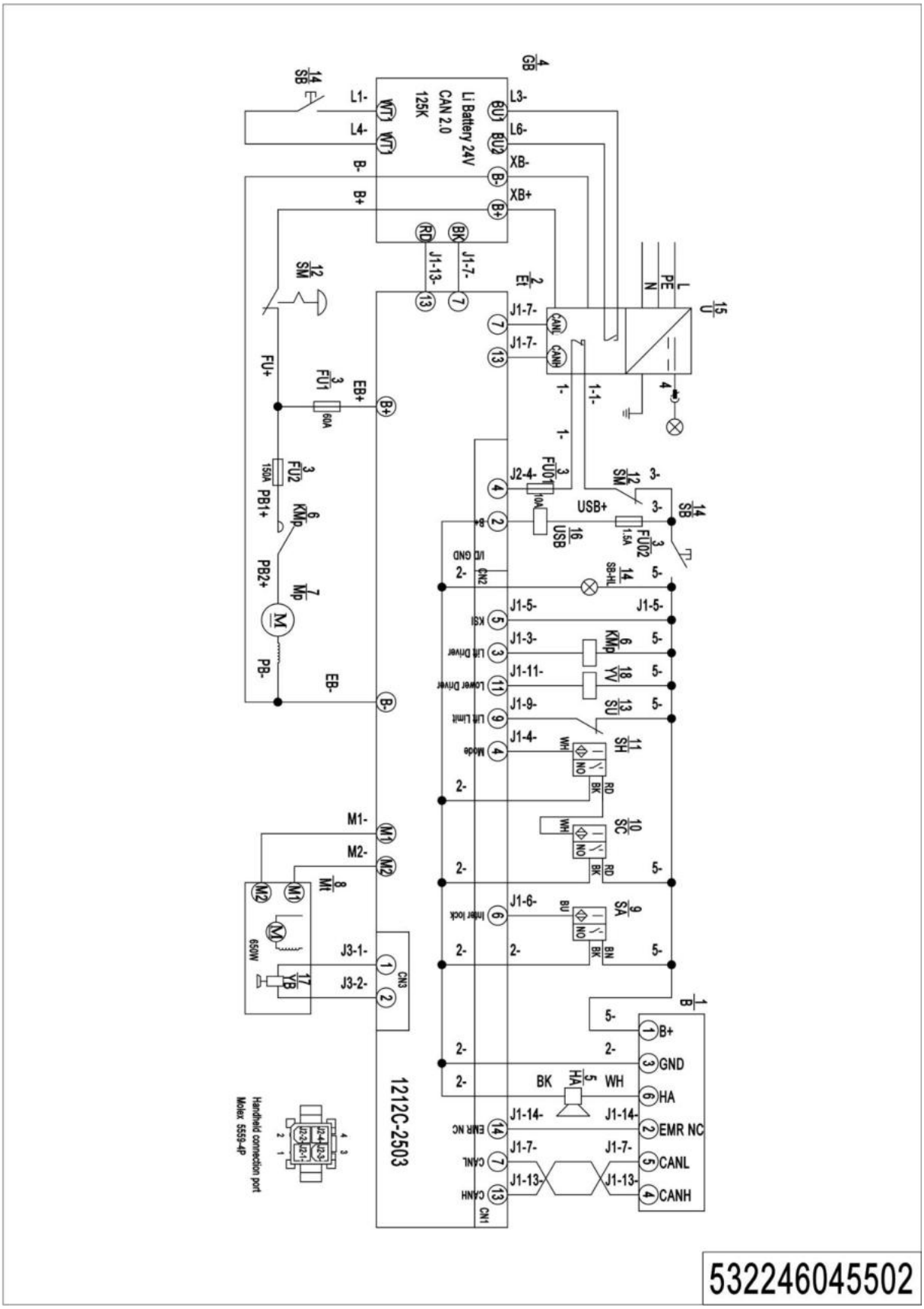

03 Electrical circuit diagram (lead-acid battery, EN1175:2020) (532246045510)

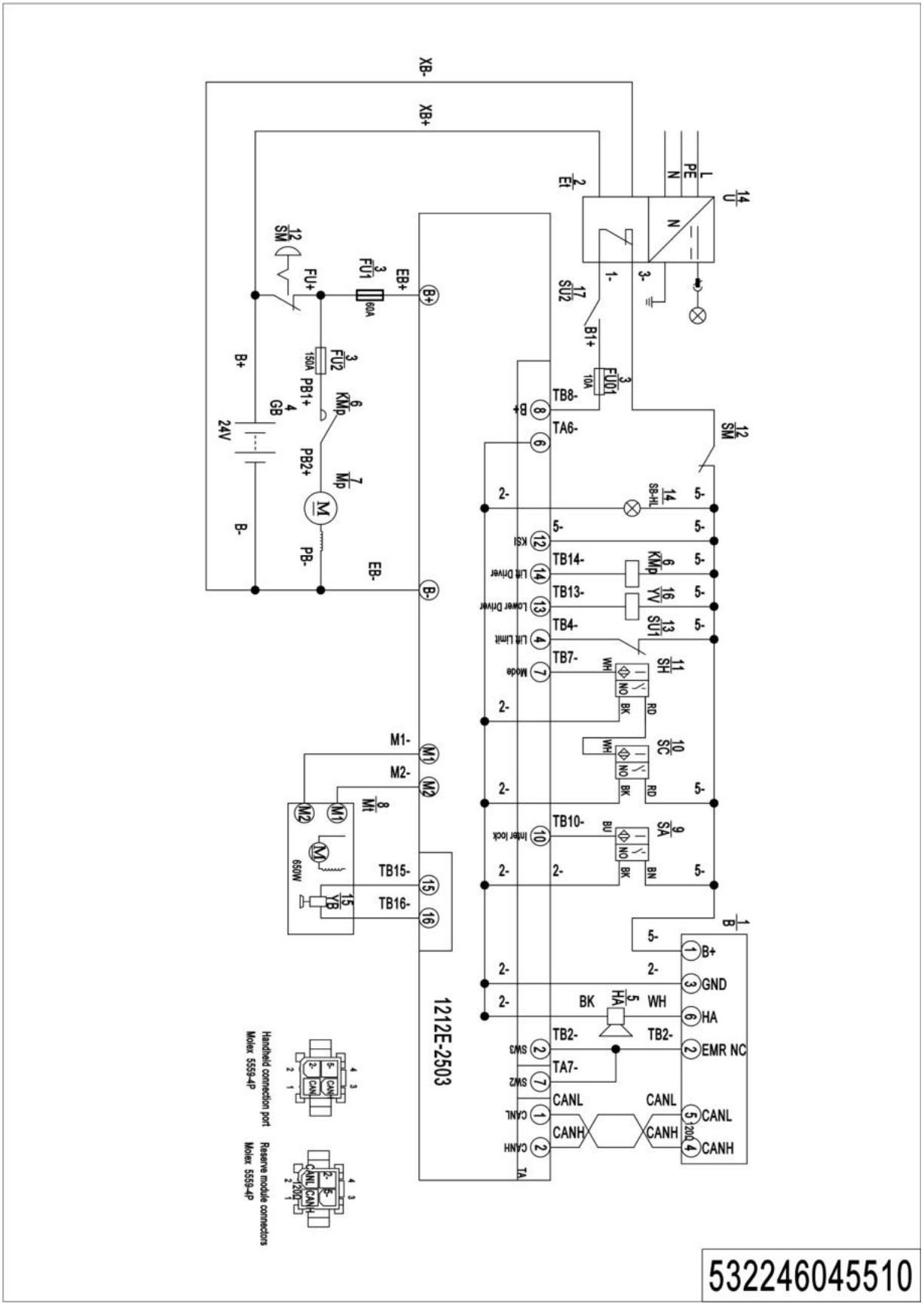

04 Electrical circuit diagram (Lithium battery, EN1175:2020) (532246045511)

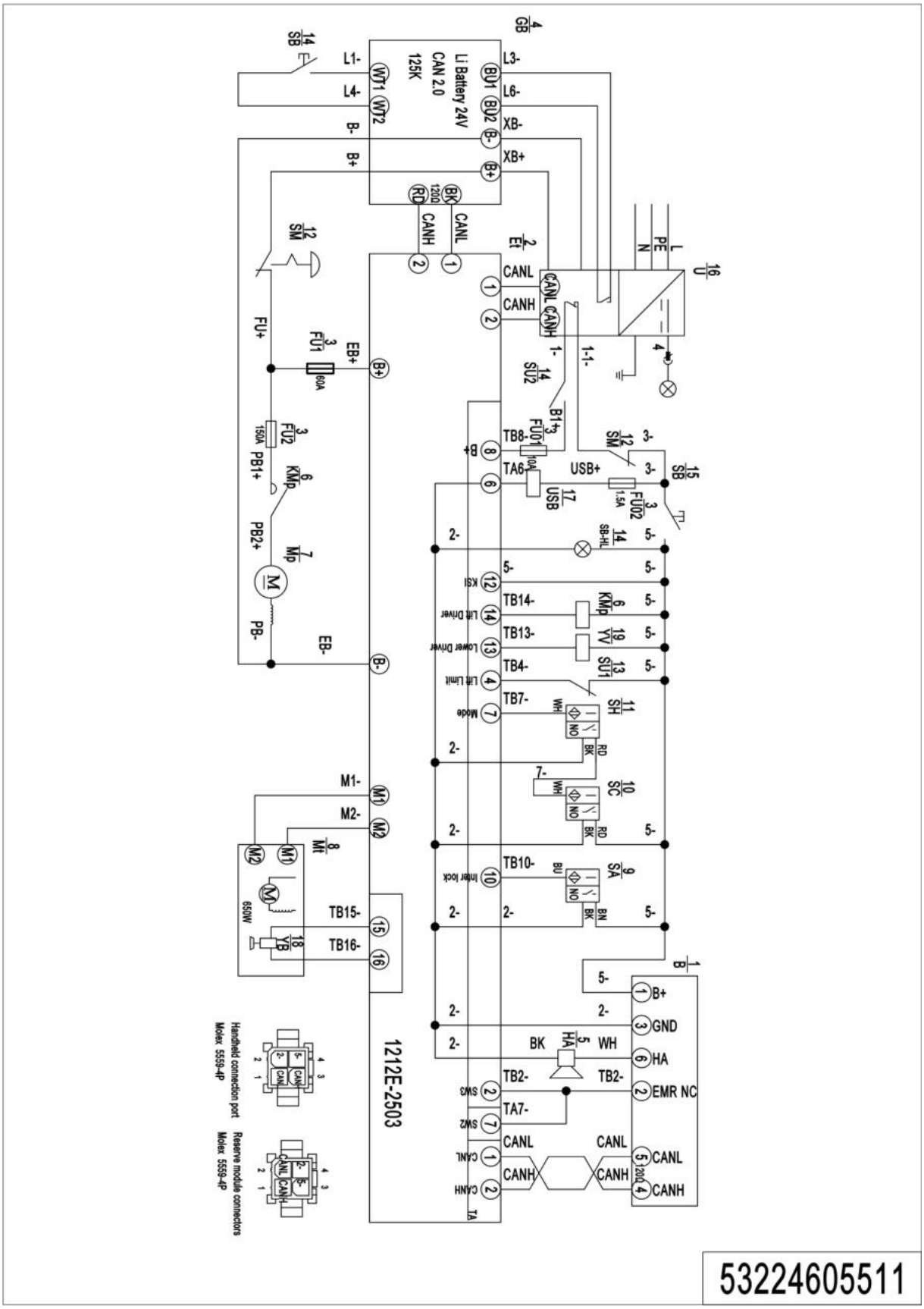

05 Hydraulic circuit diagram (532246045503)

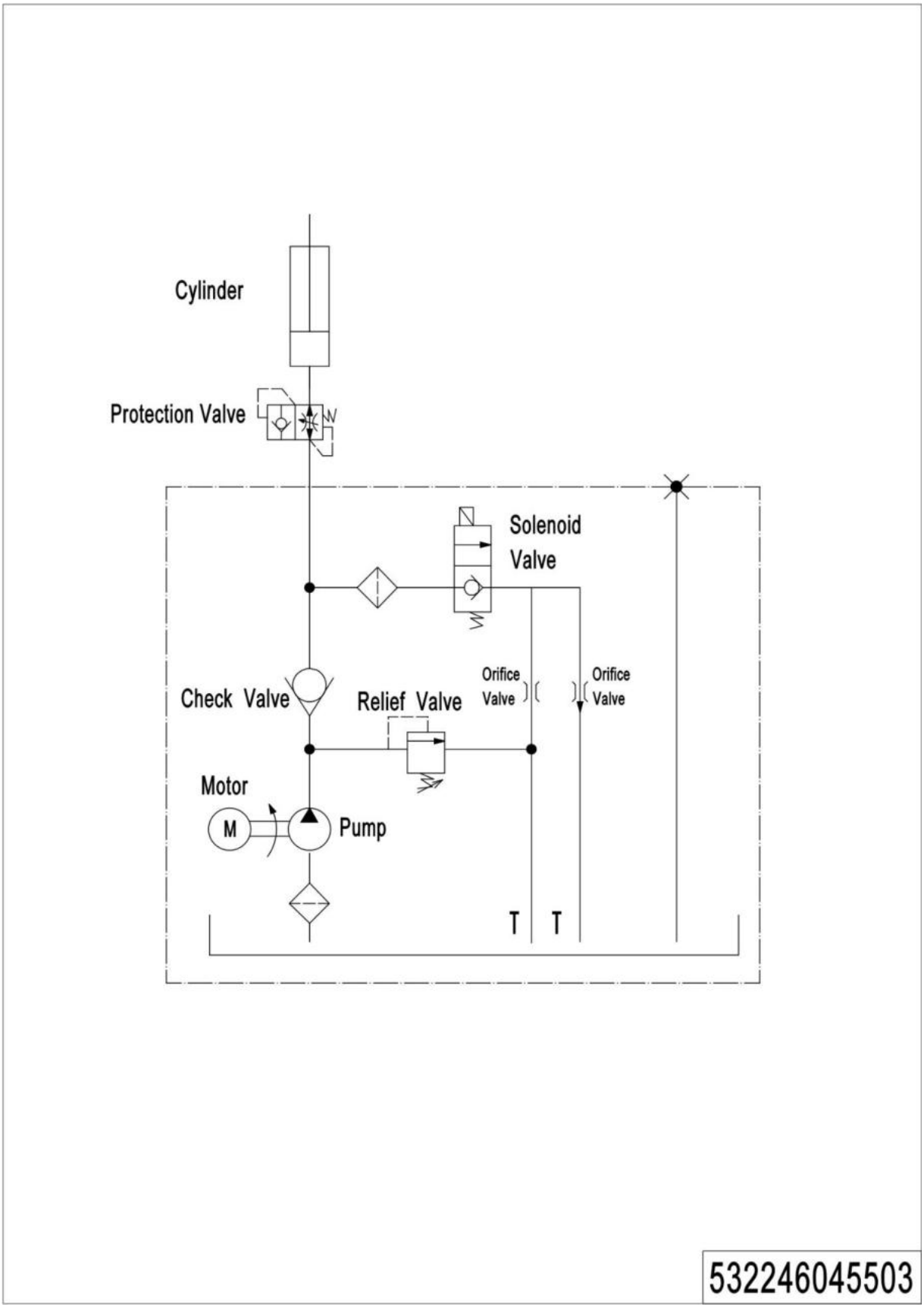

06 Easy worn parts list

No.	Item Code	Item Description	Qty.	Chapter/ Section/ Number
1	910700200019	Bearing	4	Chapter 4/05/2.01 Chapter 4/06/21.02
2	940300300009	WheelΦ84x70	2	Chapter 4/05/2
3	532998510000	Wheel	2	Chapter 4/05/3
4	532298510002	Seal Kit	1	Chapter 5/01/46.01 Chapter 5/02/33.01
5	940300300018	WheelΦ100x40	2	Chapter 4/06/5
6	503598510003	Caster Assembly	2	Chapter 4/06/6
7	532211020003	Gas Spring	1	Chapter 4/01/7
8	940500200001	Bushing	2	Chapter 4/01/8
9	910700200020	Bearing	2	Chapter 5/01/37 Chapter 5/02/23
10	920100100003	Fuse	1	Chapter 6/05/9
11	920100100007	Fuse	1	Chapter 6/05/11
12	920100200002	Fuse	1	Chapter 6/05/12