Electric Pallet Stacker SWB-130

High lift

PARTS MANUAL

540246020101

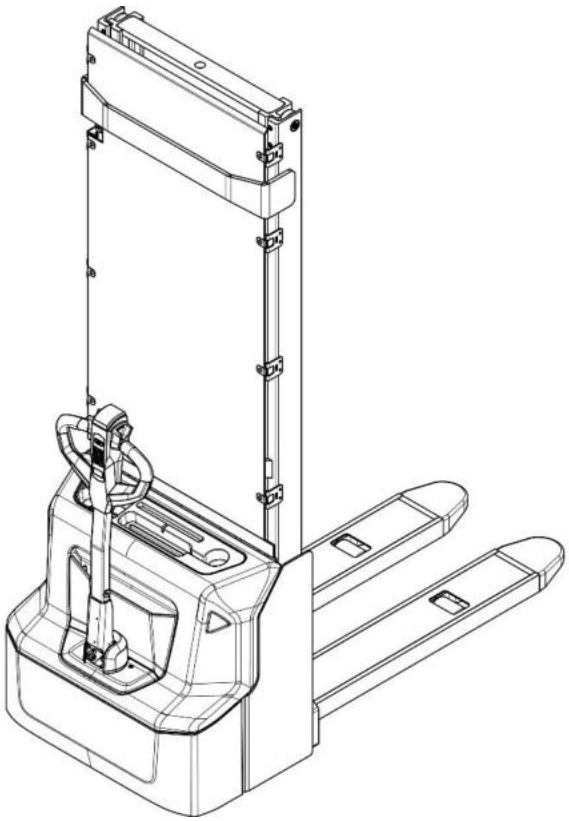

Version: V01

Truck Identification Number From:

Parts Manual SWB-130-PM01EN

Please order spare parts from authorized dealers of our company.

In order to avoid wrong delivery, all the orders for spare parts should specify the following items:

- Truck model, identification number and manufacture year.
- Orders for spare parts of mast, hydraulic transmission unit, steering axle, motor, etc. shall indicate the manufacture number of these parts.
- Codes for our company spare parts are shown in the table of parts manual. Please also pay attention to the description of supply status, order quantity, etc. (check the number listed in "Mark" column of the parts manual).

"Mark" Column:

The unmarked indicates the parts are in short supply cycle.

Number 1: supply as package. Indicating these that parts are small parts and seal parts, which are supplied in package unit and in short supply cycle.

Number 2: supply with constraints. Indicating that these spare parts are not in stock and will be prepared for production after receiving the order from customers, which are in long supply cycle.

Number 3: phasing-out supply. Indicating that these parts will be replaced by new parts due to technical improvements and the current stock will not be available when these parts run out. Please check the description of technical improvements notice.

Number 4: supply as assembly. Indicating that these parts are assembly parts defined by manufacture process, which cannot be supplied as a single part.

Number 5: check other tables.

This parts manual is the property of our company and can be shared under the confidential agreement only, our company has the right to claim for compensation of any unauthorized use. Copy without permission is not allowed. Figures in the manual are not limited by the original design. our company reserves the right to improve the products for continuous technology progress.

TABLE OF CONTENTS

Chapter 1: Drive system 5

01 Drive unit (540246013501) 5

02 Drive Assembly (YX) (532246013002) 7

Chapter 2: Hydraulic system 9

01 Hydraulic unit (540246024501) 9

02 Pump unit (YX) (540246023501) 11

Chapter 3: Truck structure 13

01 Truck frame (540246021501) 13

02 Forks (540246038004) 15

03 Battery holder (540246012501) 17

04 Control panel assembly (20CE) (540246010001) 19

05 Control panel assembly (540246010002) 21

Chapter 4: Steering system, braking system and wheels 23

01 Tiller (540246011000) 23

02 Tiller head (SHIJIA) (540246011001) 25

03 Load wheel (532246017001) 27

04 Side wheel (532246016501) 30

05 Manual steering (532246031201) 32

Chapter 5: Mast system 34

01 Three stage mast Free Lift (540246044501) 34

01 Three stage mast Free Lift (540246044501) continuation 36

01 Three stage mast Free Lift (540246044501) continuation 38

Chapter 6: Electrical parts and wire harness 40

01 Wire harness (540246033001) 40

02 Electrical control unit (5402246033002) 42

03 Charger (540246036501) 44

Chapter 7: Special equipment 46

01 Load backrest (532246040501) 46

Chapter 8: Others 48

01 Labels and decals (EU) (540246047001) 48

02 Labels and decals (USA) (540246047002) 50

Appendix 52

01 Electrical circuit diagram (540246045501) 52

02 Hydraulic circuit diagram (532246045503) 53

03 Easy worn parts list 54

Chapter 1: Drive system

01 Drive unit (540246013501)

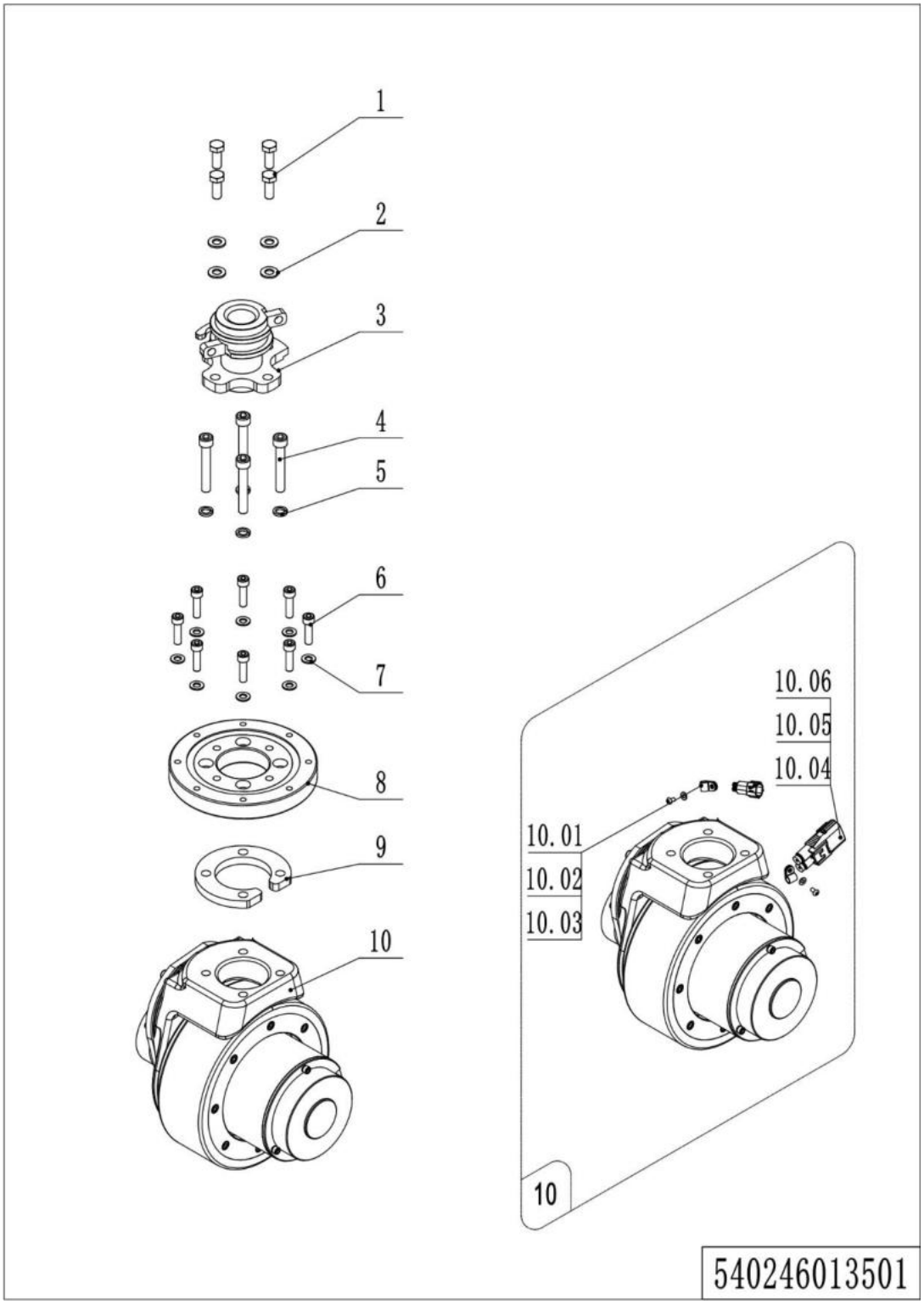

01 Drive unit (540246013501)

No.	Item Code	Mark	Item Description	Qty.	Substitute	Note
1	910100300036	1	Bolt	4		
2	910400100007	1	Flat Washer	4		
3	532231210005		Drive Shaft	1		
4	910200200079	1	Screw	4		
5	910400500007	1	Spring Washer	4		
6	910200200138	1	Screw	8		
7	910400100006	1	Flat Washer	8		
8	532213520001		Slewing Bearing	1		
9	532213520002		Plate	1		
10	508013510002		Drive Assembly (YX)	1		YX
10	508013510005		Drive Assembly (YX)	1		YX, Anti-skip wheel
10.01	910200700001	1	Screw	2		
10.02	910400100003	1	Flat Washer	2		
10.03	921300200001		Cable Clamp	2		
10.04	920400200169	1	Connector	1		
10.05	920400200171	1	Connector	2		
10.06	920400200172	1	Connector	2		

02 Drive Assembly (YX) (532246013002)

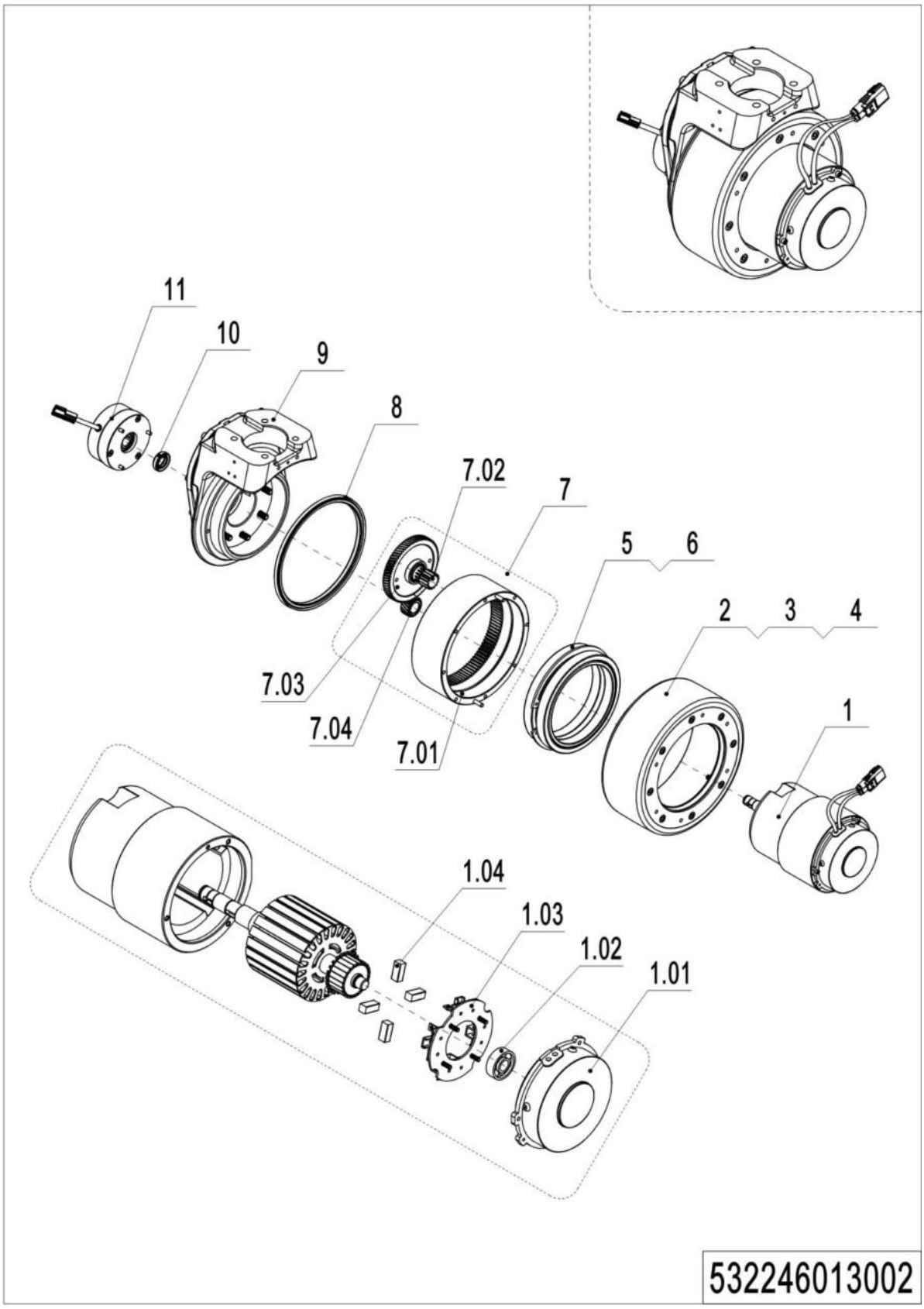

02 Drive Assembly (YX) (532246013002)

No.	Item Code	Mark	Item Description	Qty.	Substitute	Note
--	508013510002		Drive Assembly (YX)	1		YX
--	508013510005		Drive Assembly (YX)	1		YX, Anti-skip wheel
1	508098510158		Motor	1		Waterproof plug
1.01	507798520022		End Cap	1		
1.02	910700200016		Bearing	1		
1.03	507798520024		Carbon Brush Holder	1		
1.04	507798520023		Brush	4		
2	961004000009		Wheel	1		
2	961004200001		Wheel	1		Anti-skip wheel
3	961004000011		Oil seal	1		
4	910200200167		Screw	8		
5	910700200044		Bearing	2		
6	961004000007		Sleeve	1		
7	507798510006		Gear Components	1		
7.01	961004000006		Gear	1		
7.02	961004000003		Gear Shaft	1		
7.03	961004000002		Gear	1		
7.04	961004000005		Gear	1		
8	961004000010		Oil seal	1		
9	507798510007		Gearbox	1		
10	961000700012		Oil seal	1		
11	940700100015		Brake	1		STEKI

Chapter 2: Hydraulic system

01 Hydraulic unit (540246024501)

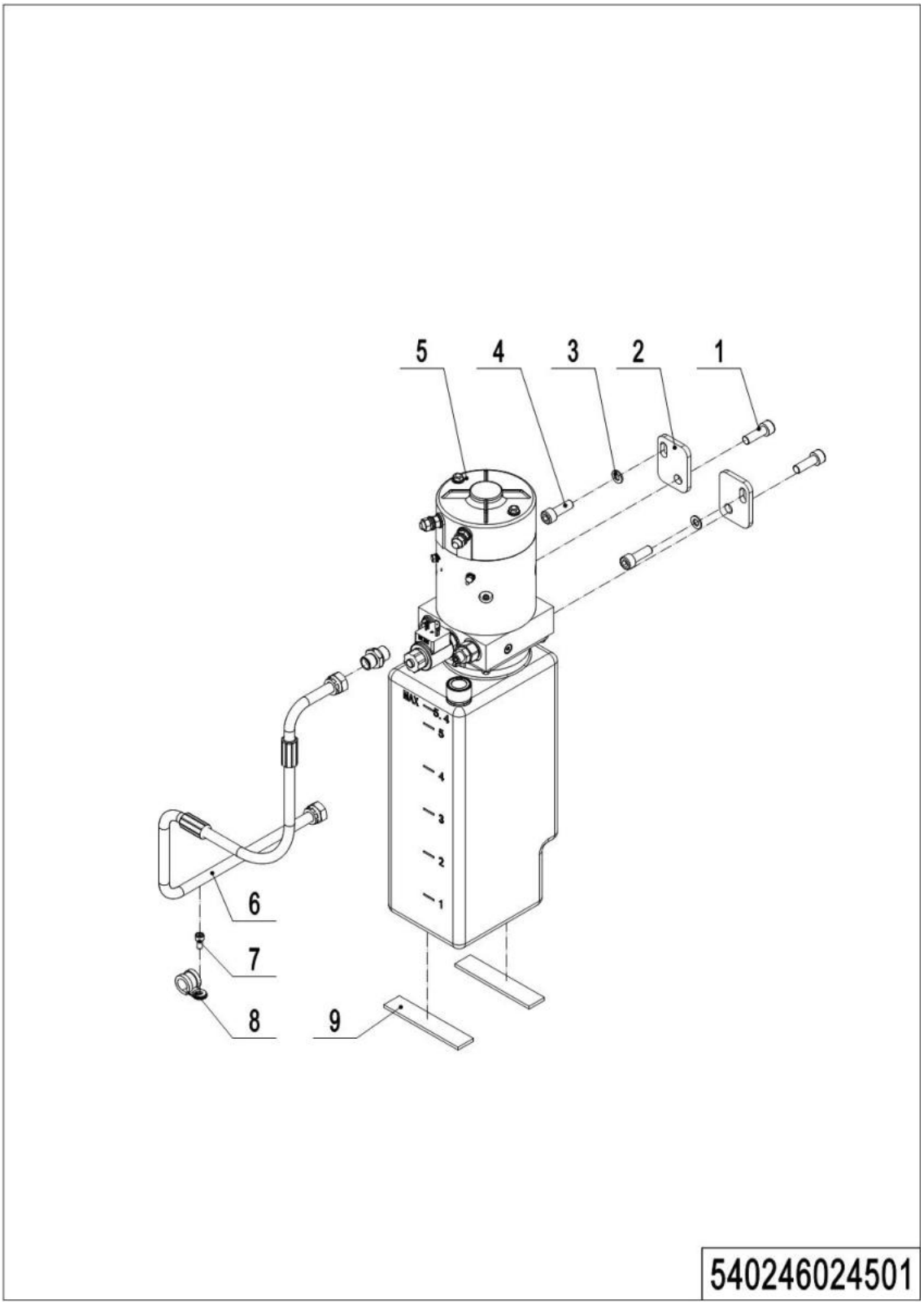

1=Supply as package; 2=Supply with limit; 3=Phasing out supply; 4=Supply as assembly; 5=Check other lists.

01 Hydraulic unit (540246024501)

No.	Item Code	Mark	Item Description	Qty.	Substitute	Note
1	910200200074	1	Screw	2		
2	532223520001		Plate	2		
3	910400100006	1	Flat Washer	2		
4	910200200053	1	Screw	2		
5	950900100158	5	Pump Unit	1		Check 540246023501
6	540224020001		Hose	1		
7	910200200033	1	Screw M6x12	1		
8	951000100003		Hose Clamp	2		
9	532223520010		Crash Pad	2		

02 Pump unit (YX) (540246023501)

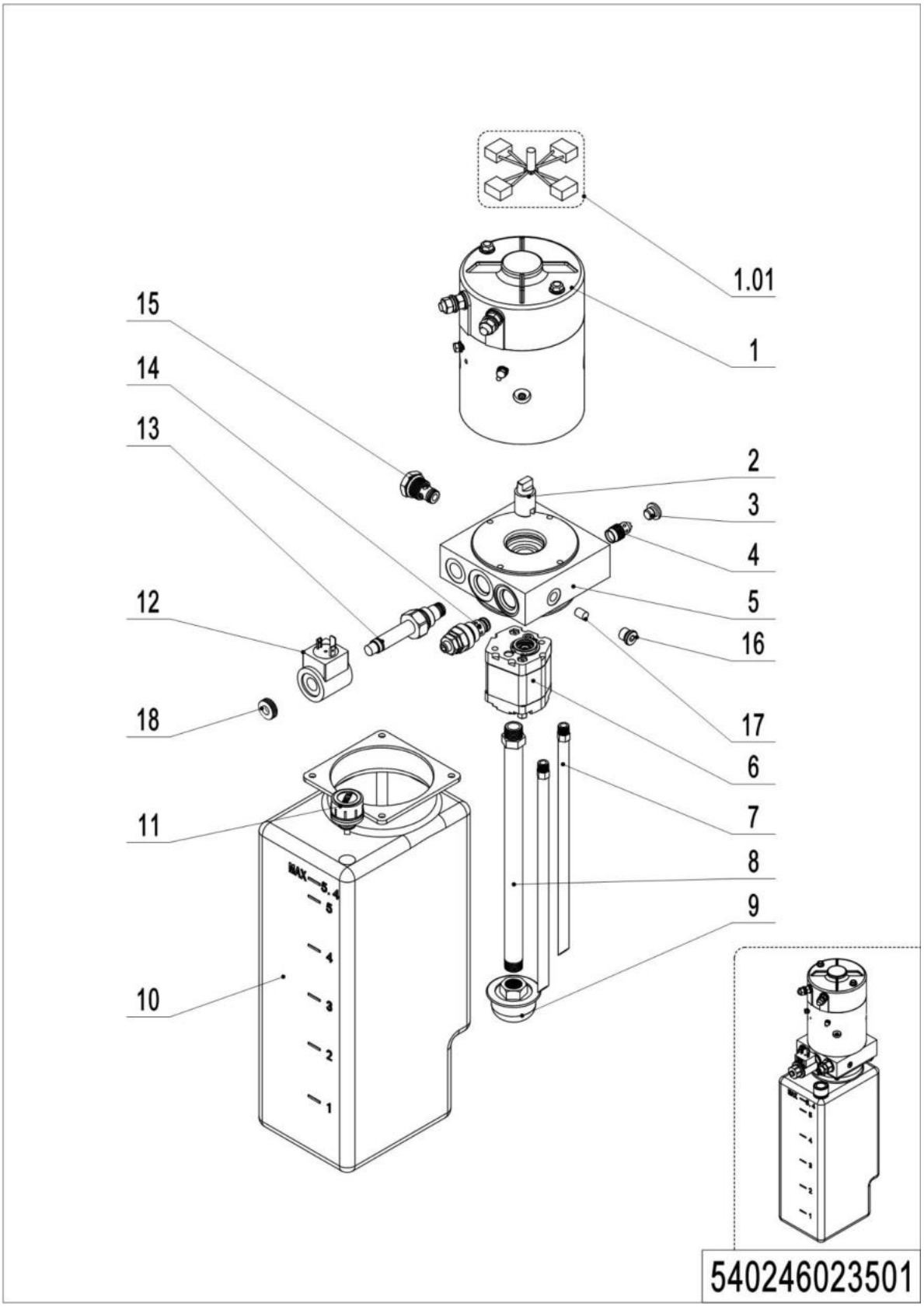

02 Pump unit (YX) (540246023501)

No.	Item Code	Mark	Item Description	Qty.	Substitute	Note
--	950900100158		Pump Unit	1		YX
1	920900100131		Motor	1		
1.01	532298510107		Carbon Brush	1		
2	950998500008		Coupling	1		
3	950998500005		End Cap	1		
4	950998500004		Valve	1		
5	950600600007		Valve Block	1		
6	950800200015		Gear pump	1		
7	950998500012		Pipe	2		
8	950998500011		Oil Tube	1		
9	950998500010		Filter	1		
10	951100100006		Tank	1		
11	951100200007		Cap-Tank	1		
12	532298510034		Coil	1		
13	950998500001		Magnetic Valve	1		
14	950998500014		Overflow valve	1		
15	950998500003		Check Valve	1		
16	950998500006		End Cap	1		
17	532298520018		Throttle screw	1		
18	532298520011		Nut	1		

Chapter 3: Truck structure

01 Truck frame (540246021501)

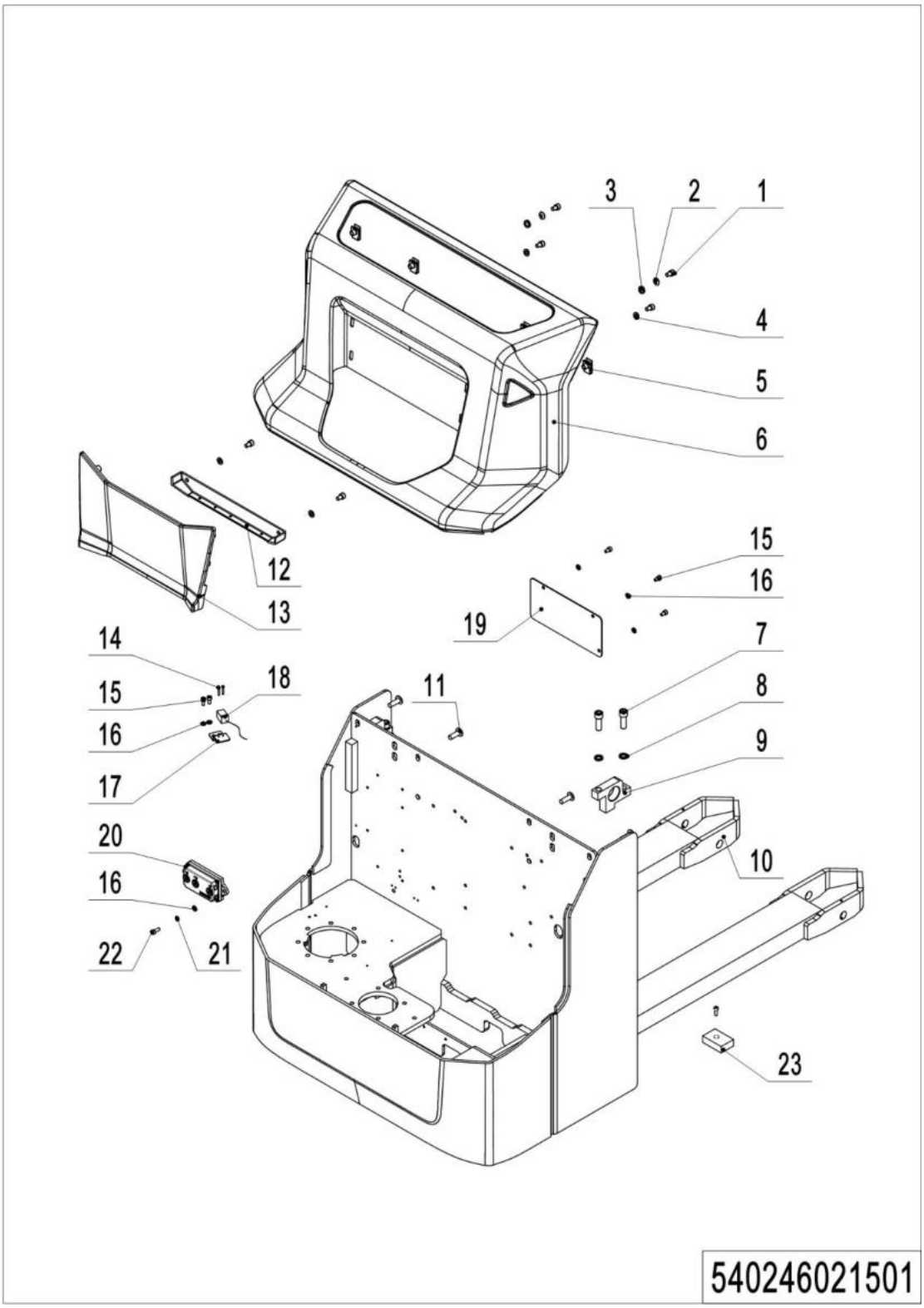

01 Truck frame (540246021501)

No.	Item Code	Mark	Item Description	Qty.	Substitute	Note
1	910200200053	1	Screw	6		
2	910400600004	1	Spherical Washer	2		
3	910400700004	1	Cone Washer	2		
4	910400100006	1	Flat Washer	4		
5	940400400003		Cage Nut	4		
6	532221510003		Cover	1		
7	910200200099	1	Screw	4		
8	910400500008	1	Spring Washer	4		
9	532221520020		Mounting Plate	2		
10	532221510004	2	Chassis(570x1150)	1		570x1150
10	532221510005	2	Chassis(685x1150)	1		685x1150
11	941100100004	1	Screw	4		
12	532221520025		Cover	1		
13	532221520024		Panel	1		
14	910200500015	1	Screw	2		
15	910200200033	1	Screw	5		
16	910400100005	1	Flat Washer	7		
17	532231220021		Mounting Plate	1		
18	920200400029		Proximity Switch	1		
19	532221520030		Plate	1		
20	920700100031		Contactors	1		
21	910400500005		Washer 6	2		
22	910200200035		Screw M6x16	4		
23	534721520024		Crash Pad	2		

02 Forks (540246038004)

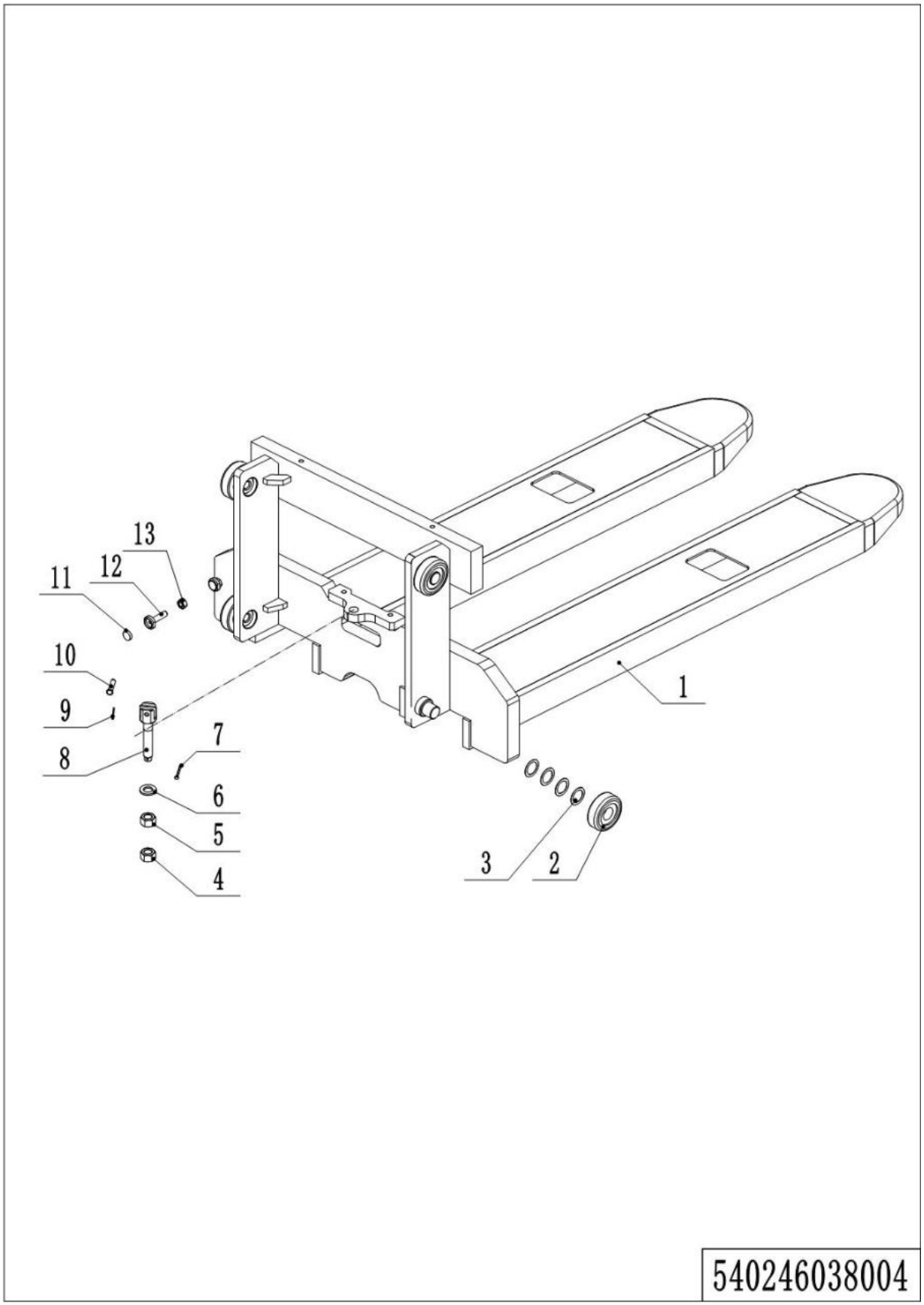

1=Supply as package; 2=Supply with limit; 3=Phasing out supply; 4=Supply as assembly; 5=Check other lists.

02 Forks (540246038004)

No.	Item Code	Mark	Item Description	Qty.	Substitute	Note
1	540238010004		Fork	1		570x1150
2	940200100038		Roller	4		
3	940600500016		Washer	24		on demand
4	910300200008		Nut	1		
5	910300400006		Nut	1		
6	910400100010		Washer	1		
7	910600600034		Pin	1		
8	533243520008		Screw	1		
9	910600600015		Pin	1		
10	941100800007		Pin shaft	1		
11	940600100001		Magnet	1		
12	940600200002		Magnetic steel base	1		
13	910300100007		Nut	1		

03 Battery holder (540246012501)

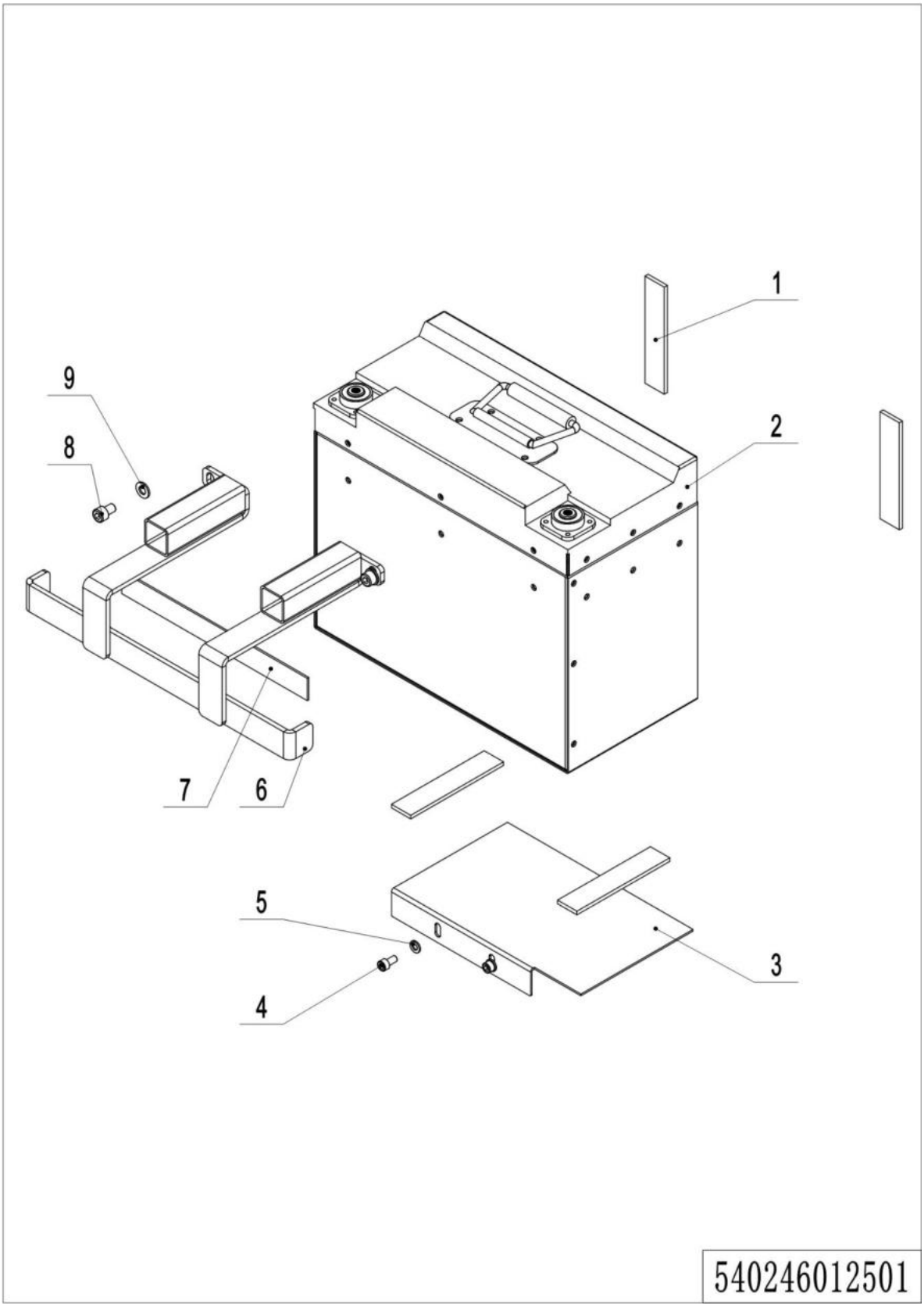

03 Battery holder (540246012501)

No.	Item Code	Mark	Item Description	Qty.	Substitute	Note
1	532223520010		Crash Pad	4		
2	920600100445		Li Battery24V100Ah	1		FORDEARY
3	532212520006		Mounting Plate	1		
4	910200200033	1	Screw	2		
5	910400100005	1	Flat Washer	2		
6	532212510003		Mounting Plate	1		
7	532233020005		Crash Pad	1		
8	910200200053	1	Screw	2		
9	910400100006	1	Flat Washer	2		

04 Control panel assembly (20CE) (540246010001)

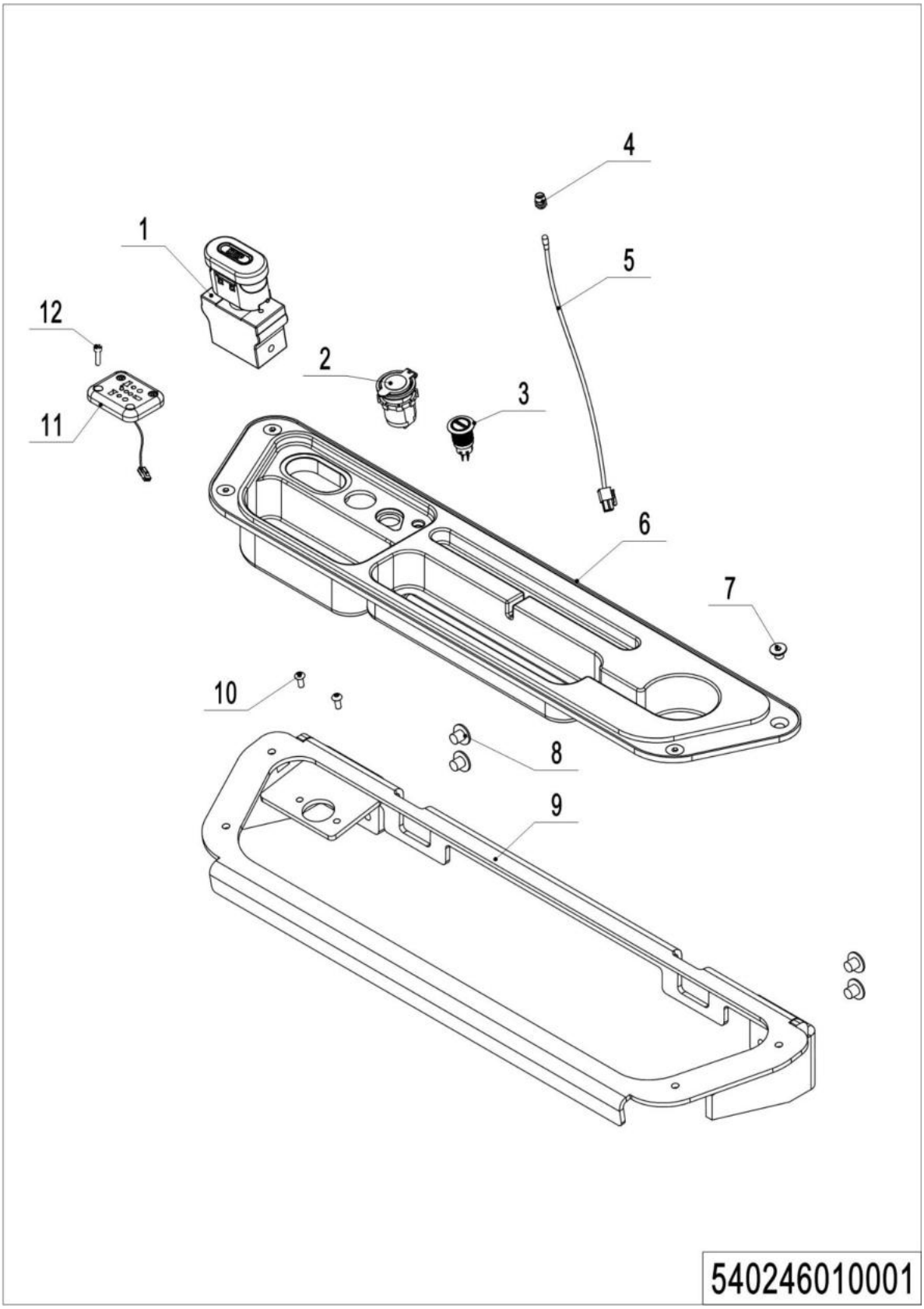

1=Supply as package; 2=Supply with limit; 3=Phasing out supply; 4=Supply as assembly; 5=Check other lists.

04 Control panel assembly (20CE) (540246010001)

No.	Item Code	Mark	Item Description	Qty.	Substitute	Note
1	920200100032		Emergency Button	1		
2	921000200859		USB interface	1		
3	532233010023		Button	1		
4	922000100024		Lamp Holder	1		
5	532298510006		Indicator Light	1		
6	532210020009		Bezel	1		
7	910200400023	1	Screw	4		
8	941100100005		Screw	4		
9	532210010001		Mounting Plate	1		
10	910200300012	1	Screw	2		
11	920400300024		Socket	1		
12	910200200015	1	Screw	3		

05 Control panel assembly (540246010002)

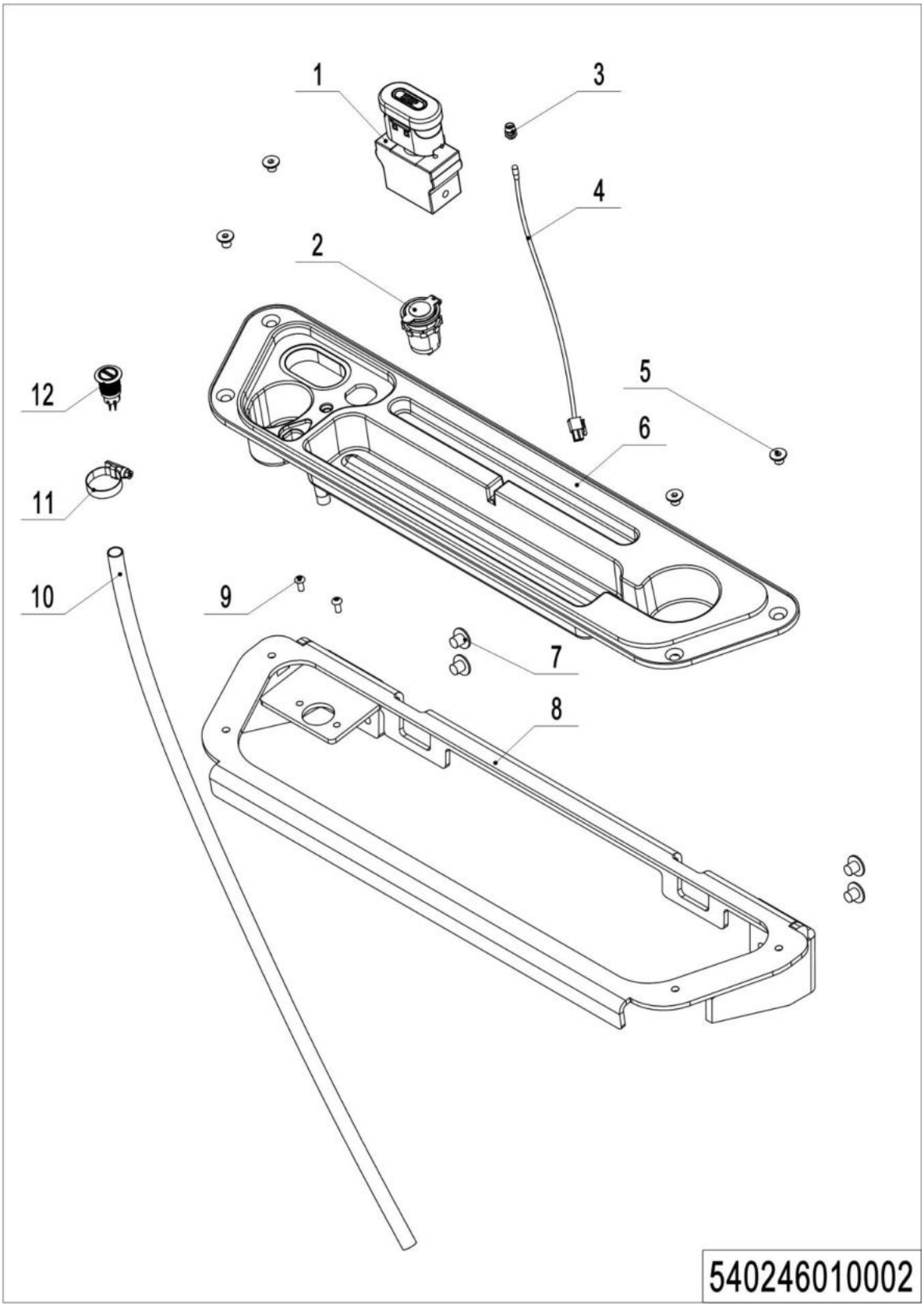

1=Supply as package; 2=Supply with limit; 3=Phasing out supply; 4=Supply as assembly; 5=Check other lists.

05 Control panel assembly (540246010002)

No.	Item Code	Mark	Item Description	Qty.	Substitute	Note
1	920200100032		Emergency Button	1		
2	921000200859		USB interface	1		
3	922000100024		Lamp Holder	1		
4	532298510006		Indicator Light	1		
5	910200400023	1	Screw	4		
6	532210020001		Bezel	1		
7	941100100005		Screw	4		
8	532210010001		Mounting Plate	1		
9	910200300012	1	Screw	2		
10	532210020008		Pipe	1		
11	911000600008		Hose Clamp	1		
12	532233010023		Button	1		

Chapter 4: Steering system, braking system and wheels

01 Tiller (540246011000)

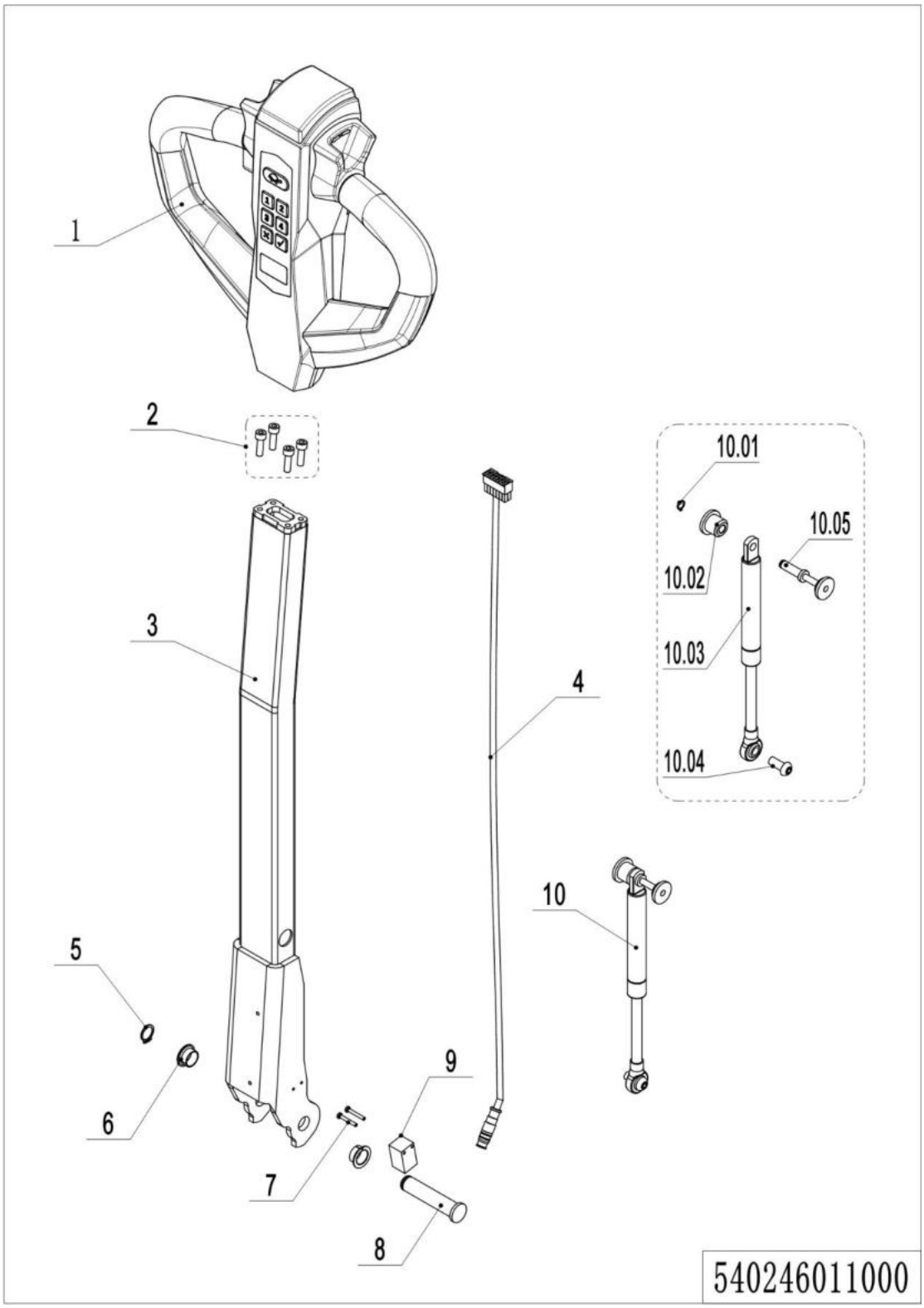

01 Tiller (540246011000)

No.	Item Code	Mark	Item Description	Qty.	Substitute	Note
1	922100100173		Tiller	1		
2	910200200036	1	Screw	4		
3	532211010000		Tiller	1		
4	532233010019		Wire Harness	1		
4	532233010041		Wire Harness	1		
5	910401300006		Circlip	1		
6	940500200001		Bushing	2		
7	941101100001	1	Screw	2		
8	508011020004		Pin	1		
9	505633510001		Proximity Switch	1		
10	532298510039		Air spring kits	1		
10.1	910401300001		Circlip	1		
10.2	508011020005		Fixing Base	1		
10.3	532211020003		Gas Spring	1		
10.4	941100100011	1	Screw	1		
10.5	508011010002		Pin	1		

02 Tiller head (SHIJIA) (540246011001)

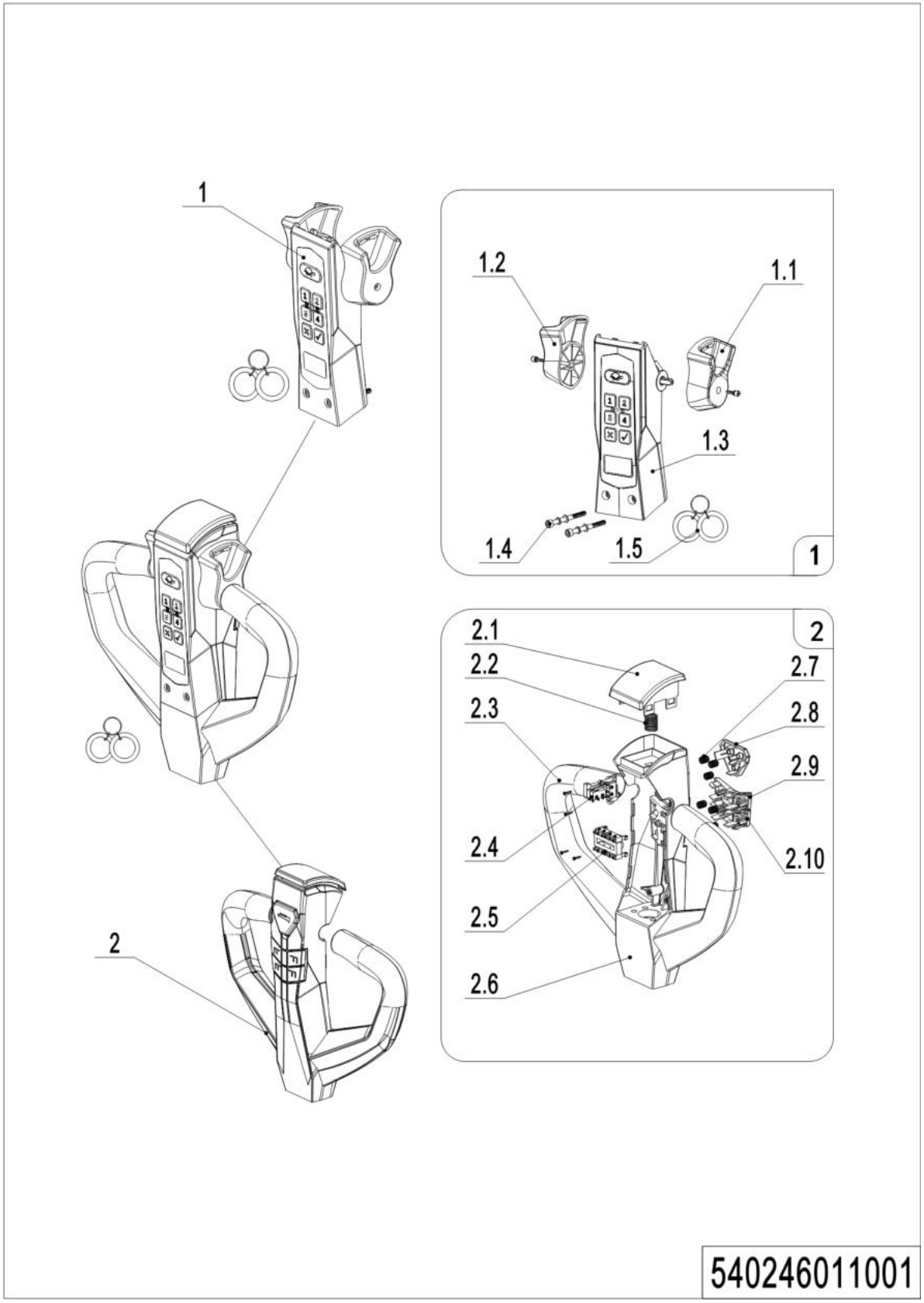

02 Tiller head (532246011002）

No.	Item Code	Mark	Item Description	Qty.	Substitute	Note
1	540298510000		Accelerator	1		
1.1	532298520020		Traction lever A	1		
1.2	532298520021		Traction lever B	1		
1.3	540298520000		Circuit board assembly	1		
1.4	509998520065		Screw	2		
1.5	532298520023		ID card	1		
2	540298510001		Handle body assembly	1		
2.1	540298520001		Belly switch button	1		
2.2	509998520071		spring	1		
2.3	509998520070		Screw	5		
2.4	540298520002		Belly & horn switch wiring harness assembly	1		
2.5	502598520002		Lift & lower switch harness assembly	1		
2.6	540298520003		Handle body	1		
2.7	509998520029		spring	7		
2.8	540298520004		Horn switch button	1		
2.9	540298520005		Lift switch button	1		
2.10	540298520006		Down switch button	1		

03 Load wheel (532246017001)

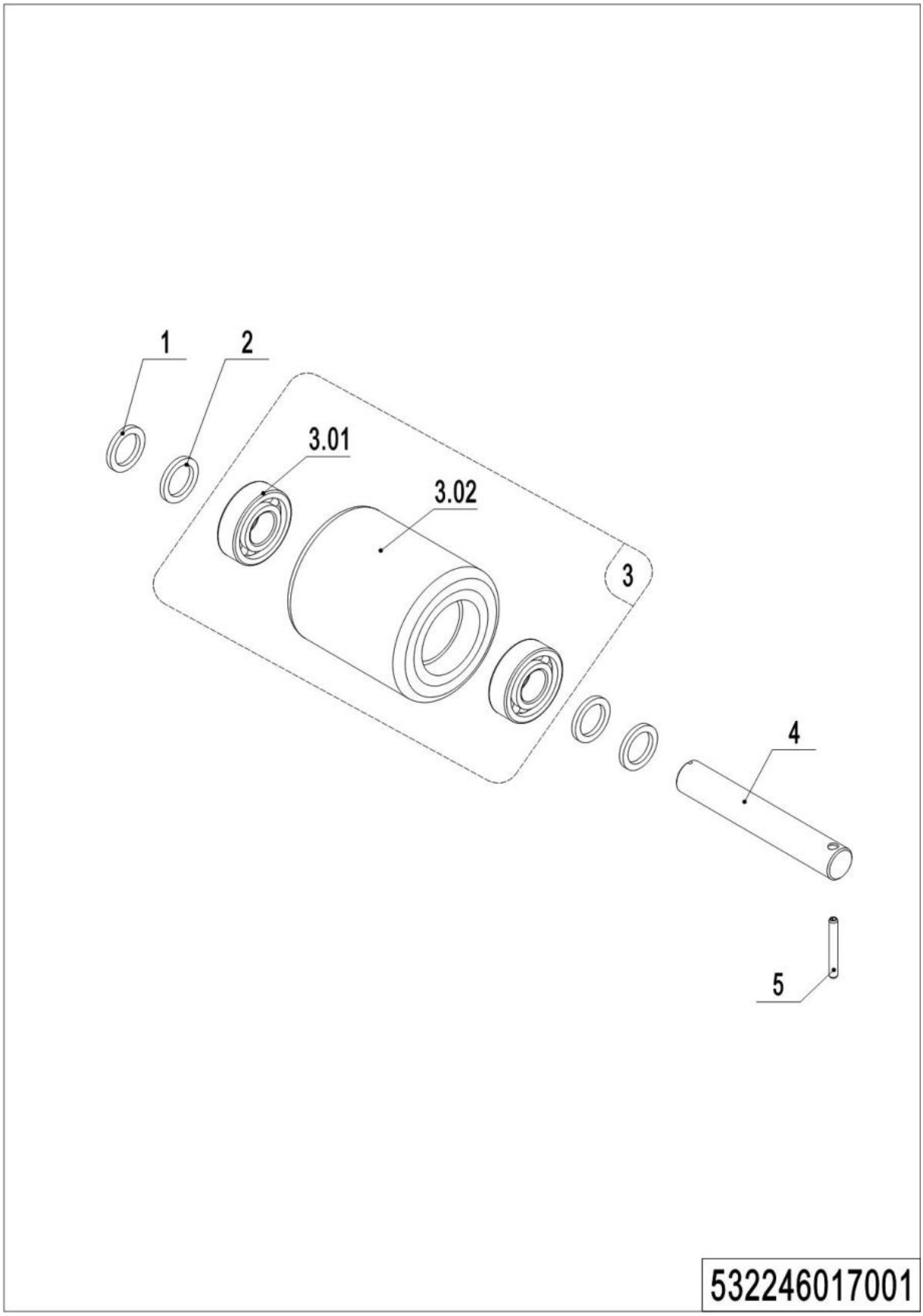

1=Supply as package; 2=Supply with limit; 3=Phasing out supply; 4=Supply as assembly; 5=Check other lists.

03 Load wheel (532246017001)

No.	Item Code	Mark	Item Description	Qty.	Substitute	Note
1	940600500013		Washer	4		
2	940600500053		Washer	4		
3	532298510003		Load Roller Accessories	2		
3.01	910700200019		Bearing	4		
3.02	940300300011		WheelΦ84x93	2		
4	532217020001		Axle	2		
5	910600400028		Spring Pin	2		

04 Side wheel (532246016501)

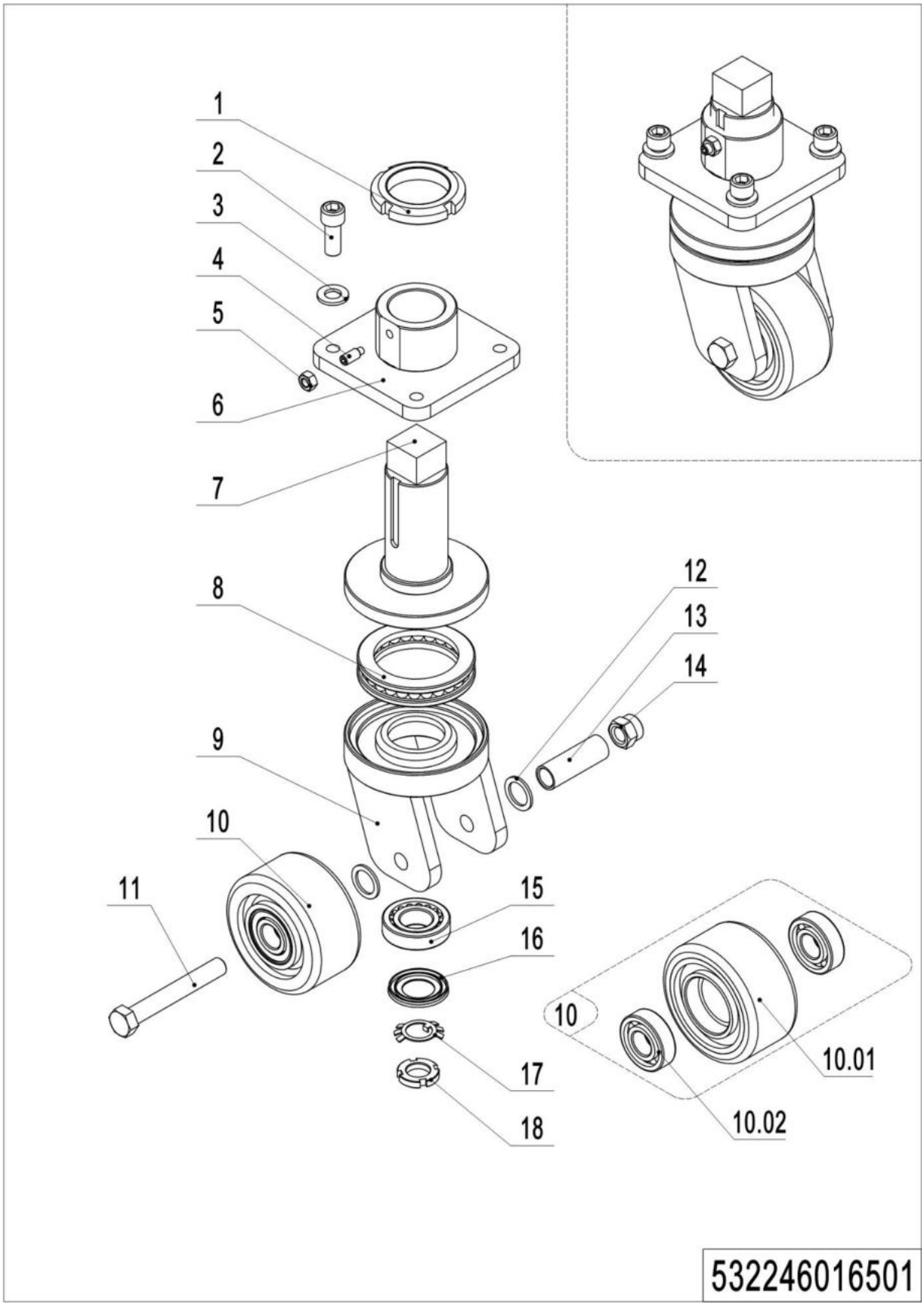

04 Side wheel (532246016501)

No.	Item Code	Mark	Item Description	Qty.	Substitute	Note
--	532298510041		Caster Assembly	1		
1	941100900004	1	Nut	1		
2	910200200098	1	Screw	4		
3	910400100008	1	Flat Washer	4		
4	910201000012	1	Screw	1		
5	910300100006	1	Nut	1		
6	532216510003	2	Fixing Base	1		
7	532216510002	2	Axle	1		
8	910700700011		Bearing	1		
9	532216510001	2	Wheel Carrier	1		
10	532298510004		Caster Assembly	1		
10.01	940300300030		WheelΦ100x50	1		
10.02	910700200019		Bearing	2		
11	910100100069	1	Bolt	1		
12	940600500005	1	Washer	4		
13	532216520006		Sleeve	1		
14	910300500007	1	Nut	1		
15	910700600001		Bearing	1		
16	941101000010		Cover	1		
17	910400900002	1	Lock Washer	1		
18	910300700008	1	Nut	1		

05 Manual steering (532246031201)

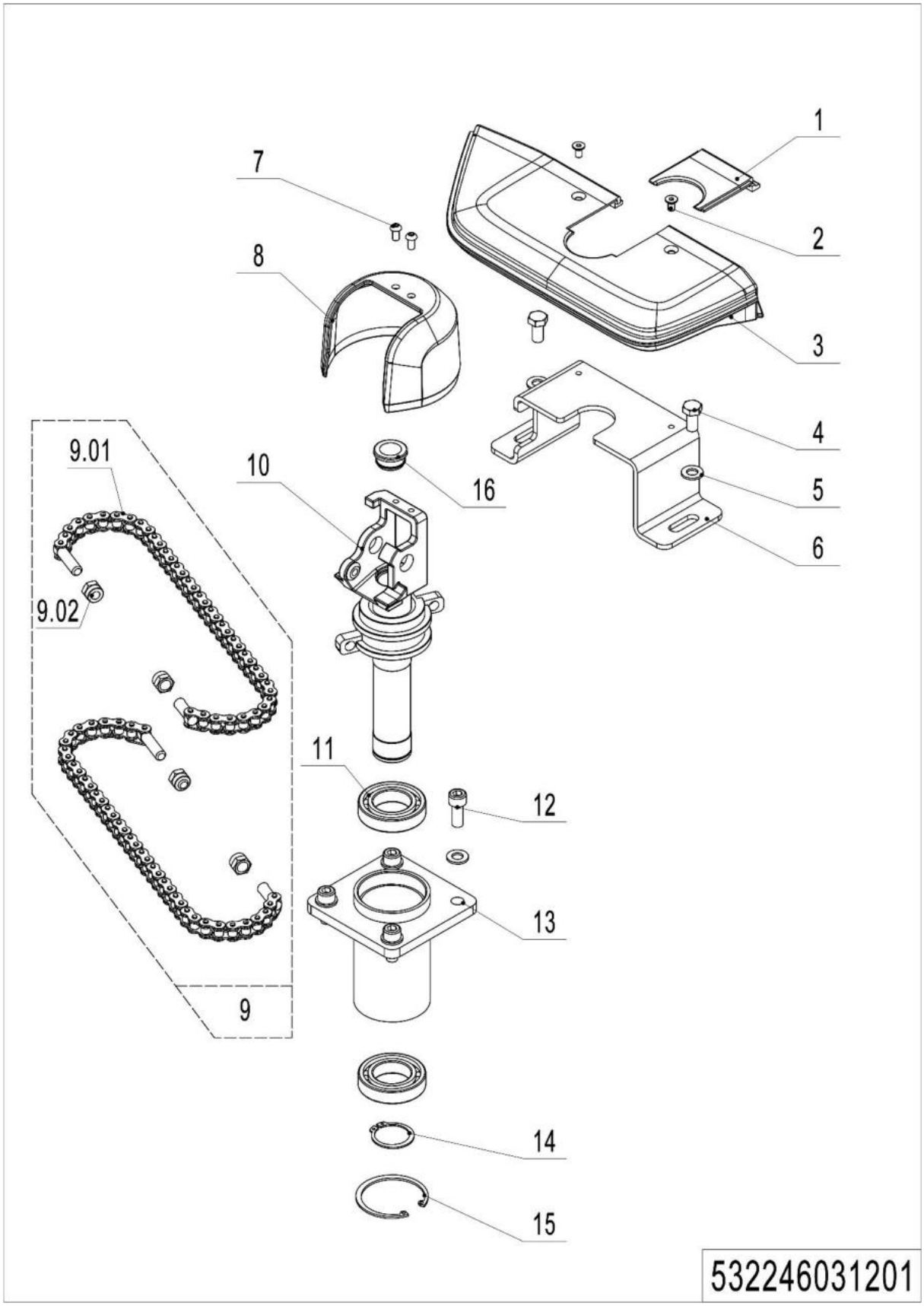

05 Manual steering (532246031201)

No.	Item Code	Mark	Item Description	Qty.	Substitute	Note
1	532231220011		Handle Cap	1		
2	910200400016	1	Screw	2		
3	532231220010		Handle Cap	1		
4	910100300036	1	Bolt	2		
5	910400100007	1	Flat Washer	6		
6	532231220008		Pedestal	1		
7	910200300017	1	Screw	2		
8	532211020001		Protective Cover	1		
9	532298510071		Chain assembly	2		
9.01	532231210009		Chain component	2		
9.02	910300500005		Nut	4		
10	532231210006		handle Spindle	1		
11	910700200007		Bearing	2		
12	910200200076	1	Screw	4		
13	532231210003		Bracket	1		
14	910401300018	1	Circlip	1		
15	910401400018	1	Circlip	1		
16	532231220023		Jacket	1		

Chapter 5: Mast system

01 Three stage mast Free Lift (540246044501)

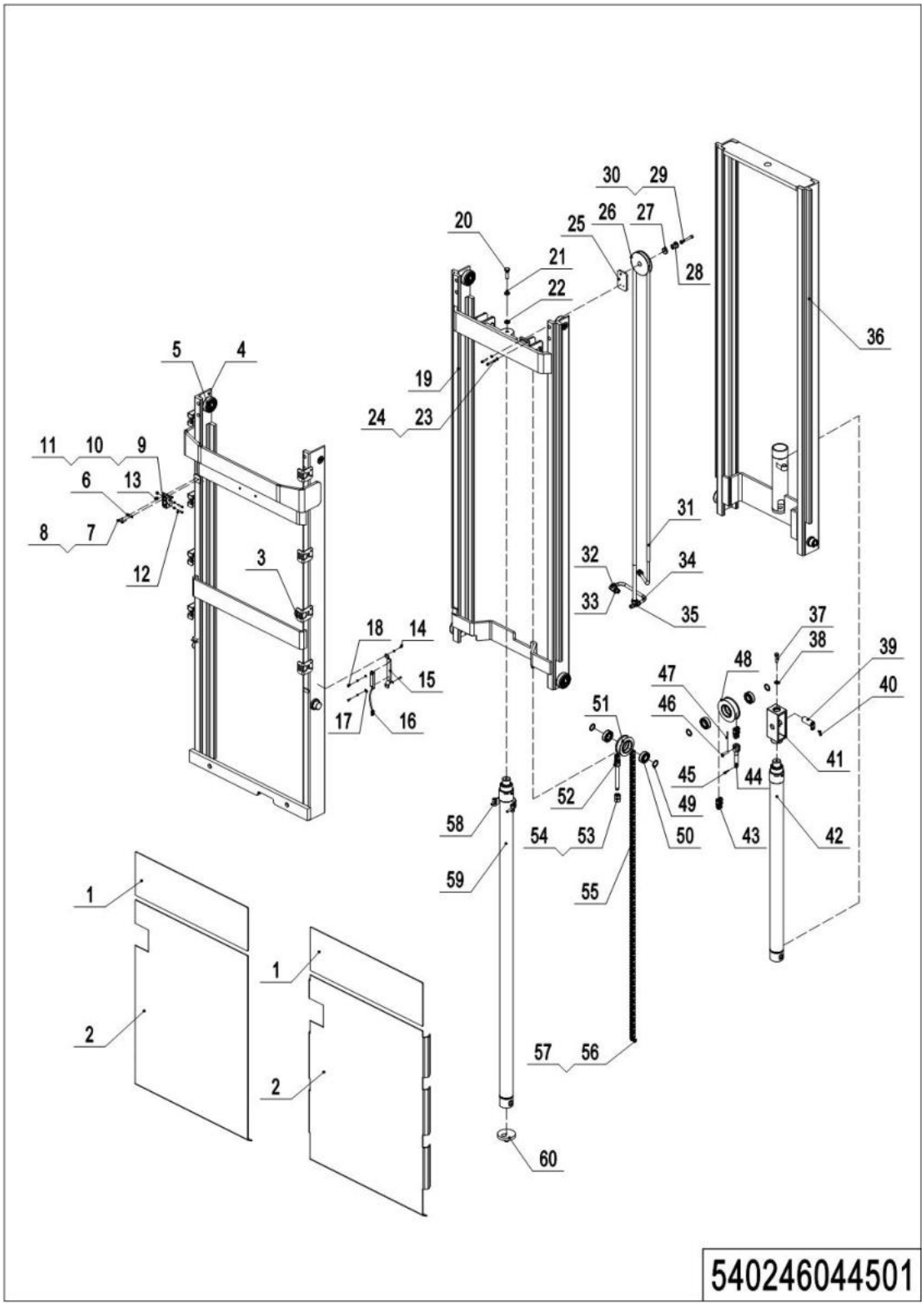

01 Three stage mast Free Lift (540246044501)

No.	Item Code	Mark	Item Description	Qty.	Substitute	Note
1	540244520027		Guard Plate	1		
2	540244520026		Guard Plate	1		
2	540251520003		Guard Plate	1		Bending
3	940400300001		Buckle	8		
4	540244510001		Outer Mast	1		
5	940200300003		Compound Roller	12		
6	910200200033		Screw M6x12	4		
7	910400500005		Spring Washer	2		
8	910400100005		Flat Washer	2		
9	920200300003		Microswitch	1		
10	920200300007		Guard Cover	1		
11	540244520028		Mounting Plate	1		
12	910200200152		Screw M4x35	2		
13	910300500001		Nut M4	2		
14	910200200013		Screw M4x10	2		
15	534744520080		Guard Cover	1		
16	540333510021	1	Magnetic Switch	2		
17	910400500003		Spring Washer	2		
18	910200500020		Screw M4x6	2		
19	540244510002		Middle Mast	1		
20	910200200100		Screw M12x40	1		
21	910400500008		Spring Washer	1		
22	910400100008		Flat Washer	1		
23	910200200024		Screw M5x20	2		
24	910400100004		Flat Washer	2		
25	563044520027		Mounting Plate	1		
26	532643520132		Pulley	1		
27	563044520035		Plate	1		
28	563044520036		Bushing	1		
29	910400100006		Flat Washer	1		

01 Three stage mast Free Lift (540246044501) continuation

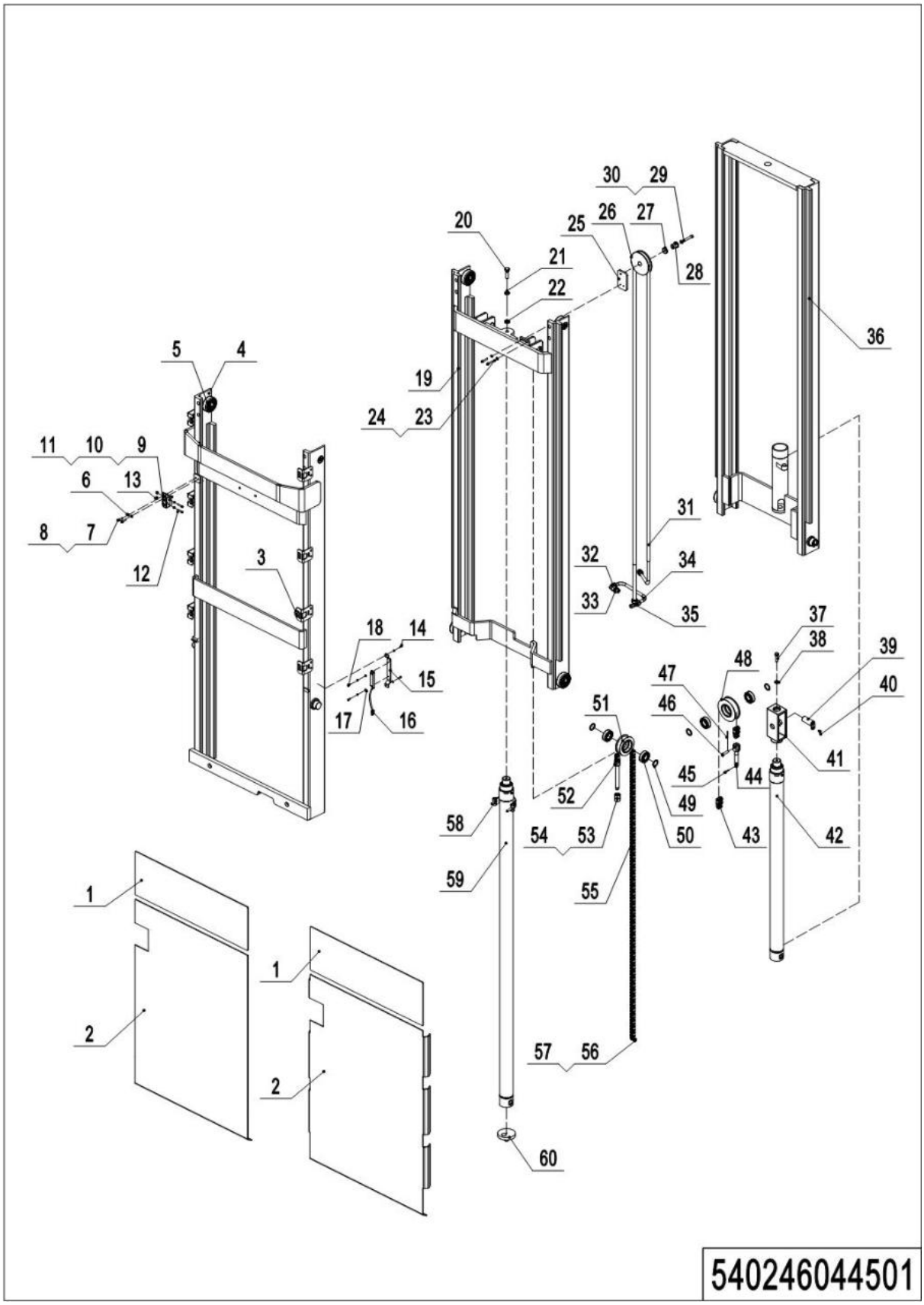

01 Three stage mast Free Lift (540246044501) continuation

No.	Item Code	Mark	Item Description	Qty.	Substitute	Note
30	910200200063		Screw M8x50	1		
31	540224520001		Hose	1		
32	950400200003		Joint	1		
33	950400400003		Joint	2		
34	540224520002		Steel Tube	1		
35	950400700002		Joint	1		
36	540244510003		Inner Mast	1		
37	910100300049		Bolt M12x25	1		
38	910400500008		Spring Washer	1		
39	533243510005		Pin	3		
40	910200400016		Screw M6x12	3		
41	540244520022		Yoke	1		
42	540244510004		Cylinder	1		
43	540244520024		Chain	1		
44	533243520008		Chain Bolt	1		
45	910600600034		Cotter Pin	3		
46	941100800007		Pin	3		
47	910600600015		Cotter Pin	3		
48	940200400002		Sprocket	1		
49	940600500006		Washer	6		
50	910700200020		Bearing	6		
51	94020040001		Sprocket	2		
52	271544020107		Chain Bolt	2		
53	910300400006		Nut 16	2		
54	910300200008		Nut 16	2		
55	540244520031		Chain	2		
56	910600700017		Pin	2		
57	910600600030		Cotter Pin	2		
58	940800600004		Hug Hoop Components	1		
59	540244510005		Cylinder	1		

01 Three stage mast Free Lift (540246044501) continuation

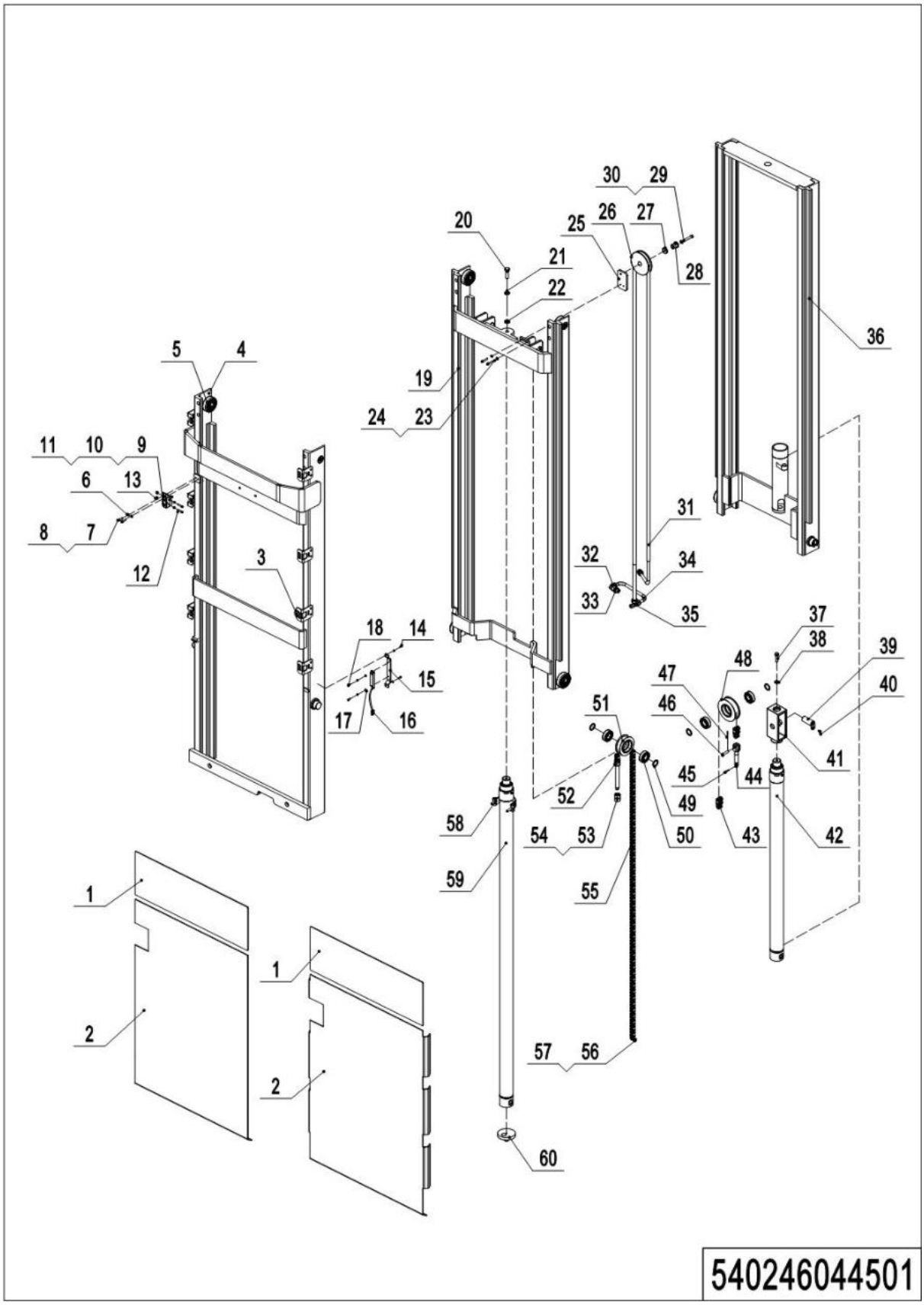

01 Three stage mast Free Lift (540246044501) continuation

No.	Item Code	Mark	Item Description	Qty.	Substitute	Note
60	540244510007		Pedestal	1		

Chapter 6: Electrical parts and wire harness

01 Wire harness (540246033001)

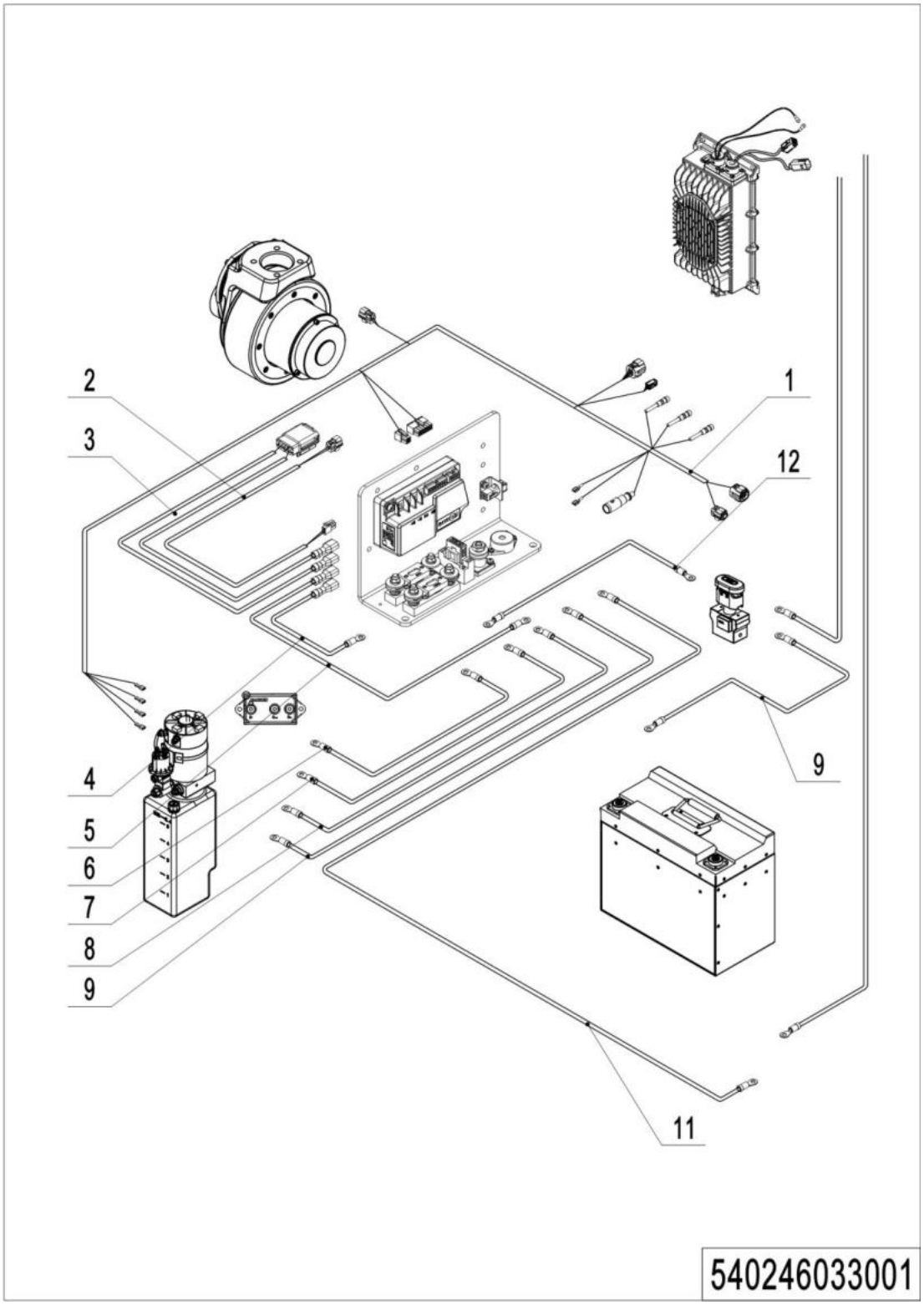

01 Wire harness (540246033001)

No.	Item Code	Mark	Item Description	Qty.	Substitute	Note
1	540233010001		Cables	1		
2	532233010035		Cables	1		
3	532233010036		Cables	1		
4	532233010037		Cables	1		
5	532233010038		Cables	1		
6	540233010003		Cables	1		
7	540233010002		Cables	1		
8	540233010004		Cables	1		
9	532233010009		Cables	1		
10	532233010020		Cables	1		
11	532233010021		Cables	1		
12	532233010016		Cables	1		

02 Electrical control unit (5402246033002)

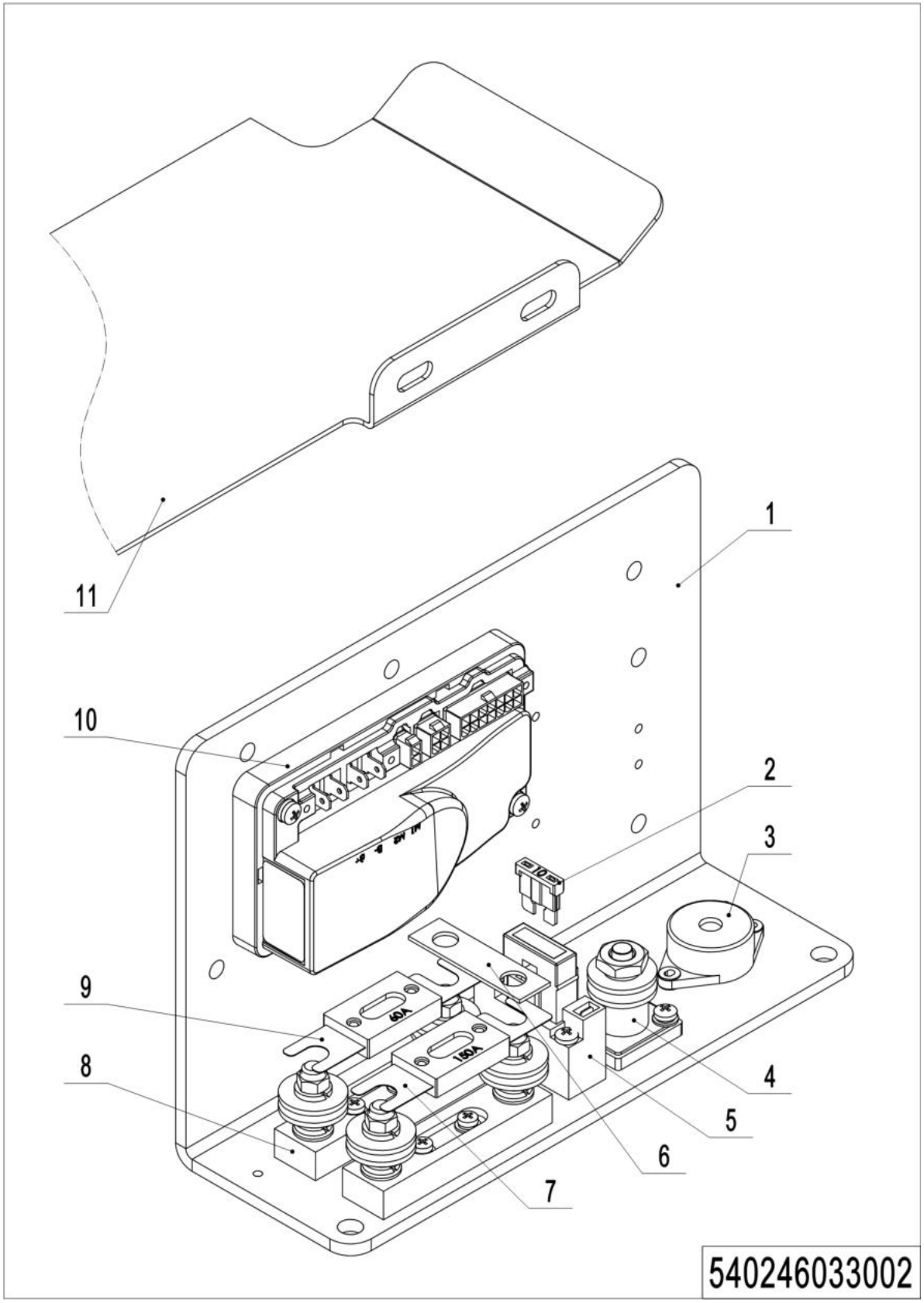

1=Supply as package; 2=Supply with limit; 3=Phasing out supply; 4=Supply as assembly; 5=Check other lists.

02 Electrical control unit (5402246033002)

No.	Item Code	Mark	Item Description	Qty.	Substitute	Note
1	532233020001		Mounting Plate	1		
2	920100200002		Fuse	1		10A
3	920500100007		Horn	1		
4	920100400001		Fuse Holder	1		
5	920100400006		Fuse Holder	1		
6	505633020003		Copper Busbar	1		
7	920100100007		Fuse	1		150A
8	920100400002		Fuse Holder	2		
9	920100100003		Fuse	1		60A
10	532233010047		Controller	1		
11	532221520027		Baffle	1		

03 Charger (540246036501)

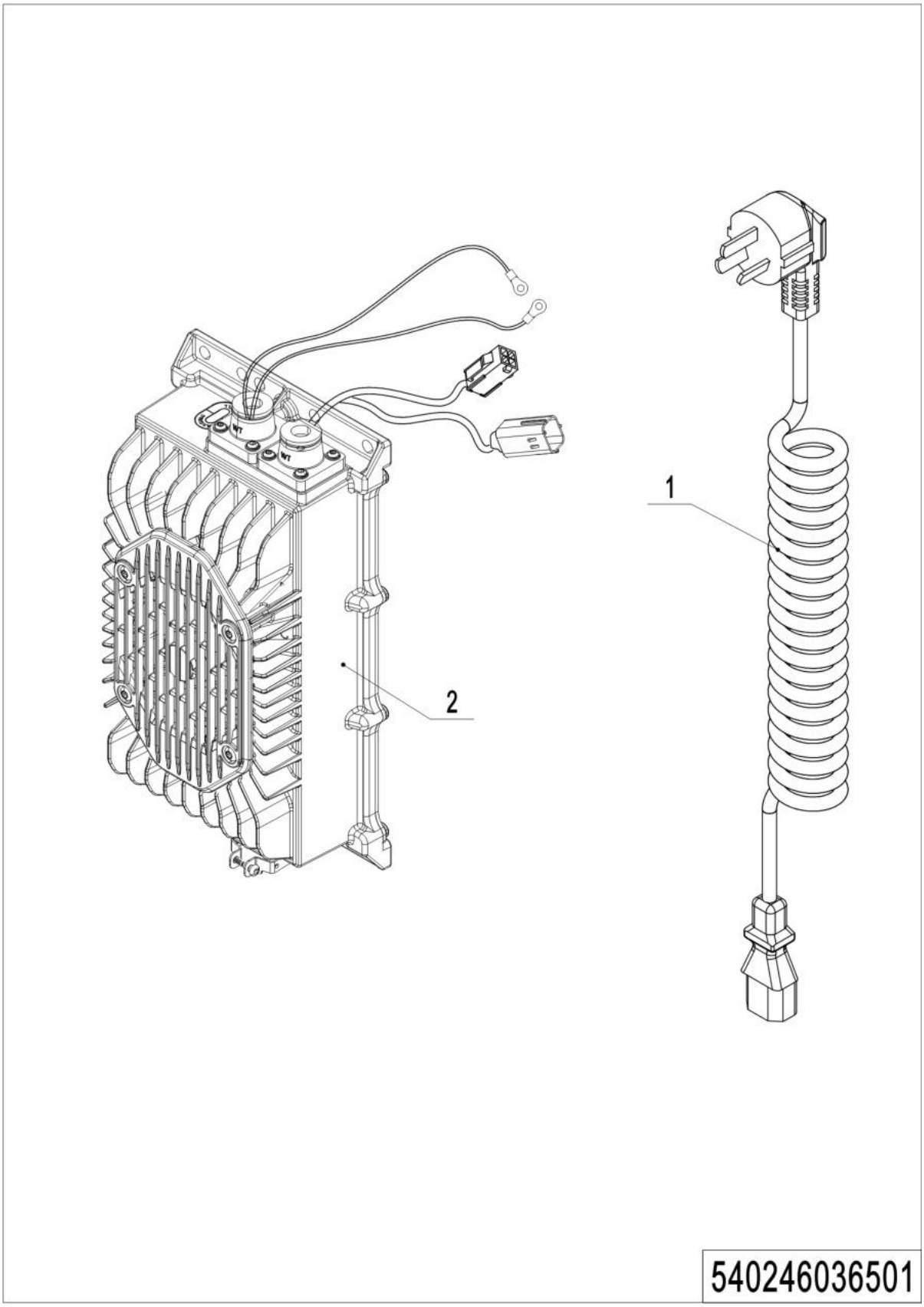

1=Supply as package; 2=Supply with limit; 3=Phasing out supply; 4=Supply as assembly; 5=Check other lists.

03 Charger (540246036501)

No.	Item Code	Mark	Item Description	Qty.	Substitute	Note
1	921500200008		Spring Cable (Asia)	1		
1	921500200005		Spring Cable (EU)	1		
1	921500200004		Spring Cable (ENG)	1		
1	921500200078		Spring Cable (USA)	1		
1	921500200006		Spring Cable (ITY)	1		
1	921500200007		Spring Cable (SWD)	1		
1	921500200029		Spring Cable (ISR)	1		
1	921500200065		Spring Cable (ZA)	1		
1	921500200066		Spring Cable (IND)	1		
2	921000100105		Charger 24V25A	1		

Chapter 7: Special equipment

01 Load backrest (532246040501)

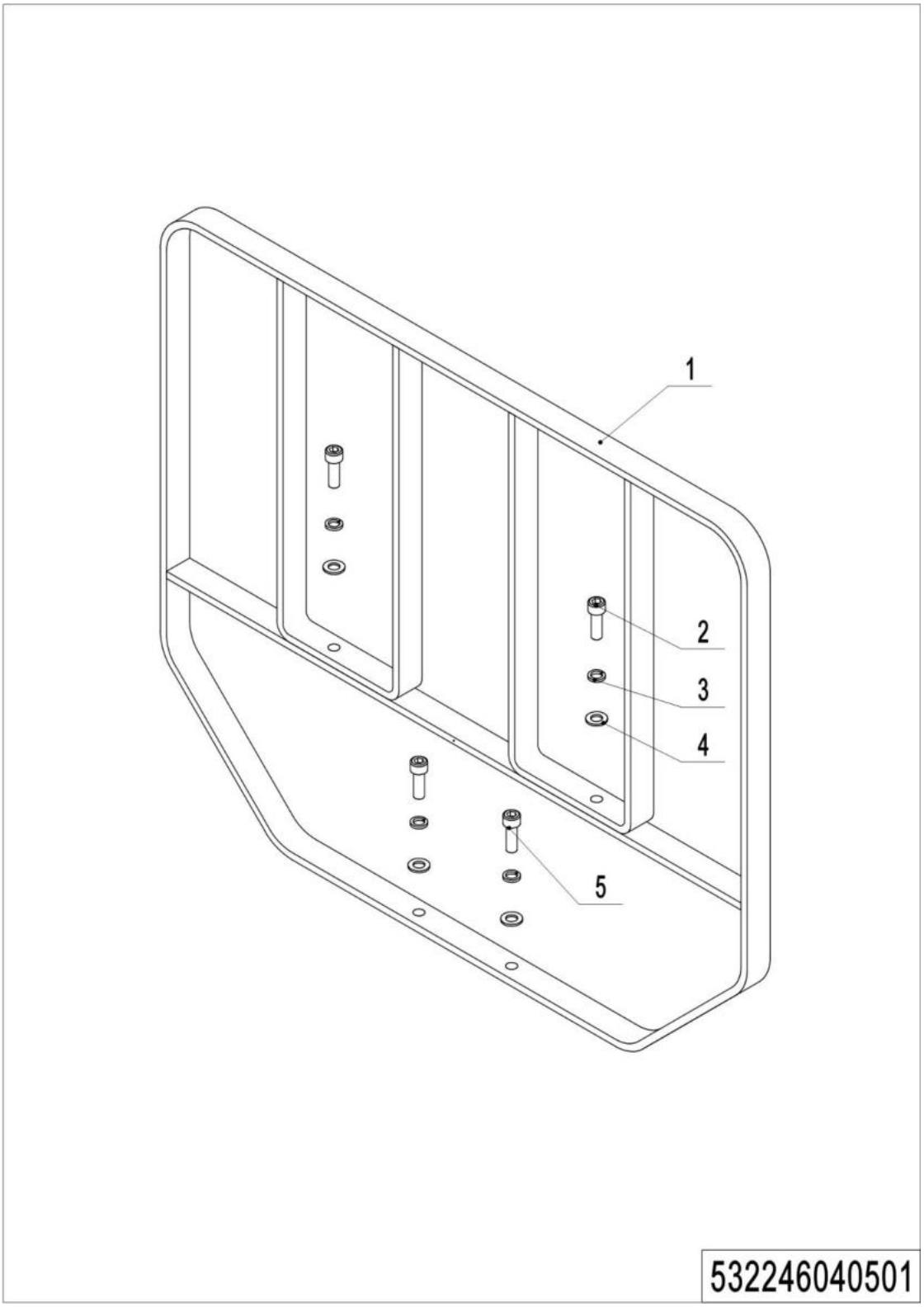

1=Supply as package; 2=Supply with limit; 3=Phasing out supply; 4=Supply as assembly; 5=Check other lists.

01 Load backrest (532246040501)

No.	Item Code	Mark	Item Description	Qty.	Substitute	Note
1	532640510001	2	Load Backrest	1		
2	910200200077	1	Screw	2		
3	910400500007	1	Spring Washer	4		
4	910400100007	1	Flat Washer	4		
5	910200200076	1	Screw	2		

Chapter 8: Others

01 Labels and decals (EU) (540246047001)

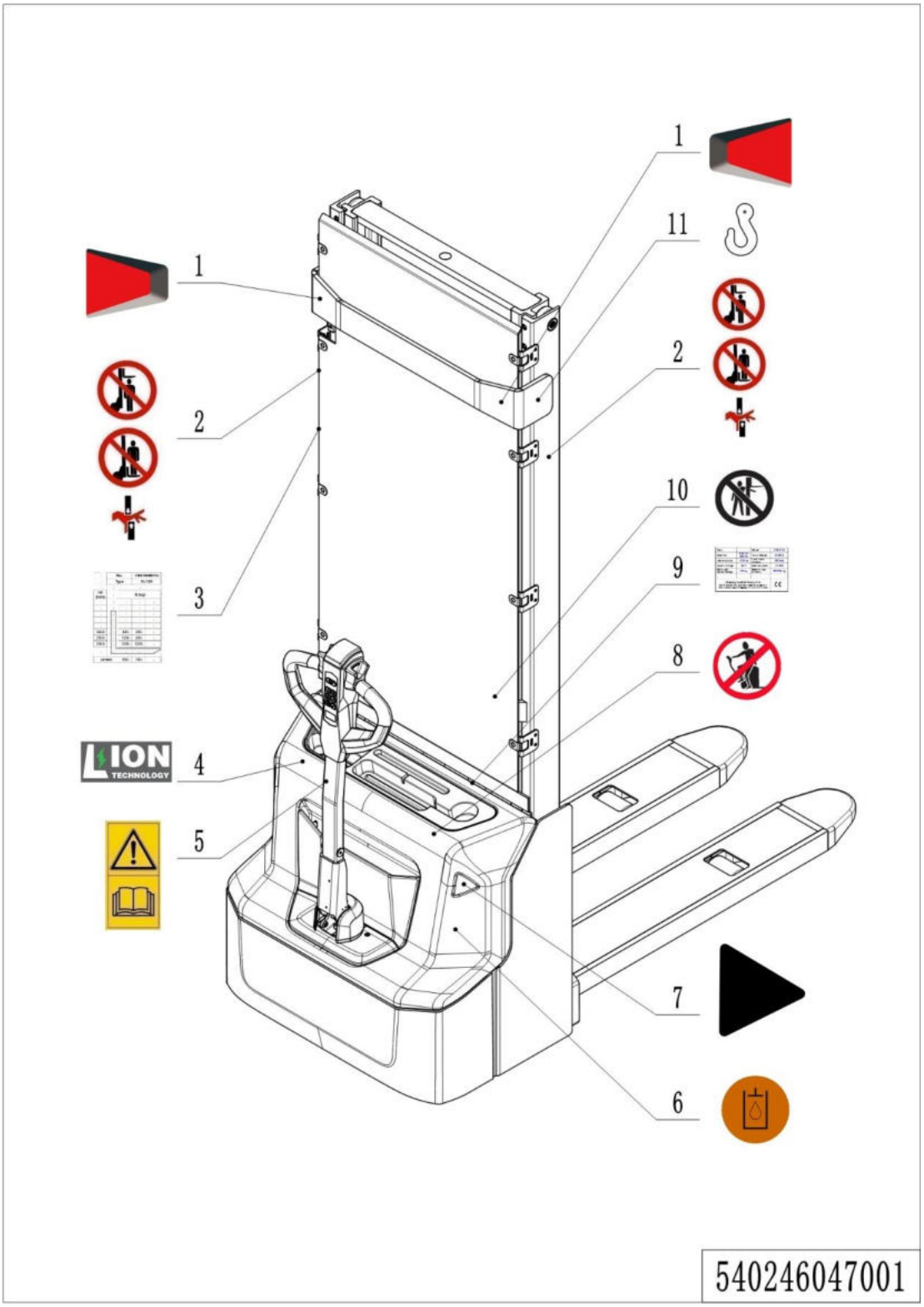

1=Supply as package; 2=Supply with limit; 3=Phasing out supply; 4=Supply as assembly; 5=Check other lists.

01 Labels and decals (EU) (540246047001)

No.	Item Code	Mark	Item Description	Qty.	Substitute	Note
1	532247020007		Label	1		
2	941200100004		Label	2		
3	540247520101		Load Capacity Diagram	1		
4	532247020002		Label	1		Lithium battery
5	941200300002		Label	1		
6	941200300003		Label	1		Inside
7	532247020000		Label	2		
8	941200100003		Label	1		
9	540247520102		Truck data plate	1		
10	941200100006		Label	1		
11	941200300001		Label	2		

02 Labels and decals (USA) (540246047002)

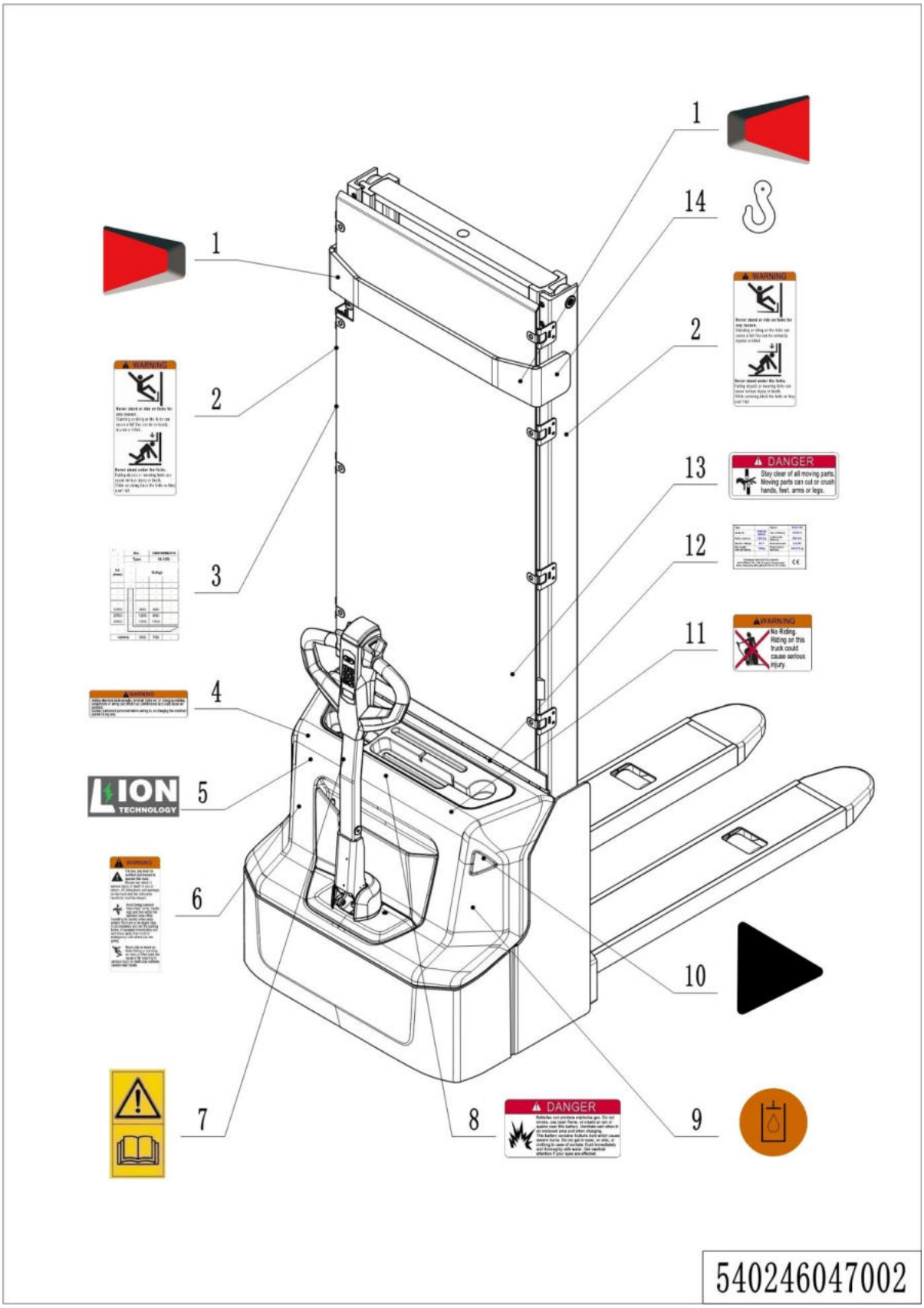

02 Labels and decals (USA) (540246047002)

No.	Item Code	Mark	Item Description	Qty.	Substitute	Note
1	532247020007		Label	1		
2	941200100016		Label	2		
3	540247520103		Load Capacity Diagram	1		
4	941200100010		Label	1		
5	532247020002		Label	1		Lithium battery
6	941200100009		Label	1		
7	941200300002		Label	1		
8	941200100013		Label	1		
9	941200300003		Label	1		Inside
10	532247020000		Label	2		
11	941200100011		Label	1		
12	540247520104		Truck data plate	1		
13	941200100014		Label	1		
14	941200300001		Label	2		

Appendix

01 Electrical circuit diagram (540246045501)

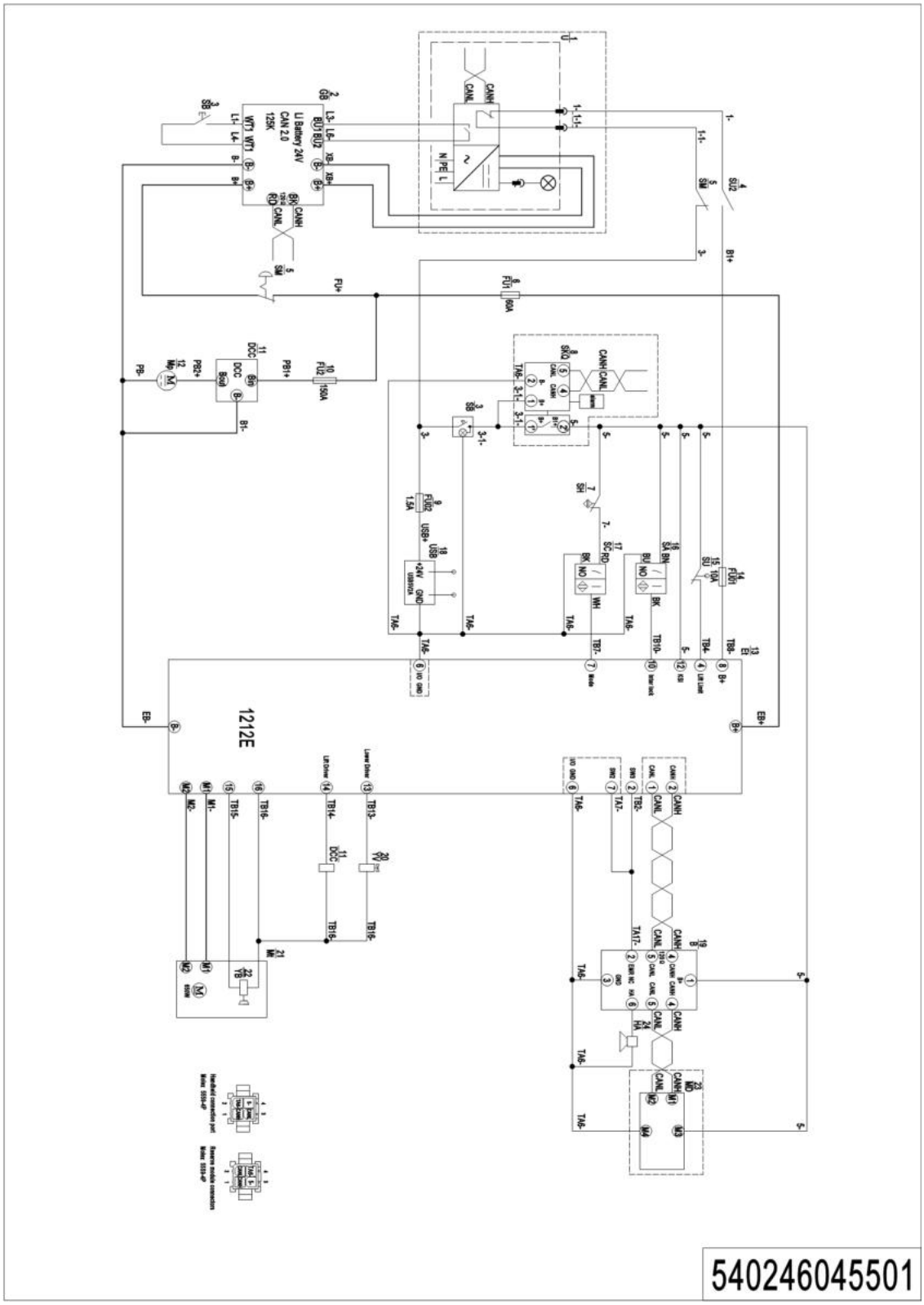

02 Hydraulic circuit diagram (532246045503)

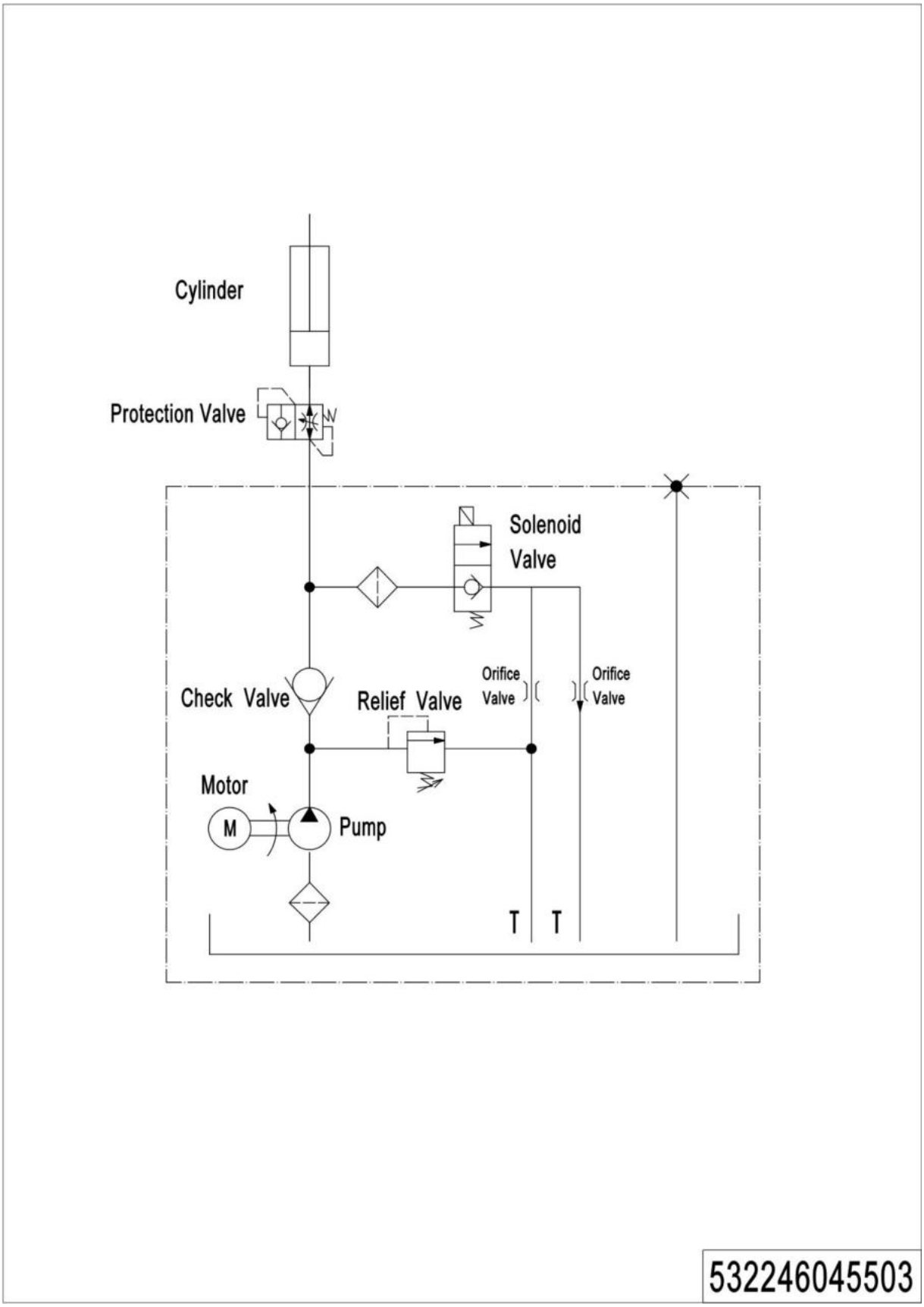

03 Easy worn parts list

No.	Item Code	Item Description	Qty.	Chapter/ Section/ Number
1	910700200019	Bearing	4	Chapter 4/03/3.01
1	910700200019	Bearing	2	Chapter 4/04/10.02
2	940300300011	WheelΦ84x93	2	Chapter 4/03/3.02
3	532298510003	Load Roller Accessories	2	Chapter 4/03/3
4	940300300030	WheelΦ100x50	1	Chapter 4/04/10.01
5	910700600001	Bearing	1	Chapter 4/04/15
6	910700700011	Bearing	1	Chapter 4/04/8
7	532298510004	Caster Assembly	1	Chapter 4/04/10
8	532211020003	Gas Spring	1	Chapter 4/01/10.3
9	940500200001	Bushing	2	Chapter 4/01/6
10	540298510002	Seal Kit	1	Chapter 5/01/23.01
11	910700200020	Bearing	2	Chapter 5/01/38
12	920100100003	Fuse	1	Chapter 6/02/9
13	920100100007	Fuse	1	Chapter 6/02/7
14	920100200002	Fuse	1	Chapter 6/02/2