Print Number: Print Date:

NOBLELIFT 诺力

Electric Stacker PSE15L-C2

PARTS MANUAL

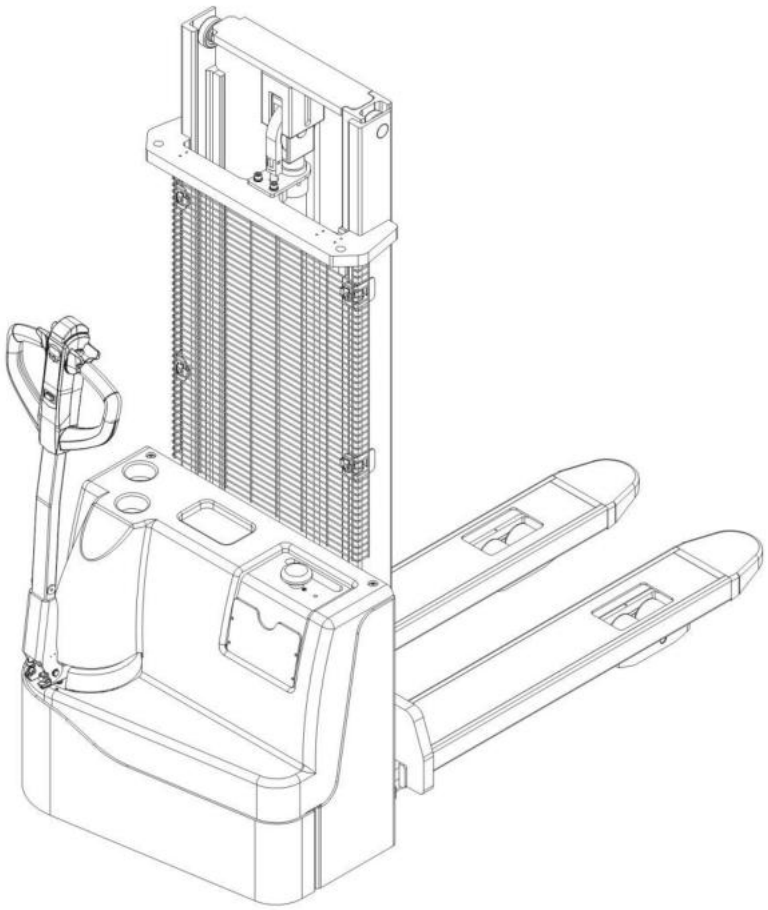

Version：V01

Truck Identification Number From:

Parts Manual

PSE15L-C2-PM01EN

Please order spare parts from an authorized dealer of Noblelift Intelligent Equipment Co., LTD.

In order to avoid wrong shipping, all the orders of parts should be marked with the following items:

- Truck model, manufacturing number and year of manufacture.
- When ordering spare parts for mast, hydraulic parts, steer bridge and motor, the manufacturing number shall be noted.
- The article number for spare parts of Noblelift are shown in the spare parts list. Please also pay attention to the mark of supply status and order quantity, etc. (the number listed in "Mark" column of the spare parts list).

"Mark" column:

The unmarked number indicates the lead time for these parts is short.

Number 1: Supply as package. Indicating that supply the small parts or sealing parts as packages, with its minimum quantity for each package, the lead time for these spare parts is short.

Number 2: Supply with limit. Indicating that these parts are not in stock and will be prepared for production after receiving the order from the customer. The lead time may be long.

Number 3: Phasing out supply. Indicating that due to technical improvements, these parts are replaced by new parts and will not be supplied after current stock run out. Please check the corresponding explanations.

Number 4: Supply as assembly. Indicating that these parts are assembly parts specified by the manufacturing process, which cannot be supplied as single part.

Number 5: Check other lists. This list is the property of Noblelift and can be shared under the confidential agreement only, Noblelift has the right to claim for compensation. Copy is not allowed without the permission of Noblelift. The figures are not limited by the original design structure. Noblelift Intelligent Equipment Co., LTD reserves the right to improve the products to adapt to the continuous progress of technology.

Table of Contents

PARTS MANUAL **1**
Chapter 1: Drive System **4**
01 Drive Unit（540046013501） 4
02 Drive Assembly（537046013502） 6
Chapter 2: Hydraulic System **8**
01 Hydraulic Components（540046024001） 8
02 Hydraulic Unit（532246023501） 10
Chapter 3: Truck Frame **12**
01 Fork Carriage（540046038001） 12
02 Chassis (Single Stage Mast)（537046021501） 14
02 Chassis (Single Stage Mast)（537046021501）Continuation 16
03 Chassis (Two Stage Mast)（537046021502） 18
04 Inner Mast Assembly（540046044001） 21
Chapter 4: Steering System, Braking System, Wheels **23**
01 Tiller Unit（537046011001） 23
03 Load Roller(Tandem Rollers)(532646017001) 25
04 Load Roller(Single Roller)(537046017001) 27
05 Caster（532246016501） 29
Chapter 5: Electrical Parts **31**
01 Display Assembly（540046010000） 31
02 Traction Battery（540046037001） 33
03 Wire Harness（540046033001） 35
03 Wire Harness（540046033001） 36
Chapter 6: Special Parts **37**
01 Load Backrest(Optional)（532646040501） 37
Chapter 7: Others **39**
01 Label and Decal(EU) (540046047001) 39
02 Label and Decal(USA)（540046047002） 41
Appendix **43**
01 Electrical Circuit Diagram（537046045501） 43
03 Hydraulic Circuit Diagram（537046045503） 44
04 Consumable Parts List 45

Chapter 1: Drive System

01 Drive Unit（540046013501）

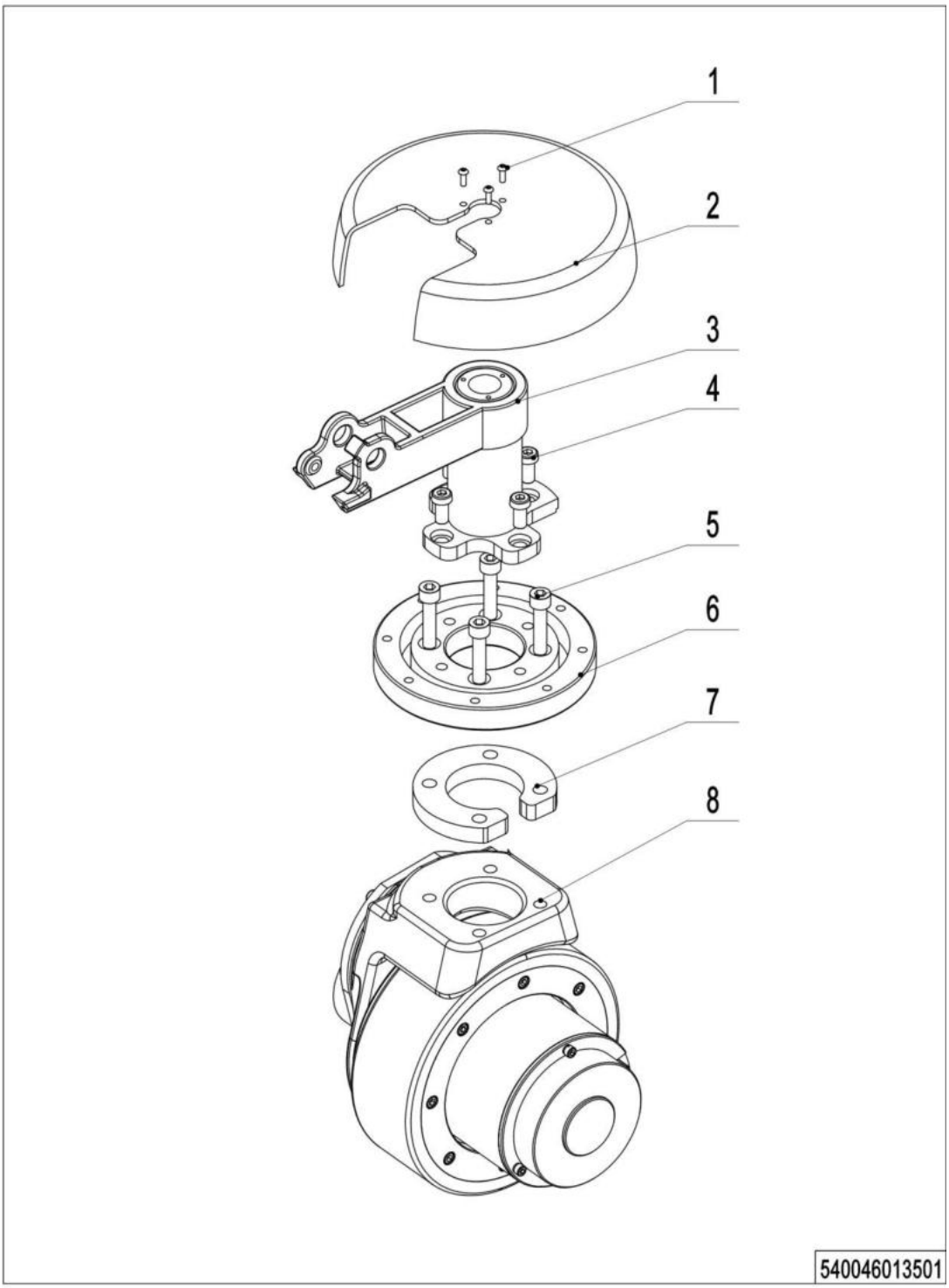

01 Drive Unit（540046013501）

No.	Item Code	Mark	Item Description	Qty.	Substitute	Note
1	910200200022	1	Screw	3		
2	532013520005	2	Protective Cover(Driving Wheel)	1		
3	540011010000	1	Bracket	1		
4	910200200076	1	Screw	4		
5	910200200061	1	Screw	4		
6	532213520001		Slewing Bearing	1		
7	531813520005	2	Plate	1		
8	940900100028	2	Drive Assembly	1		

02 Drive Assembly（537046013502）

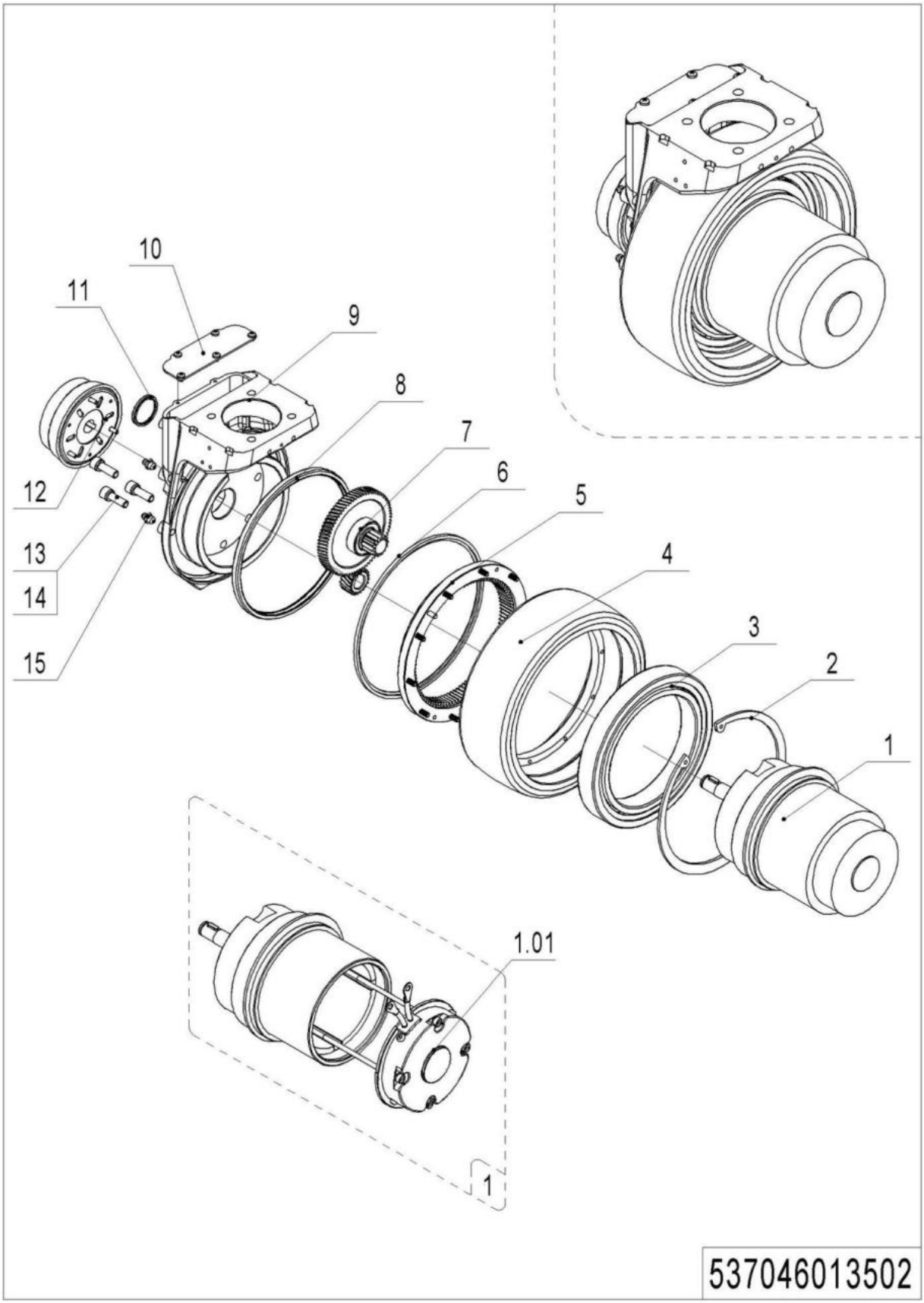

02 Drive Assembly（537046013502）

No.	Item Code	Mark	Item Description	Qty.	Substitute	Note
--	961000800000	2	Drive assembly	1		
1	537098510011	2	Motor	1		
1.01	537098510015	2	Carbon Brush	1		
2	910401400015	1	Circlip	1		
3	910700200053		Bearing	1		
4	961000700008	2	Tyre	1		
5	961000700007	2	Gear	1		
6	961000700009	1	Wiper Seal	1		
7	537098510012	2	Gear Components	1		
8	961000700013	1	Oil Seal	1		
9	537098510013	2	Gearbox	1		
10	537098510014	2	Close PlateAssembly	1		
11	961000700005	2	Cover	1		
12	961000700011	2	Brake	1		
13	910200200147	1	Screw	5		
14	910400500019	1	Spring Washer	5		
15	911200100003	1	Oil Cup	2		

Chapter 2: Hydraulic System

01 Hydraulic Components（540046024001）

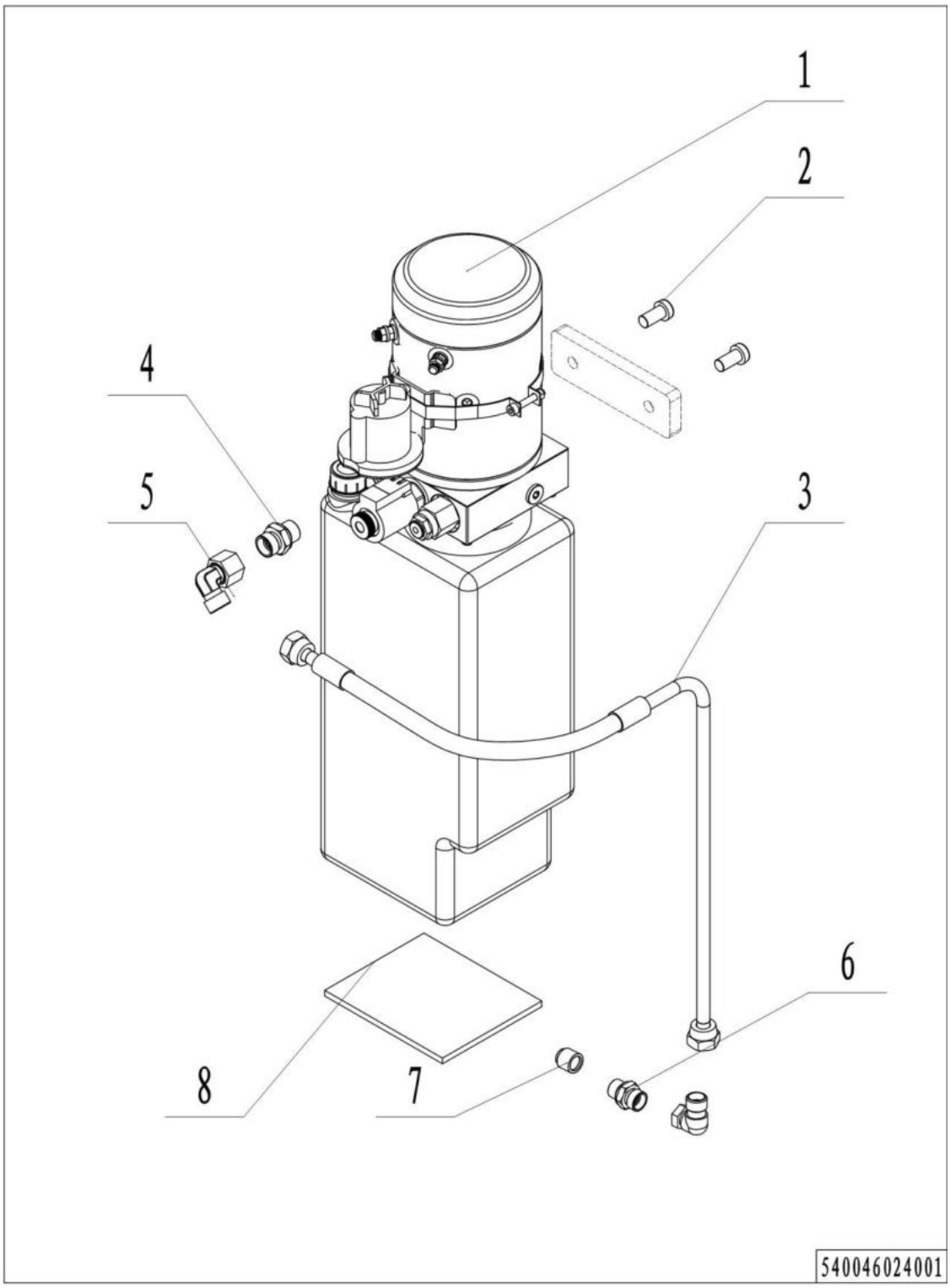

1= Supply as package. 2= Supply with constraints. 3= Phasing-out supply. 4= Supply as assembly. 5= Check other tables.

01 Hydraulic Components（540046024001）

No.	Item Code	Mark	Item Description	Qty.	Substitute	Note
1	----------		Hydraulic Unit	1		Check532246023501
2	910200400035	1	Screw	2		
3	536824010000	2	Hose	1		
4	950400300007	1	Joint	1		
5	950400200003	1	Joint	2		
6	950400400003	1	Joint	1		
7	950600300001	1	Safety Valve	1		
8	532223520002	2	Crash Pad	1		

02 Hydraulic Unit（532246023501）

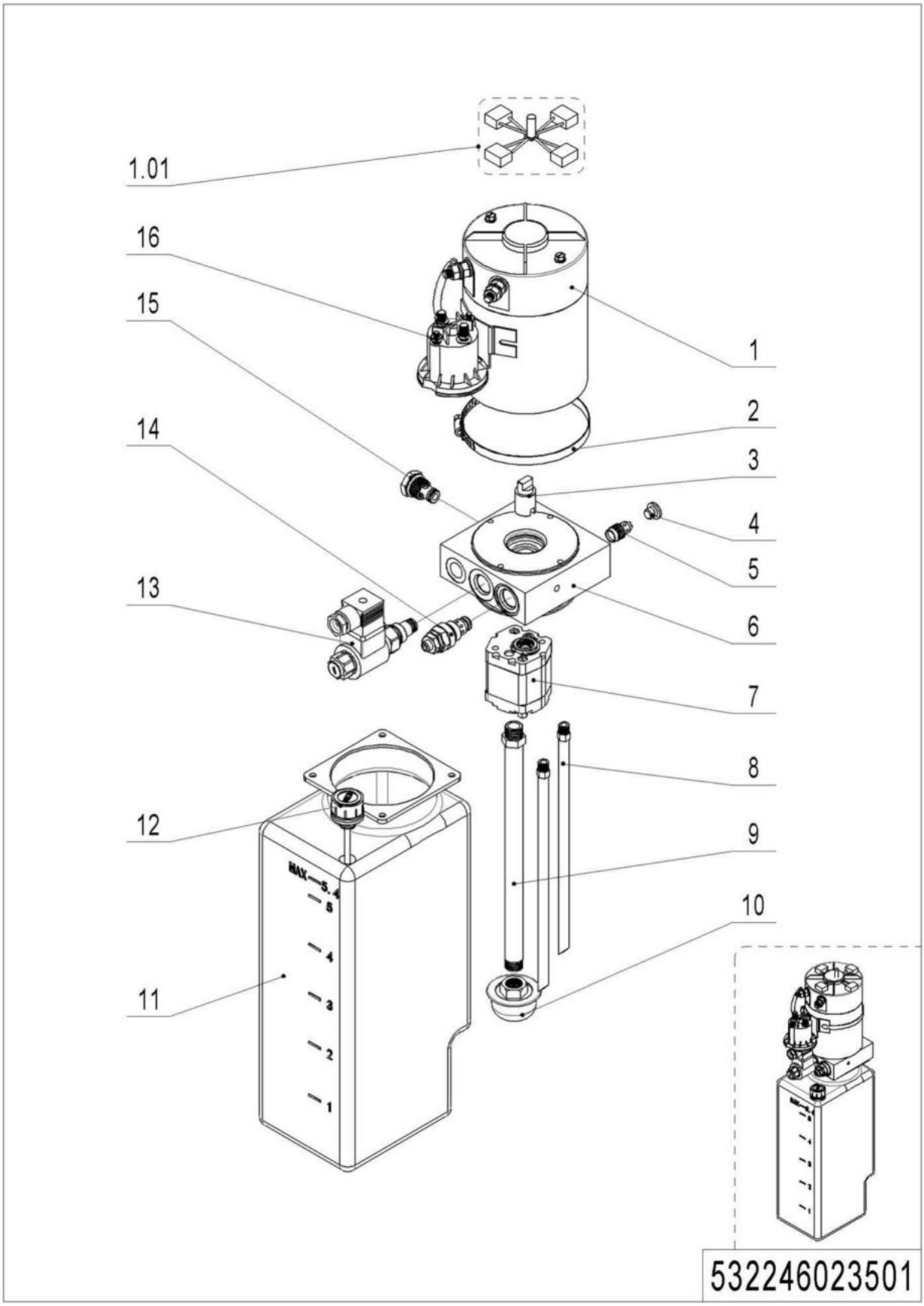

1= Supply as package. 2= Supply with constraints. 3= Phasing-out supply. 4= Supply as assembly. 5= Check other tables.

02 Hydraulic Unit（532246023501）

No.	Item Code	Mark	Item Description	Qty.	Substitute	Note
--	950900100069	2	Pump Unit	1		
1	532298510037	2	Motor	1		
1.01	532298510026	2	Carbon Brush	1		
2	532298510040	2	Hose Clamp	1		
3	532298520007	2	Coupling	1		
4	532298520003	2	End Cap	1		
5	532298510027	2	Valve	1		
6	532298520006	2	Valve Block	1		
7	532298510032	2	Gear pump	1		
8	532298520004	2	Pipe	2		
9	532298520005	2	Oil Tube	1		
10	532298510031	2	Filter	1		
11	532298510029	2	Tank	1		
12	532298510030	2	Cap-Tank	1		
13	532298510042	2	Magnetic Valve	1		
14	532298510035	2	Overflow valve	1		
15	532298510028	2	Check Valve	1		
16	532298510036	2	Switch	1		

Chapter 3: Truck Frame

01 Fork Carriage（540046038001）

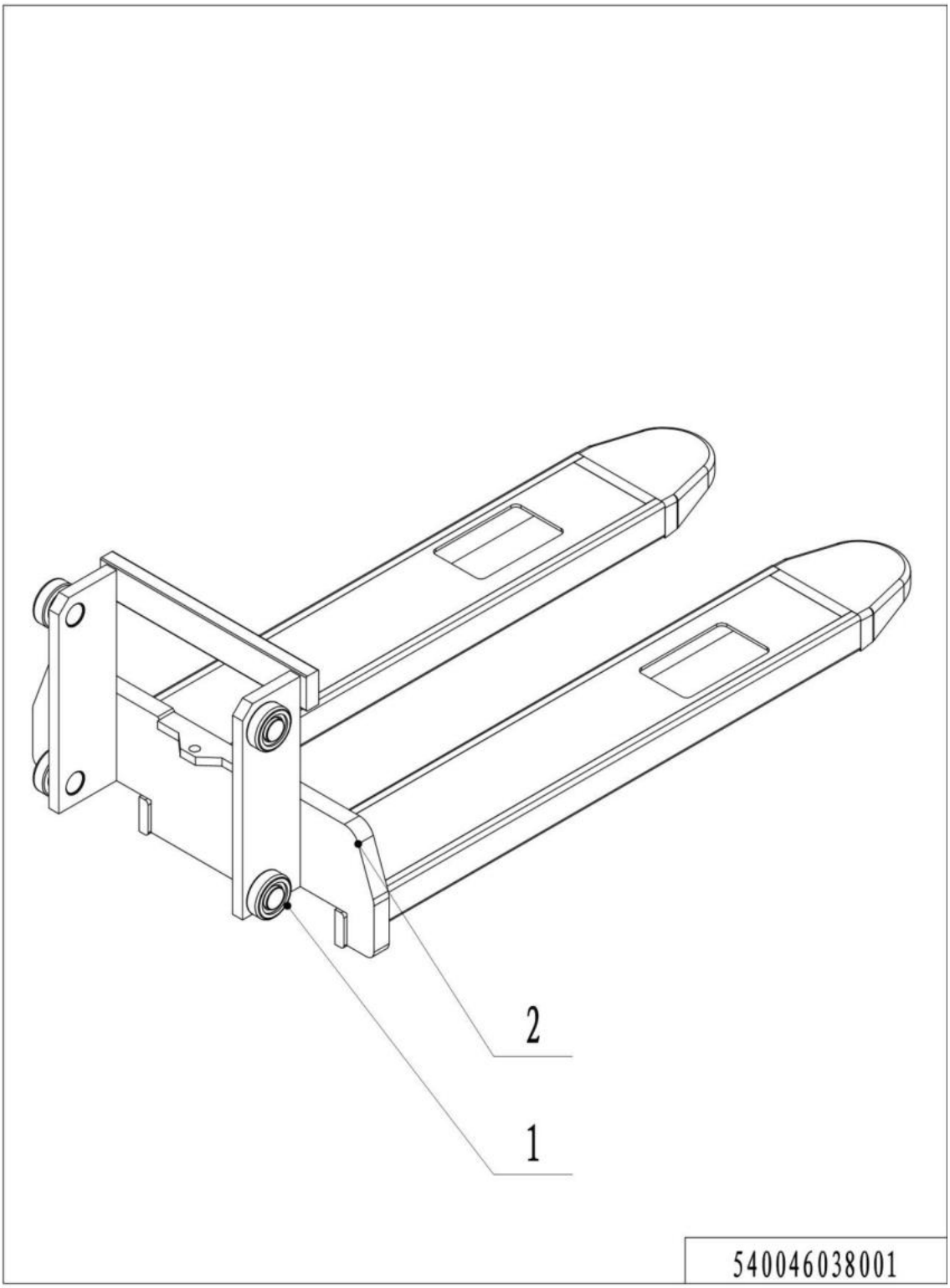

01 Fork Carriage（540046038001）

No.	Item Code	Mark	Item Description	Qty.	Substitute	Note
1	940200300002		Compound Roller	4		
2	540038010000	2	Fork (570x1150)	1		
3	540038010001	2	Fork (685x1150)	1		
4	540038010002	2	Fork (570x1150)	1		
5	540038010003	2	Fork (685x1150)	1		

02 Chassis (Single Stage Mast)（537046021501）

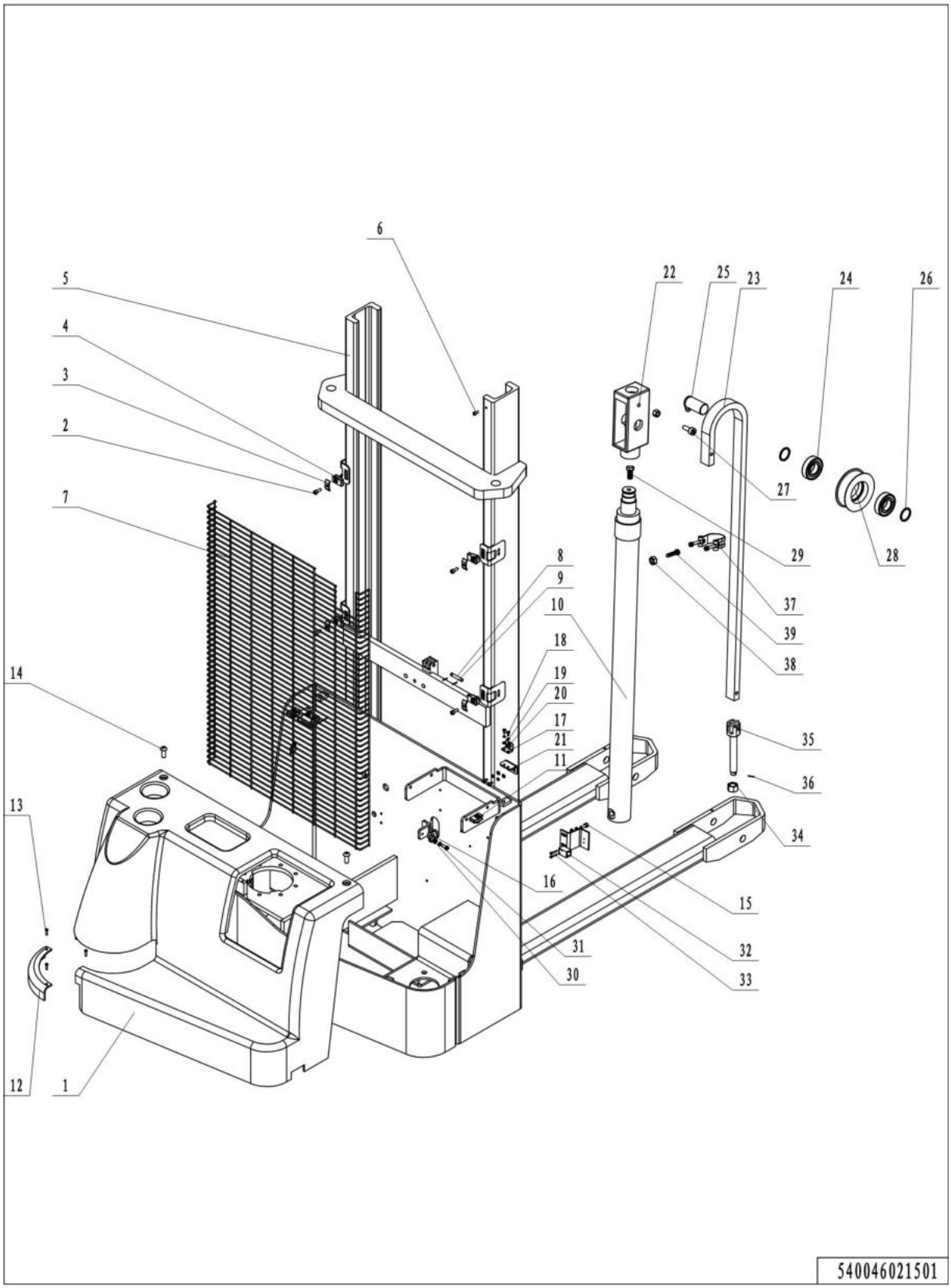

02 Chassis (Single Stage Mast)（537046021501）

No.	Item Code	Mk	Item Description	Qty.	Substitute	Note
1	532021520046	1	Electrical box cover	1		
2	910200300018	1	Screw	4		
3	320443020321	2	Press Plate	4		
4	940400400001	1	Cage Nut	4		
5	540021510002	2	Chassis(1600,570x1150)	1		1600
5	540021510003	2	Chassis(1600,685x1150)			1600
5	540021510004	2	Chassis(2000,570x1150)			2000
5	540021510005	2	Chassis(2000,685x1150)			2000
6	910200200075	1	Screw	2		
7	537021520013		Protective Frame	1		1600
7	537021520014		Protective Frame	1		2000
8	941100800008	2	Pin B8x40	2		
9	910600600015	1	Cotter Pin	2		
10	531821510015		Cylinder Φ50xΦ40x765			1600
10	531821510016		CylinderΦ50xΦ40x965	1		2000
11	940400400003	1	Cage Nut	2		
12	532021520059	2	Arc plate	1		
13	910200300012	1	Screw	3		
14	910200300032	1	Screw	2		
15	910200200035	1	Screw			
16	951000100001	1	Hose Clamp	1		
17	921300300003	1	Connector holder 4-core	1		
18	910200200022	1	Screw	4		
19	910400100004	1	Flat Washer	4		
20	910400500004	1	Spring Washer	4		
21	531821520031	1	Mounting Plate(Connector)	1		
22	531821520028	1	Yoke	1		
23	532643510087	2	Plate chain	1		1600

02 Chassis (Single Stage Mast)（537046021501）Continuation

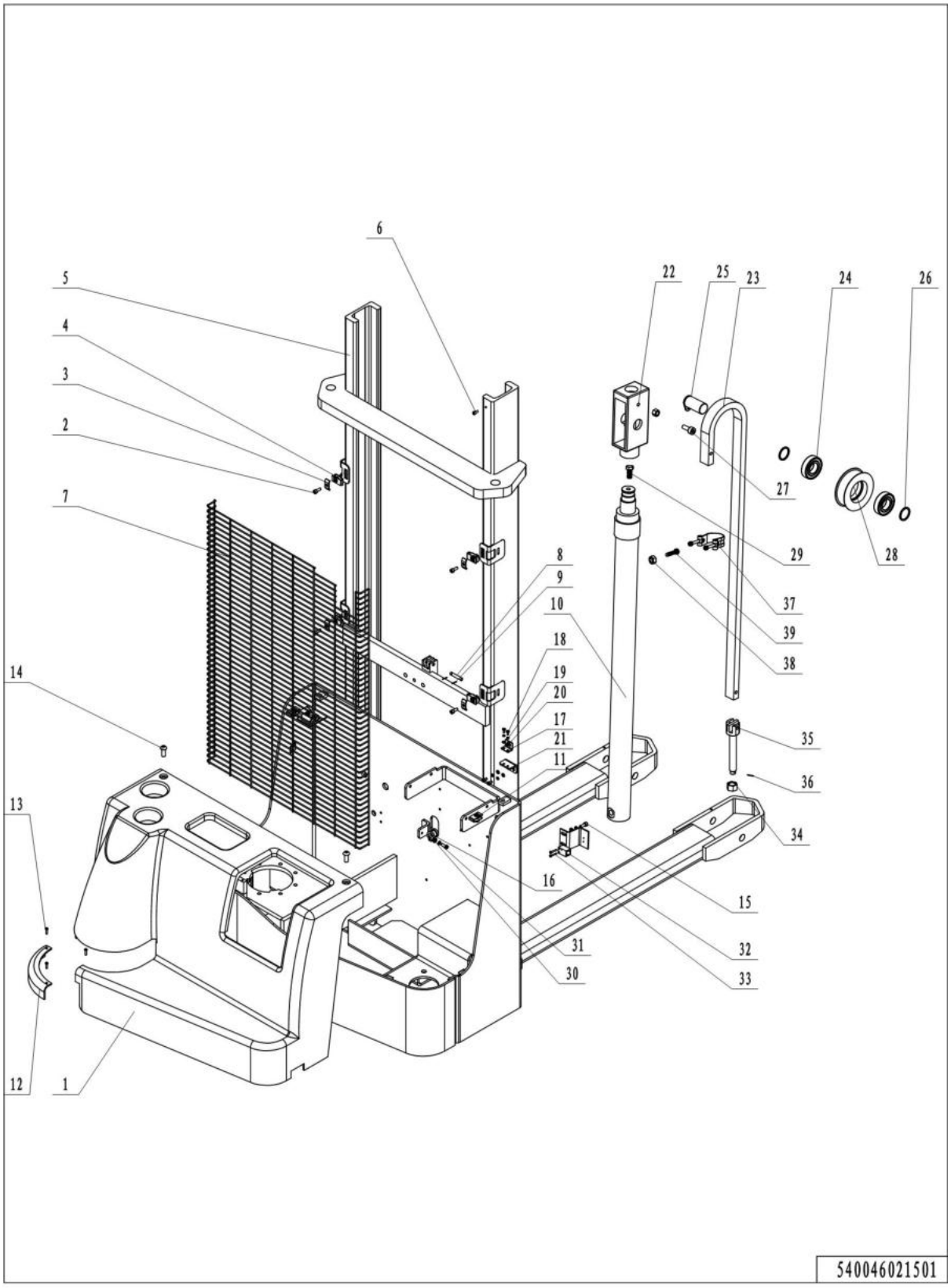

02 Chassis (Single Stage Mast)（537046021501）Continuation

No.	Item Code	Mark	Item Description	Qty.	Substitute	Note
23	531821510014		Plate chain	1		2000
24	910700200021		Bearing			
25	532644010035		Pin			
26	940600500008	1	Washer	2		
27	910200400016	1	Screw	1		
28	940200400003		SprocketΦ102xΦ62x29	4		
29	910100300049		Bolt	1		
30	910400100005	1	Flat Washer	1		
31	910400500005		Spring Washer	1		
32	920200400033	1	Proximity Switch			
33	910200500015		Screw			
34	532644020096		Chain Anchor	1		
35	910300200008		Nut	2		
36	910600600037		Cotter Pin	1		
37	940800600006		HoopΦ80	2		
38	910300100007		Nut	1		
39	910100300039	1	Bolt	1		

03 Chassis (Two Stage Mast)（537046021502）

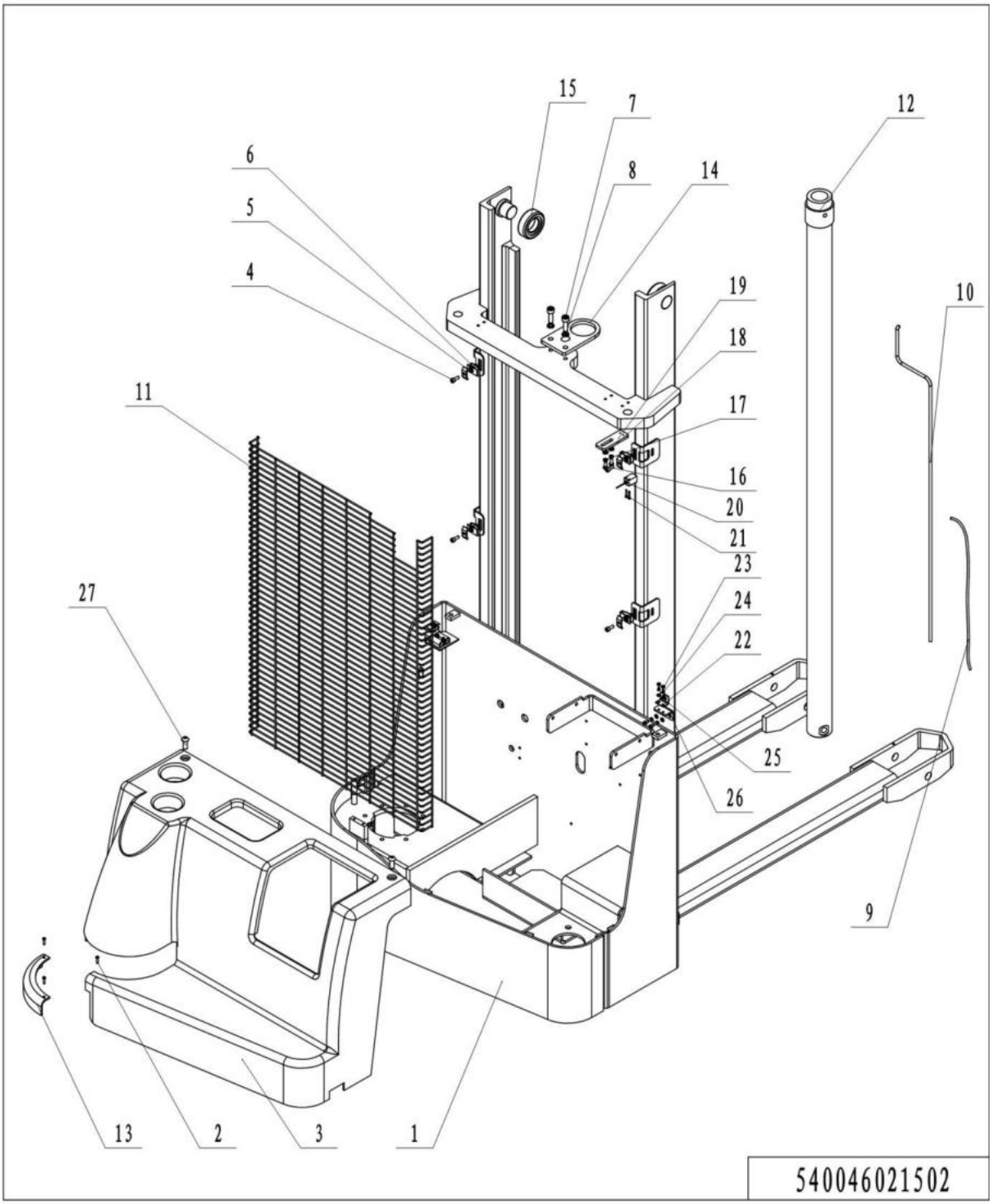

03 Chassis (Two Stage Mast)（537046021502）

No.	Item Code	Mark	Item Description	Qty.	Substitute	Note
1	540021510006	2	Chassis(2600,570x1150)	1		2600
1	540021510007	2	Chassis(2600,685x1150)	1		2600
1	540021510000	2	Chassis(2900,570x1150)	1		2900
1	540021510001	2	Chassis(2900,685x1150)	1		2900
1	540021510008	2	Chassis(3200,570x1150)	1		3200
1	540021510009	2	Chassis(3200,685x1150)	1		3200
1	540021510010	2	Chassis(3600,570x1150)	1		3600
1	540021510011	2	Chassis(3600,685x1150)	1		3600
2	910200400012	1	Screw	2		
3	532021520046	2	Protective cover (electrical box)	1		
4	910200300018	1	Screw	4		
5	320443020321	2	Press Plate	4		
6	940400400001	2	Cage Nut	4		
7	910200200076	2	Screw	2		
8	910400500007	2	Spring Washer	2		
9	531833010002	1	Wire YLS-F-Z307AG-M(1280mm)	1		
10	537033010008	2	Limit wire harness	1		
11	537021520009		Protective Frame	1		2600
11	537021520010		Protective Frame	1		2900
11	537021520011		Protective Frame	1		3200
11	537021520012		Protective Frame	1		3600
12	532644010031	2	Cylinder Φ50xΦ40x1430	1		2900
12	532644010037	2	Cylinder Φ50xΦ40x1580	1		3200
12	532644010041	2	Cylinder Φ50xΦ40x1780	1		3600
12	537021510020	2	Cylinder Φ50xΦ40x1280	1		2600
13	532021520059	2	Arc plate	1		
14	532644020097	2	Fixing Plate(Cylinder)	1		
15	940200300003	1	Compound Roller	2		
16	910200200035	1	Screw	4		

17	910400100005	1	Flat Washer	4		
18	910400500005	2	Spring Washer	4		
19	531821520007	2	Fixing Plate(Speed limit switch)	1		
20	920200400033	1	Proximity Switch	1		
21	910200500015	1	Screw	2		
22	921300300003	1	Connector holder 4-core	1		
23	910200200022	1	Screw	4		
24	910400100004	1	Flat Washer	4		
25	910400500004	1	Spring Washer	4		
26	531821520031	1	Mounting Plate(Connector)	1		
27	910200300032	1	Screw	2		

04 Inner Mast Assembly（540046044001）

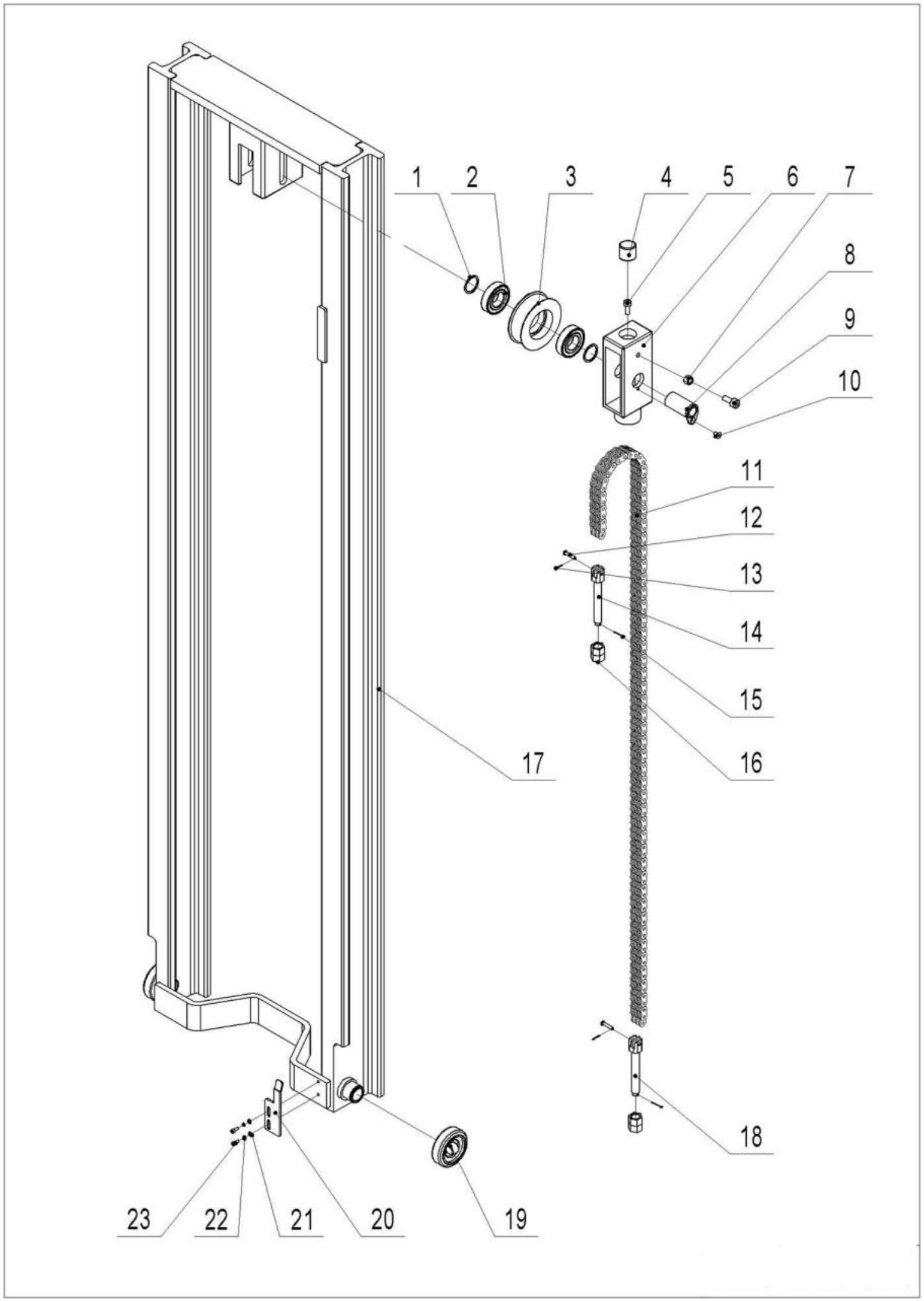

1= Supply as package. 2= Supply with constraints. 3= Phasing-out supply. 4= Supply as assembly. 5= Check other tables.

04 Inner Mast Assembly（540046044001）

No.	Item Code	Ma	Item Description	Qty.	Substitute	Note
1	940600500008	1	Washer	2		
2	910700200021	1	Bearing	2		
3	940200400003		Sprocket	1		
4	532644020094		Crash Pad	1		
5	910100300049	1	Bolt	1		
6	531821520028		Yoke	1		
7	910300300005	1	Nut	2		
8	532644010035	2	Pin	1		
9	910200200075	1	Screw	2		
10	910200400014	1	Screw	1		
11	537044010010	2	Chain	1		2600
11	532644010083	2	Chain	1		2900
11	532644010068	2	Chain	1		3200
11	532644010069	2	Chain	1		3600
12	941100800008	1	Pin	2		
13	910600600015	1	Cotter Pin	2		
14	532644020096	1	Chain Anchor	1		
15	910600600037	1	Cotter Pin	2		
16	910300200008	1	Nut	4		
17	540044010001	2	Inner Mast(2900)	1		
18	532643520137	1	Chain Anchor	1		
19	940200300007	1	Compound Roller	2		
20	531821520001	2	Stop Plate	1		
21	910400100005	1	Flat Washer	2		
22	910400500005	1	Spring Washer	2		
23	910200300017	1	Screw	2		

Chapter 4: Steering System, Braking System, Wheels

01 Tiller Unit（537046011001）

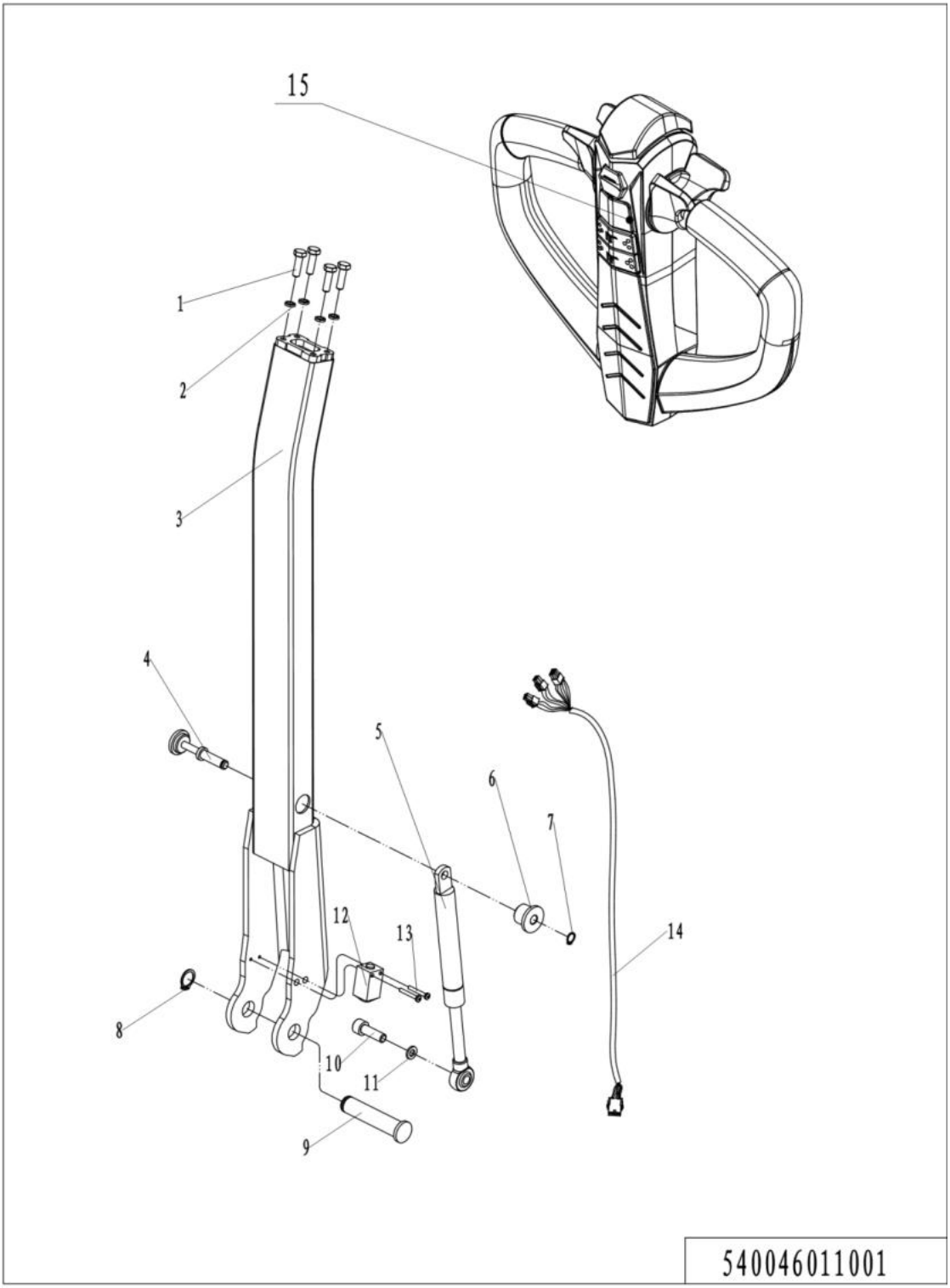

01 Tiller Unit（537046011001）

No.	Item Code	Mark	Item Description	Qty.	Substitute	Note
1	910100300011	1	Bolt	4		
2	910400500005	1	Spring Washer	4		
3	536811010000	2	Welding of handle rod	1		
4	508011010002	2	Fixed shaft welding	1		
5	508011010001	1	Gas Spring（D245）	1		
6	508011020005	2	Fixing Base	1		
7	910401300001	1	Circlip	1		
8	910401300006	1	Circlip	1		
9	508011020004	1	Pin Φ15x70	1		
10	910200200058	1	Screw	1		
11	910400100006	1	Flat Washer	1		
12	508033010011	1	Proximity Switch	1		
13	941101100001	1	Screw	2		
14						
15	922100100171	2	Handle head	1		

03 Load Roller(Tandem Rollers)(532646017001)

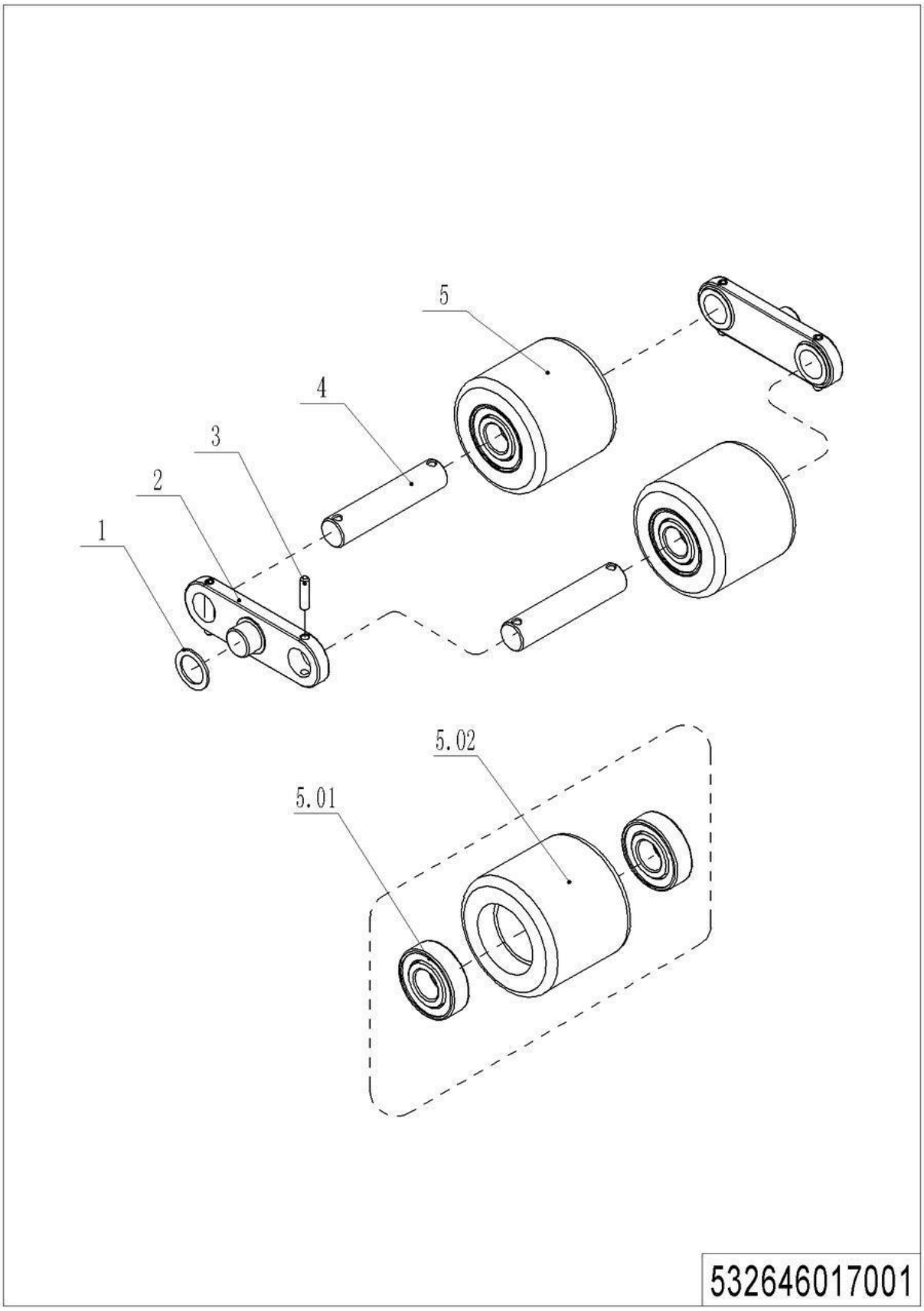

1= Supply as package. 2= Supply with constraints. 3= Phasing-out supply. 4= Supply as assembly. 5= Check other tables.

03 Load Roller(Tandem Rollers)(532646017001）

No.	Item Code	Mark	Item Description	Qty.	Substitute	Note
1	940600500012	1	Washer	4		
2	532617020002	2	Plate	4		
3	910600400027	1	Spring Pin	8		
4	502317020001		Axle	4		
5	502398510002		Wheel	4		
5. 01	910700200019		Bearing	8		
5. 02	940300300005		WheelΦ80x70	4		

04 Load Roller(Single Roller)(537046017001)

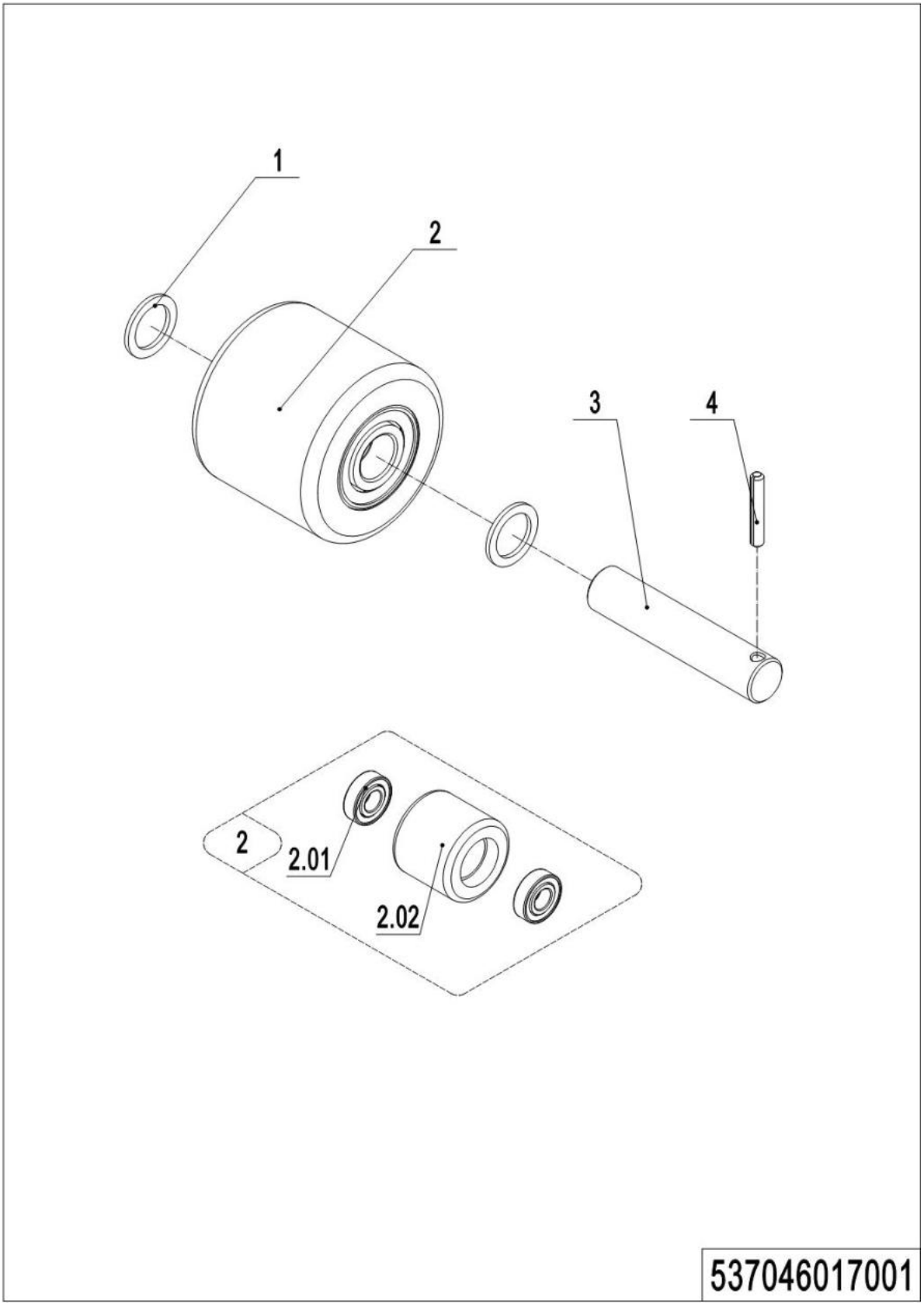

04 Load Roller(Single Roller)(537046017001）

No.	Item Code	Mark	Item Description	Qty.	Substitute	Note
1	940600500053		Washer	2		
2	502398510014		Wheel	1		
2.01	910700200019		Bearing	2		
2.02	940300300023		WheelΦ80x93	1		
3	532217020001		Axle	1		
4	910600400030		Spring Pin	1		

05 Caster（532246016501）

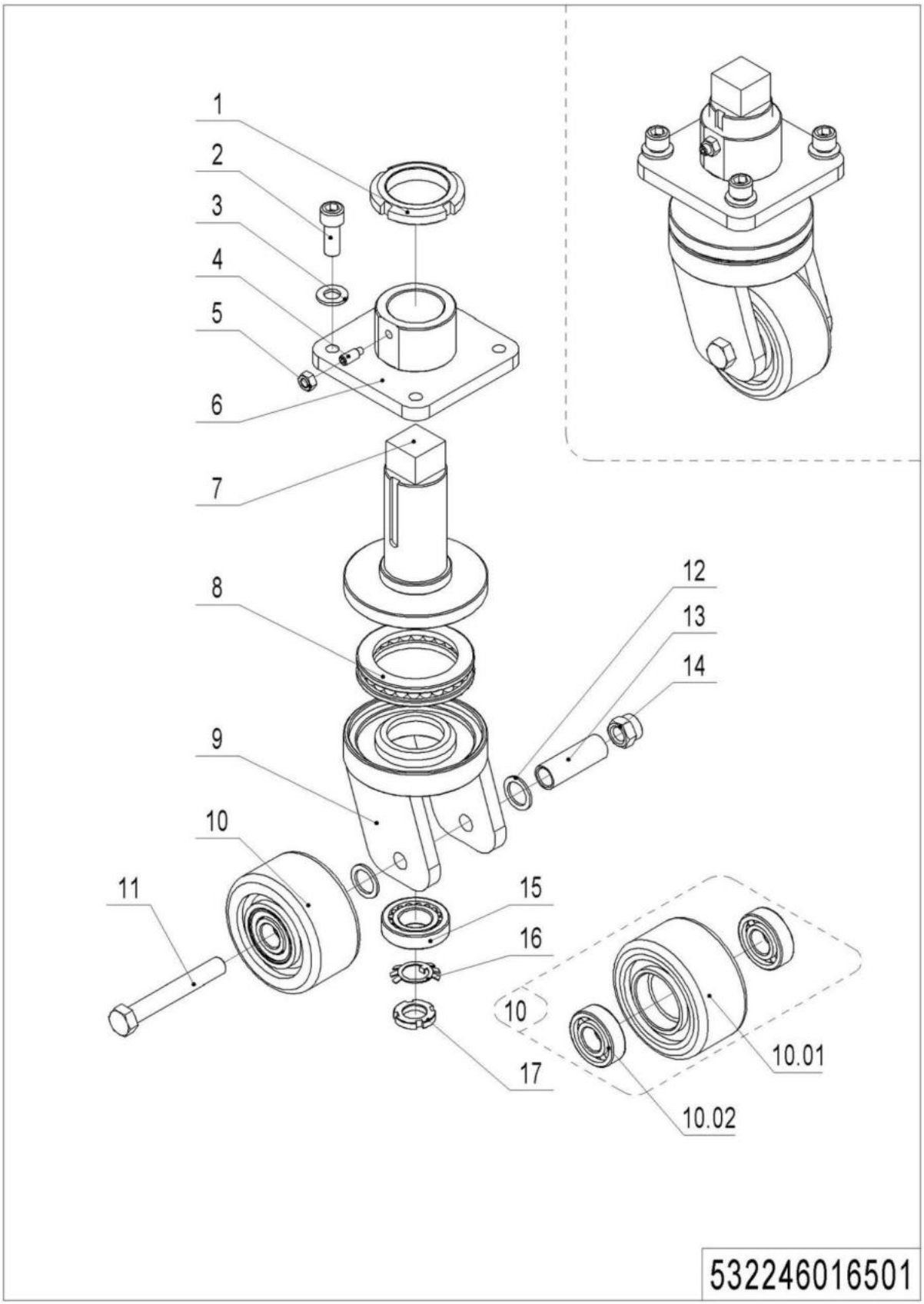

05 Caster（532246016501）

No.	Item Code	Mark	Item Description	Qty.	Substitute	Note
1	941100900004	1	Nut	1		
2	910200200098	1	Screw	4		
3	910400100008	1	Flat Washer	4		
4	910201000012	1	Screw	1		
5	910300100006	1	Nut	1		
6	532216510003	2	Fixing Base	1		
7	532216510002	2	Axle	1		
8	910700700011		Bearing	1		
9	532216510001	2	Wheel Carrier	1		
10	532298510004		Caster Assembly	1		
10.01	940300300030		WheelΦ100x50	1		
10.02	910700200019		Bearing	2		
11	910100100069	1	Bolt	1		
12	940600500005	1	Washer	4		
13	532216520006		Sleeve	1		
14	910300500007	1	Nut	1		
15	910700600001		Bearing	1		
16	910400900002	1	Lock Washer	1		
17	910300700008	1	Nut	1		

Chapter 5: Electrical Parts

01 Display Assembly（540046010000）

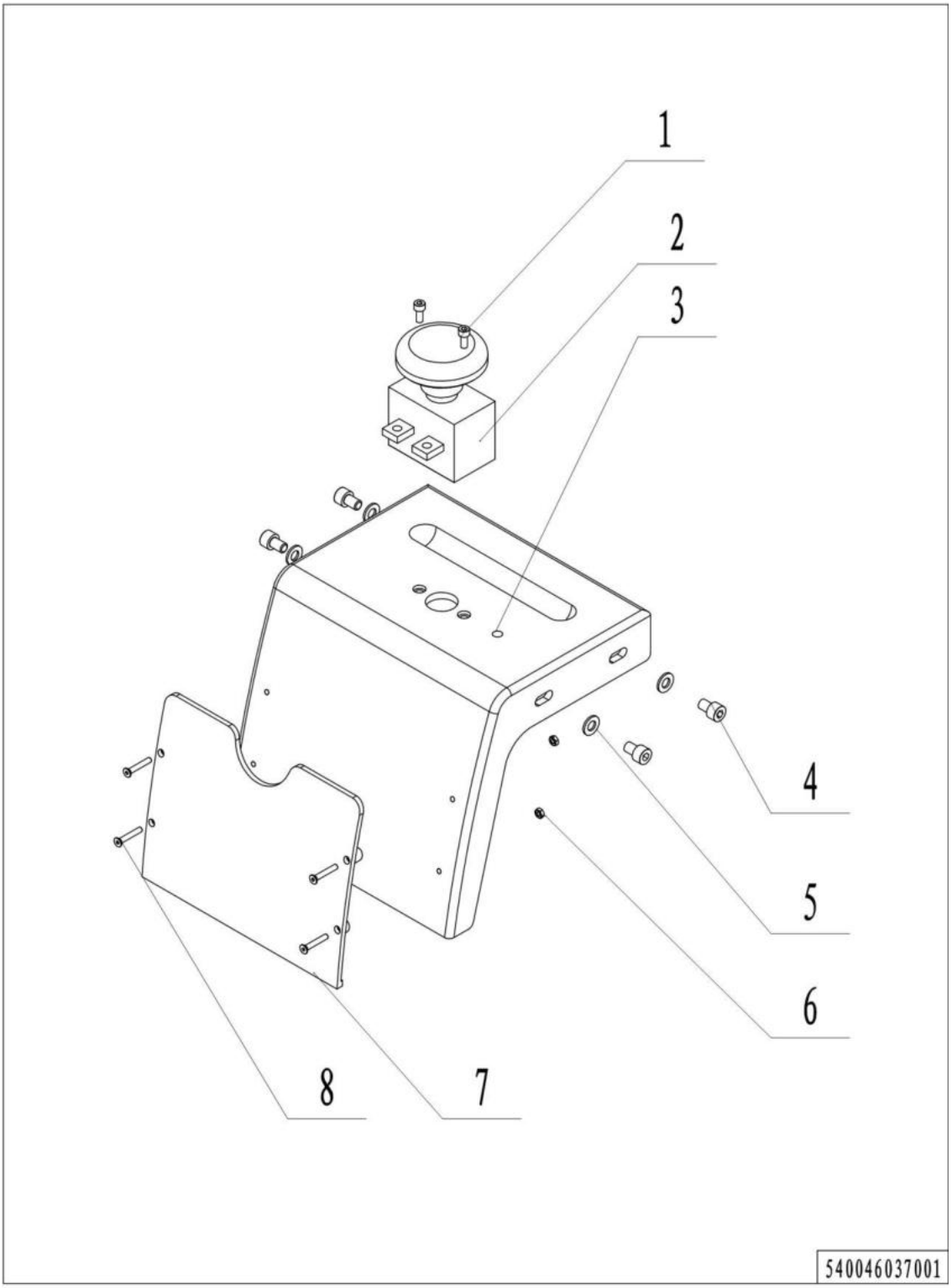

01 Display Assembly（540046010001）

No.	Item Code	Mark	Item Description	Qty.	Substitute	Note
1	91020050003	1	Screw	2		
2	92020010000	1	Emergency Button	1		
3	54001002000	2	Panel	1		
4	91020020005	1	Screw	4		
5				4		
6	91030010000	1	Nut	4		
7	53201002000	2	Folder board	1		
8	91020040000	1	Screw	4		

02 Traction Battery（540046037001）

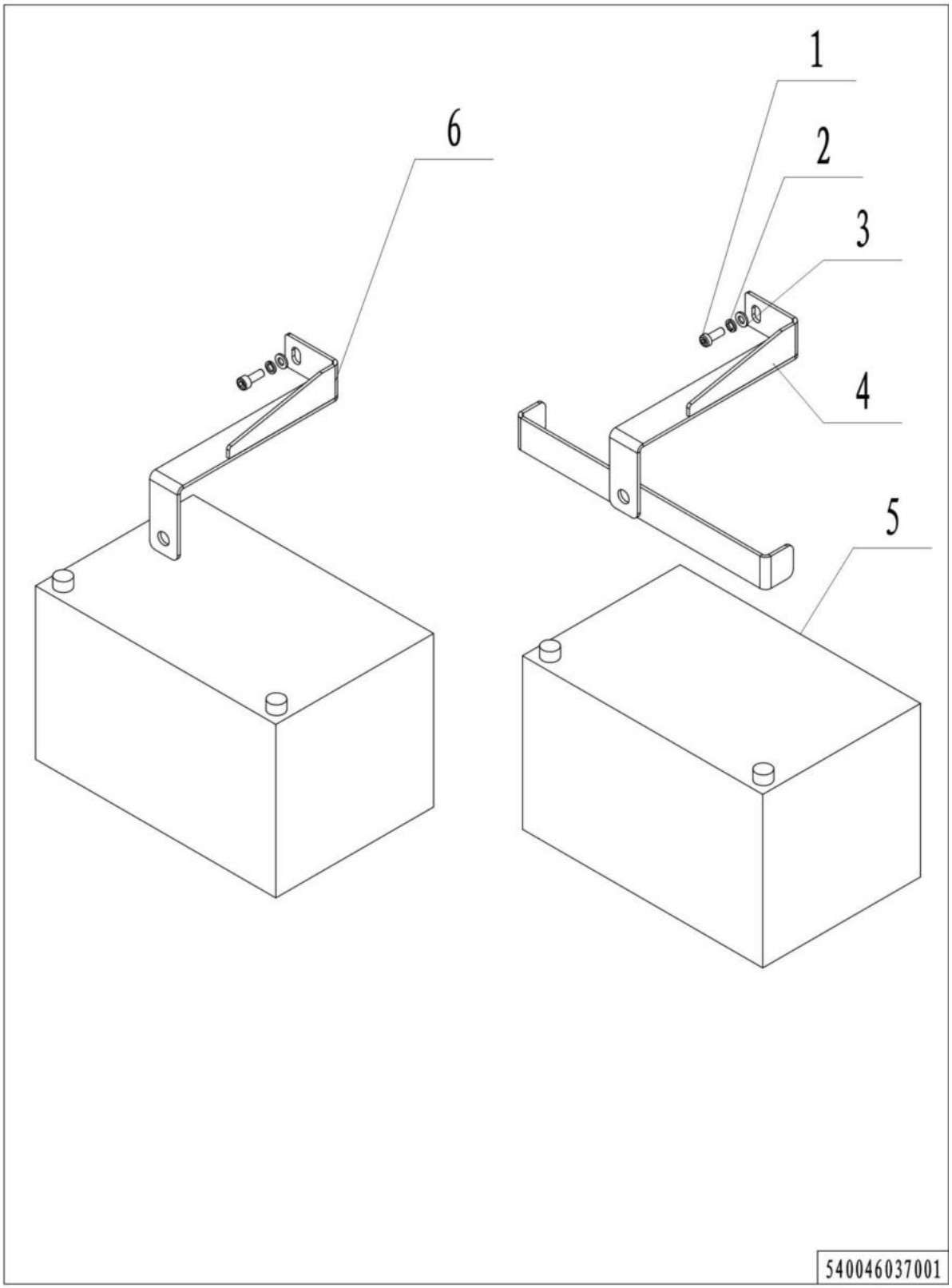

1= Supply as package. 2= Supply with constraints. 3= Phasing-out supply. 4= Supply as assembly. 5= Check other tables.

02 Traction Battery（540046037001）

No.	Item Code	Mark	Item Description	Qty.	Substitute	Note
1	910200200035	1	Screw	6		
2	910400500005	1	Spring Washer	6		
3	910400500005	1	Flat Washer	6		
4	540037010000	2	Mounting Plate	2		
5	920600100677	2	Battery12V60Ah	1		
6	540037010001	2	Mounting Plate	1		

03 Wire Harness（540046033001）

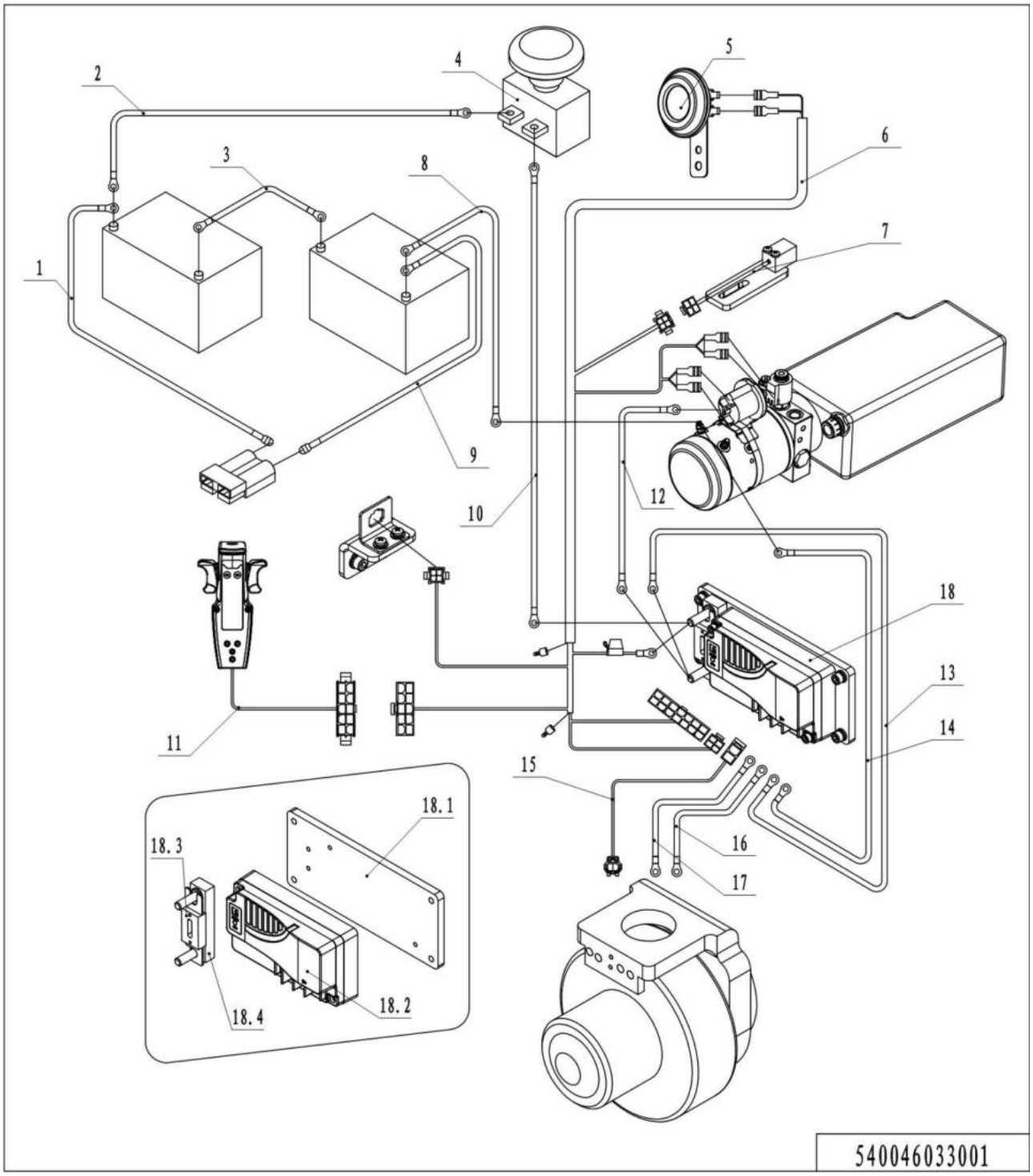

03 Wire Harness（540046033001）

No.	Item Code	Mark	Item Description	Qty.	Substitute	Note
1	536933010014	2	Cables	1		
2	536933010008	2	Cable	1		
3	536933010005	2	Cable	1		
4	920200100004	2	Emergency button	1		
5	920500100001	2	Horn	1		
6	536933010002	2	Main control harness	1		
7	536933010016	2	Proximity switch speed limit	1		
8	536933010004	2	Cable	1		
9	536933010015	2	Cables	1		
10	536933010007	2	Cable	1		
11	536933010009	2	Handle harness	1		
12	536933010006	2	Cable	1		
13	536933010013	2	Cables	1		
14	536933010012	2	Cables	1		
15	540033010002	2	Brake harness	1		
16	540033010004	2	Cables	1		
17	540033010003	2	Cables	1		
18	536933010000	2	Electronic Components	1		
18. 1	536933020000	2	Electronic Mounting plate	1		
18. 2	921400100126	2	Controller	1		
18. 3	920100100008	2	Fuse	1		
18. 4	920100400002	2	Fuse Holder SYY	1		

Chapter 6: Special Parts

01 Load Backrest(Optional)（532646040501）

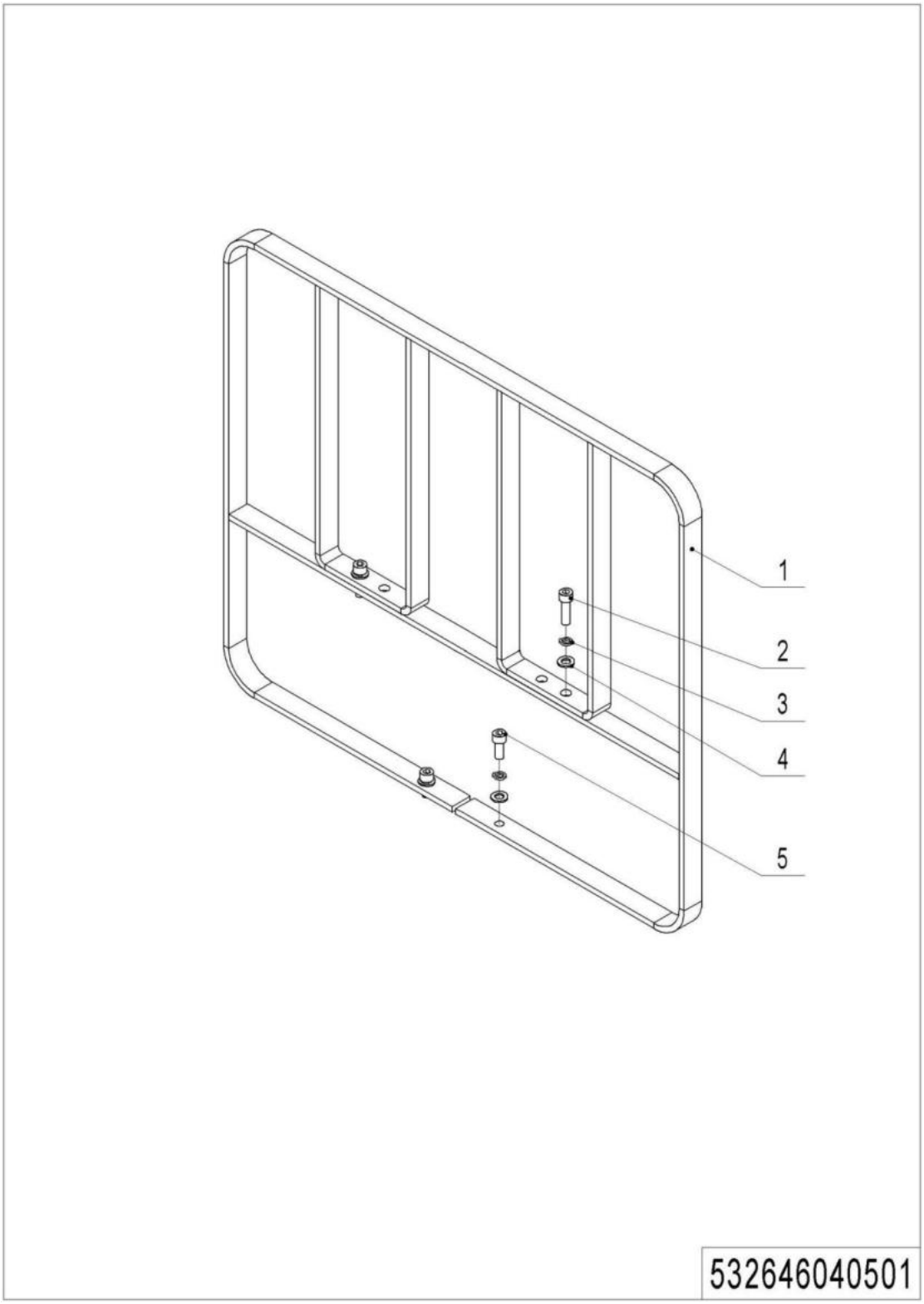

01 Load Backrest(Optional)（532646040501）

No.	Item Code	Mark	Item Description	Qty.	Substitute	Note
1	532640510001	2	Load Backrest	1		
2	910200200077	1	Screw	2		
3	910400500007	1	Spring Washer	4		
4	910400100007	1	Flat Washer	4		
5	910200200076	1	Screw	2		

Chapter 7: Others

01 Label and Decal(EU) (540046047001)

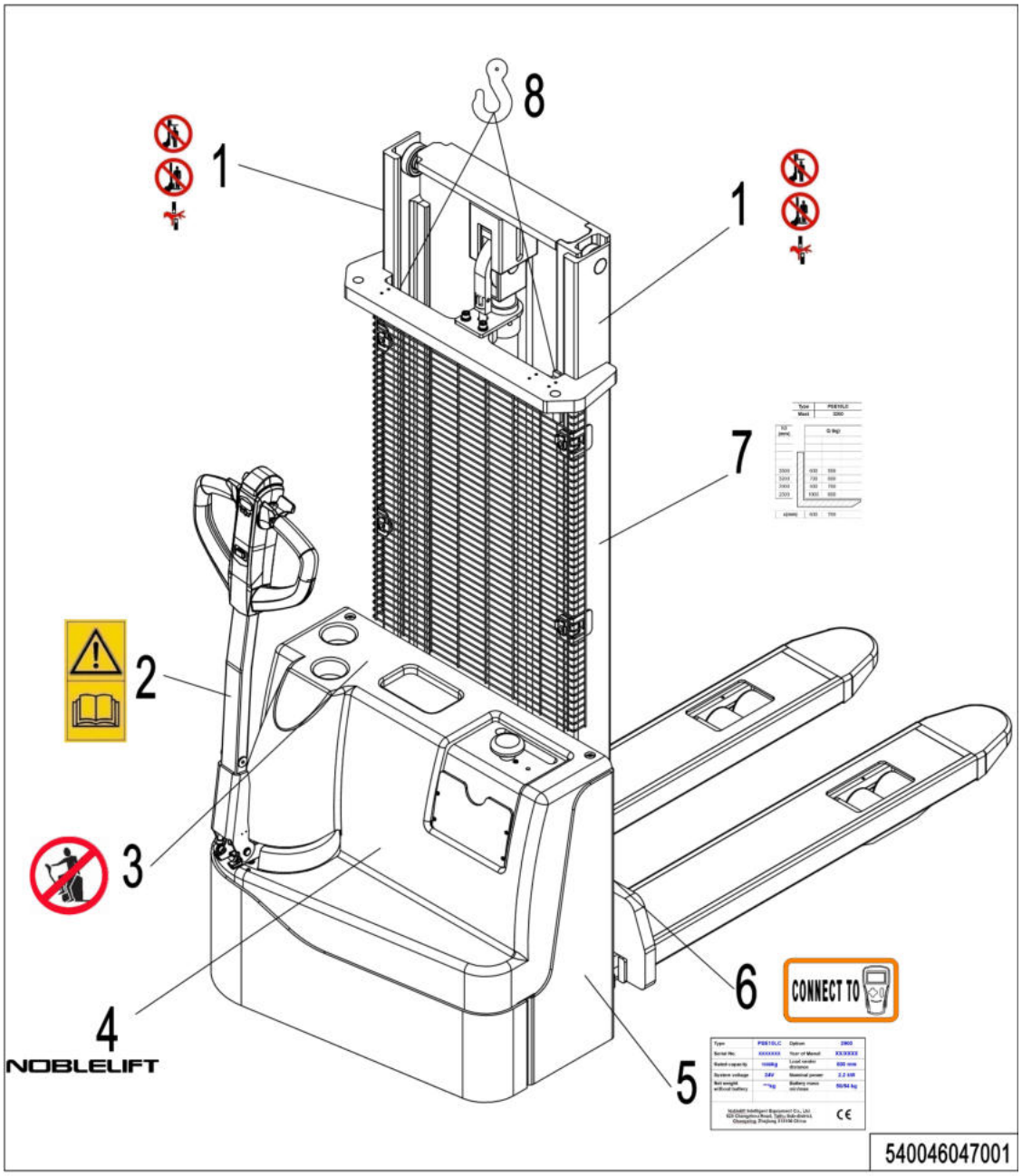

01 Label and Decal(EU) (540046047001)

No.	Item Code	Mark	Item Description	Qty.	Substitute	Note
1	941200100004		Label	2		
2	941200300002		Label	1		
3	941200100003		Label	1		
4	941200500002		Label	1		
5	537047502001		Truck data plate	1		
6	941200300019		Label	1		
7	537047502002		Load Capacity Diagram	1		
8	941200300001		Label	2		

02 Label and Decal(USA)（540046047002）

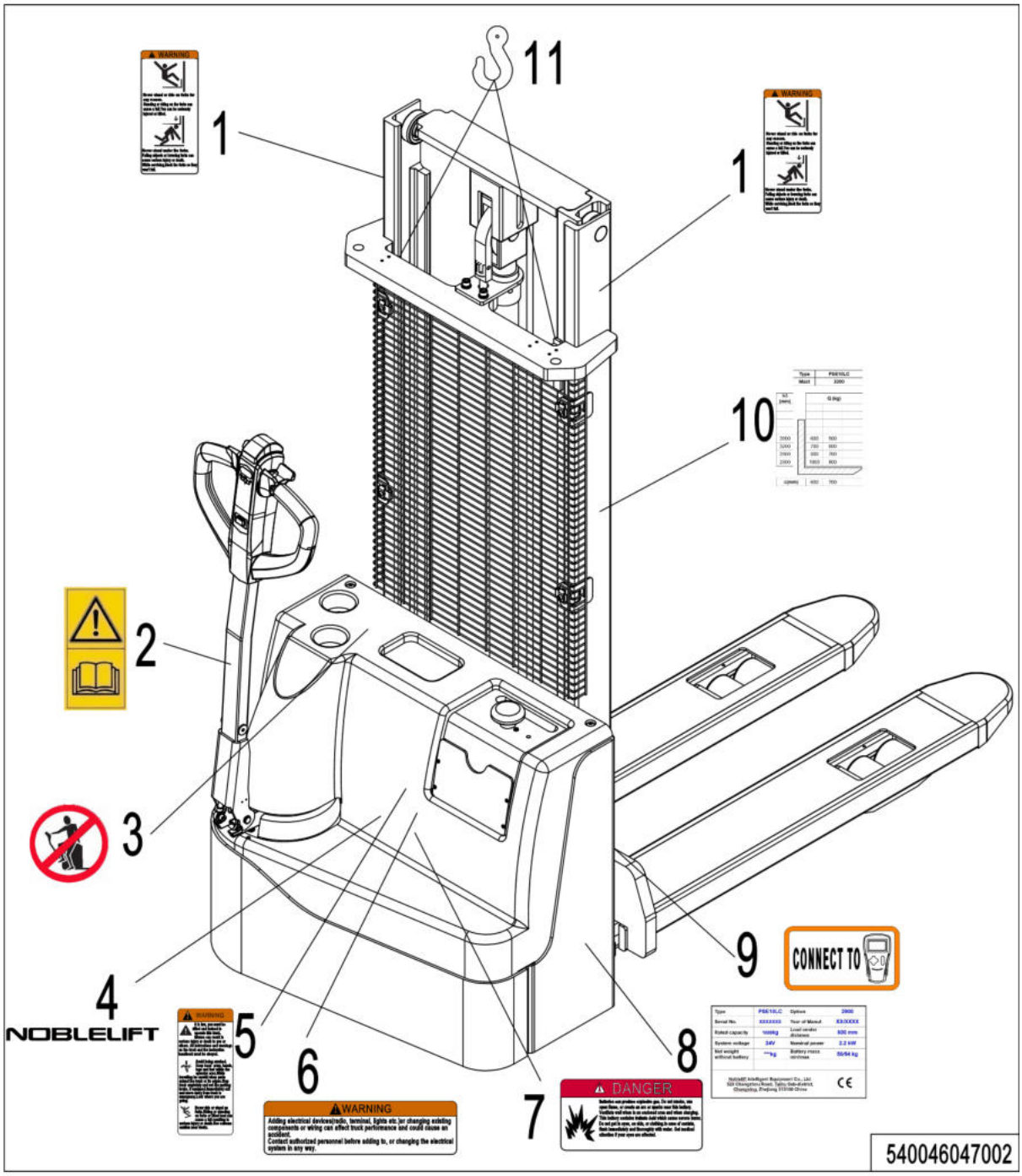

02 Label and Decal(USA)（540046047002）

No.	Item Code	Mark	Item Description	Qty.	Substitute	Note
1	941200100016		Label	1		
2	941200300002		Label	1		
3	941200100003		Label	1		
4	941200500007		Label	1		
5	941200100009		Label	1		
6	941200100010		Label	1		
7	941200100013		Label	1		
8	537047502001		Truck data plate	1		
9	941200300019		Label	1		
10	537047502002		Load Capacity Diagram	1		
11	941200300001		Label	2		

Appendix

01 Electrical Circuit Diagram（537046045501）

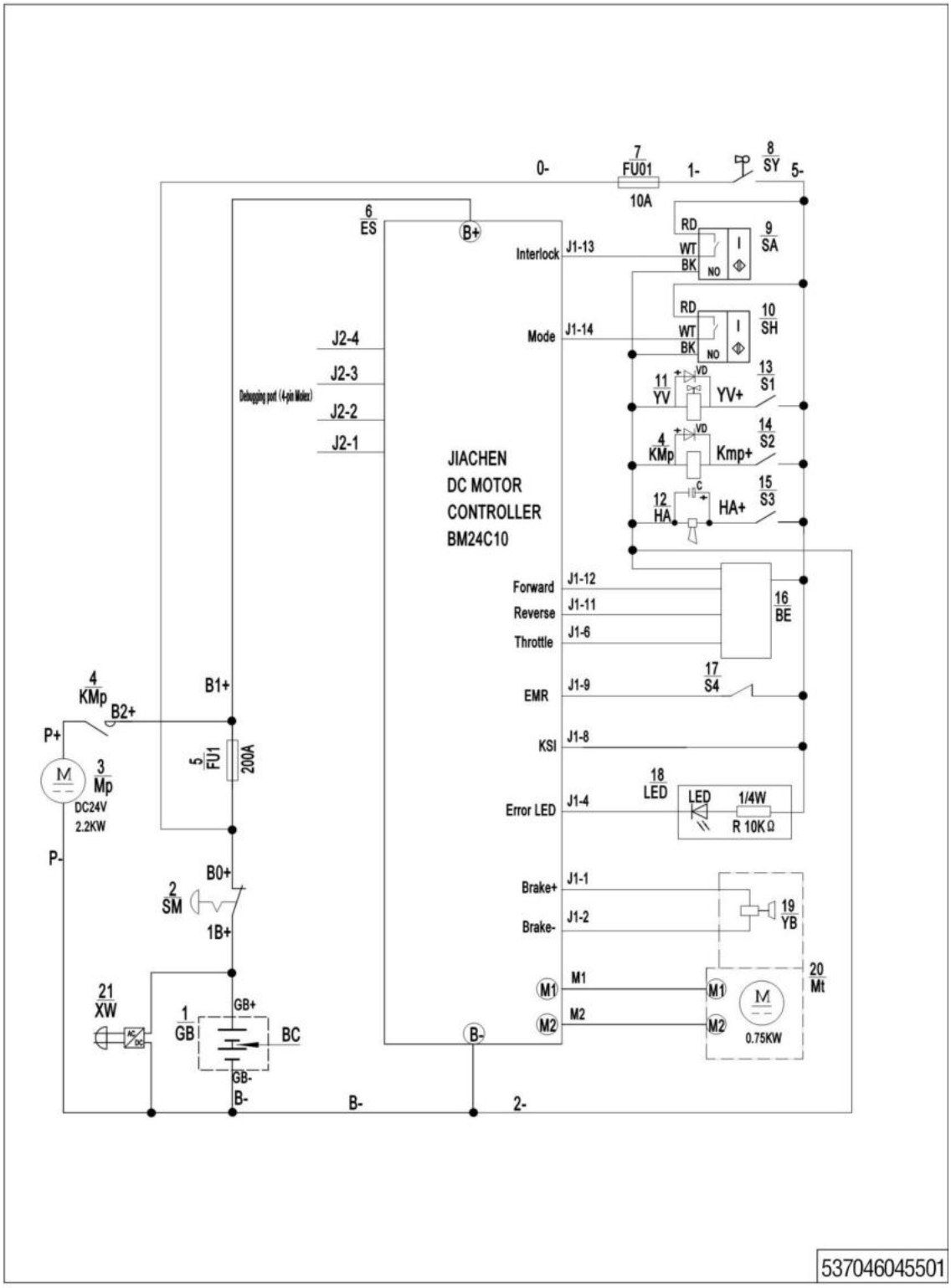

03 Hydraulic Circuit Diagram（537046045503）

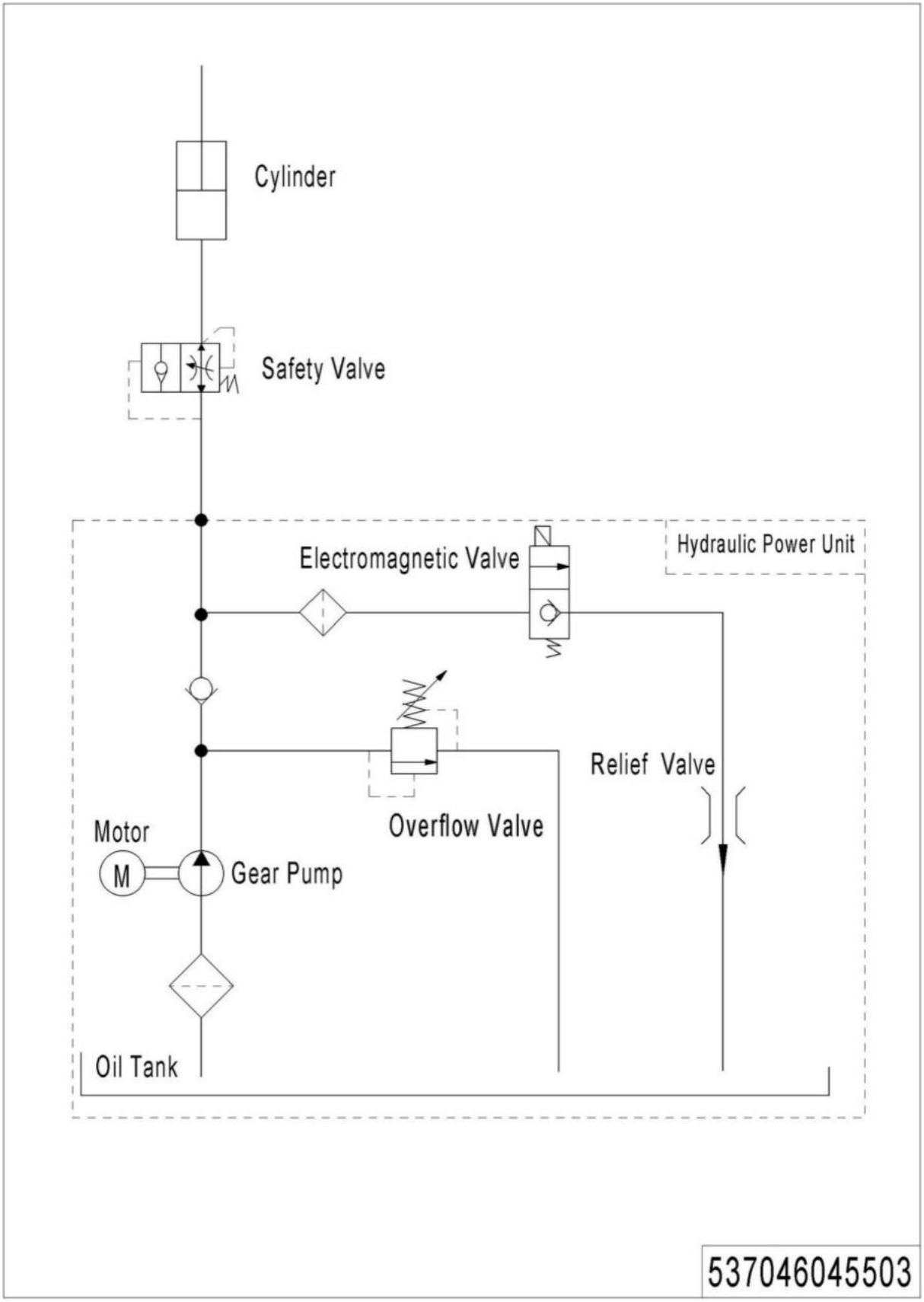

04 Consumable Parts List

No.	Item Code	Item Description	Chapter/ Section/ Number
1	537098510015	Carbon Brush	Chapter1/02/1.01
2	910700200053	Bearing	Chapter1/02/3
3	961000700008	Tyre	Chapter1/02/4
4	532298510026	Carbon Brush	Chapter2/02/1.01
5	910700200021	Bearing	Chapter3/04/2
6	508011010001	Gas Spring	Chapter4/01/5
7	910700200019	Bearing	Chapter4/02/5.01
8	940300300005	WheelΦ80x70	Chapter4/02/5.02
9	910700200019	Bearing	Chapter4/03/2.01
10	940300300023	WheelΦ80x93	Chapter4/03/2.02
11	910700700011	Bearing	Chapter4/04/8
12	940300300030	WheelΦ100x50	Chapter4/04/10.01
13	910700200019	Bearing	Chapter4/04/10.02
14	910700600001	Bearing	Chapter4/04/15