Print Number: Print Date:

FORSHINE 永恒

Electric Pallet Stacker PSE15L-C

PARTS MANUAL

537046020101

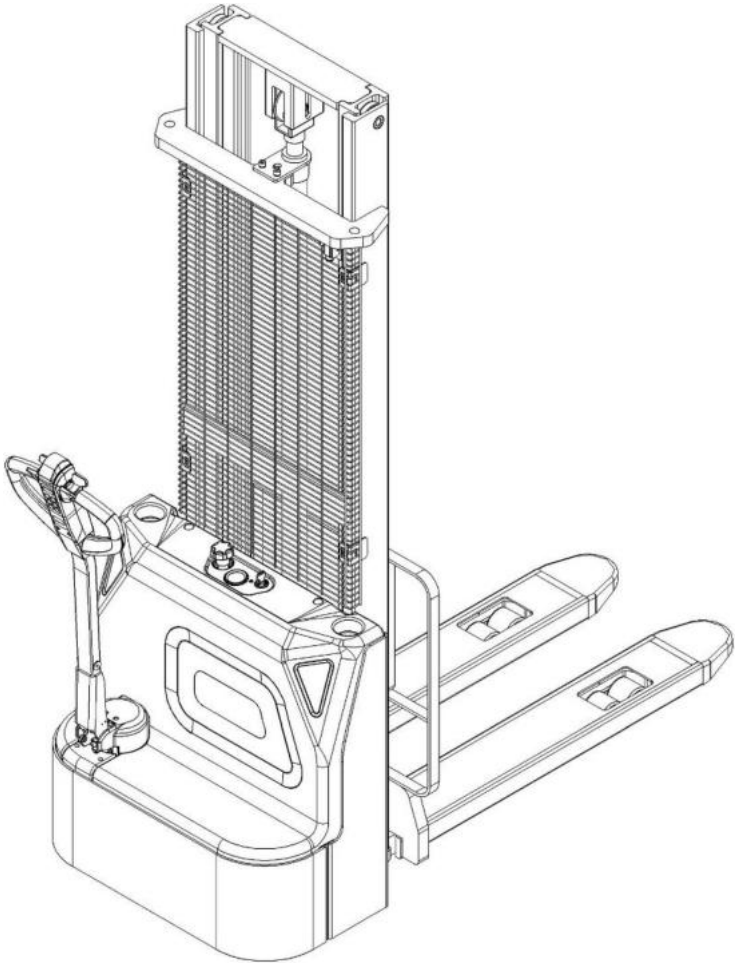

Version：V02

Truck Identification Number From:

Parts Manual PSE15L-C-PM02EN

Please order parts from authorized dealers of Noblelift Intelligent Equipment Co., LTD.

In order to avoid wrong delivery, all the orders for spare parts should specify the following items:

- Truck model, identification number and manufacture year.
- Orders for spare parts of mast, hydraulic transmission unit, steering axle, motor, etc. shall indicate the manufacture number of these parts.
- Codes for Noblelift spare parts are shown in the table of parts manual. Please also pay attention to the description of supply status, order quantity, etc. (check the number listed in "Mark" column of the parts manual).

"Mark" Column:

The unmarked indicates the parts are in short supply cycle.

Number 1: supply as package. Indicating these that parts are small parts and seal parts, which are supplied in package unit and in short supply cycle.

Number 2: supply with constraints. Indicating that these spare parts are not in stock and will be prepared for production after receiving the order from customers, which are in long supply cycle.

Number 3: phasing-out supply. Indicating that these parts will be replaced by new parts due to technical improvements and the current stock will not be available when these parts run out. Please check the description of technical improvements notice.

Number 4: supply as assembly. Indicating that these parts are assembly parts defined by manufacture process, which cannot be supplied as a single part.

Number 5: check other tables.

This parts manual is the property of Noblelift and can be shared under the confidential agreement only, Noblelift has the right to claim for compensation of any unauthorized use. Copy without permission is not allowed. Figures in the manual are not limited by the original design. Noblelift Intelligent Equipment Co., LTD reserves the right to improve the products for continuous technology progress.

Table of Contents

Chapter 1: Drive System....4
01 Drive Unit（537046013501）....4
02 Drive Assembly（537046013502）....6
Chapter 2: Hydraulic System....8
01 Hydraulic Components（536846024001）....8
02 Hydraulic Unit（532246023501）....10
Chapter 3: Truck Frame....12
01 Fork Carriage（531846038001）....12
02 Chassis (Single Stage Mast)（537046021501）....14
02 Chassis (Single Stage Mast)（537046021501）Continuation....16
03 Chassis (Two Stage Mast)（537046021502）....18
03 Chassis (Two Stage Mast)（537046021502）Continuation....20
04 Inner Mast Assembly（537046044001）....22
Chapter 4: Steering System, Braking System, Wheels....24
01 Tiller Unit（537046011001）....24
02 Tiller（537046011002）....26
03 Load Roller(Tandem Rollers)（532646017001）....28
04 Load Roller(Single Roller)（537046017001）....30
05 Caster（532246016501）....32
Chapter 5: Electrical Parts....34
01 Display Assembly（537046010001）....34
02 Traction Battery（537046037001）....36
03 Wire Harness（537046033001）....38
03 Wire Harness（537046033001）Continuation....40
Chapter 6: Special Parts....42
01 Load Backrest(Optional)（532646040501）....42
Chapter 7: Others....44
01 Label and Decal(EU)（537046047003）....44
02 Label and Decal(USA)（537046047004）....46
Appendix....48
01 Electrical Circuit Diagram（537046045501）....48
02 Hydraulic Circuit Diagram（537046045504）....49
03 Consumable Parts List....50

Chapter 1: Drive System

01 Drive Unit（537046013501）

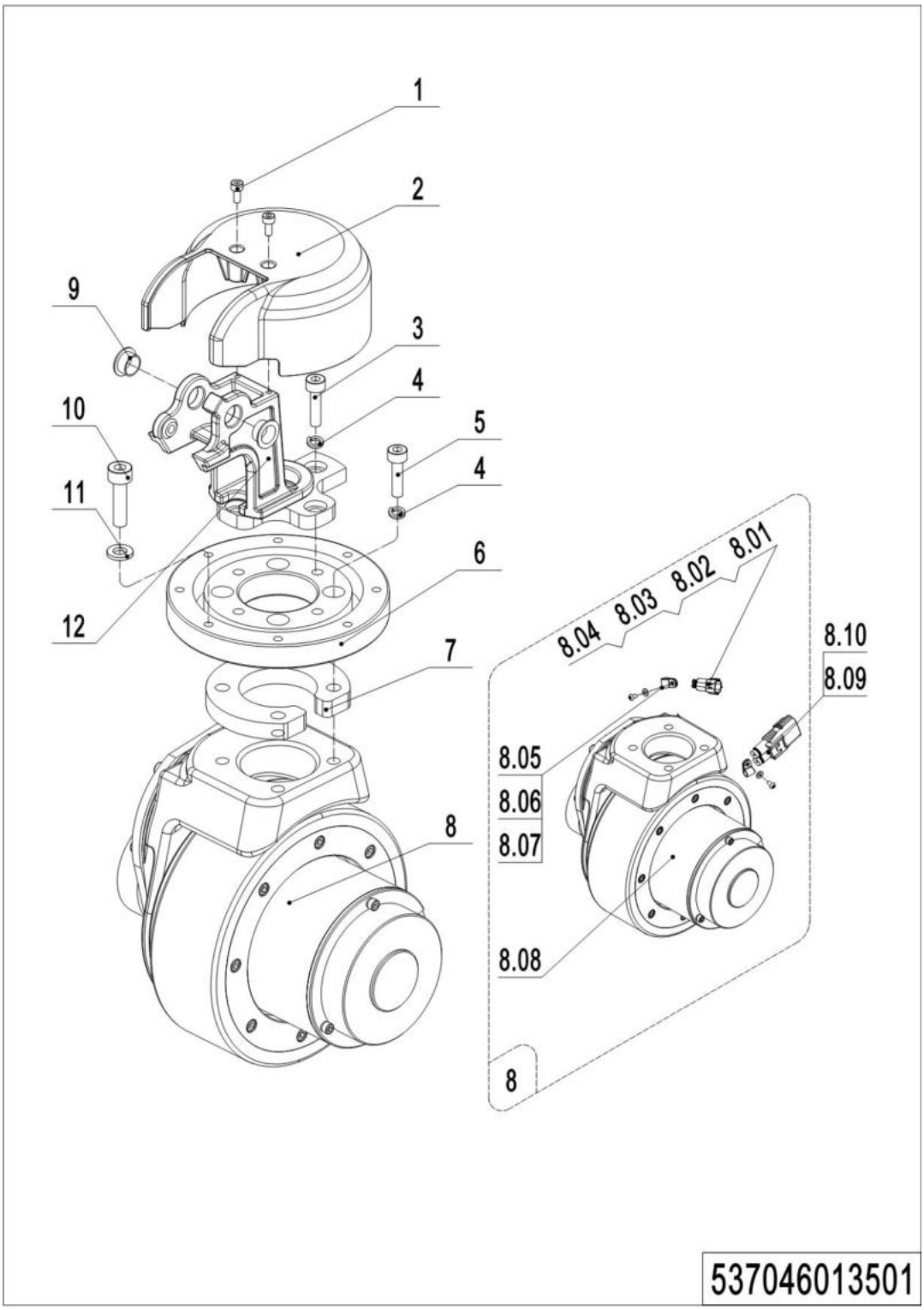

01 Drive Unit（537046013501）

No.	Item Code	Mark	Item Description	Qty.	Substitute	Note
1	910200200022	1	Screw	2		
2	536813520000	2	Protective Cover	1		
3	910200200076	1	Screw	4		
4	910400500007	1	Spring Washer	8		
5	910200200080	1	Screw	4		
6	532213520001		Slewing Bearing	1		
7	531813520005	2	Plate	1		
8	537098510000	2	Drive Kits	1		
8.01	920400200004	1	Connector	1		
8.02	920400200003	1	Connector	1		
8.03	920400200017	1	Connector	1		
8.04	920400200018	1	Connector	1		
8.05	910200700001	1	Screw	1		
8.06	910400100003	1	Flat Washer	1		
8.07	921300200001	1	Cable Clamp	1		
8.08	----------	5	Drive Assembly	1		Check 537046013502
8.09	920400200152	1	Connector	1		
8.10	920400200150	1	Connector	1		
9	940500200001	1	Bushing	2		
10	910200200061	1	Screw	8		
11	910400100006	1	Flat Washer	8		
12	536813510000	2	Bracket	1		

02 Drive Assembly（537046013502）

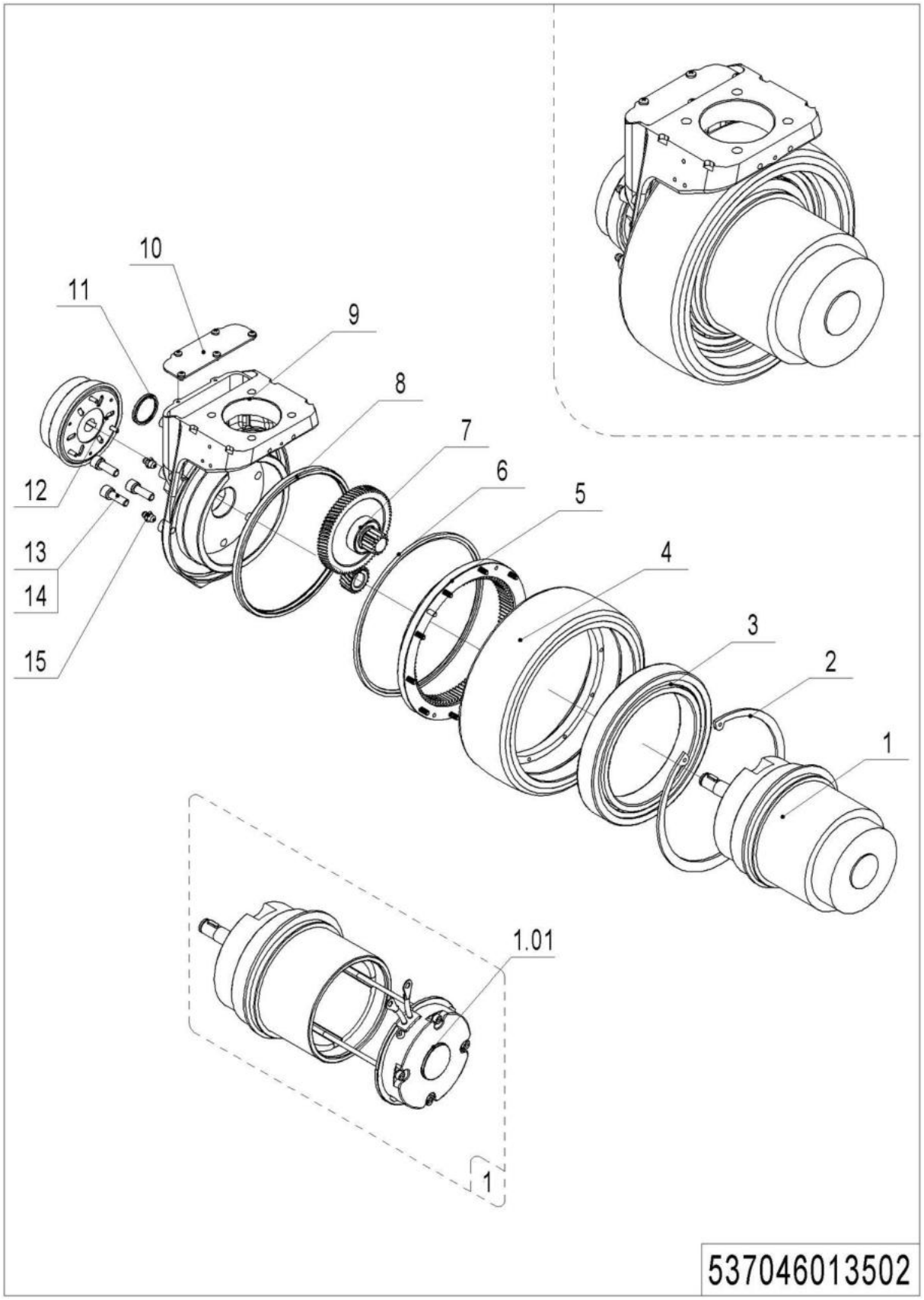

02 Drive Assembly（537046013502）

No.	Item Code	Mark	Item Description	Qty.	Substitute	Note
1	537098510011	2	Motor	1		
1.01	537098510015	2	Carbon Brush	1		
2	910401400015	1	Circlip	1		
3	910700200053		Bearing	1		
4	961000700008	2	Tyre	1		
5	961000700007	2	Gear	1		
6	961000700009	1	Wiper Seal	1		
7	537098510012	2	Gear Components	1		
8	961000700013	1	Oil Seal	1		
9	537098510013	2	Gearbox	1		
10	537098510014	2	Close PlateAssembly	1		
11	961000700005	2	Cover	1		
12	961000700011	2	Brake	1		
13	910200200147	1	Screw	5		
14	910400500019	1	Spring Washer	5		
15	911200100003	1	Oil Cup	2		

Chapter 2: Hydraulic System

01 Hydraulic Components（536846024001）

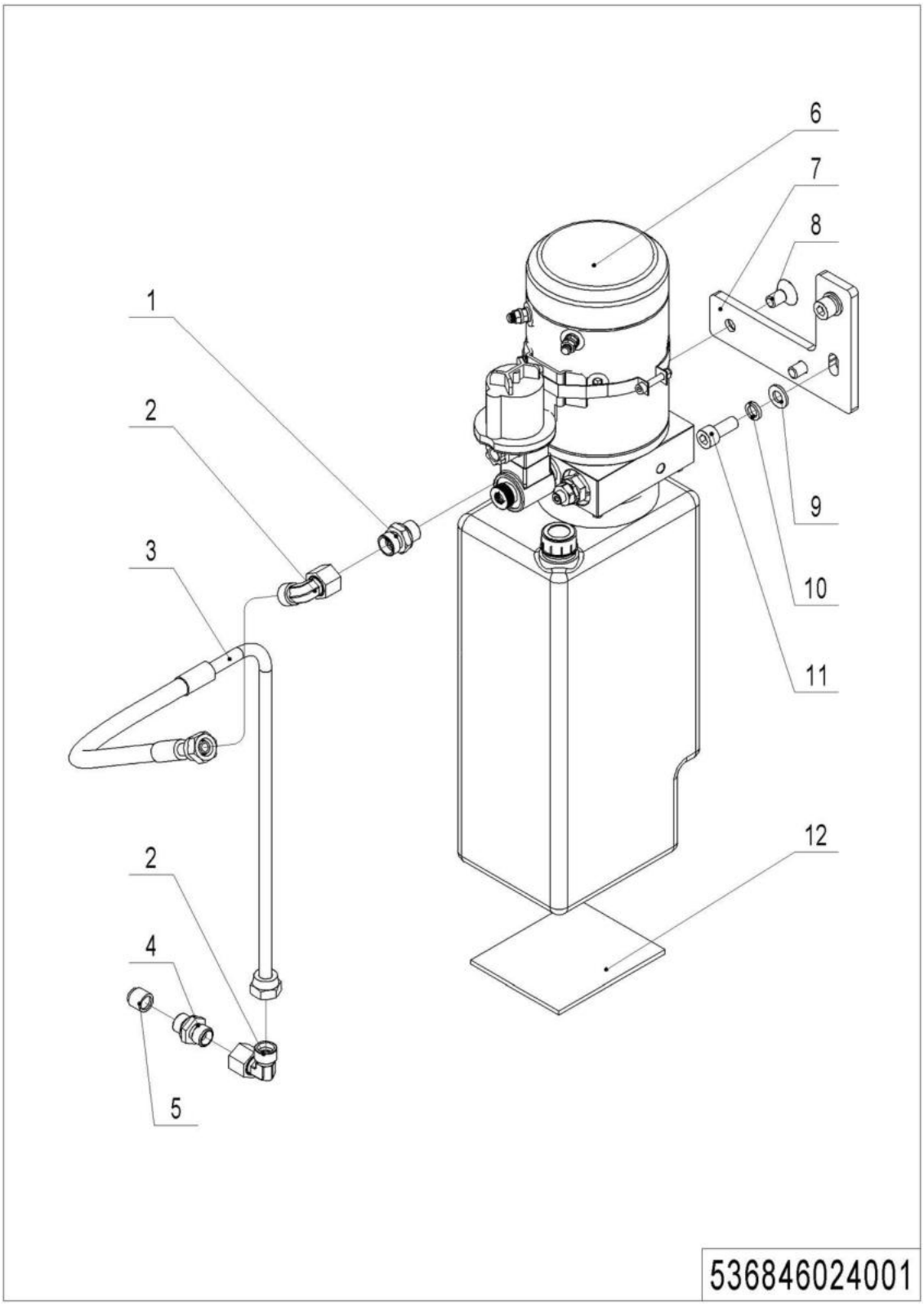

1= Supply as package. 2= Supply with constraints. 3= Phasing-out supply. 4= Supply as assembly. 5= Check other tables.

01 Hydraulic Components（536846024001）

No.	Item Code	Mark	Item Description	Qty.	Substitute	Note
1	950400300007		Joint	1		
2	950400200003		Joint	2		
3	536824010000	2	Hose	1		
4	950400400003		Joint	1		
5	950600300001		Safety Valve	1		
6	----------	5	Hydraulic Unit	1		Check 532246023501
7	536823520000	2	Mounting Plate	1		
8	910200400035	1	Screw	2		
9	910400100007	1	Flat Washer	2		
10	910400500007	1	Spring Washer	2		
11	910200200076	1	Screw	2		
12	532223520002		Crash Pad	1		

02 Hydraulic Unit（532246023501）

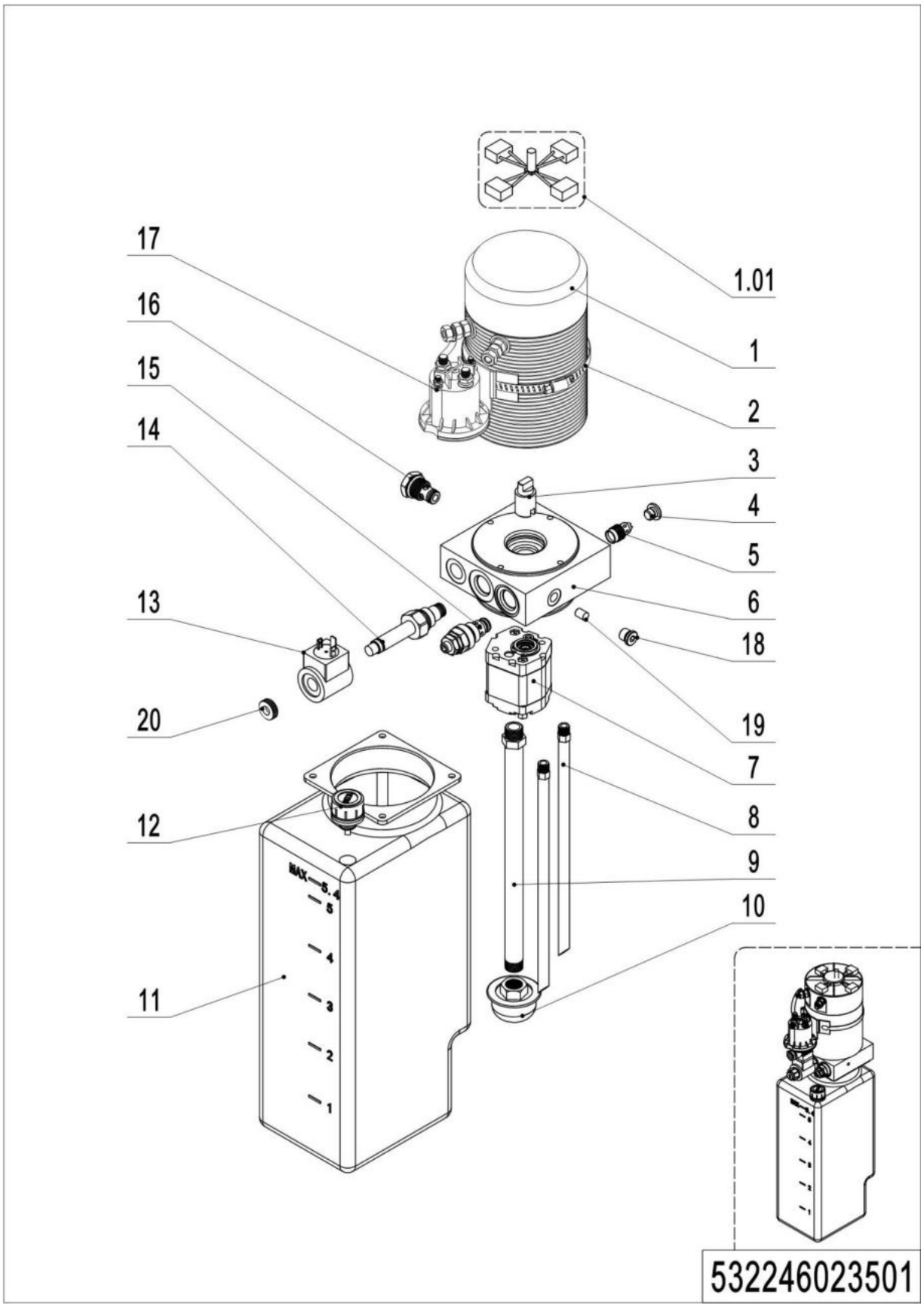

1= Supply as package. 2= Supply with constraints. 3= Phasing-out supply. 4= Supply as assembly. 5= Check other tables.

02 Hydraulic Unit（532246023501）

No.	Item Code	Mark	Item Description	Qty.	Substitute	Note
--	950900100102		Pump Unit	1		
1	532298510056	2	Motor	1		
1.01	532298510058	2	Carbon Brush	1		
2	532298510040	2	Hose Clamp	1		
3	532298520007	2	Coupling	1		
4	532298520003	2	End Cap	1		
5	532298510059	2	Valve	1		
6	532298510060	2	Valve Block	1		
7	532298510057	2	Gear pump	1		
8	532298520004	2	Pipe	2		
9	532298520005	2	Oil Tube	1		
10	532298510031	2	Filter	1		
11	532298510029	2	Tank	1		
12	532298510030	2	Cap-Tank	1		
13	532298510034	2	Coil	1		
14	532298510033	2	Magnetic Valve	1		
15	532298510044	2	Overflow valve	1		
16	532298510028	2	Check Valve	1		
17	532298510036	2	Switch	1		
18	532298510061	2	End Cap	1		
19	532298520010	2	Throttle screw	1		
20	532298520011	2	Nut	1		

Chapter 3: Truck Frame

01 Fork Carriage（531846038001）

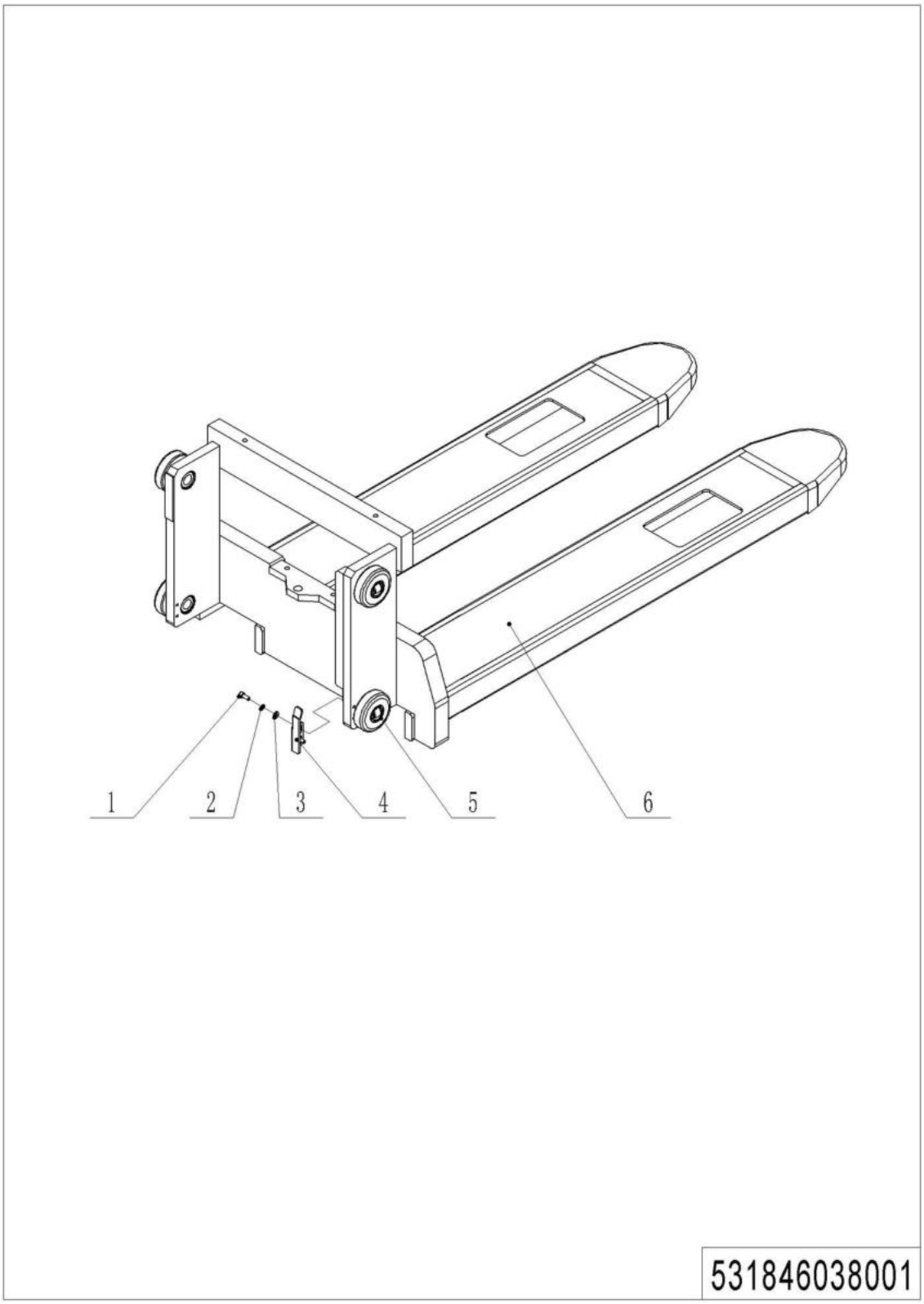

01 Fork Carriage（531846038001）

No.	Item Code	Mark	Item Description	Qty.	Substitute	Note
1	910200200035	1	Screw	2		Single mast
2	910400500005	1	Spring Washer	2		Single mast
3	910400100005	1	Flat Washer	2		Single mast
4	531838020010	2	Stop Plate	1		Single mast
5	940200300008		Compound Roller	4		
6	531838010002	2	Fork(,570x1150)	1		Single mast
6	531838010003	2	Fork(,685x1150)	1		Single mast
6	531838010000	2	Fork(570x1150)	1		Two-stage mast
6	531838010001	2	Fork(685x1150)	1		Two-stage mast

02 Chassis (Single Stage Mast)（537046021501）

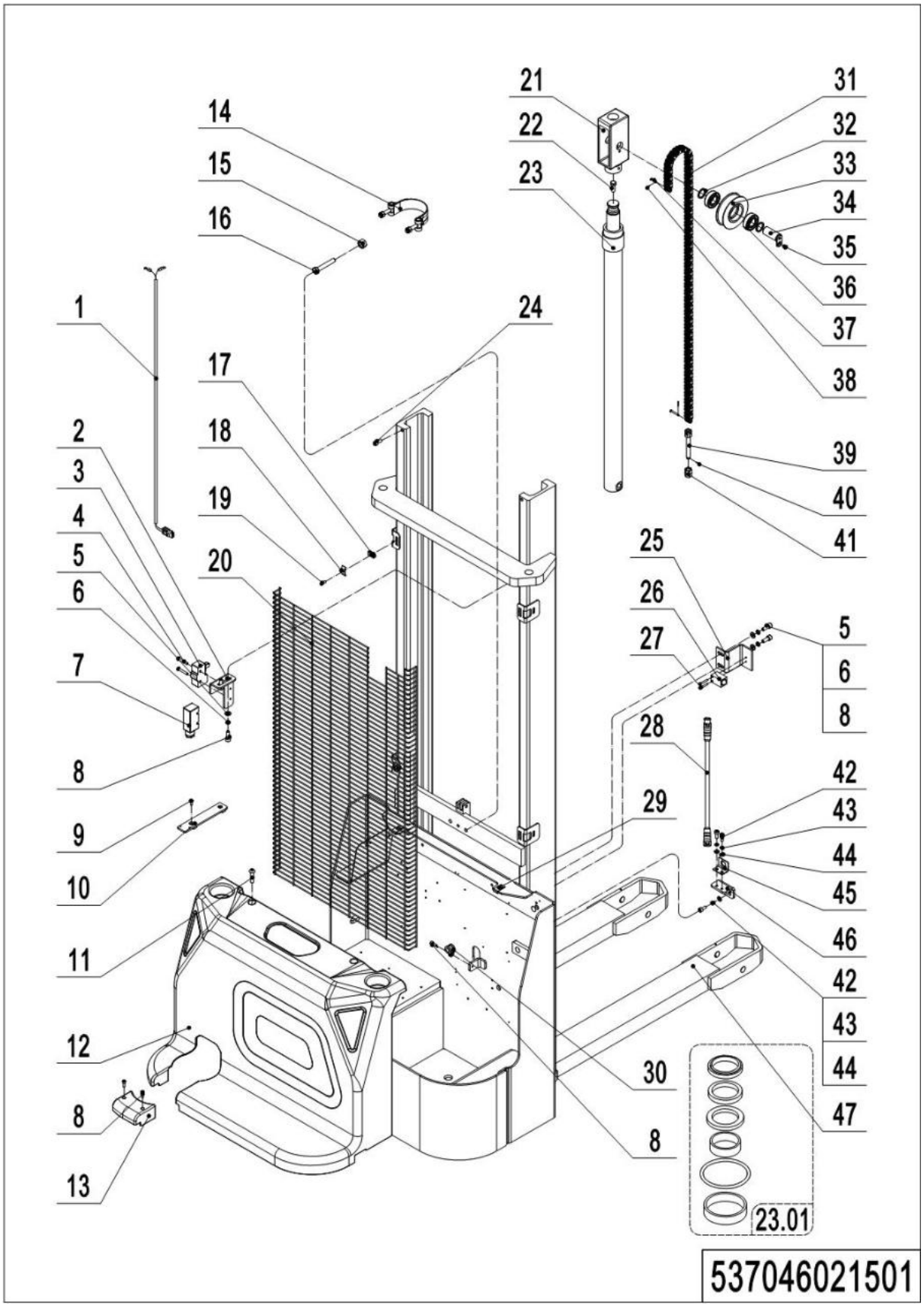

02 Chassis (Single Stage Mast)（537046021501）

No.	Item Code	Mar.	Item Description	Qty.	Substitute	Note
1	537033010008		Wire Harness	1		
2	531821520006		Fixing Plate	1		
3	920200300001		Microswitch	1		
4	910200500027	1	Screw	2		
5	910400100005	1	Flat Washer	4		
6	910400500005	1	Spring Washer	4		
7	920200300008		Protective Cover	1		
8	910200200035	1	Screw	7		
9	910200400012	1	Screw	2		
10	536821510010		Bracket	1		
11	910200300032	1	Screw	2		
12	536821520023		Cover	1		
13	536821520022		Close Plate	1		
14	940800600006		Hoop	1		
15	910300100007	1	Nut	1		
16	910100300039	1	Bolt	1		
17	940400400001	1	Cage Nut	4		
18	320443020321		Press Plate	4		
19	910200300018	1	Screw	4		
20	537021520013		Protective Frame	1		1600
20	537021520014		Protective Frame	1		2000
21	531821520028		Yoke	1		
22	910100300049	1	Bolt	1		
23	531821510015		Cylinder	1		1600
23	531821510016		Cylinder	1		2000
23.01	532698510001	1	Seal Kit	1		
24	910200200075	1	Screw	2		
25	532021520053		Fixing Plate	1		

02 Chassis (Single Stage Mast)（537046021501）Continuation

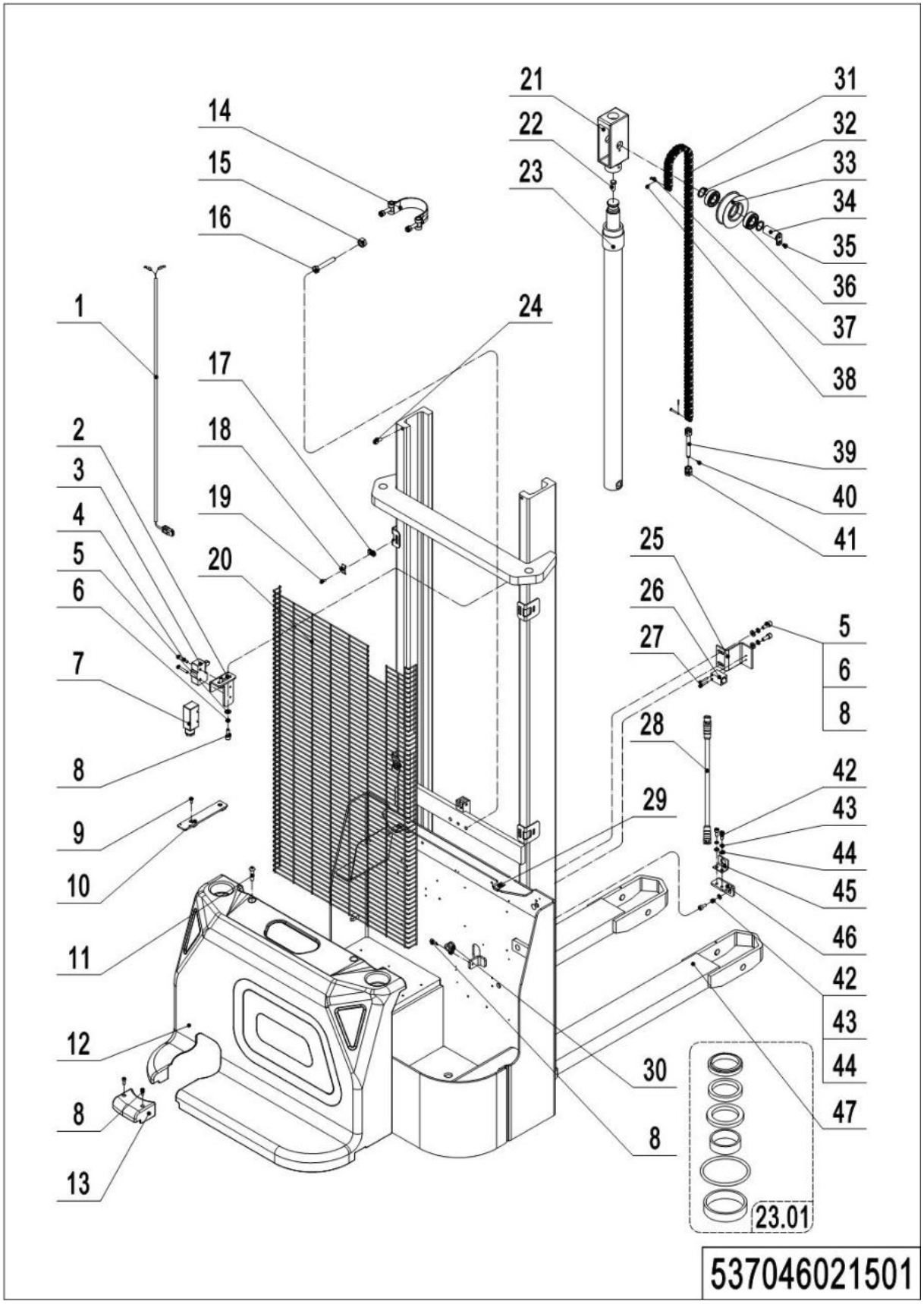

02 Chassis (Single Stage Mast)（537046021501）Continuation

No.	Item Code	Mark	Item Description	Qty.	Substitute	Note
26	920200400030		Proximity Switch	1		
27	910200500015	1	Screw	2		
28	531833010002		Wire	1		
29	940400400003	1	Cage Nut	2		
30	951000100001		Hose Clamp	1		
31	532643510087		Chain	1		1600
31	531821510014		Chain	1		2000
32	940600500008		Washer	2		
33	940200400003		Sprocket	1		
34	532644010035		Pin	1		
35	910200400016	1	Screw	1		
36	910700200021		Bearing	2		
37	941100800008		Pin	2		
38	910600600015		Cotter Pin	2		
39	532644020096		Chain Anchor	1		
40	910600600037		Cotter Pin	1		
41	910300200008	1	Nut	2		
42	910200200022	1	Screw	4		
43	910400500004	1	Spring Washer	4		
44	910400100004	1	Flat Washer	4		
45	921300300003		Holder	1		
46	531821520031		Mounting Plate	1		
47	537021510010	2	Chassis(1600,570x1150	1		
47	537021510011	2	Chassis(2000,570x1150	1		
47	537021510012	2	Chassis(1600,685x1150	1		
47	537021510013	2	Chassis(2000,685x1150	1		

03 Chassis (Two Stage Mast)（537046021502）

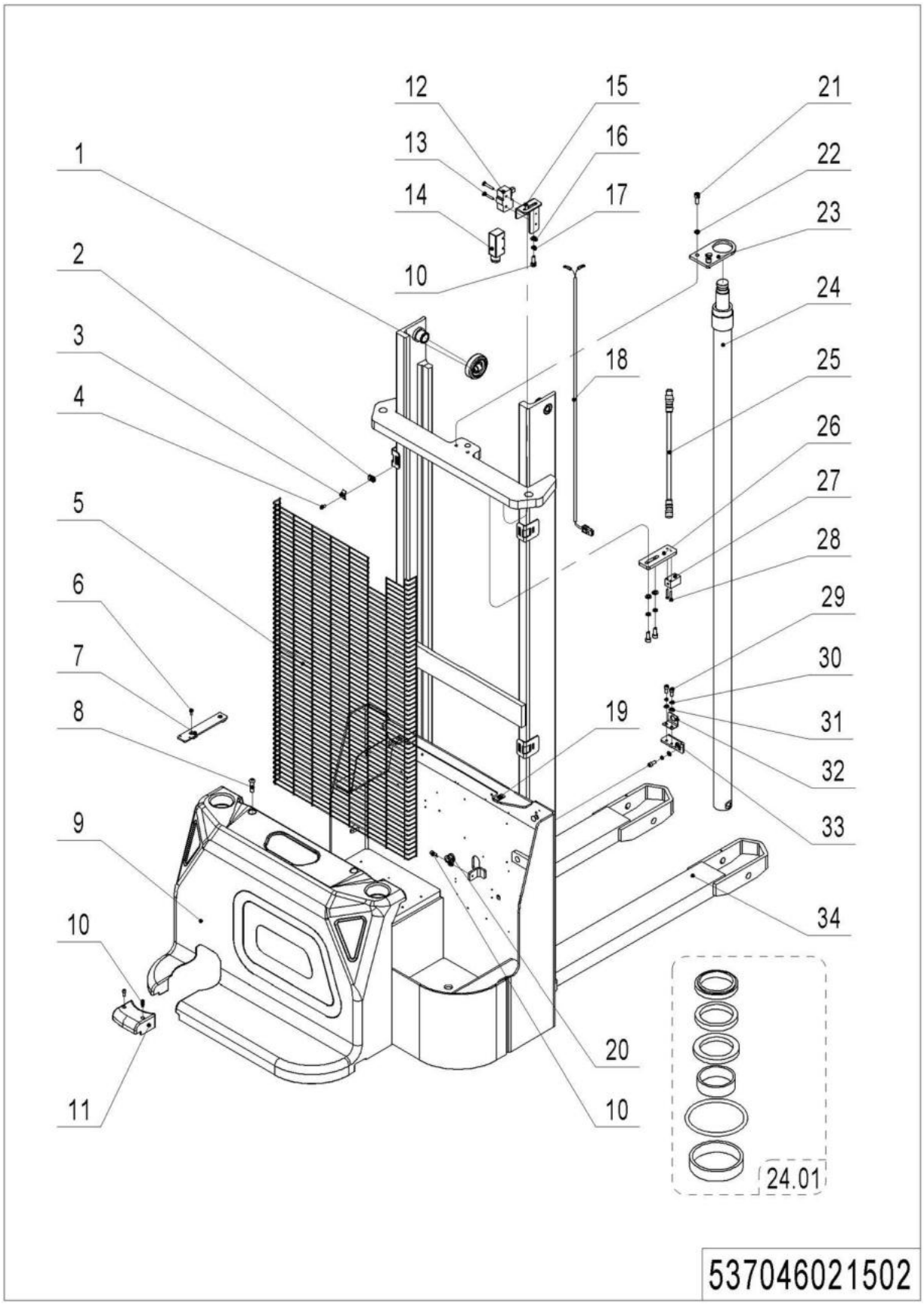

03 Chassis (Two Stage Mast)（537046021502）

No.	Item Code	Ma	Item Description	Qty.	Substitute	Note
1	940200300007		Compound Roller	2		
2	940400400001	1	Cage Nut	4		
3	320443020321	2	Press Plate	4		
4	910200300018	1	Screw	4		
5	537021520009	2	Protective Frame	1		2600
5	537021520010	2	Protective Frame	1		2900
5	537021520011	2	Protective Frame	1		3200
5	537021520012	2	Protective Frame	1		3600
6	910200400012	1	Screw	2		
7	536821510010	2	Bracket	1		
8	910200300032	1	Screw	2		
9	536821520023	2	Cover	1		
10	910200200035	1	Screw	7		
11	536821520022	2	Close Plate	1		
12	920200300001		Microswitch	1		
13	910200500027	1	Screw	2		
14	920200300008		Protective Cover	1		
15	531821520006	2	Fixing Plate	1		
16	910400100005	1	Flat Washer	4		
17	910400500005	1	Spring Washer	4		
18	537033010008	2	Wire Harness	1		
19	940400400003	1	Cage Nut	2		
20	951000100001	1	Hose Clamp	1		
21	910200200076	1	Screw	2		
22	910400500007	1	Spring Washer	2		
23	532644020097	2	Fixing Plate	1		
24	537021510020	2	Cylinder	1		2600
24	532644010031	2	Cylinder	1		2900
24	532644010037	2	Cylinder	1		3200
24	532644010041	2	Cylinder	1		3600

03 Chassis (Two Stage Mast)（537046021502）Continuation

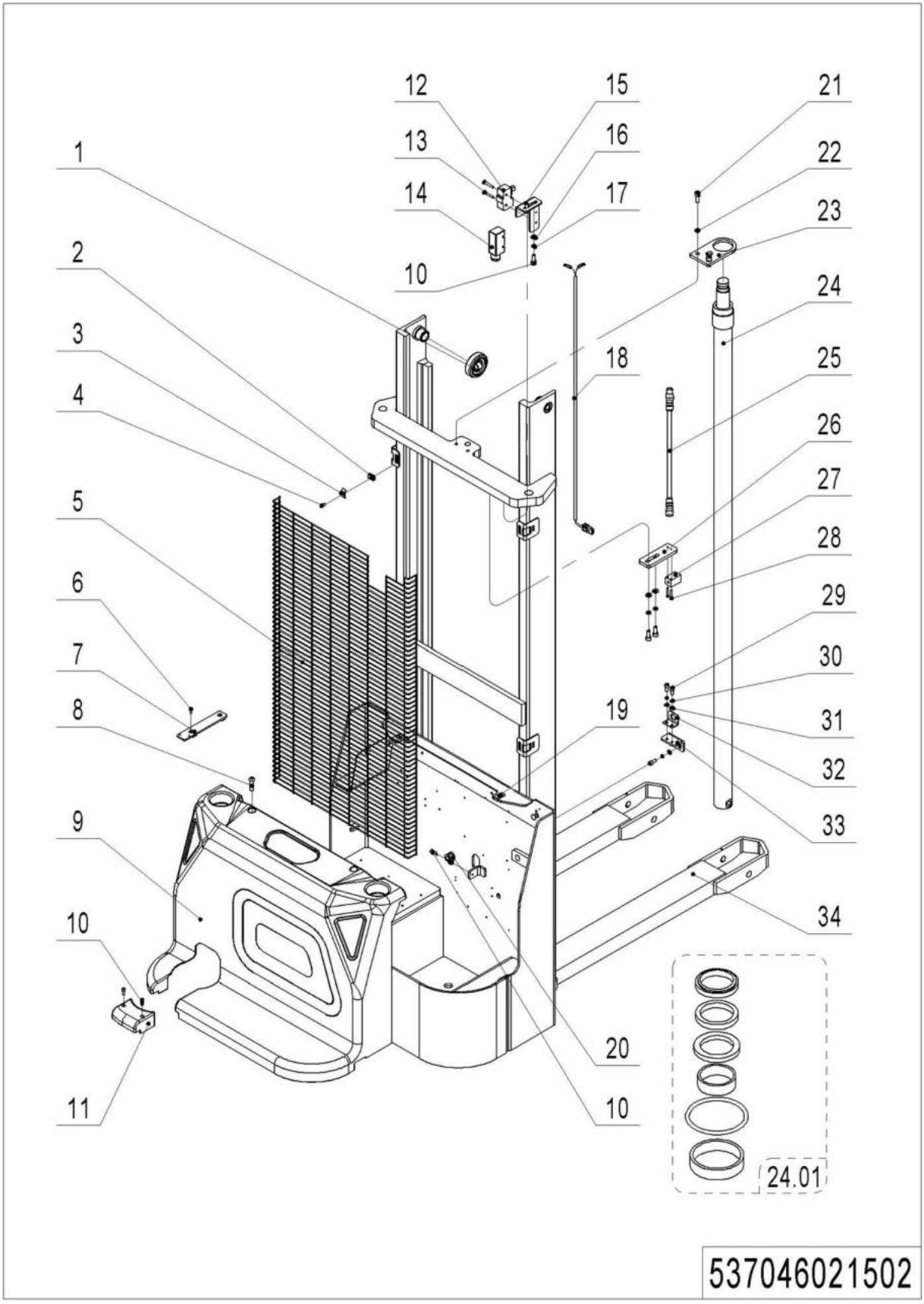

03 Chassis (Two Stage Mast)（537046021502）Continuation

No.	Item Code	Ma	Item Description	Qty.	Substitute	Note
24.01	532698510001	1	Seal Kit	1		
25	531833010002	2	Wire	1		
26	531821520007	2	Fixing Plate	1		
27	920200400030		Proximity Switch	1		
28	910200500015	1	Screw	2		
29	910200200022	1	Screw	4		
30	910400500004	1	Spring Washer	4		
31	910400100004	1	Flat Washer	4		
32	921300300003		Holder	1		
33	531821520031		Mounting Plate	1		
34	537021510006	2	Chassis(2600,570x1150)	1		Two-stage mast
34	537021510000	2	Chassis(2900,570x1150)	1		Two-stage mast
34	537021510001	2	Chassis(3200,570x1150)	1		Two-stage mast
34	537021510002	2	Chassis(3600,570x1150)	1		Two-stage mast
34	537021510007	2	Chassis(2600,685x1150)	1		Two-stage mast
34	537021510003	2	Chassis(2900,685x1150)	1		Two-stage mast
34	537021510004	2	Chassis(3200,685x1150)	1		Two-stage mast
34	537021510005	2	Chassis(3600,685x1150)	1		Two-stage mast

04 Inner Mast Assembly（537046044001）

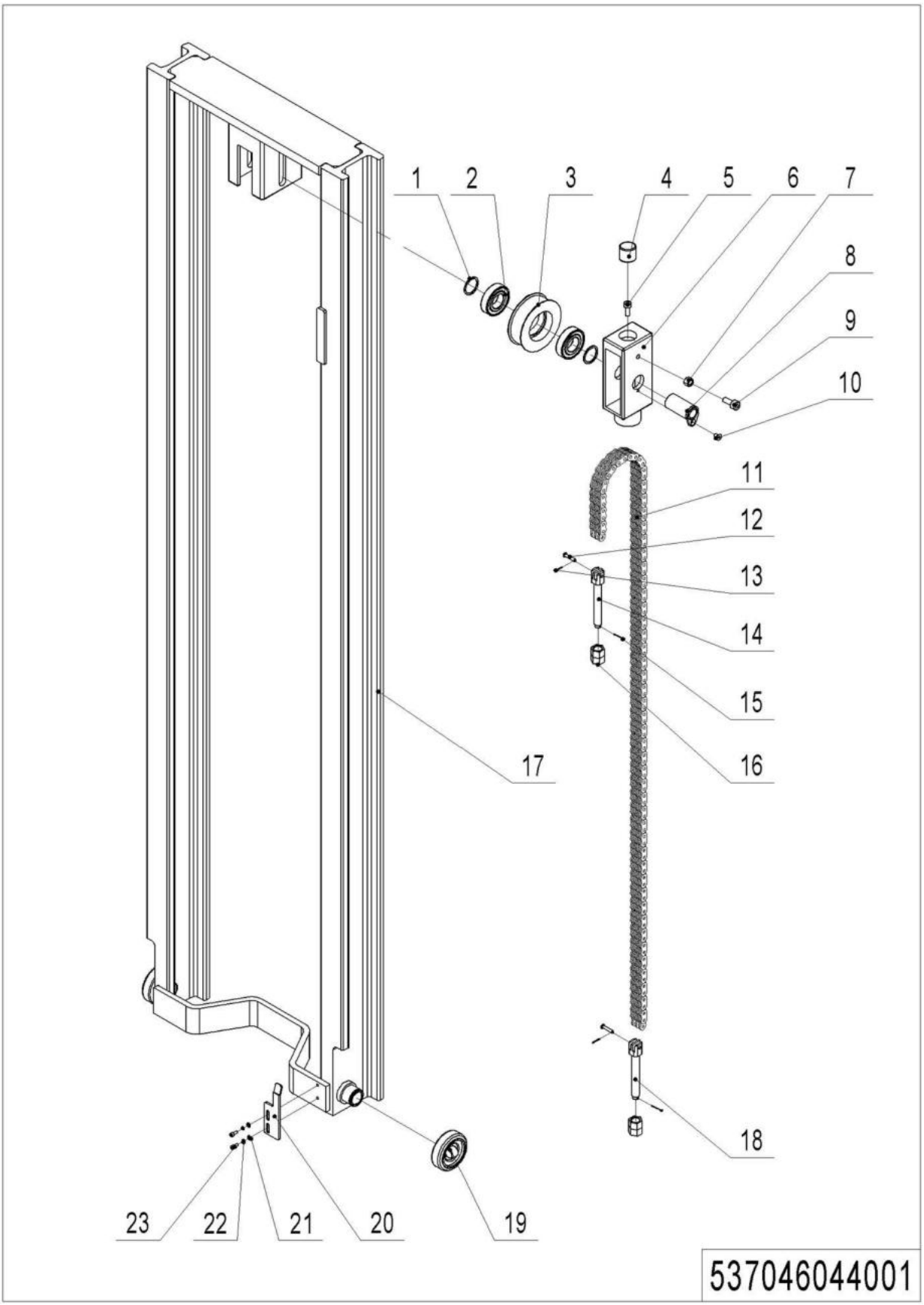

04 Inner Mast Assembly（537046021501）

No.	Item Code	Ma	Item Description	Qty.	Substitute	Note
1	940600500008	1	Washer	2		
2	910700200021		Bearing	2		
3	940200400003		Sprocket	1		
4	532644020094		Crash Pad	1		
5	910100300049	1	Bolt	1		
6	531821520028	2	Yoke	1		
7	910300300005	1	Nut	2		
8	532644010035		Pin	1		
9	910200200075	1	Screw	2		
10	910200400014	1	Screw	1		
11	537044010010	2	Chain	1		2600
11	532644010083	2	Chain	1		2900
11	532644010068	2	Chain	1		3200
11	532644010069	2	Chain	1		3600
12	941100800008	1	Pin	2		
13	910600600015	1	Cotter Pin	2		
14	532644020096		Chain Anchor	1		
15	910600600037	1	Cotter Pin	2		
16	910300200008	1	Nut	4		
17	537044010003	2	Inner Mast(2600)	1		
17	531821510005	2	Inner Mast(2900)	1		
17	531821510003	2	Inner Mast(3200)	1		
17	531821510000	2	Inner Mast(3600)	1		
18	532643520137		Chain Anchor	1		
19	940200300007		Compound Roller	2		
20	531821520001	2	Stop Plate	1		
21	910400100005	1	Flat Washer	2		
22	910400500005	1	Spring Washer	2		
23	910200300017	1	Screw	2		

Chapter 4: Steering System, Braking System, Wheels

01 Tiller Unit（537046011001）

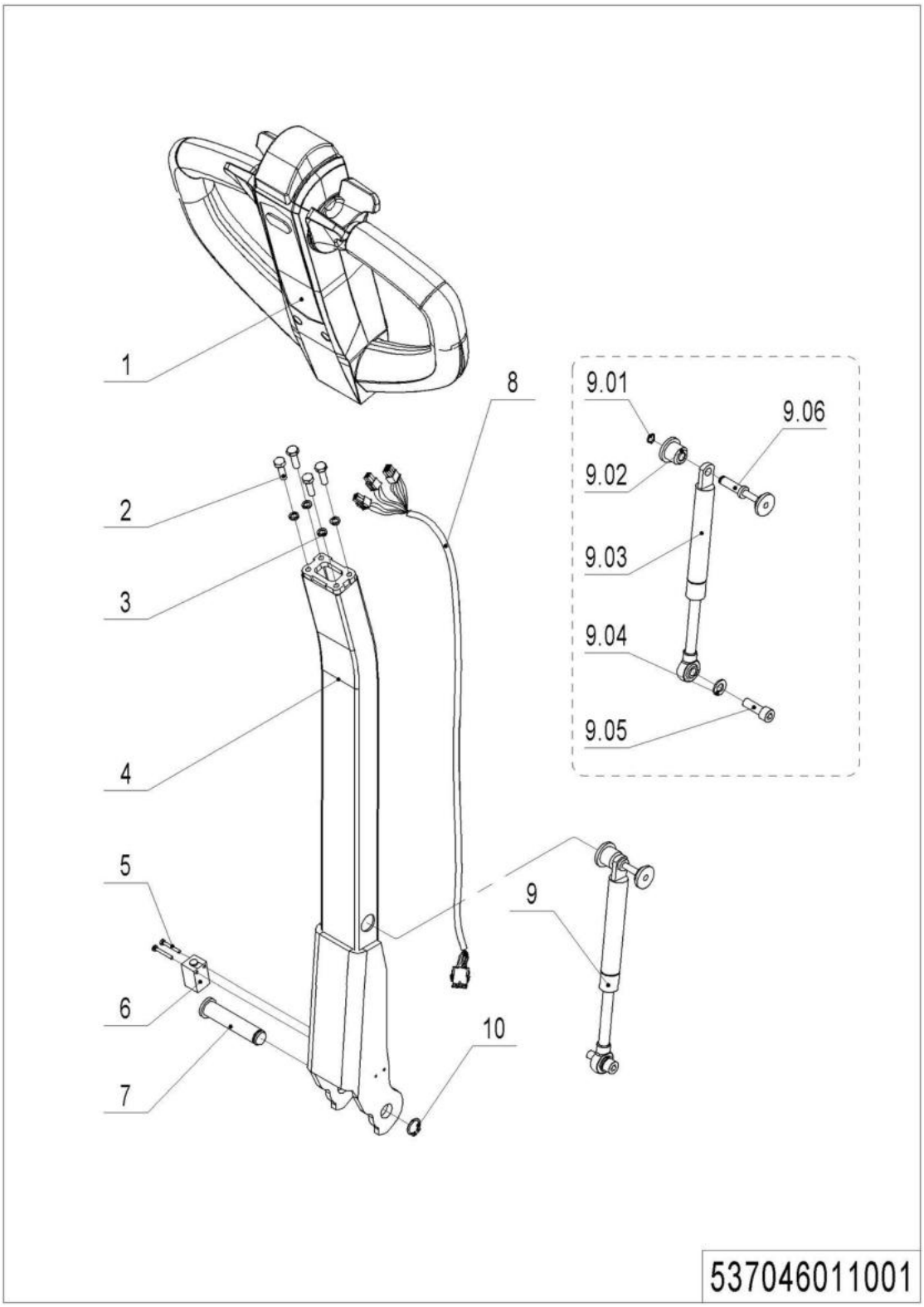

01 Tiller Unit（537046011001）

No.	Item Code	Mark	Item Description	Qty.	Substitute	Note
1	----------	2	Tiller	1		Check 537046011002
2	910100300011	1	Bolt	4		
3	910400500005	1	Spring Washer	4		
4	536811010000	2	Tiller	1		
5	941101100001	1	Screw	2		
6	920200400033		Proximity Switch	1		
7	508011020004		Pin	1		
8	537033010002	2	Wire Harness	1		
9	508098510084		Gas Spring Kit	1		
9.01	910401300001	1	Circlip	1		
9.02	508011020005		Fixing Base	1		
9.03	532211020003		Gas Spring	1		
9.04	910400100006	1	Flat Washer	1		
9.05	910200200058	1	Screw	1		
9.06	508011010002		Pin	1		
10	910401300006	1	Circlip	1		

02 Tiller（537046011002）

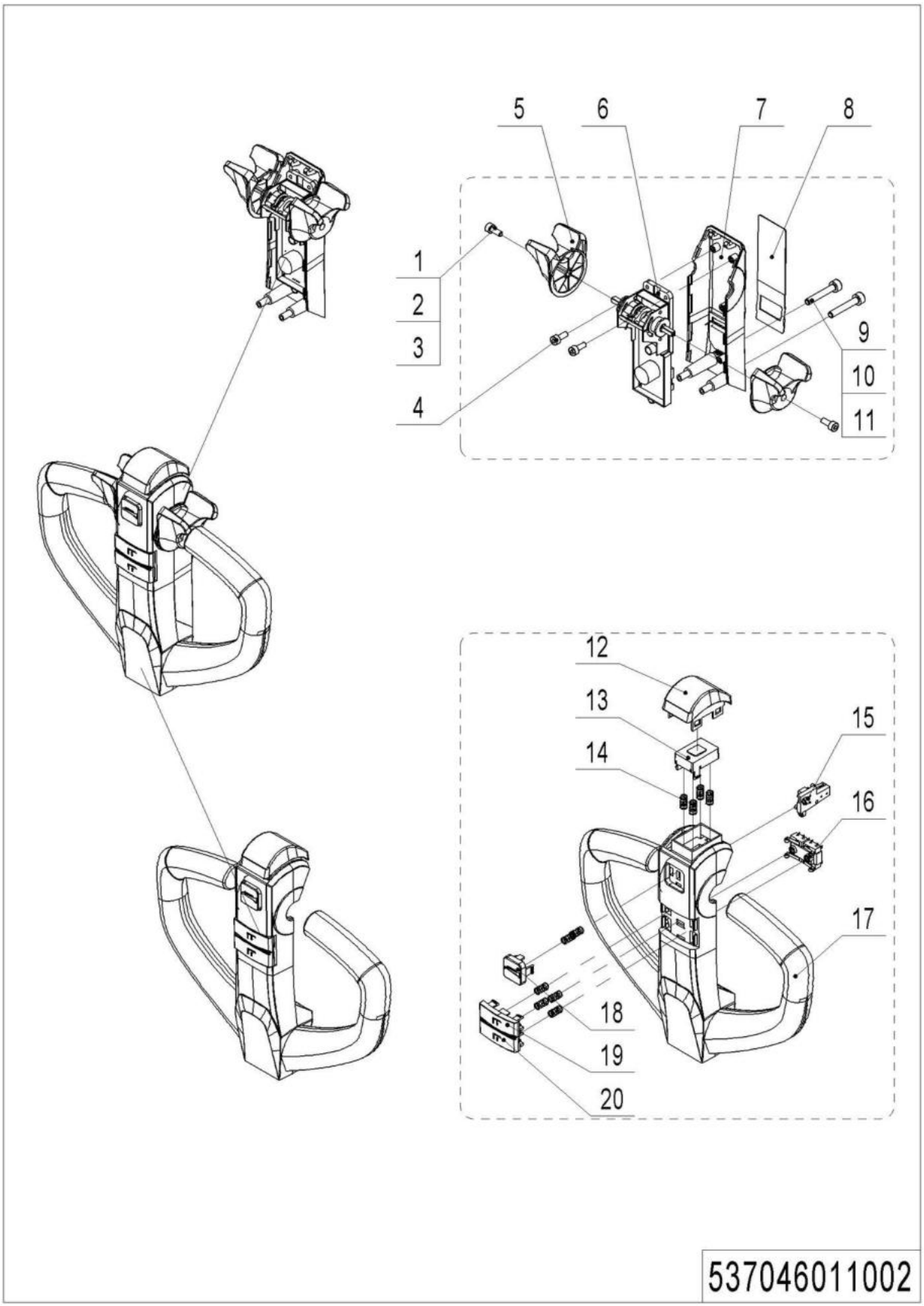

02 Tiller（537046011002）

No.	Item Code	Mark	Item Description	Qty.	Substitute	Note
--	922100100037	2	Tiller	1		
1	910200200004	1	Screw	2		
2	910400500002	1	Spring Washer	2		
3	910400100002	1	Flat Washer	2		
4	910200500022	1	Screw	4		
5	537098520008	2	Acceleration Switch	2		
6	537098510002	2	Accelerator	1		
7	536898520011	2	Cover	1		
8	536898520012	2	Button	1		
9	910200200159	1	Screw	2		
10	910400500004	1	Spring Washer	2		
11	910400100004	1	Flat Washer	2		
12	537098520007	2	Switch	1		
13	537098520006	2	Cover	1		
14	537098520005	1	Spring	10		
15	537098510001	2	Wire Harness	1		
16	537098510003	2	Wire Harness	1		
17	537098520001	2	Plastic Handle	1		
18	537098520004	2	Horn Button	1		
19	537098520003	2	Switch	1		
20	537098520002	2	Switch	1		

03 Load Roller(Tandem Rollers)（532646017001）

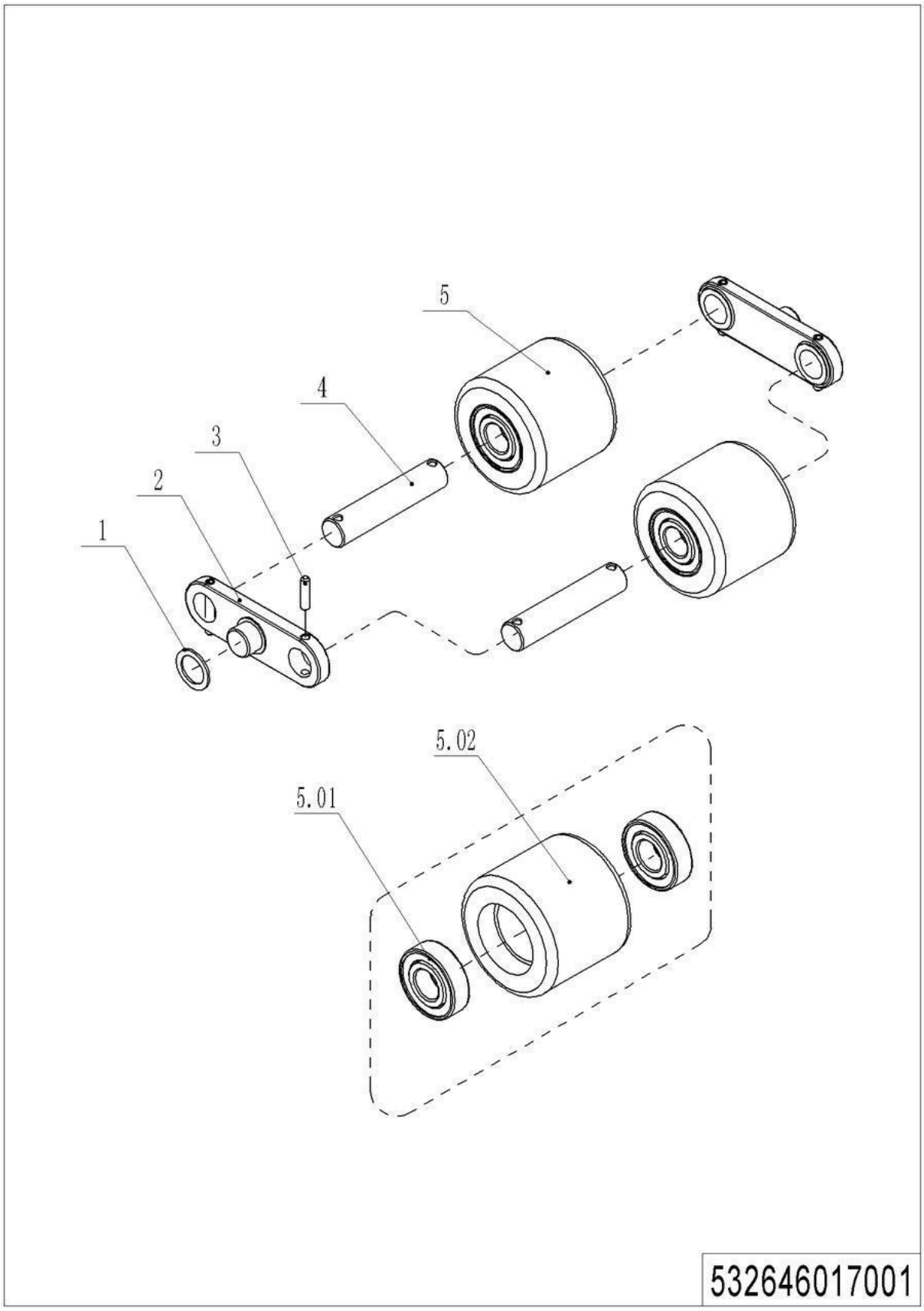

03 Load Roller(Tandem Rollers)（532646017001）

No.	Item Code	Mark	Item Description	Qty.	Substitute	Note
1	940600500012	2	Washer	4		
2	532617020002	2	Plate	4		
3	910600400027	1	Spring Pin	8		
4	502317020001	2	Axle	4		
5	502398510002		Wheel	4		
5.01	910700200019		Bearing	8		
5.02	940300300005		WheelΦ80x70	4		

04 Load Roller(Single Roller)（537046017001）

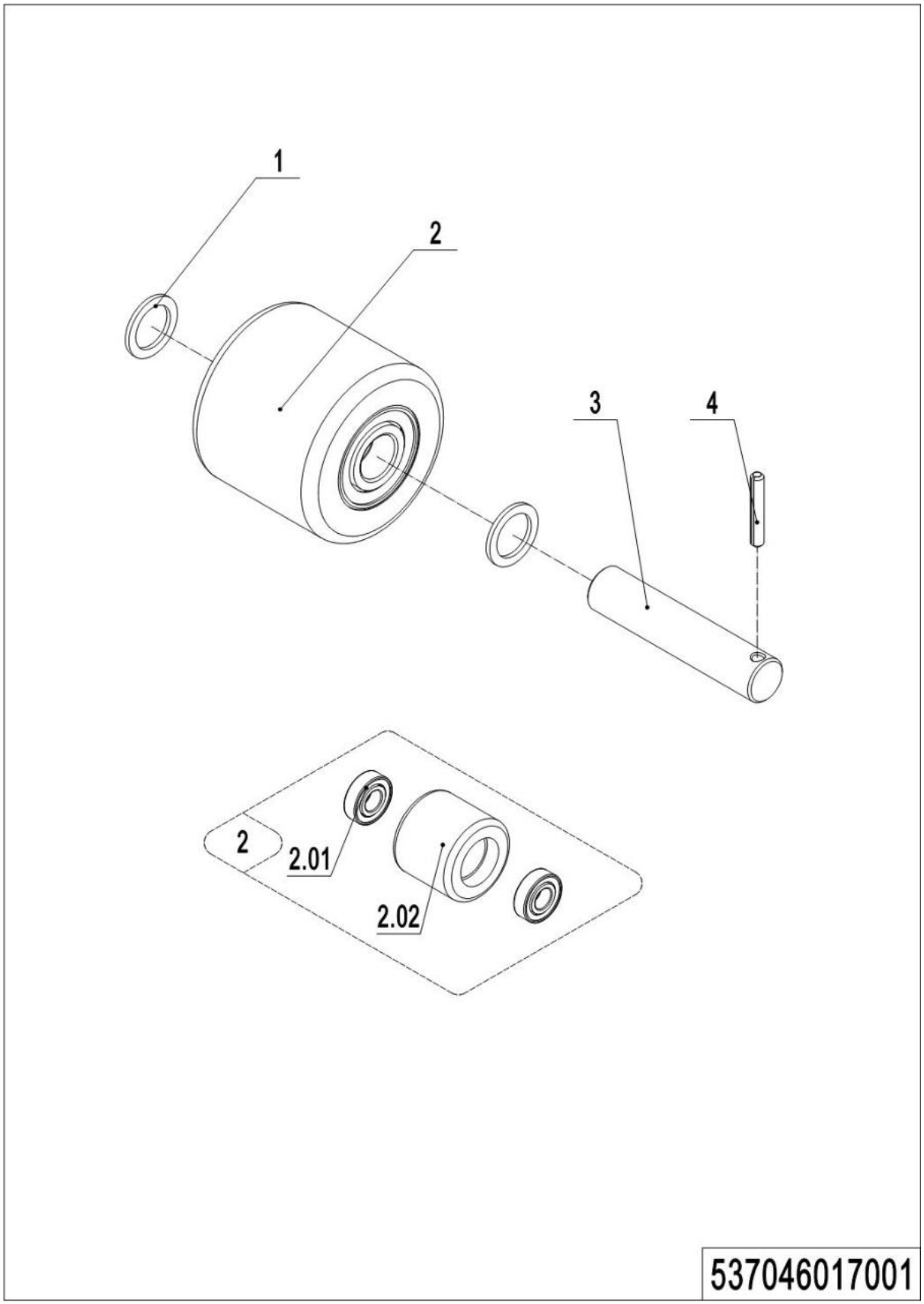

04 Load Roller(Single Roller)（537046017001）

No.	Item Code	Mark	Item Description	Qty.	Substitute	Note
1	940600500053		Washer	2		
2	502398510014		Wheel	1		
2.01	910700200019		Bearing	2		
2.02	940300300023		Wheel Φ80x93	1		
3	532217020001		Axle	1		
4	910600400030		Spring Pin	1		

05 Caster（532246016501）

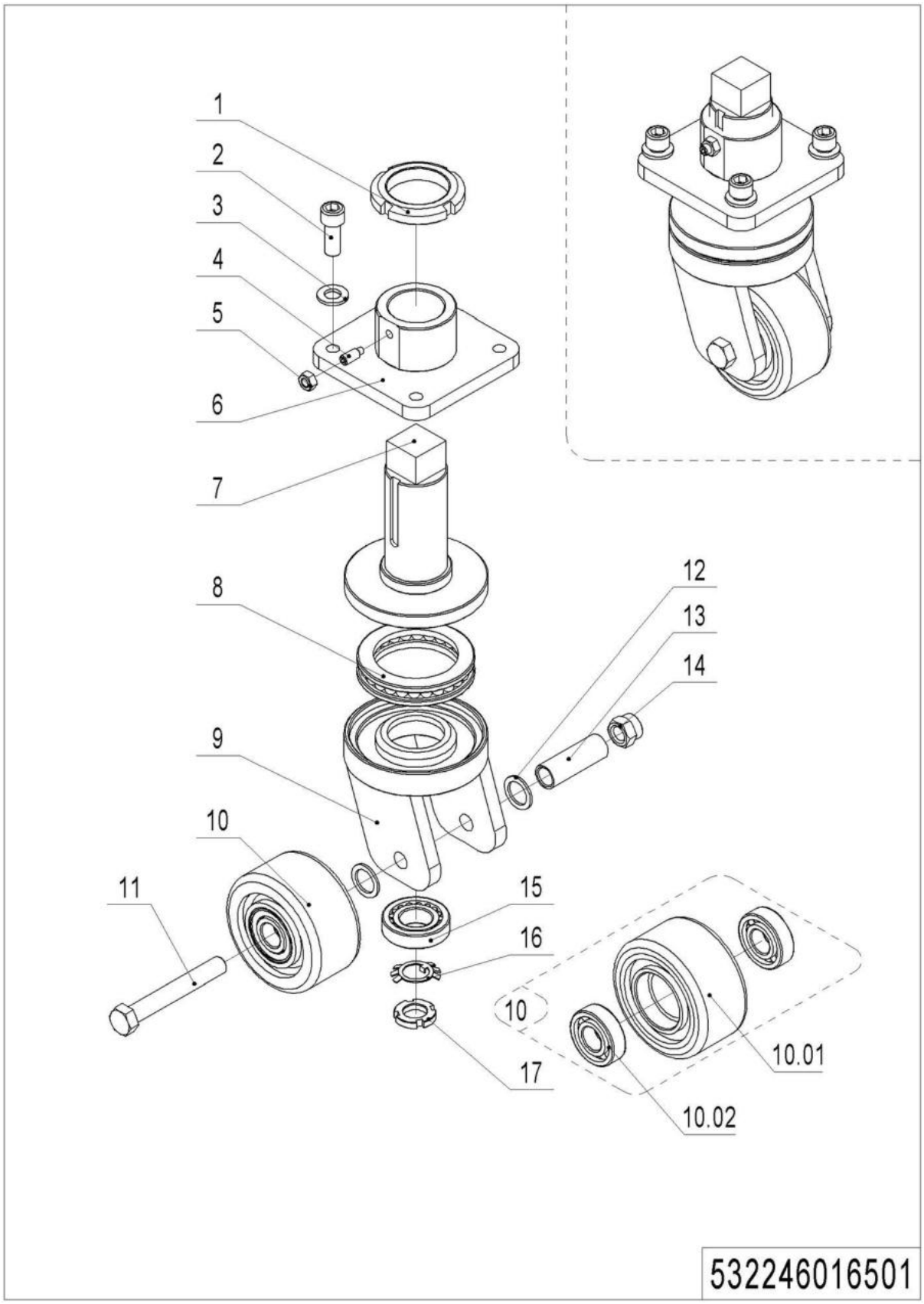

05 Caster（532246016501）

No.	Item Code	Mark	Item Description	Qty.	Substitute	Note
--	532298510041		Caster Assembly	1		
1	941100900004	1	Nut	1		
2	910200200098	1	Screw	4		
3	910400100008	1	Flat Washer	4		
4	910201000012	1	Screw	1		
5	910300100006	1	Nut	1		
6	532216510003	2	Fixing Base	1		
7	532216510002	2	Axle	1		
8	910700700011		Bearing	1		
9	532216510001	2	Wheel Carrier	1		
10	532298510004		Caster Assembly	1		
10.01	940300300030		WheelΦ100x50	1		
10.02	910700200019		Bearing	2		
11	910100100069	1	Bolt	1		
12	940600500005	1	Washer	4		
13	532216520006		Sleeve	1		
14	910300500007	1	Nut	1		
15	910700600001		Bearing	1		
16	910400900002	1	Lock Washer	1		
17	910300700008	1	Nut	1		

Chapter 5: Electrical Parts

01 Display Assembly（537046010001）

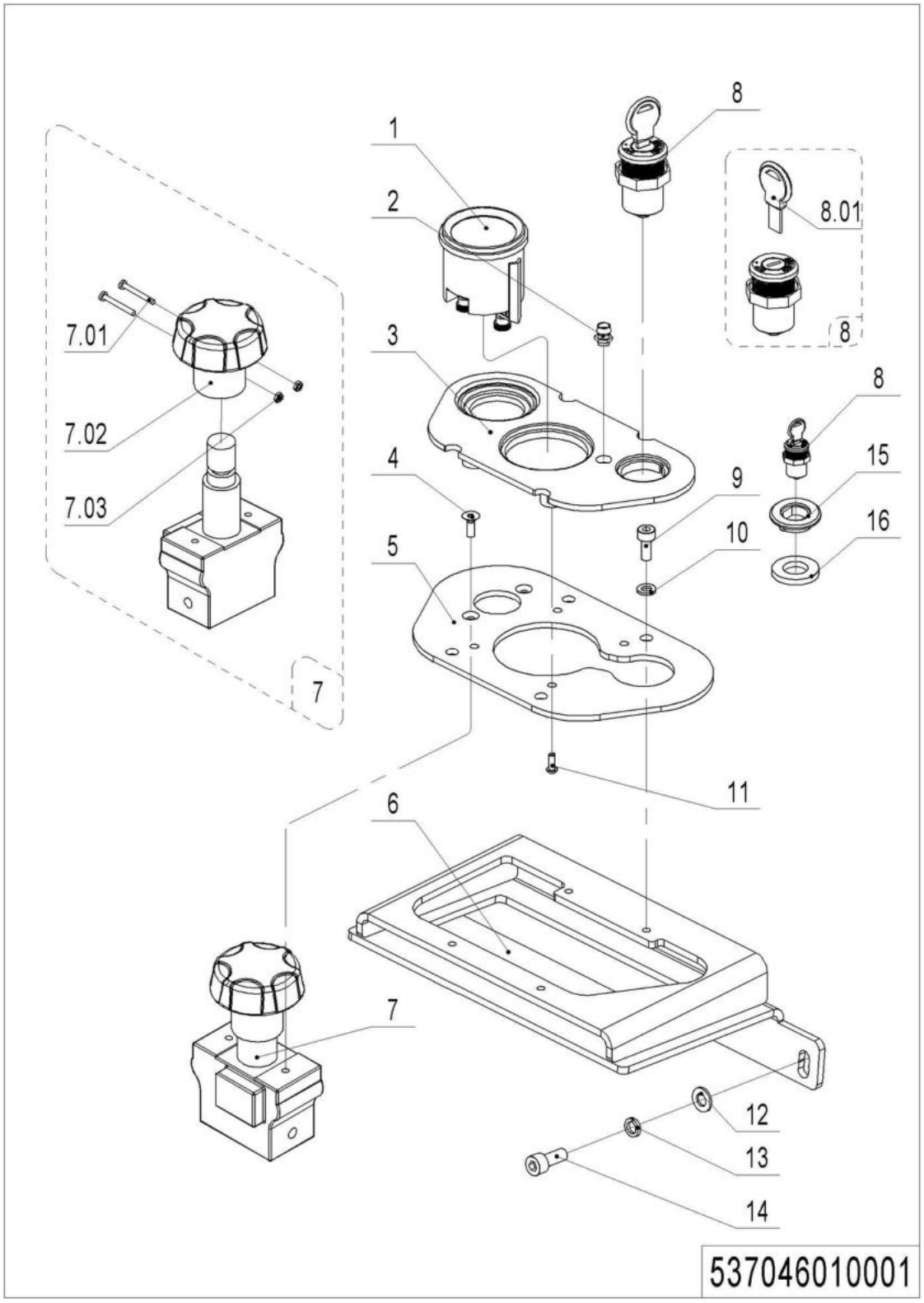

01 Display Assembly（537046010001）

No.	Item Code	Mark	Item Description	Qty.	Substitute	Note
1	921100100018		Battery Indicator	1		
1	921100100081		Coulombmeter	1		Only For Lithium Battery
2	922000100024	1	Lamp Holder	1		
3	536810020002	2	Panel	1		
4	910200400011	1	Screw	2		
5	534710020005	2	Fixing Base	1		
6	536810010000	2	Mounting Plate	1		
7	920200100001		Emergency Button	1		
7.01	910200500016	1	Screw	2		
7.02	505698520029		Button	1		
7.03	910300100002	1	Nut	2		
8	920200200001		Key Switch	1		
8	920200200021		Key Switch	1		Only For Lithium Battery
8.01	505698520031		Key	1		
8.01	920200200024		Key	1		Only For Lithium Battery
9	910200200033	1	Screw	4		
10	910400100005	1	Flat Washer	4		
11	910201300001	1	Screw	4		
12	910400100006	1	Flat Washer	4		
13	910400500006	1	Spring Washer	4		
14	910200200057	1	Screw	4		
15	531810020002		Mounting Base	1		Only For Lithium Battery
16	910400100012	1	Flat Washer	1		Only For Lithium Battery

02 Traction Battery（537046037001）

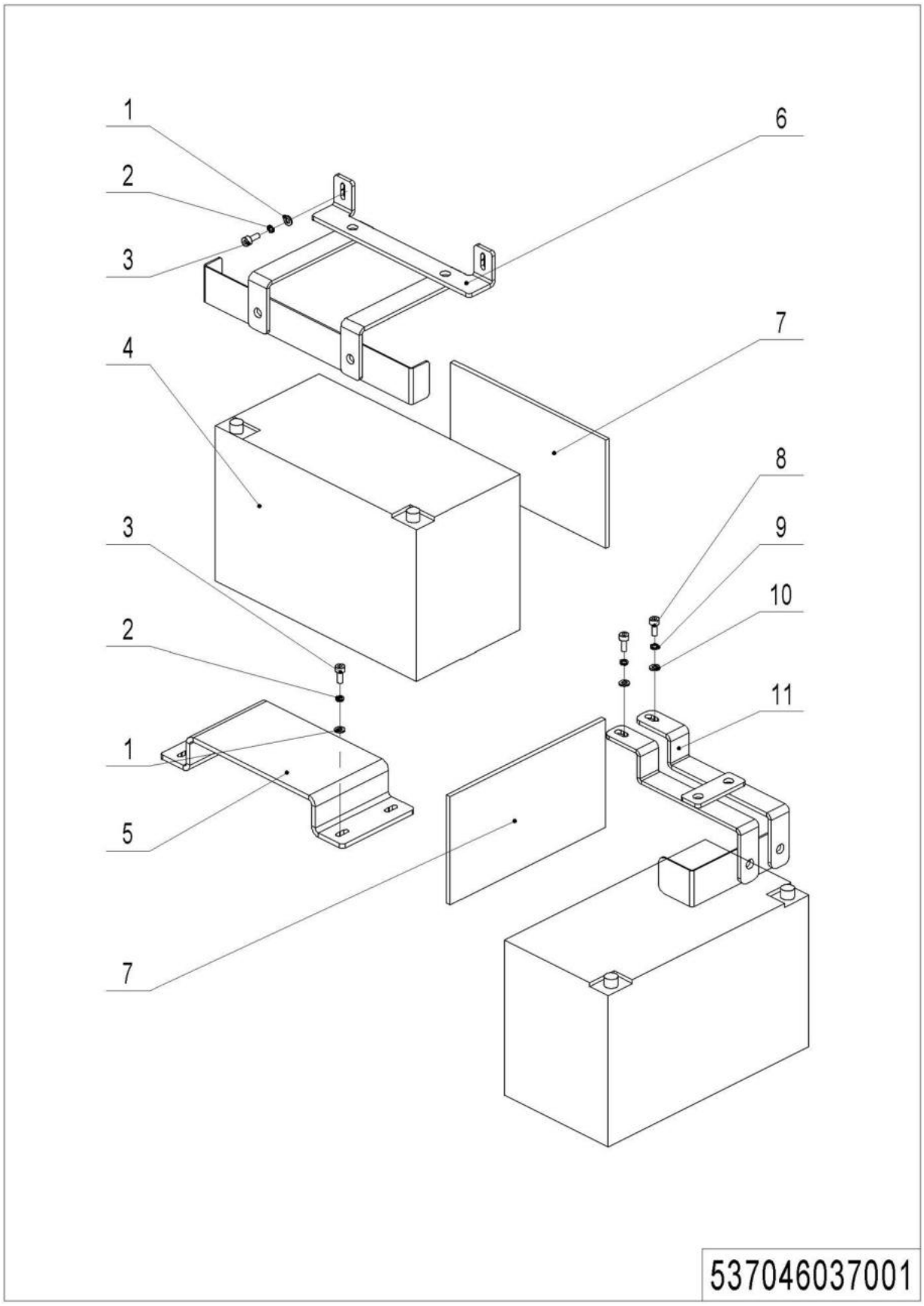

1= Supply as package. 2= Supply with constraints. 3= Phasing-out supply. 4= Supply as assembly. 5= Check other tables.

02 Traction Battery（537046037001）

No.	Item Code	Mark	Item Description	Qty.	Substitute	Note
1	910400100005	1	Flat Washer	6		
2	910400500005	1	Spring Washer	6		
3	910200200033	1	Screw	6		
4	920600100152		Battery12V106Ah	2		
5	537037020001	2	Bracket	1		
6	537037010000	2	Mounting Plate	1		
7	531837020011		Crash Pad	2		
8	910200200057	1	Screw	2		
9	910400500006	1	Spring Washer	2		
10	910400100006	1	Flat Washer	2		
11	537237010001	2	Mounting Plate	1		

03 Wire Harness（537046033001）

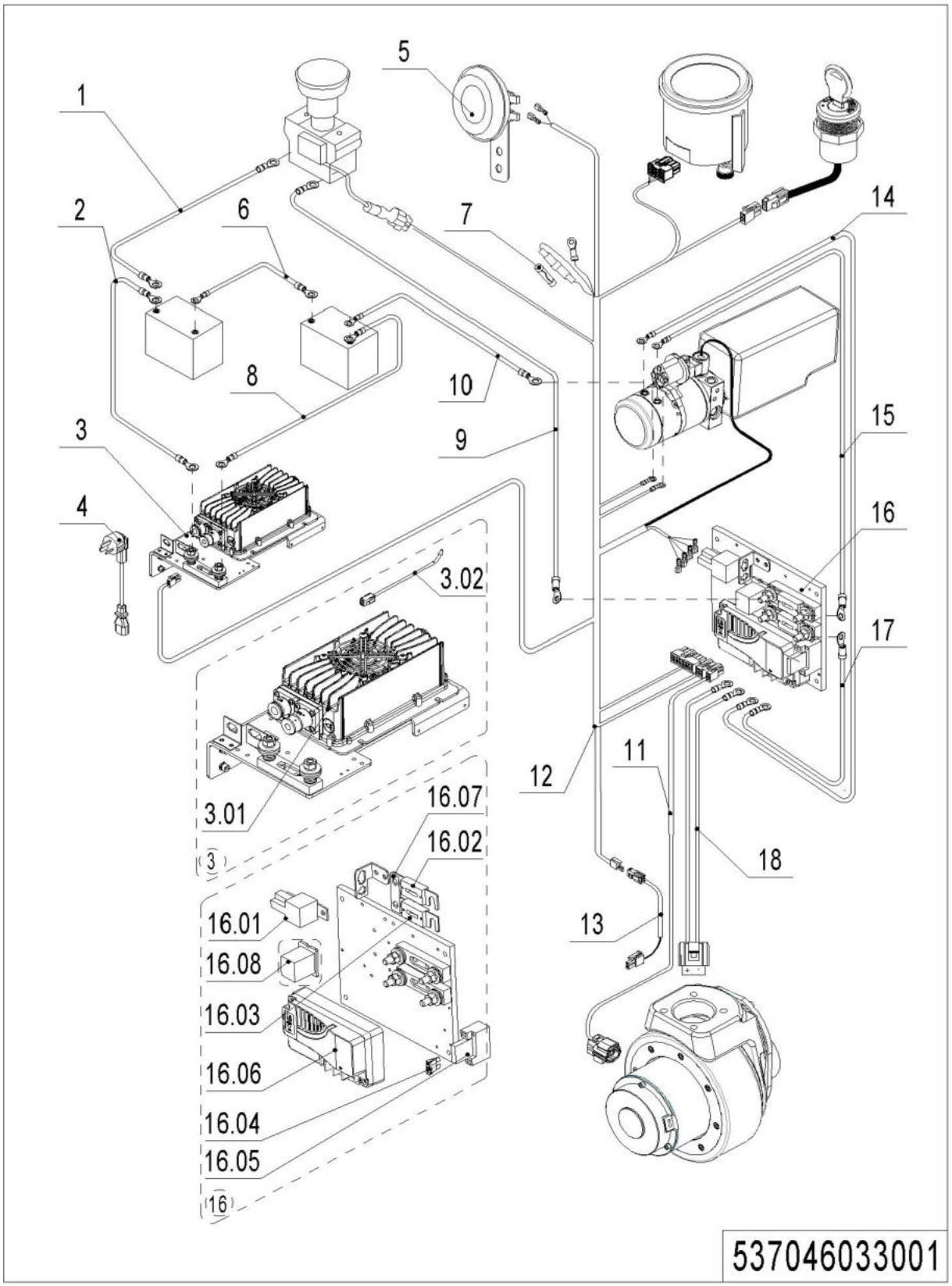

03 Wire Harness（537046033001）

No.	Item Code	Mark	Item Description	Qty.	Substitute	Note
1	537033010005	2	Cable	1		
2	537233010012	2	Cables	1		
3	537036510000	2	charger24V15A(Asia)	1		
3	537036510001	2	charger24V15A(ENG)	1		
3	537036510002	2	charger24V15A(US)	1		
3	537036510003	2	charger24V15A(EU)	1		
3	537036510004	2	charger24V15A(AUS)	1		
3	537036510005	2	charger24V15A(ITA)	1		
3	537036510006	2	charger24V15A(SWE)	1		
3.01	921000100056	2	Charger24V15A	1		
3.01	921000100065	2	Charger 12V10A (ISR)	1		
3.02	922000100025	2	Lamp	1		
4	921500200008	2	Spring Cable（Asia）	1		
4	921500200004	2	Spring Cable(ENG)	1		
4	921500200002	2	Spring Cable(USA)	1		
4	921500200005	2	Spring Cable(EU)	1		
4	921500200003	2	Spring Cable(AUS)	1		
4	921500200006	2	Spring Cable(ITY)	1		
4	921500200007	2	Spring Cable(SWD)	1		
5	920500100001	2	Horn	1		
6	537233010011	2	Cable	1		
7	920100300001		Fuse	1		
8	537233010013	2	Cables	1		
8	537033010015	2	Cables	1		
9	537033010004	2	Cable	1		
10	537233010006	2	Cable	1		
11	537033010007	2	Wire Harness	1		
12	537033010001	2	Wire Harness	1		
13	537033010010	2	Wire Harness	1		

03 Wire Harness（537046033001）Continuation

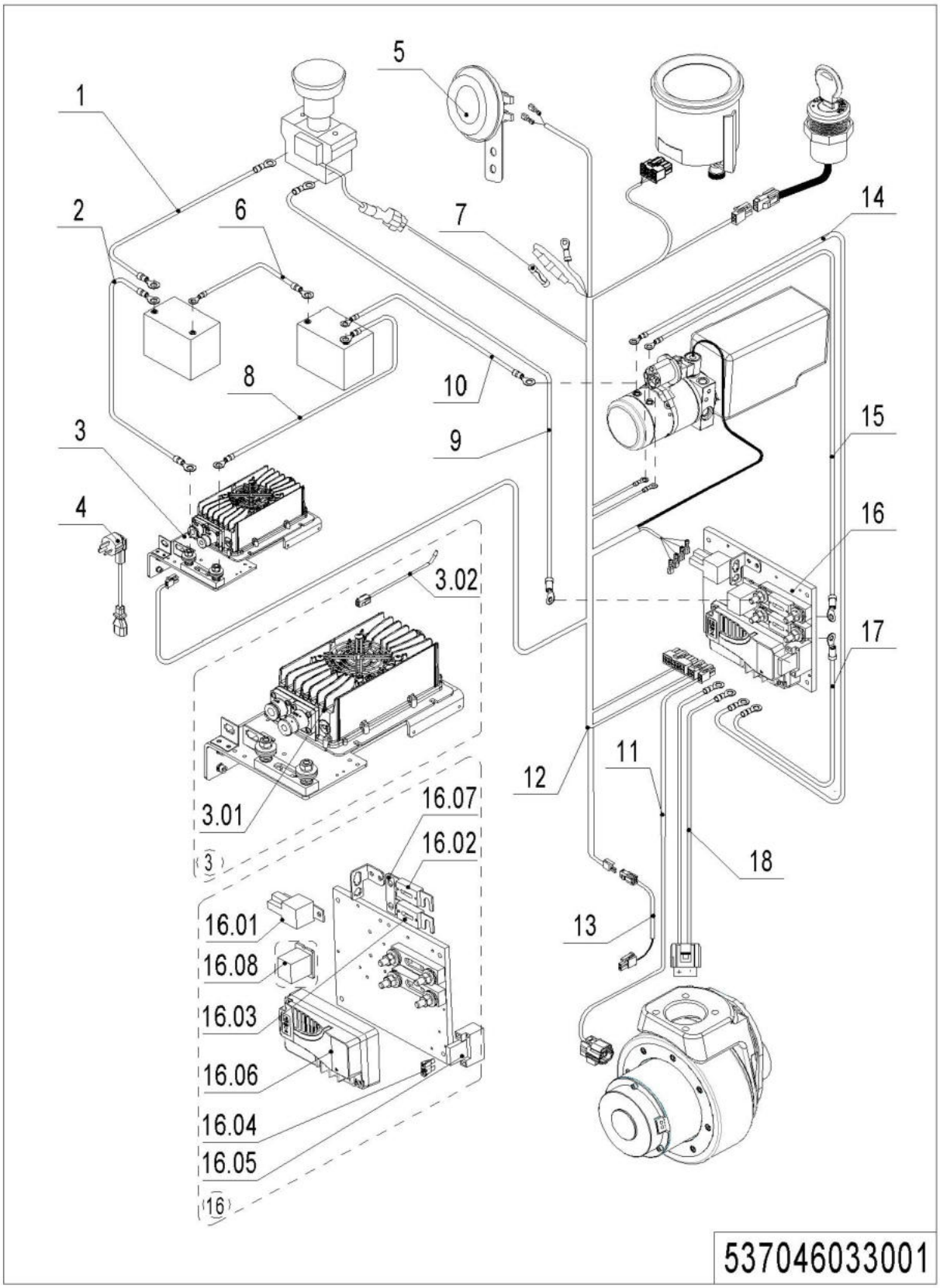

03 Wire Harness（537046033001）Continuation

No.	Item Code	Mark	Item Description	Qty.	Substitute	Note
14	537233010008	2	Cables	1		
15	537233010004	2	Cable	1		
16	537033010000	2	Electronic Components	1		
16.01	920800100011	2	Relay	1		
16.02	920100100008	2	Fuse	1		
16.03	920100100004	2	Fuse	1		
16.04	920100200002	2	Fuse	1		
16.05	920100400006	2	Fuse Holder	1		
16.06	921400100097	2	Controller	1		
16.07	505633020003	2	Copper Busbar	1		
16.08	532033010023	2	Module	1		
17	537233010003	2	Cables	1		
18	537033010006	2	Wire Harness	1		

Chapter 6: Special Parts

01 Load Backrest(Optional)（532646040501）

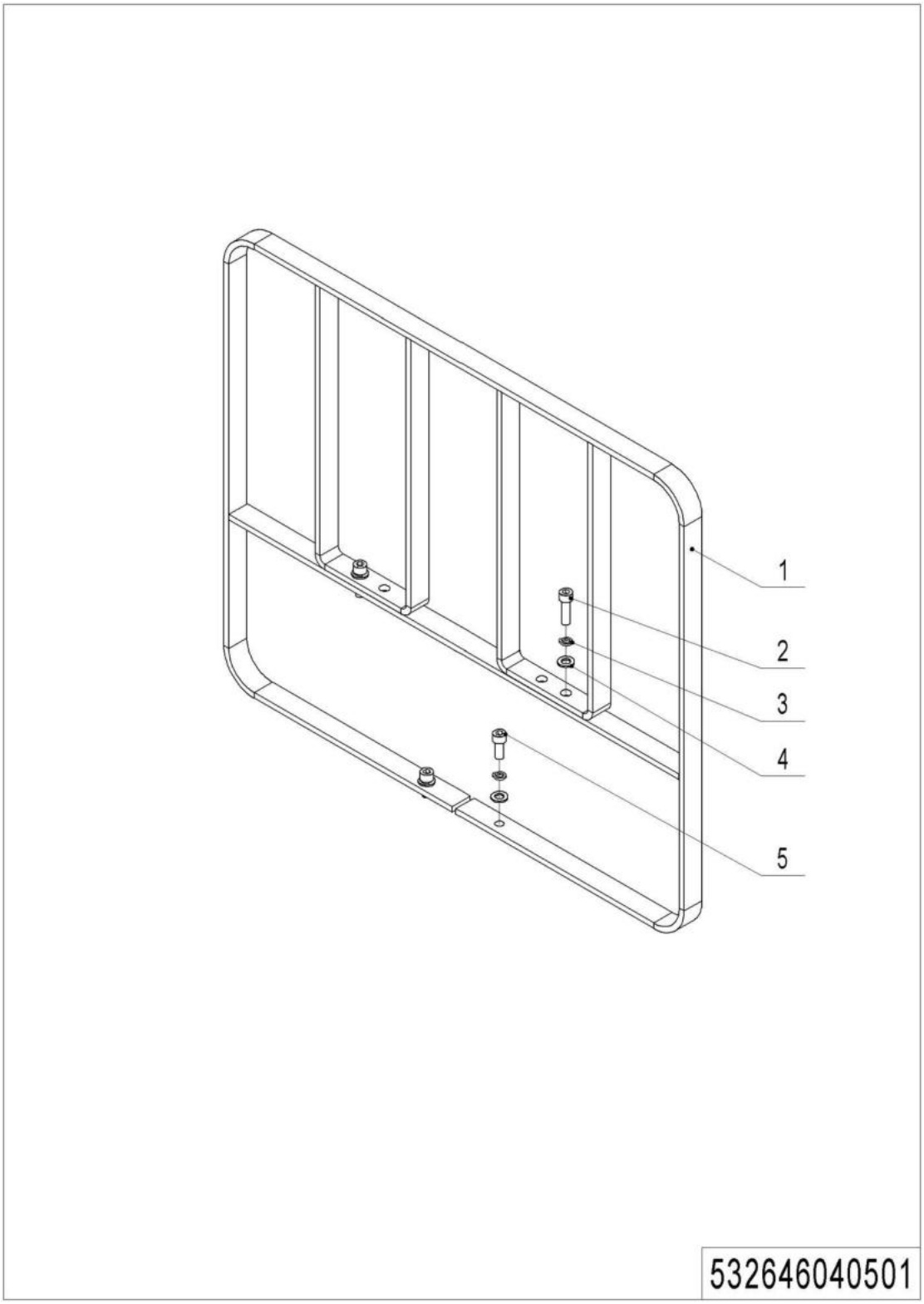

01 Load Backrest(Optional)（532646040501）

No.	Item Code	Mark	Item Description	Qty.	Substitute	Note
1	532640510001	2	Load Backrest	1		
2	910200200077	1	Screw	2		
3	910400500007	1	Spring Washer	4		
4	910400100007	1	Flat Washer	4		
5	910200200076	1	Screw	2		

Chapter 7: Others

01 Label and Decal(EU)（537046047003）

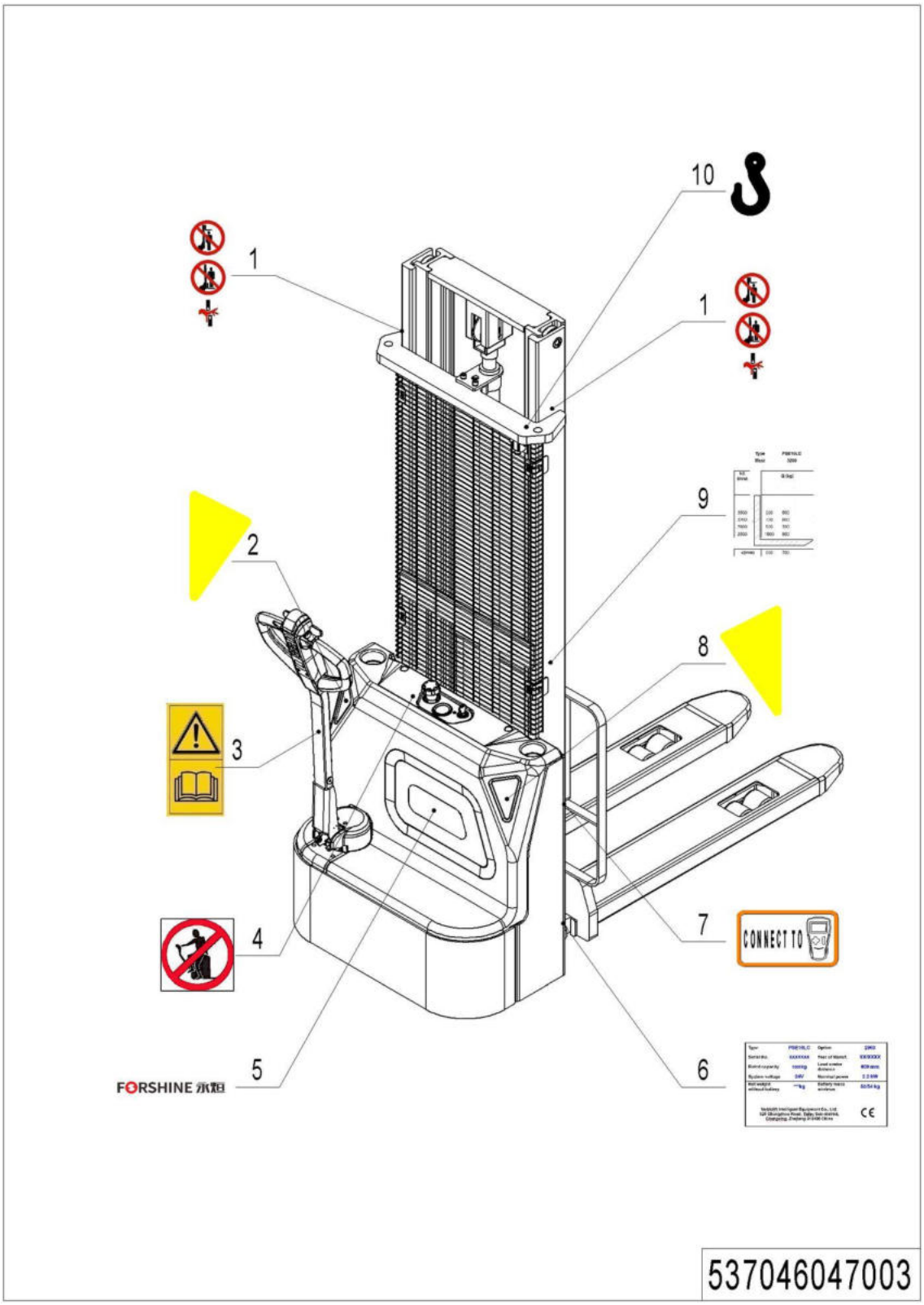

01 Label and Decal(EU)（537046047003）

No.	Item Code	Mark	Item Description	Qty.	Substitute	Note
1	941200100004		Label	2		
2	536847020001		Label	1		
3	941200300002		Label	1		
4	941200100003		Label	1		
5	941200500007		Label	1		Depends On Customer
6	537047502001		Truck data plate	1		
7	941200300019		Label	1		
8	536847020000		Label	1		
9	537047502002		Load Capacity Diagram	1		
10	941200300001		Label	2		

02 Label and Decal(USA)（537046047004）

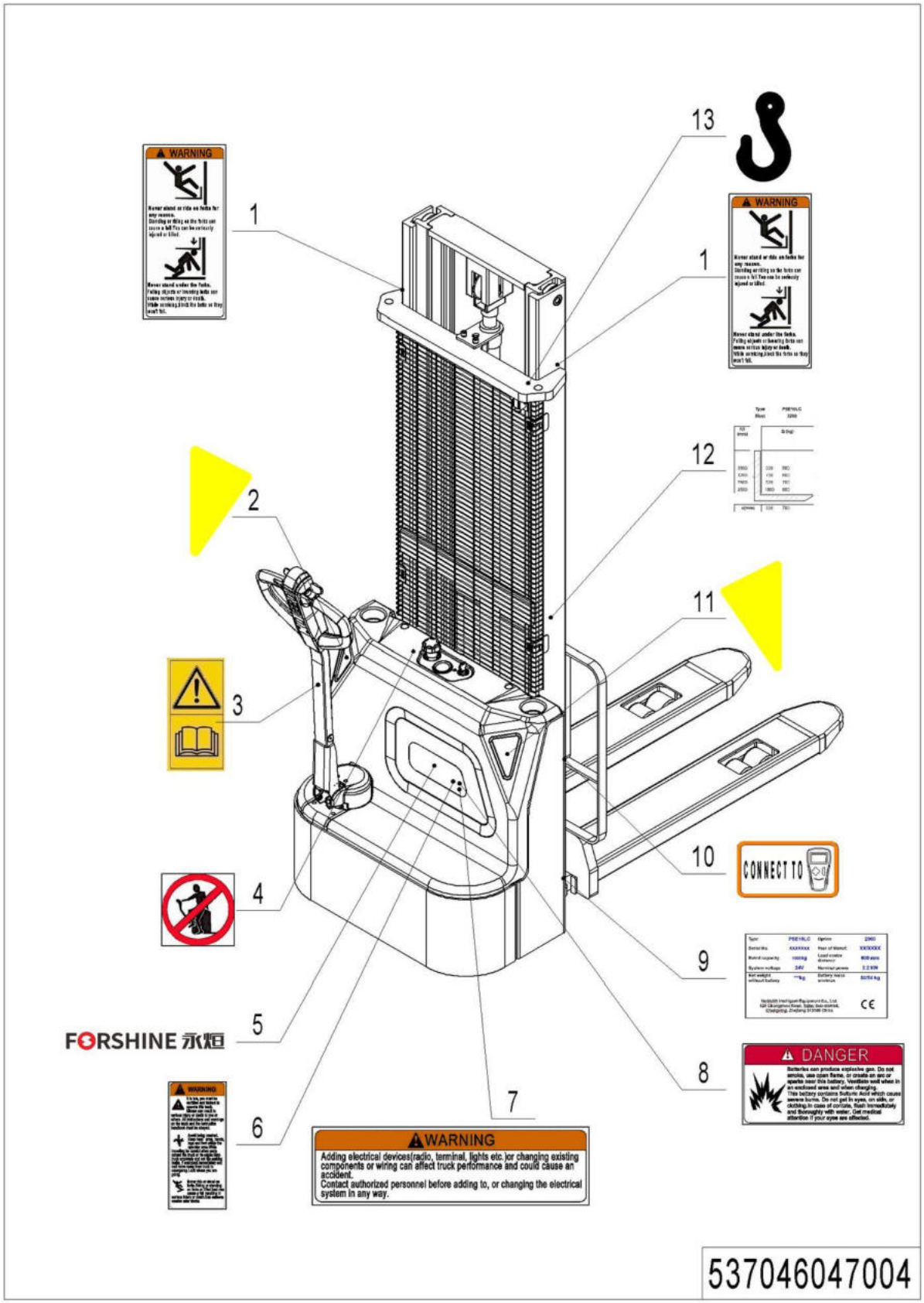

02 Label and Decal(USA)（537046047004）

No.	Item Code	Mark	Item Description	Qty.	Substitute	Note
1	941200100016		Label	1		
2	536847020001		Label	1		
3	941200300002		Label	1		
4	941200100003		Label	1		
5	941200500007		Label	1		Depends On Customer
6	941200100009		Label	1		
7	941200100010		Label	1		
8	941200100013		Label	1		
9	537047502001		Truck data plate	1		
10	941200300019		Label	1		
11	536847020000		Label	1		
12	537047502002		Load Capacity Diagram	1		
13	941200300001		Label	2		

Appendix

01 Electrical Circuit Diagram（537046045501）

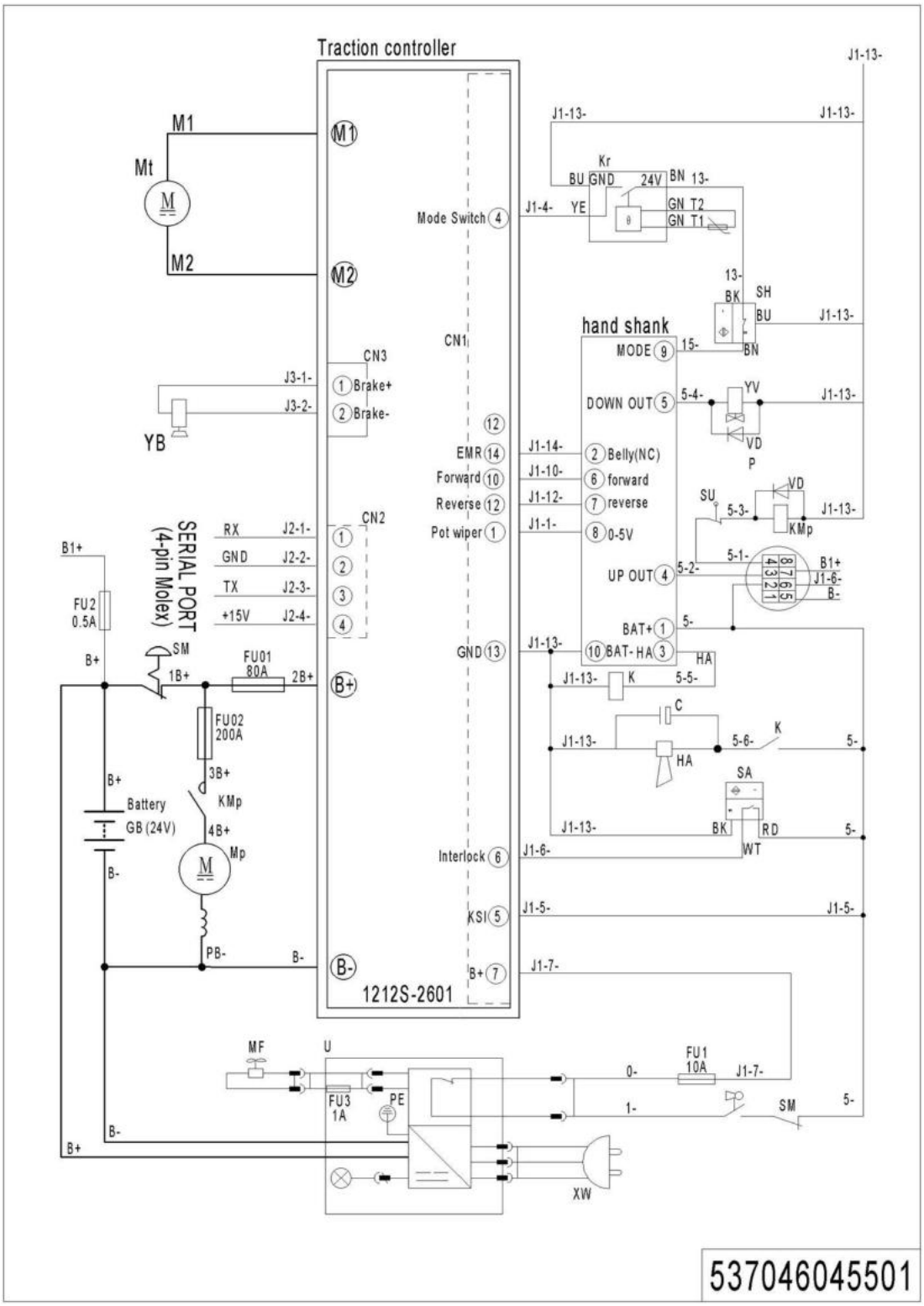

02 Hydraulic Circuit Diagram（537046045504）

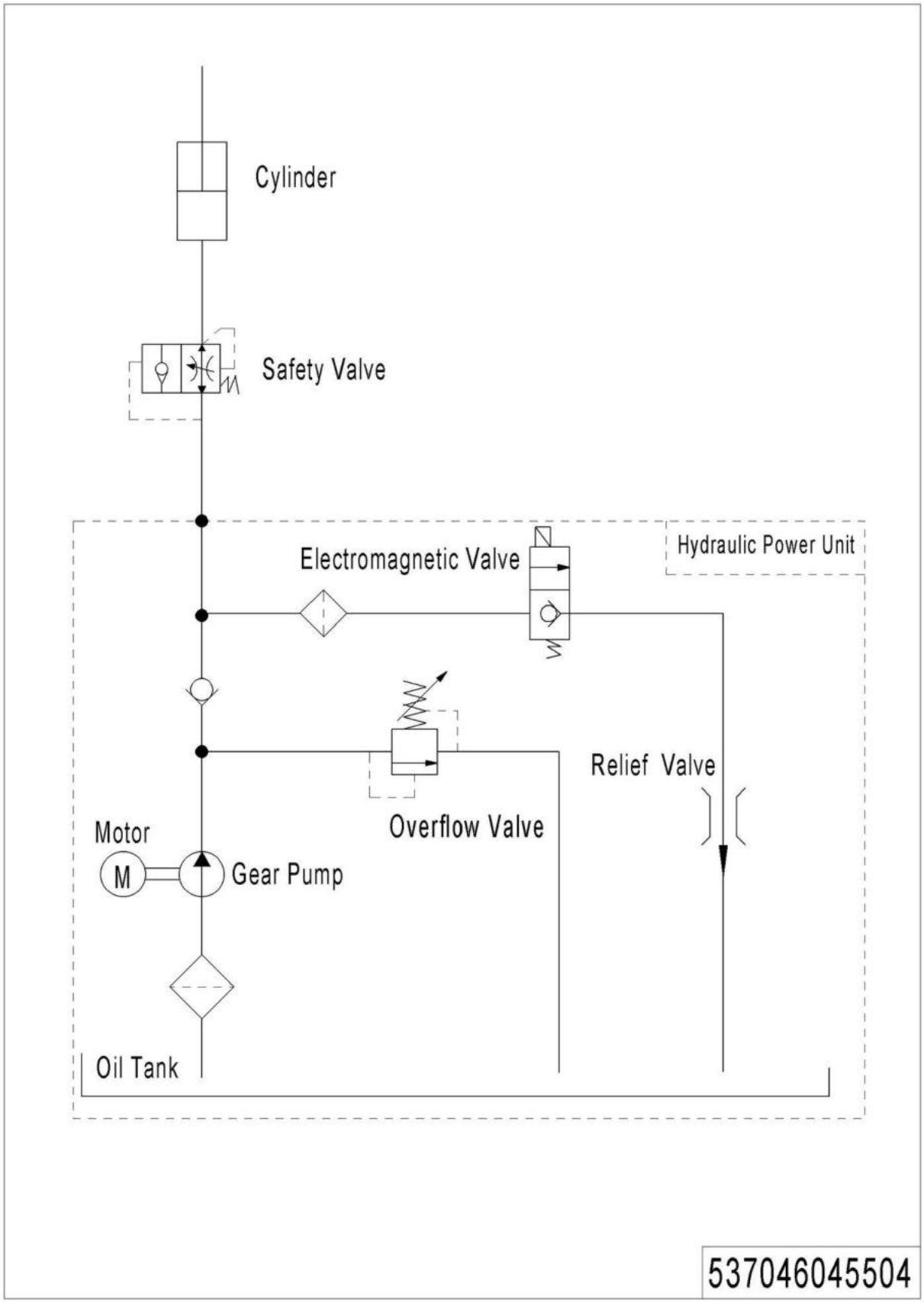

03 Consumable Parts List

No.	Item Code	Item Description	Qty.	Chapter/ Section/ Number
1	537098510015	Carbon Brush	1	Chapter 1/02/1.01
2	910700200053	Bearing	1	Chapter 1/02/3
3	961000700008	Tyre	1	Chapter 1/02/4
4	532298510026	Carbon Brush	1	Chapter 2/02/1.01
5	532698510001	Seal Kit	2	Chapter 3/02/27.01 Chapter 3/03/24.01
6	910700200021	Bearing	2	Chapter 3/04/2
7	532211020003	Gas Spring	1	Chapter 4/01/9.03
8	910700200019	Bearing	14	Chapter 4/03/5.01 Chapter 4/05/10.02
8	910700200019	Bearing		Chapter 4/04/2.01
9	940300300005	WheelΦ80x70	4	Chapter 4/03/5.02
10	940300300023	WheelΦ80x93	2	Chapter 4/04/2.02
11	910700700011	Bearing	1	Chapter 4/05/8
12	940300300030	WheelΦ100x50	1	Chapter 4/05/10.01
13	910700600001	Bearing	1	Chapter 4/05/15
14	920100100008	Fuse	1	Chapter 5/03/16.02
15	920100100004	Fuse	1	Chapter 5/03/16.03
16	920100200002	Fuse	1	Chapter 5/03/16.04