Print Number: Print Date:

NOBLELIFT
Material Handling

Scan QR Code for More

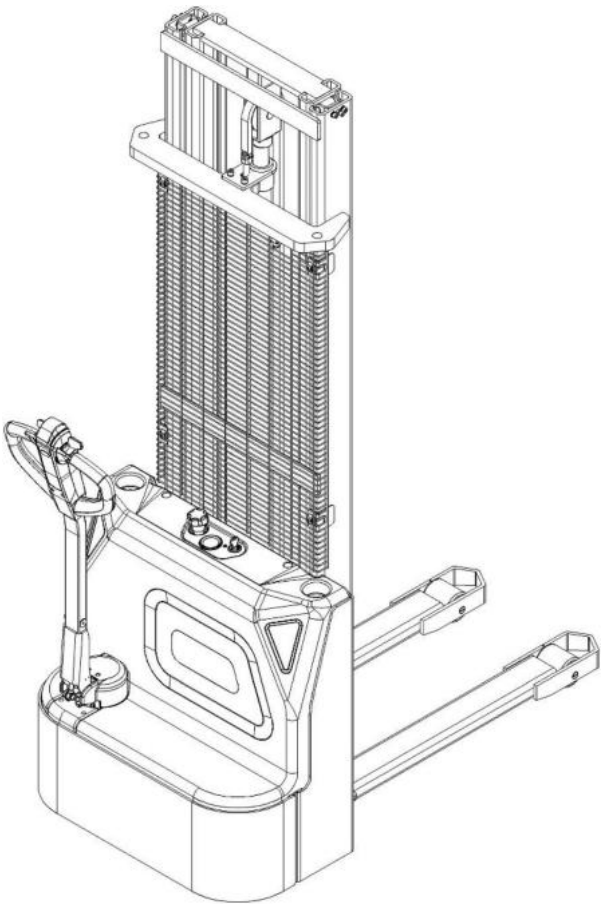

Electric Pallet Stacker PSE10L-C

PARTS MANUAL

536846020101

Version：V01

Truck Identification Number From:

Parts Manual PSE10L-C-PM01EN

Please order parts from authorized dealers of Noblelift Intelligent Equipment Co., LTD.

In order to avoid wrong delivery, all the orders for spare parts should specify the following items:

- Truck model, identification number and manufacture year.
- Orders for spare parts of mast, hydraulic transmission unit, steering axle, motor, etc. shall indicate the manufacture number of these parts.
- Codes for Noblelift spare parts are shown in the table of parts manual. Please also pay attention to the description of supply status, order quantity, etc. (check the number listed in "Mark" column of the parts manual).

"Mark" Column:

The unmarked indicates the parts are in short supply cycle.

Number 1: supply as package. Indicating these that parts are small parts and seal parts, which are supplied in package unit and in short supply cycle.

Number 2: supply with constraints. Indicating that these spare parts are not in stock and will be prepared for production after receiving the order from customers, which are in long supply cycle.

Number 3: phasing-out supply. Indicating that these parts will be replaced by new parts due to technical improvements and the current stock will not be available when these parts run out. Please check the description of technical improvements notice.

Number 4: supply as assembly. Indicating that these parts are assembly parts defined by manufacture process, which cannot be supplied as a single part.

Number 5: check other tables.

This parts manual is the property of Noblelift and can be shared under the confidential agreement only, Noblelift has the right to claim for compensation of any unauthorized use. Copy without permission is not allowed. Figures in the manual are not limited by the original design. Noblelift Intelligent Equipment Co., LTD reserves the right to improve the products for continuous technology progress.

Table of Contents

Chapter 1: Drive System....4
01 Drive Unit（537046013501）....4
02 Drive Assembly（537046013502）....6
Chapter 2: Hydraulic System....8
01 Hydraulic Components（536846024001）....8
02 Hydraulic Unit（532246023501）....10
Chapter 3: Truck Frame....12
01Fork Carriage (536846038001)....12
02 Chassis (Single Stage Mast)（536846021501）....14
02 Chassis (Single Stage Mast)（536846021501）Continuation....16
03 Chassis (Two Stage Mast)（536846021502）....18
03 Chassis (Two Stage Mast)（536846021502）Continuation....20
04 Inner Mast Assembly（536846044001）....22
Chapter 4: Steering System, Braking System, Wheels....24
01 Tiller Unit（536846011001）....24
02 Tiller（536846011002）....26
03 Load Roller（536846017001）....28
04 Caster（532246016501）....30
Chapter 5: Electrical Parts....32
01 Display Assembly（536846010001）....32
02 Traction Battery（536846037001）....34
03 Traction Battery (Lithium Battery)（536846037002）....36
04 Wire Harness（536846033001）....38
04 Wire Harness（536846033001）Continuation....40
Chapter 6: Special Parts....42
01 Load Backrest(Optional)（532646040501）....42
Chapter 7: Others....44
01 Label and Decal(EU)（536846047001）....44
02 Label and Decal(USA)（536846047002）....46
Appendix....48
01 Electrical Circuit Diagram（536846045501）....48
02 Electrical Circuit Diagram (Lithium Battery)（536846045502）....49
03 Hydraulic Circuit Diagram（537046045504）....50
04 Consumable Parts List....51

Chapter 1: Drive System

01 Drive Unit（537046013501）

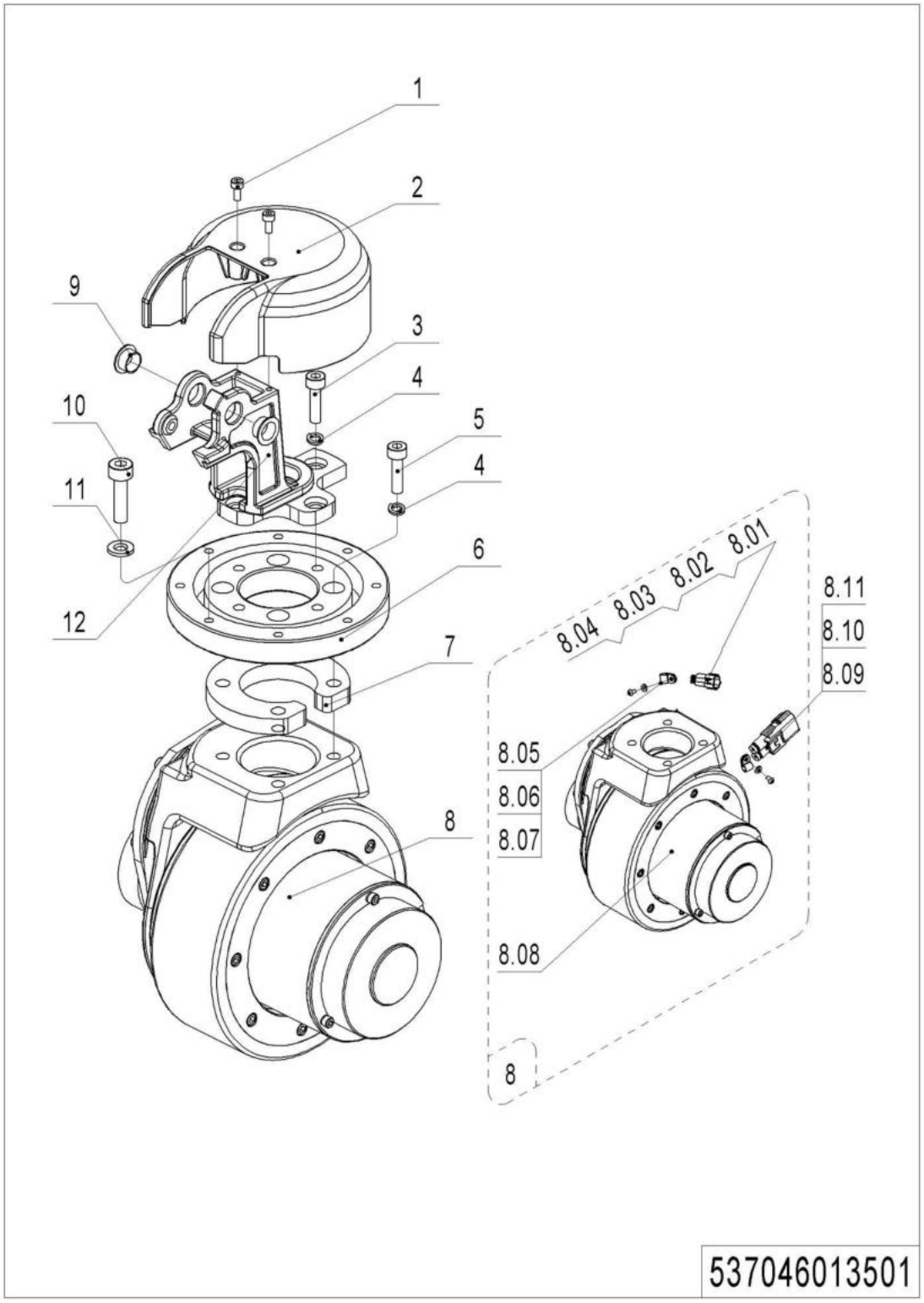

01 Drive Unit (537046013501)

No.	Item Code	Mark	Item Description	Qty.	Substitute	Note
1	910200200022	1	Screw	2		
2	536813520000	2	Protective Cover	1		
3	910200200076	1	Screw	4		
4	910400500007	1	Spring Washer	8		
5	910200200080	1	Screw	4		
6	532213520001		Slewing Bearing	1		
7	531813520005	2	Plate	1		
8	537098510000	2	Drive Kits	1		
8.01	920400200004	1	Connector	1		
8.02	920400200003	1	Connector	1		
8.03	920400200017	1	Connector	1		
8.04	920400200018	1	Connector	1		
8.05	910200700001	1	Screw	1		
8.06	910400100003	1	Flat Washer	1		
8.07	921300200001	1	Cable Clamp	1		
8.08	----------	5	Drive Assembly	1		Check 536846013001
8.09	920400200152	1	Connector	1		
8.10	920400200172	1	Connector	1		
8.11	920400200171	1	Connector	1		
9	940500200001	1	Bushing	2		
10	910200200061	1	Screw	8		
11	910400100006	1	Flat Washer	8		
12	536813510000	2	Bracket	1		

02 Drive Assembly（537046013502）

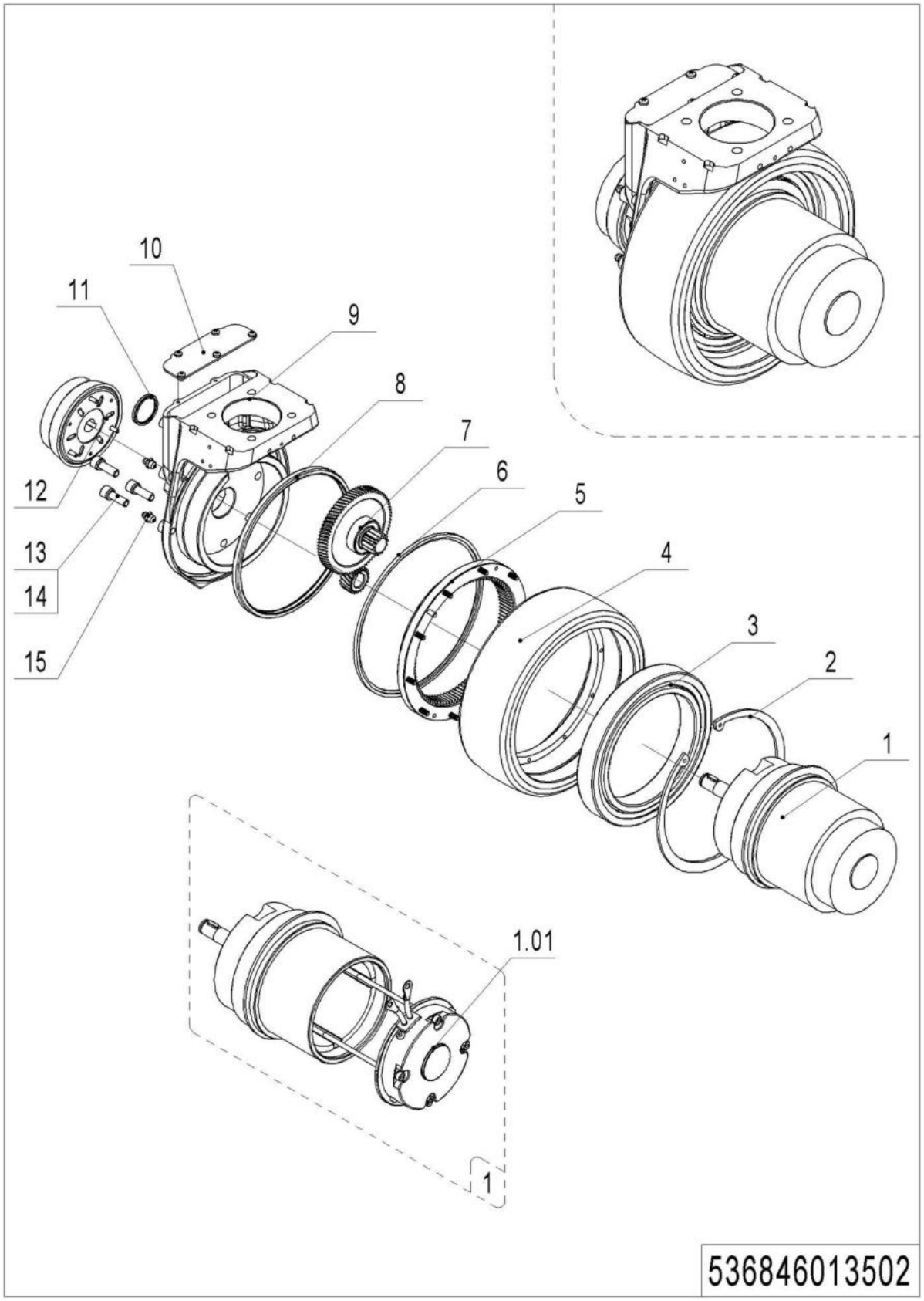

02 Drive Assembly（537046013502）

No.	Item Code	Mark	Item Description	Qty.	Substitute	Note
--	940900100028	2	Drive Unit	1		
1	537098510011	2	Motor	1		
1.01	537098510015	2	Carbon Brush	1		
2	910401400015	1	Circlip	1		
3	910700200053		Bearing	1		
4	961000700008	2	Tyre	1		
5	961000700007	2	Gear	1		
6	961000700009	1	Wiper Seal	1		
7	537098510012	2	Gear Components	1		
8	961000700013	1	Oil Seal	1		
9	537098510013	2	Gearbox	1		
10	537098510014	2	Close PlateAssembly	1		
11	961000700005	2	Cover	1		
12	961000700011	2	Brake	1		
13	910200200147	1	Screw	5		
14	910400500019	1	Spring Washer	5		
15	911200100003	1	Oil Cup	2		

Chapter 2: Hydraulic System

01 Hydraulic Components（536846024001）

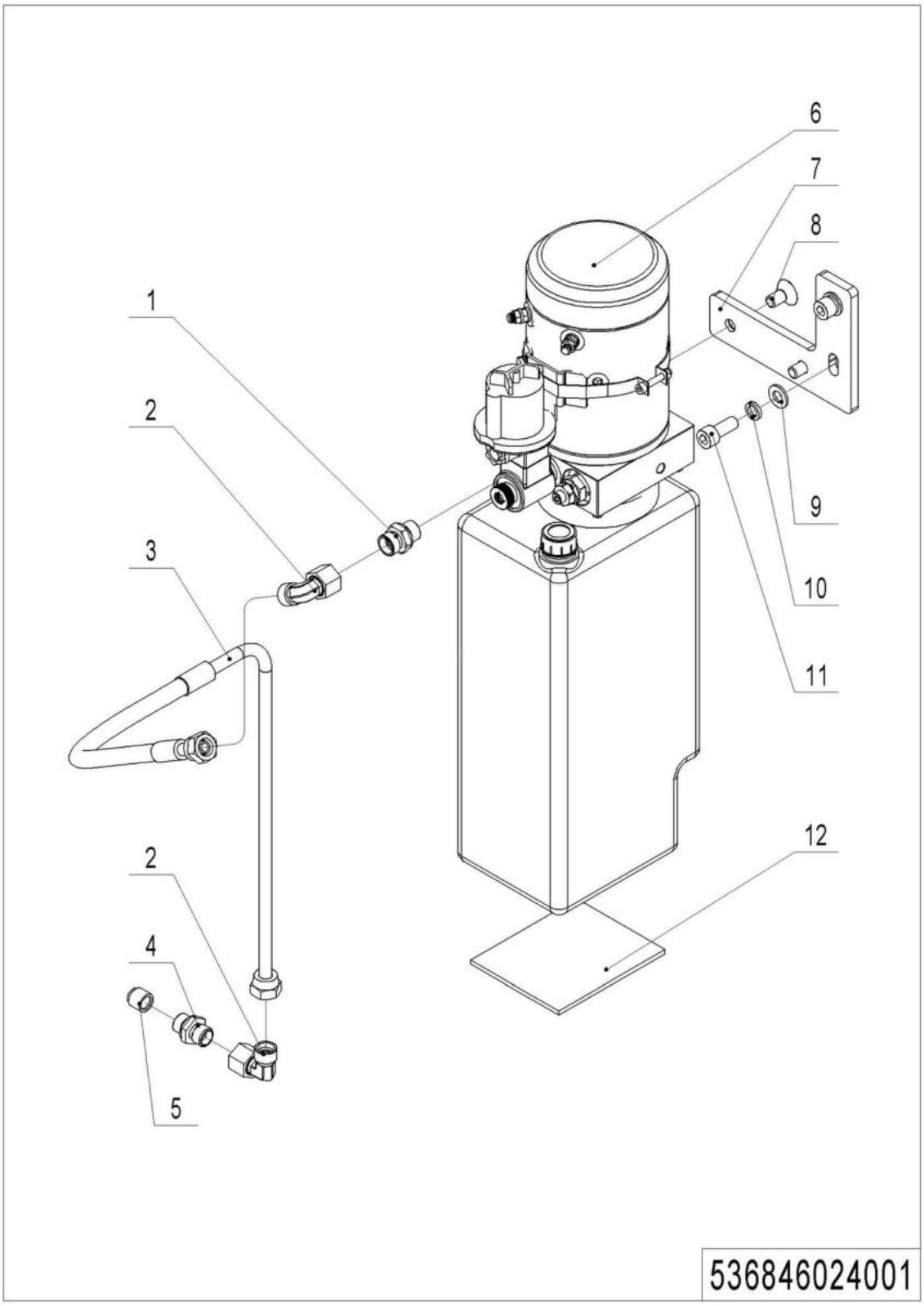

1= Supply as package. 2= Supply with constraints. 3= Phasing-out supply. 4= Supply as assembly. 5= Check other tables.

01 Hydraulic Components（536846024001）

No.	Item Code	Mark	Item Description	Qty.	Substitute	Note
1	950400300007		Joint	1		
2	950400200003		Joint	2		
3	536824010000	2	Hose	1		
4	950400400003		Joint	1		
5	950600300001		Safety Valve	1		
6			Pump Unit	1		Check 532246023501
7	536823520000	2	Mounting Plate	1		
8	910200400035	1	Screw	2		
9	910400100007	1	Flat Washer	2		
10	910400500007	1	Spring Washer	2		
11	910200200076	1	Screw	2		
12	532223520002		Crash Pad	1		

02 Hydraulic Unit（532246023501）

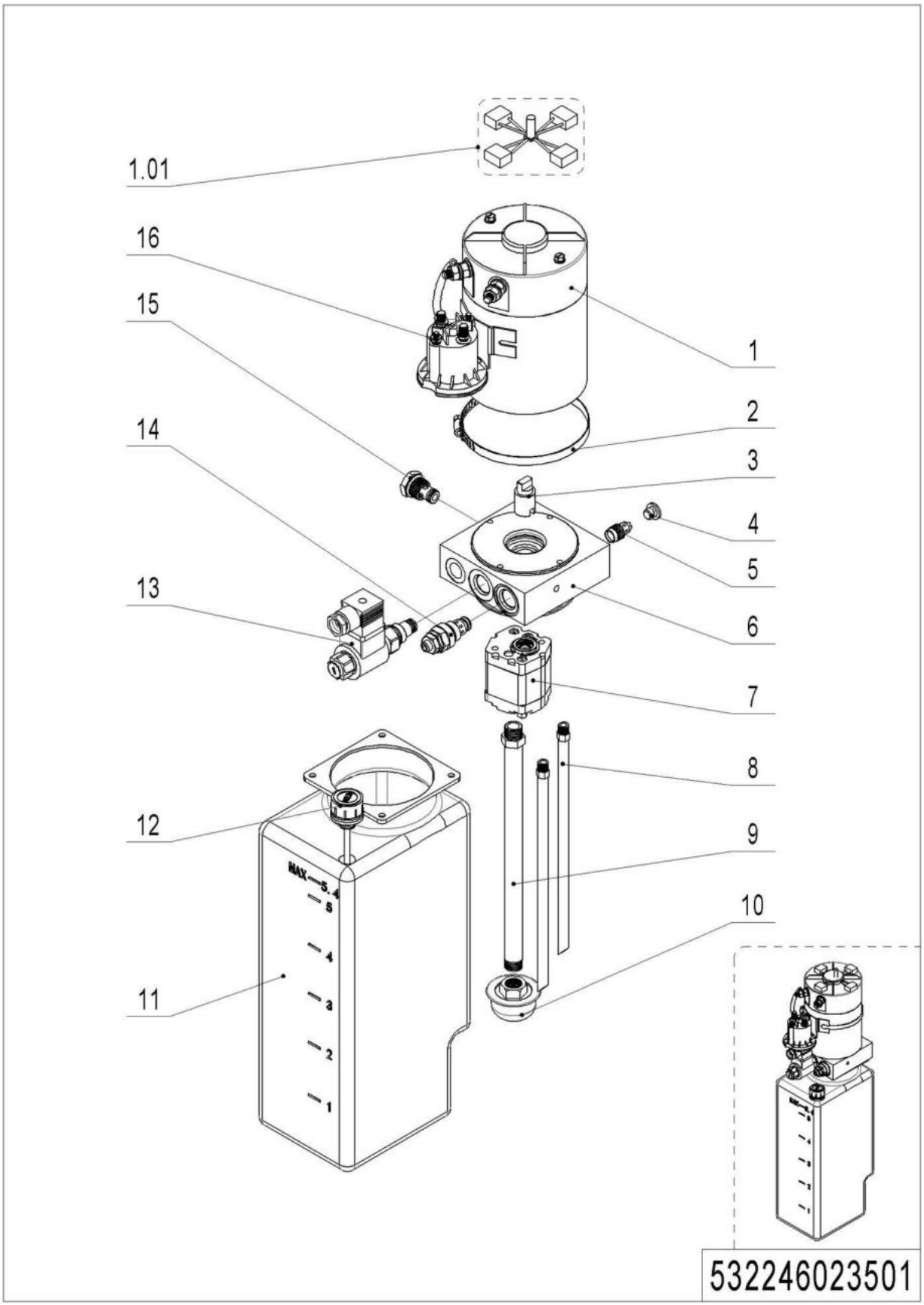

1= Supply as package. 2= Supply with constraints. 3= Phasing-out supply. 4= Supply as assembly. 5= Check other tables.

02 Hydraulic Unit（532246023501）

No.	Item Code	Mark	Item Description	Qty.	Substitute	Note
--	950900100069	2	Pump Unit	1		
1	532298510037	2	Motor	1		
1.01	532298510026	2	Carbon Brush	1		
2	532298510040	2	Hose Clamp	1		
3	532298520007	2	Coupling	1		
4	532298520003	2	End Cap	1		
5	532298510027	2	Valve	1		
6	532298520006	2	Valve Block	1		
7	532298510032	2	Gear Pump	1		
8	532298520004	2	Pipe	2		
9	532298520005	2	Oil Tube	1		
10	532298510031	2	Filter	1		
11	532298510029	2	Tank	1		
12	532298510030	2	Cap-Tank	1		
13	532298510042	2	Magnetic Valve	1		
14	532298510035	2	Overflow Valve	1		
15	532298510028	2	Check Valve	1		
16	532298510036	2	Switch	1		

Chapter 3: Truck Frame

01Fork Carriage (536846038001)

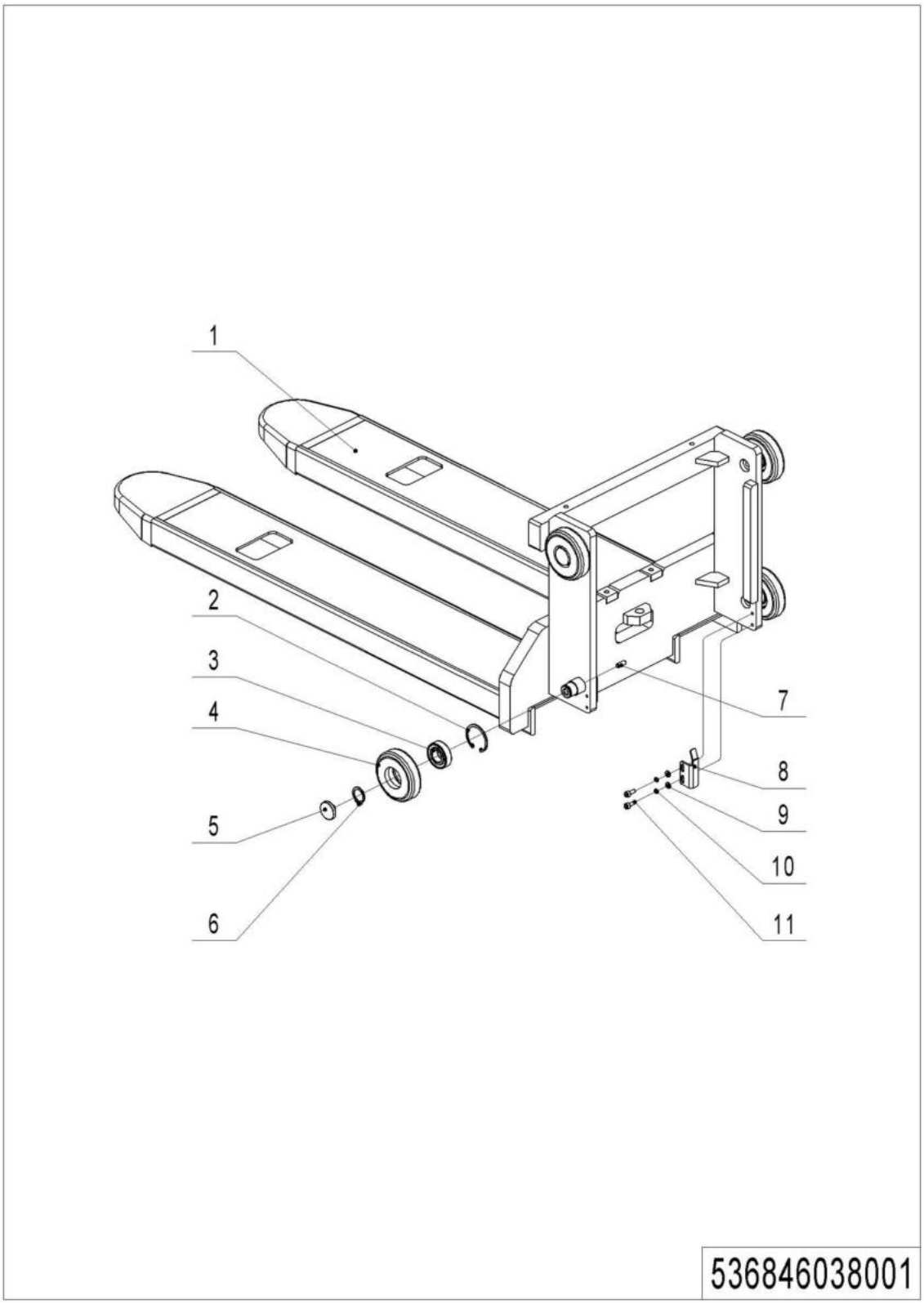

01 Fork Carriage (536846038001)

No.	Item Code	Mark	Item Description	Qty.	Substitute	Note
1	536838010010	2	Fork(,570x1150)	1		Single mast
1	536838010011	2	Fork(,685x1150)	1		Single mast
1	536838010000	2	Fork(570x1150)	1		Two-stage mast
1	536838010001	2	Fork(685x1150)	1		Two-stage mast
2	910401400016	1	Circlip	4		
3	910700200020		Bearing	4		
4	536844020011	2	Roller	4		
5	536844020012	2	Subplate	4		
6	910401300014	1	Circlip	4		
7	910200800021	1	Screw	4		
8	536838020008	2	Stop Plate	1		Single mast
9	910400100005	1	Flat Washer	2		Single mast
10	910400500005	1	Spring Washer	2		Single mast
11	910200200035	1	Screw	2		Single mast

02 Chassis (Single Stage Mast)（536846021501）

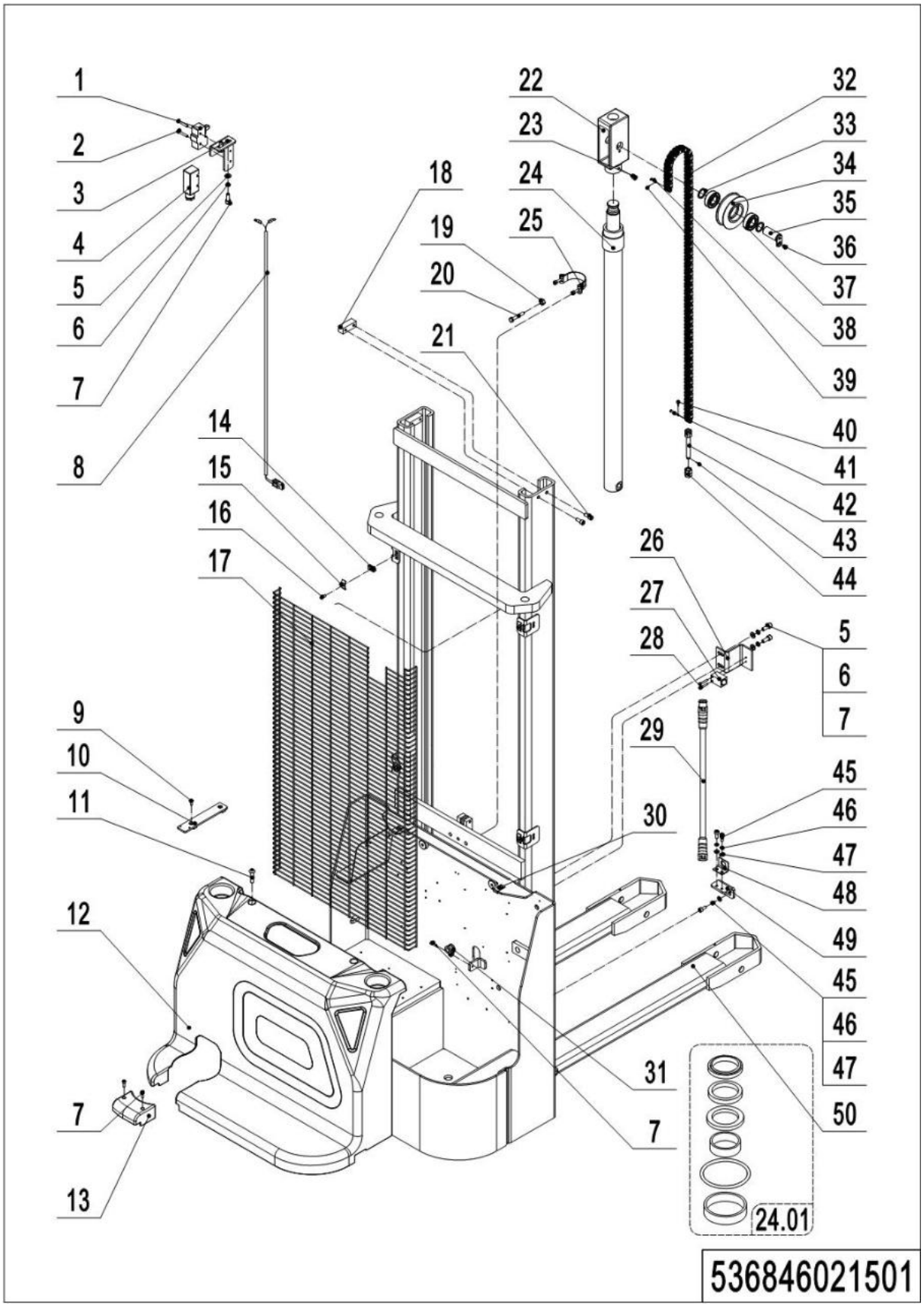

02 Chassis (Single Stage Mast)（536846021501）

No.	Item Code	Mar.	Item Description	Qty.	Substitute	Note
1	920200300001		Microswitch	1		
2	910200500027	1	Screw	2		
3	531821520006		Fixing Plate	1		
4	920200300008		Protective Cover	1		
5	910400100005	1	Flat Washer	4		
6	910400500005	1	Spring Washer	4		
7	910200200035	1	Screw	7		
8	536833010014		Wire Harness	1		
9	910200400012	1	Screw	2		
10	536821510010		Bracket	1		
11	910200300032	1	Screw	2		
12	536821520023		Cover	1		
13	536821520022		Close Plate	1		
14	940400400001	1	Cage Nut	4		
15	320443020321		Press Plate	4		
16	910200300018	1	Screw	4		
17	536821520033		Protective Frame	1		1600
17	536821520034		Protective Frame	1		2000
18	536821520040		Stop Plate	2		
19	910300100007	1	Nut	1		
20	910100300039	1	Bolt	1		
21	910200200057	1	Screw	4		
22	536844020014		Yoke	1		
23	910200200051	1	Screw	1		
24	532024010001		Cylinder	1		1600
24	532024010000		Cylinder	1		2000
24.01	532098510010	1	Seal Kit	1		
25	940800600002		Hoop	1		
26	532021520053		Fixing Plate	1		

02 Chassis (Single Stage Mast)（536846021501）Continuation

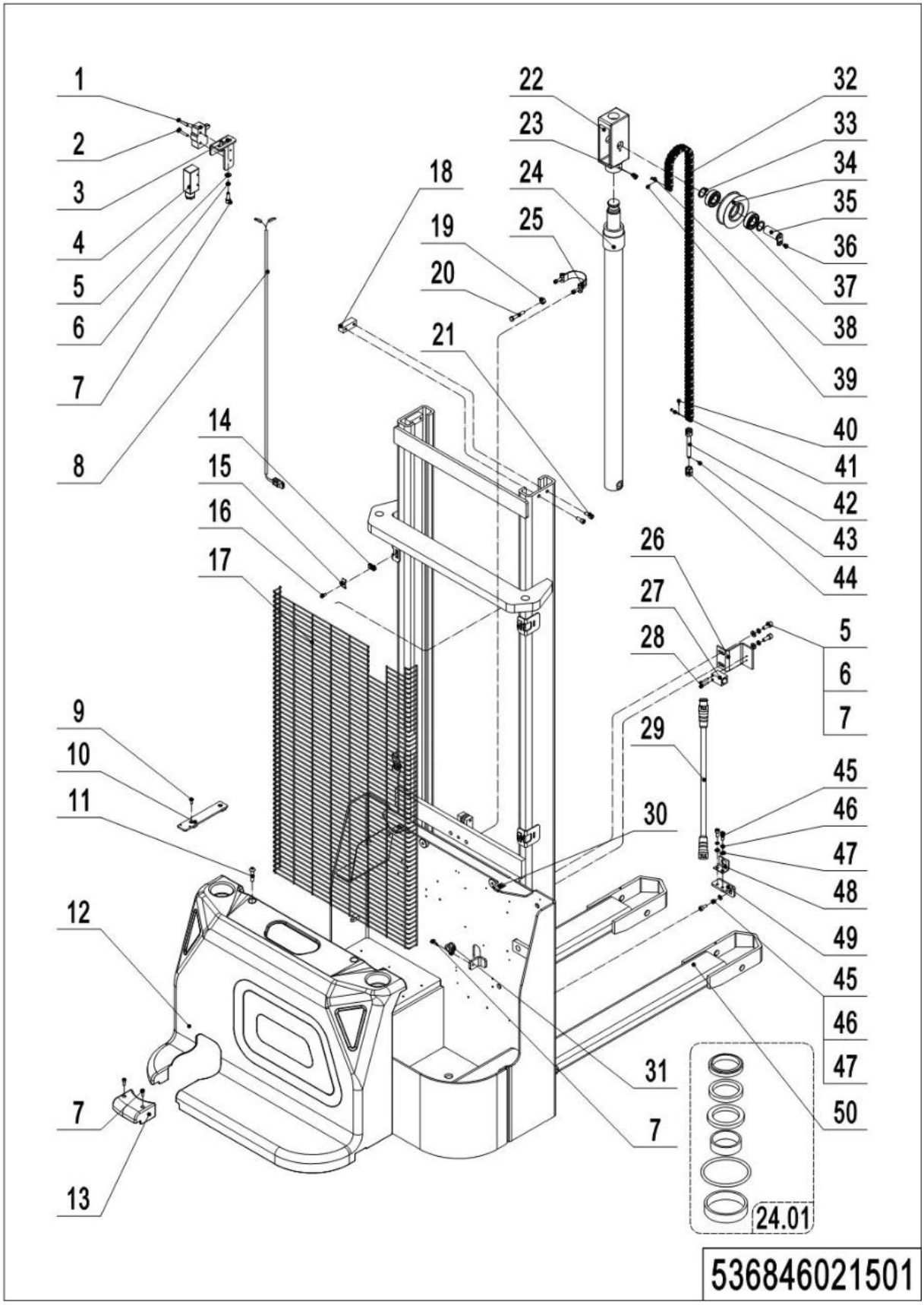

02 Chassis (Single Stage Mast)（536846021501）Continuation

No.	Item Code	Mark	Item Description	Qty.	Substitute	Note
27	920200400030		Proximity Switch	1		
28	910200500015		Screw	2		
29	921500100077		Cable	1		
30	940400400003		Cage Nut	2		
31	951000100001		Hose Clamp	1		
32	272344515001		Chain	1		1600
32	536821510008		Chain			2000
33	940600500006		Washer	2		
34	940200400002		Sprocket	1		
35	533243510005		Pin	1		
36	910200400016	1	Screw	1		
37	910700200020		Bearing	2		
38	941100800006		Pin	1		
39	910600600015	1	Cotter Pin	1		
40	910600600006	1	Cotter Pin	1		
41	941100800010		Pin	1		
42	206044520060		Chain Anchor	1		
43	910600600019	1	Cotter Pin	1		
44	910300200008	1	Nut	2		
45	910200200022	1	Screw	4		
46	910400500004	1	Spring Washer	4		
47	910400100004	1	Flat Washer	4		
48	921300300003		Holder	1		
49	531821520031		Mounting Plate	1		
50	536821510011	2	Chassis(1600,570x1150	1		
50	536821510012	2	Chassis(2000,570x1150	1		
50	536821510013	2	Chassis(1600,685x1150	1		
50	536821510014	2	Chassis(2000,685x1150	1		

03 Chassis (Two Stage Mast)（536846021502）

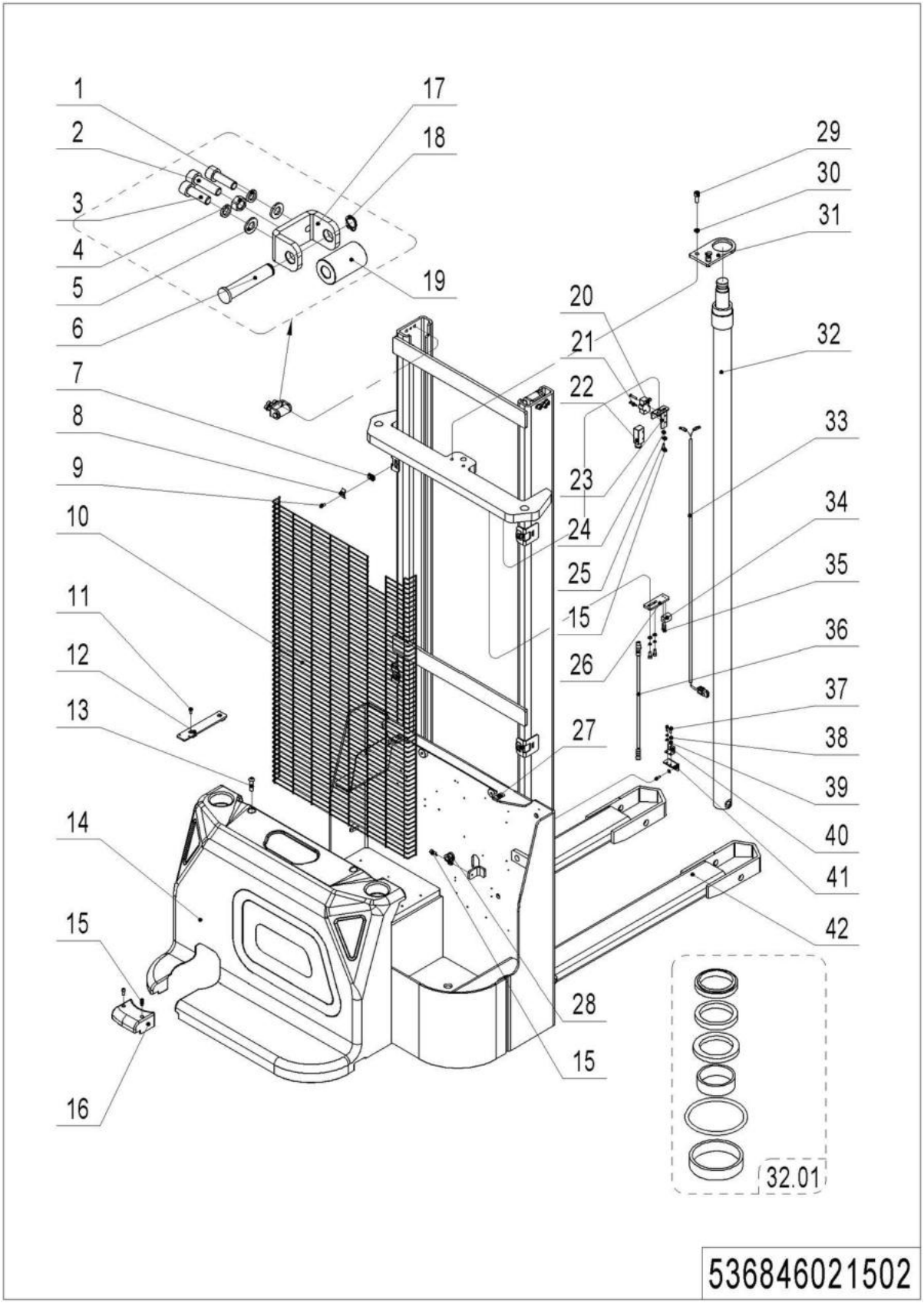

03 Chassis (Two Stage Mast)（536846021502）

No.	Item Code	Ma	Item Description	Qty.	Substitute	Note
1	910400500006		Spring Washer	4		
2	910200200059		Screw	2		
3	910200200058		Screw	4		
4	910300100006		Nut	2		
5	910400100006		Flat Washer	4		
6	401744020001		Pin	1		
7	940400400001		Cage Nut	4		
8	320443020321		Press Plate	4		
9	910200300018		Screw	4		
10	536821520030		Protective Frame	1		2900
10	536821520031	2	Protective Frame	1		3200
10	536821520032	2	Protective Frame	1		3500
11	910200400012		Screw	2		
12	536821510010		Bracket	1		
13	910200300032		Screw	2		
14	536821520023		Cover	1		
15	910200200035		Screw	7		
16	536821520022		Close Plate	1		
17	536821520036		Wheel Carrier	1		
18	910401300003		Circlip	1		
19	401744020000		Roller	1		
20	920200300001		Microswitch	1		
21	910200500027		Screw	2		
22	920200300008		Protective Cover	1		
23	531821520006		Fixing Plate	1		
24	910400100005		Flat Washer	4		
25	910400500005		Spring Washer	4		
26	531821520007		Fixing Plate	1		
27	940400400003		Cage Nut	2		

03 Chassis (Two Stage Mast)（536846021502）Continuation

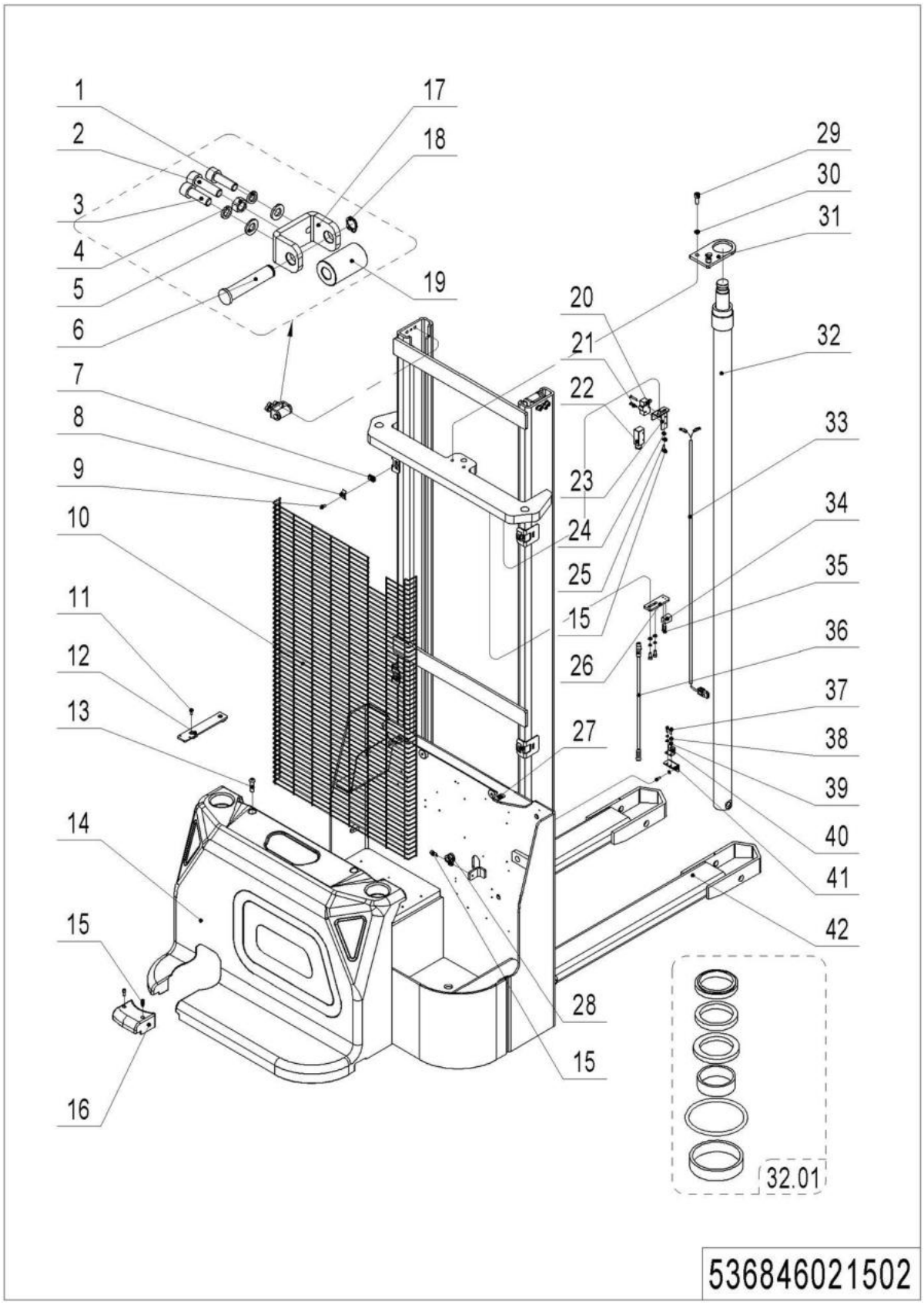

03 Chassis (Two Stage Mast)（536846021502）Continuation

No.	Item Code	Ma	Item Description	Qty.	Substitute	Note
28	951000100001	1	Hose Clamp	1		
29	910200200076	1	Screw	2		
30	910400500007	1	Spring Washer	2		
31	532644020097	2	Fixing Plate	1		
32	532024010002	2	Cylinder	1		2900
32	532024010004	2	Cylinder	1		3200
32	532024010003	2	Cylinder	1		3500
32.01	532098510010	1	Seal Kit	1		
33	536833010014		Wire Harness	1		
34	920200400030		Proximity Switch	1		
35	910200500015	1	Screw	2		
36	921500100077	2	Cable	1		
37	910200200022	1	Screw	4		
38	910400500004	1	Spring Washer	4		
39	910400100004	1	Flat Washer	4		
40	921300300003		Holder	1		
41	531821520031	2	Mounting Plate	1		
42	536821510000	2	Chassis(2900,570x1150)	1		
42	536821510001	2	Chassis(3200,570x1150)	1		
42	536821510002	2	Chassis(3500,570x1150)	1		
42	536821510003	2	Chassis(2900,685x1150)	1		
42	536821510004	2	Chassis(3200,685x1150)	1		
42	536821510005	2	Chassis(3500,685x1150)	1		

04 Inner Mast Assembly（536846044001）

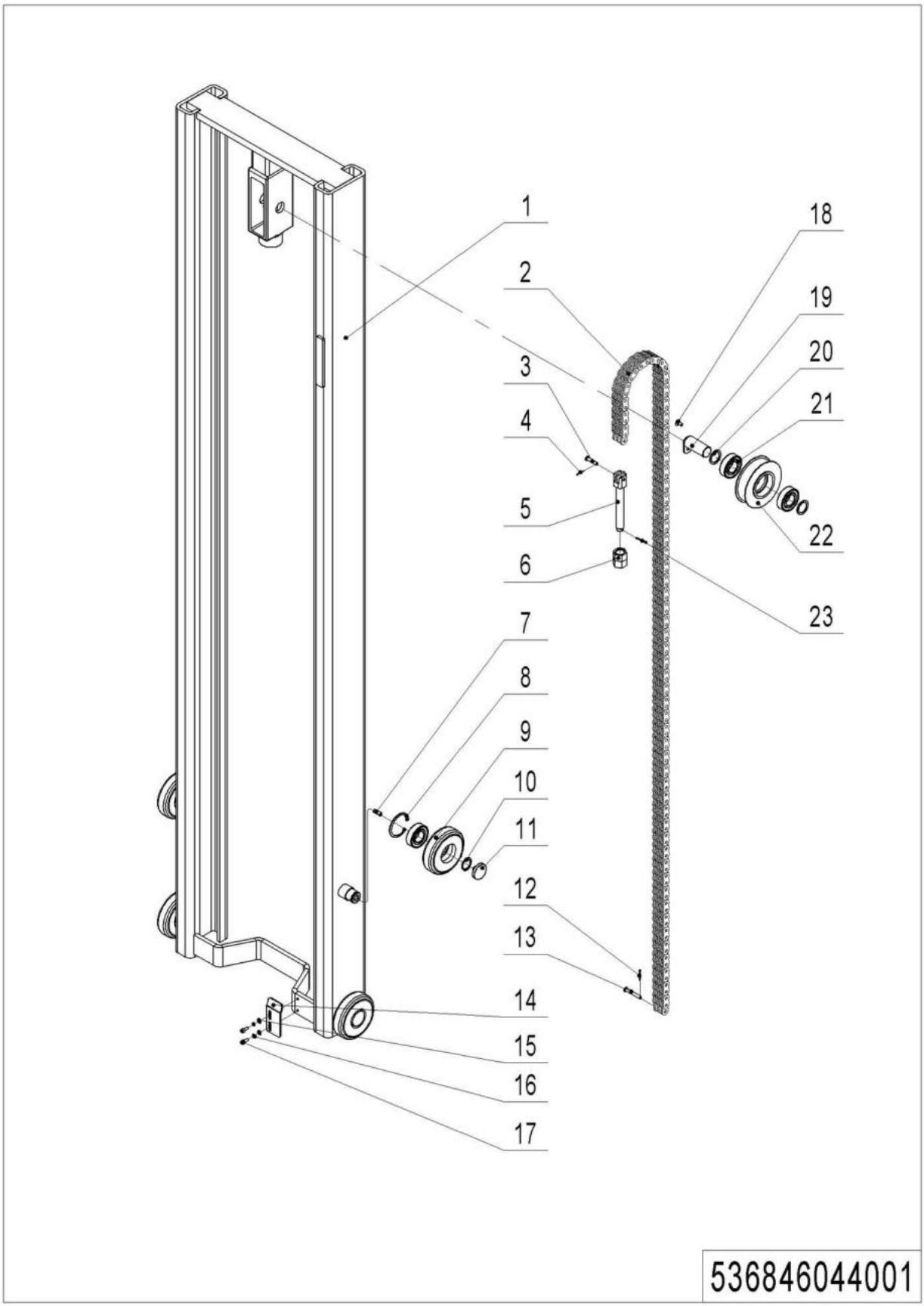

04 Inner Mast Assembly（536846021501）

No.	Item Code	Ma	Item Description	Qty.	Substitute	Note
1	536844010000	2	Inner Mast(2900)	1		
1	536844010001	2	Inner Mast(3200)	1		
1	536844010002	2	Inner Mast(3500)	1		
2	271544515007	2	Chain	1		2900
2	536821510009	2	Chain	1		3200
2	206044510098	2	Chain	1		3500
3	941100800010		Pin	1		
4	910600600006	1	Cotter Pin	1		
5	206044520060		Chain Anchor	1		
6	910300200008	1	Nut	2		
7	910200800021	1	Screw	4		
8	910401400016	1	Circlip	4		
9	536844020011	2	Roller	4		
10	910401300014	1	Circlip	4		
11	536844020012	2	Subplate	4		
12	910600600015	1	Cotter Pin	1		
13	941100800006	1	Pin	1		
14	536844020013	2	Stop Plate	1		
15	910400100004	1	Flat Washer	2		
16	910400500004	1	Spring Washer	2		
17	910200200022	1	Screw	2		
18	910200400016	1	Screw	1		
19	533243510005		Pin	1		
20	940600500006	1	Washer	2		
21	910700200020		Bearing	6		
22	940200400002		Sprocket	1		
23	910600600019	1	Cotter Pin	1		

Chapter 4: Steering System, Braking System, Wheels

01 Tiller Unit（536846011001）

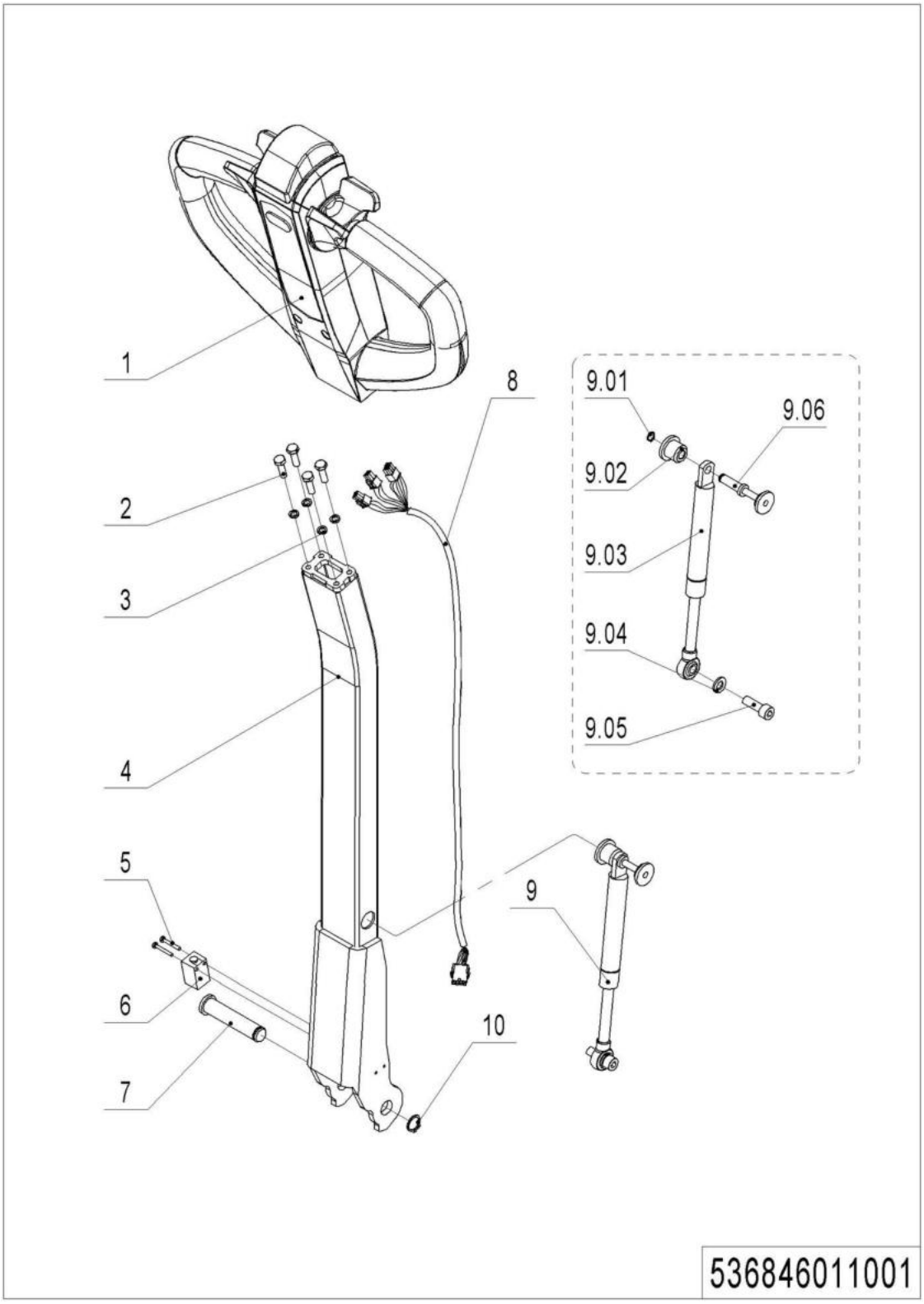

01 Tiller Unit（536846011001）

No.	Item Code	Mark	Item Description	Qty.	Substitute	Note
1	----------	5	Tiller	1		Check 536846011002
2	910100300011	1	Bolt	4		
3	910400500005	1	Spring Washer	4		
4	536811010000	2	Tiller	1		
5	941101100001	1	Screw	2		
6	508033010011		Proximity Switch	1		
7	508011020004		Pin	1		
8	536833010001	2	Wire Harness	1		
9	508098510084		Gas Spring Kit	1		
9.01	910401300001	1	Circlip	1		
9.02	508011020005		Fixing Base	1		
9.03	532211020003		Gas Spring	1		
9.04	910400100006	1	Flat Washer	1		
9.05	910200200058	1	Screw	1		
9.06	508011010002		Pin	1		
10	910401300006	1	Circlip	1		

02 Tiller（536846011002）

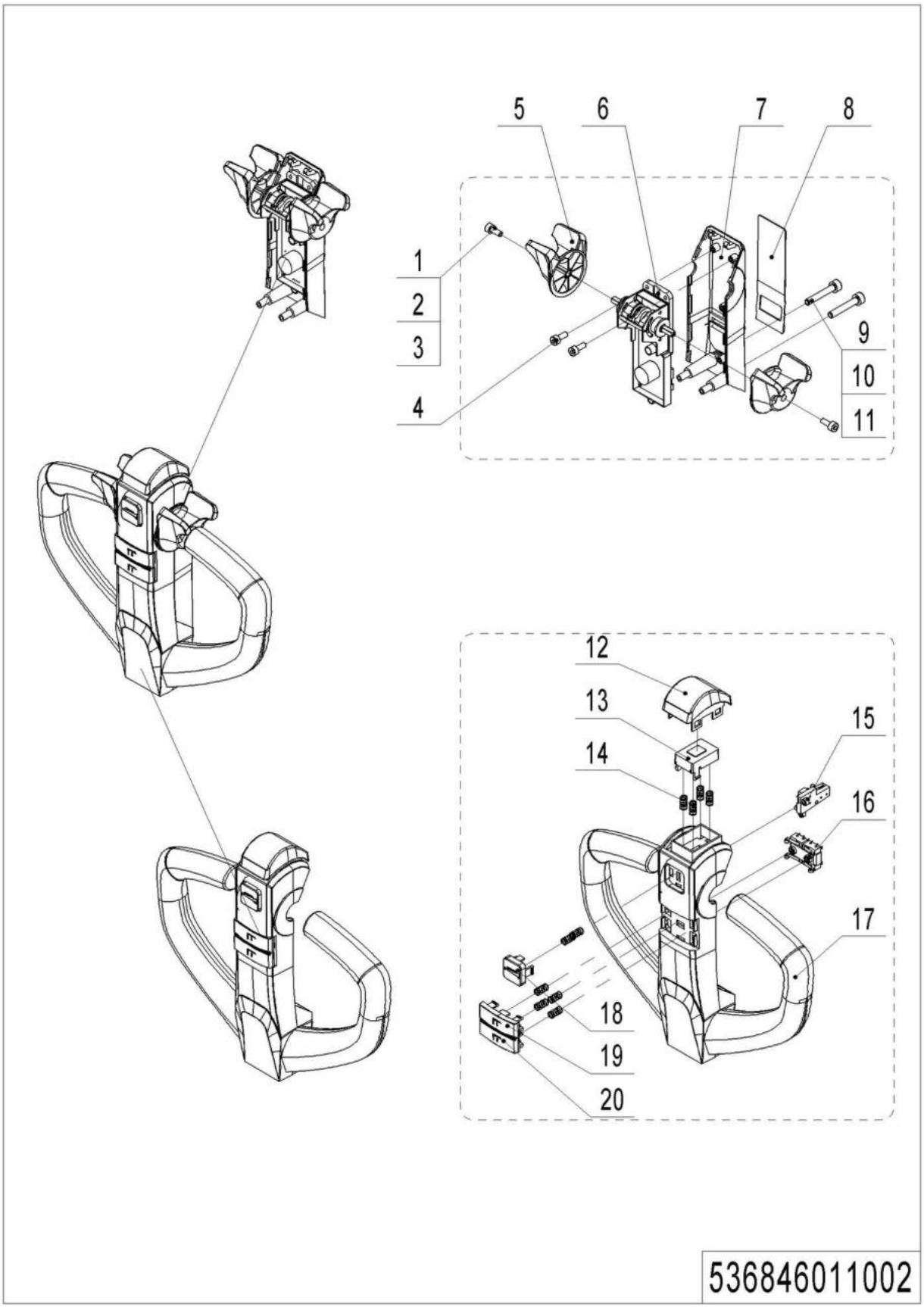

02 Tiller（536846011002）

No.	Item Code	Mark	Item Description	Qty.	Substitute	Note
1	910200200004	1	Screw	2		
2	910400500002	1	Spring Washer	2		
3	910400100002	1	Flat Washer	2		
4	910200500022	1	Screw	4		
5	537098520008	2	Acceleration Switch	2		
6	536898520009	2	Accelerator	1		
7	536898520011	2	Cover	1		
8	536898520012	2	Button	1		
9	910200200159	1	Screw	2		
10	910400500004	1	Spring Washer	2		
11	910400100004	1	Flat Washer	2		
12	537098520007	2	Switch	1		
13	537098520006	2	Cover	1		
14	537098520005	1	Spring	10		
15	537098510001	2	Wire Harness	1		
16	537098510003	2	Wire Harness	1		
17	537098520001	2	Plastic Handle	1		
18	537098520004	2	Horn Button	1		
19	537098520003	2	Switch	1		
20	537098520002	2	Switch	1		

03 Load Roller（536846017001）

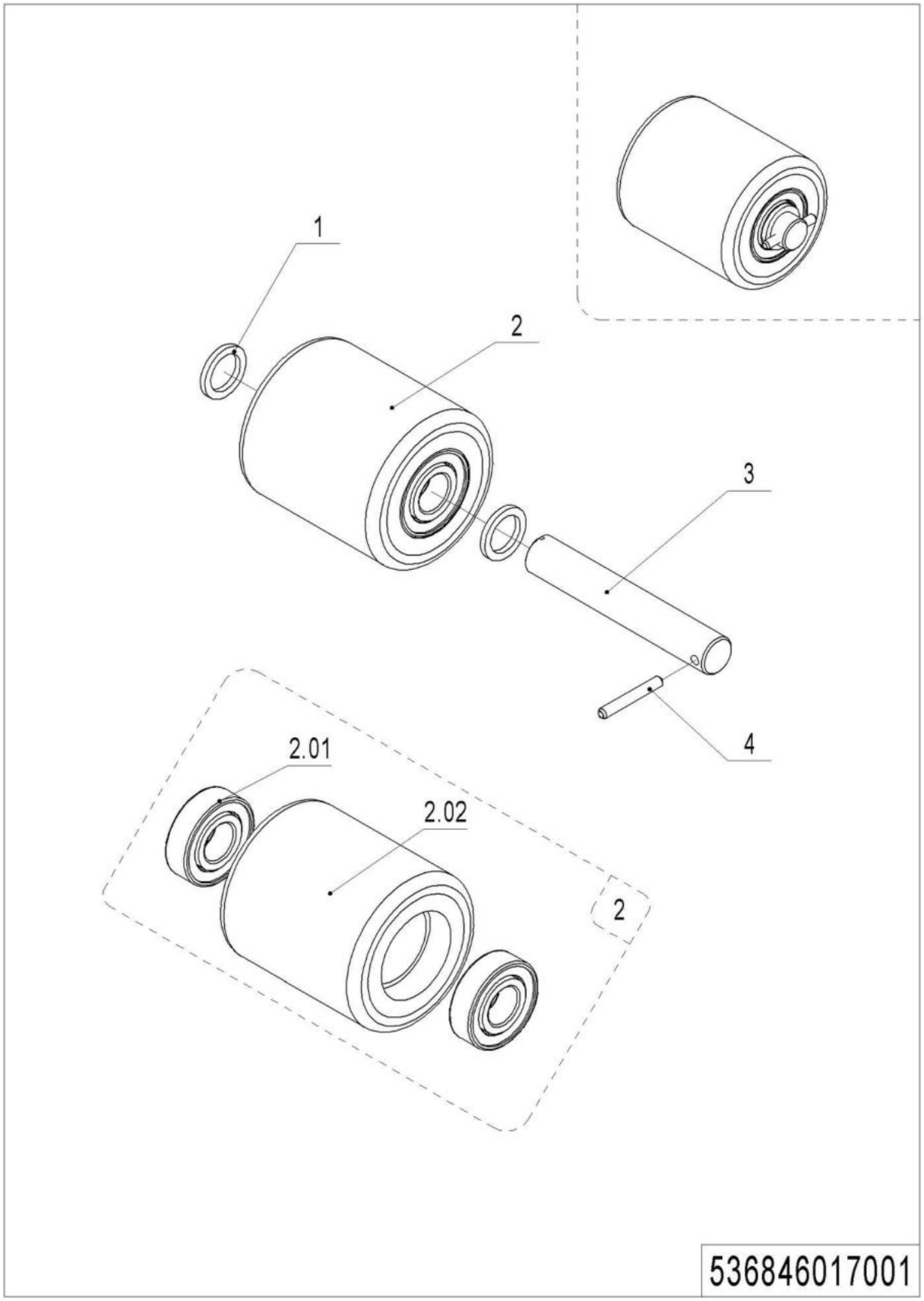

03 Load Roller（536846017001）

No.	Item Code	Mark	Item Description	Qty.	Substitute	Note
1	940600500050	1	Washer	2		
2	532298510003		Wheel	1		
2.01	910700200019		Bearing	2		
2.02	940300300011		WheelΦ84x93	1		
3	536817020000		Axle	1		
4	910600400028	1	Spring Pin	1		

04 Caster（532246016501）

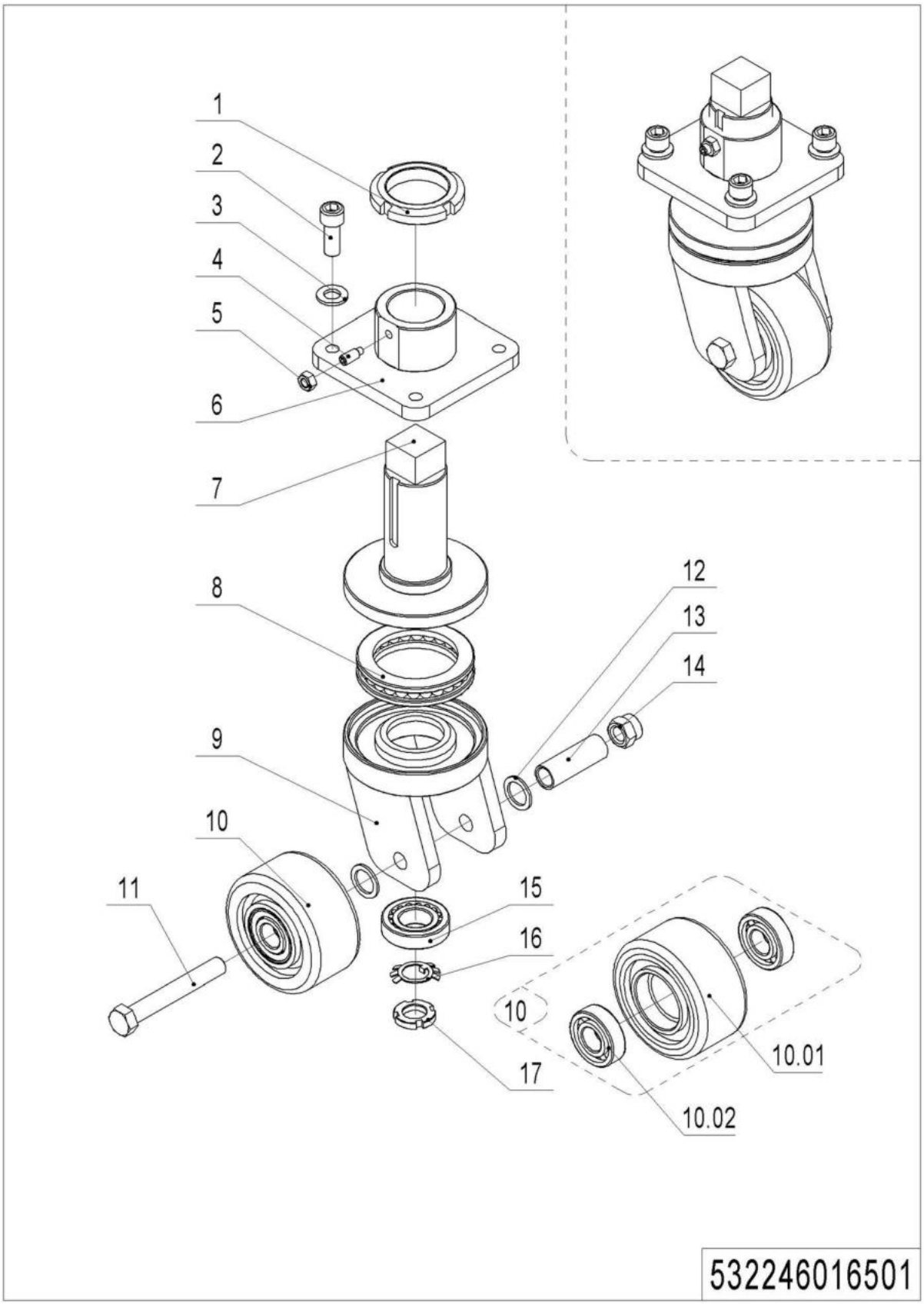

04 Caster（532246016501）

No.	Item Code	Mark	Item Description	Qty.	Substitute	Note
1	941100900004	1	Nut	1		
2	910200200098	1	Screw	4		
3	910400100008	1	Flat Washer	4		
4	910201000012	1	Screw	1		
5	910300100006	1	Nut	1		
6	532216510003	2	Fixing Base	1		
7	532216510002	2	Axle	1		
8	910700700011		Bearing	1		
9	532216510001	2	Wheel Carrier	1		
10	532298510004		Caster Assembly	1		
10.01	940300300030		WheelΦ100x50	1		
10.02	910700200019		Bearing	2		
11	910100100069	1	Bolt	1		
12	940600500005	1	Washer	4		
13	532216520006		Sleeve	1		
14	910300500007	1	Nut	1		
15	910700600001		Bearing	1		
16	910400900002	1	Lock Washer	1		
17	910300700008	1	Nut	1		

Chapter 5: Electrical Parts

01 Display Assembly（536846010001）

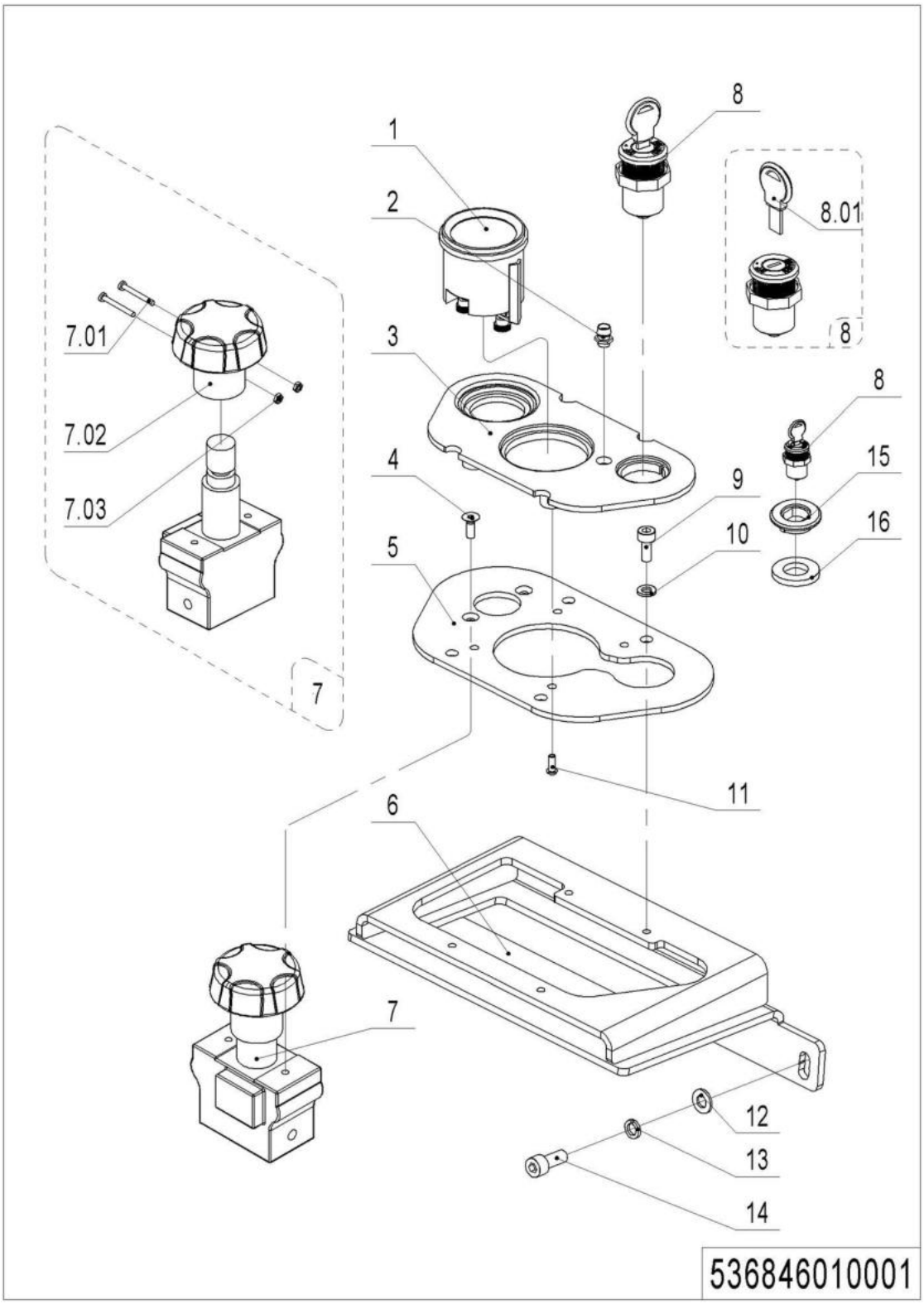

01 Display Assembly（536846010001）

No.	Item Code	Mark	Item Description	Qty.	Substitute	Note
1	921100100071		Battery Indicator	1		
1	921100100078		Coulombmeter	1		锂电用
2	922000100024	1	Lamp Holder	1		
3	536810020002	2	Panel	1		
4	910200400011	1	Screw	2		
5	534710020005	2	Fixing Base	1		
6	536810010000	2	Mounting Plate	1		
7	920200100001		Emergency Button	1		
7.01	910200500016	1	Screw	2		
7.02	505698520029		Button	1		
7.03	910300100002	1	Nut	2		
8	920200200001		Key Switch	1		
8	920200200021		Key Switch	1		Only For Lithium Battery
8.01	505698520031		Key	1		
8.01	920200200024		Key	1		Only For Lithium Battery
9	910200200033	1	Screw	4		
10	910400100005	1	Flat Washer	4		
11	910201300001	1	Screw	4		
12	910400100006	1	Flat Washer	4		
13	910400500006	1	Spring Washer	4		
14	910200200057	1	Screw	4		
15	531810020002		Mounting Base	1		Only For Lithium Battery
16	910400100012	1	Flat Washer	1		Only For Lithium Battery

02 Traction Battery（536846037001）

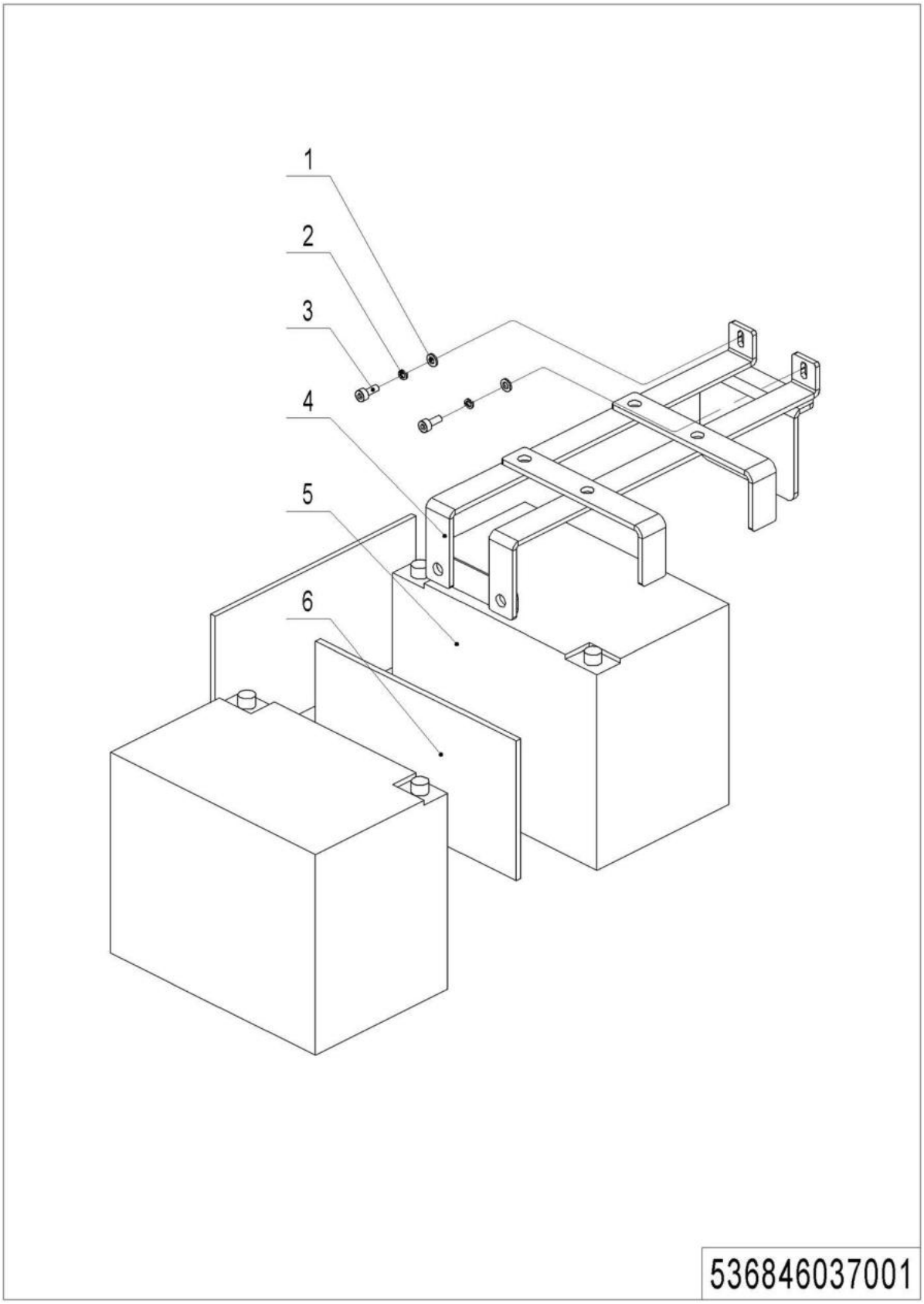

02 Traction Battery（536846037001）

No.	Item Code	Mark	Item Description	Qty.	Substitute	Note
1	536837010001	2	Press Plate	1		
2	910400100005	1	Flat Washer	2		
3	910200200034	1	Screw	2		
4	910400500005	1	Spring Washer	2		
5	920600100001		Battery12V85Ah	2		
6	531837020011		Crash Pad	2		

03 Traction Battery (Lithium Battery)（536846037002）

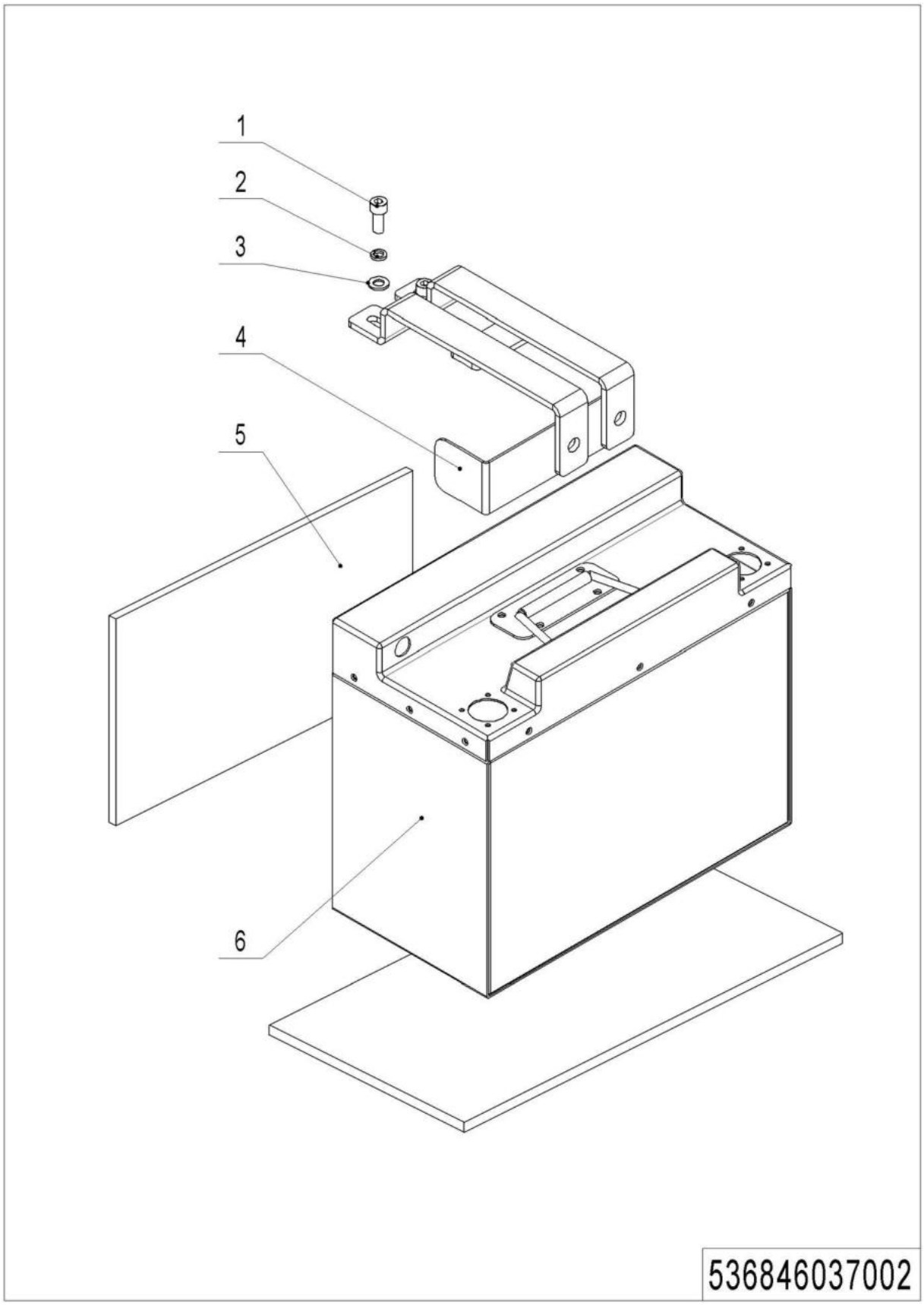

03 Traction Battery (Lithium Battery)（536846037002）

No.	Item Code	Mark	Item Description	Qty.	Substitute	Note
1	910200200057	1	Screw	2		
2	910400500006	1	Spring Washer	2		
3	910400100006	1	Flat Washer	2		
4	536837010002	2	Press Plate	1		
5	531837020011		Crash Pad	2		
6	920600100082		Li Battery24V60Ah	1		

04 Wire Harness（536846033001）

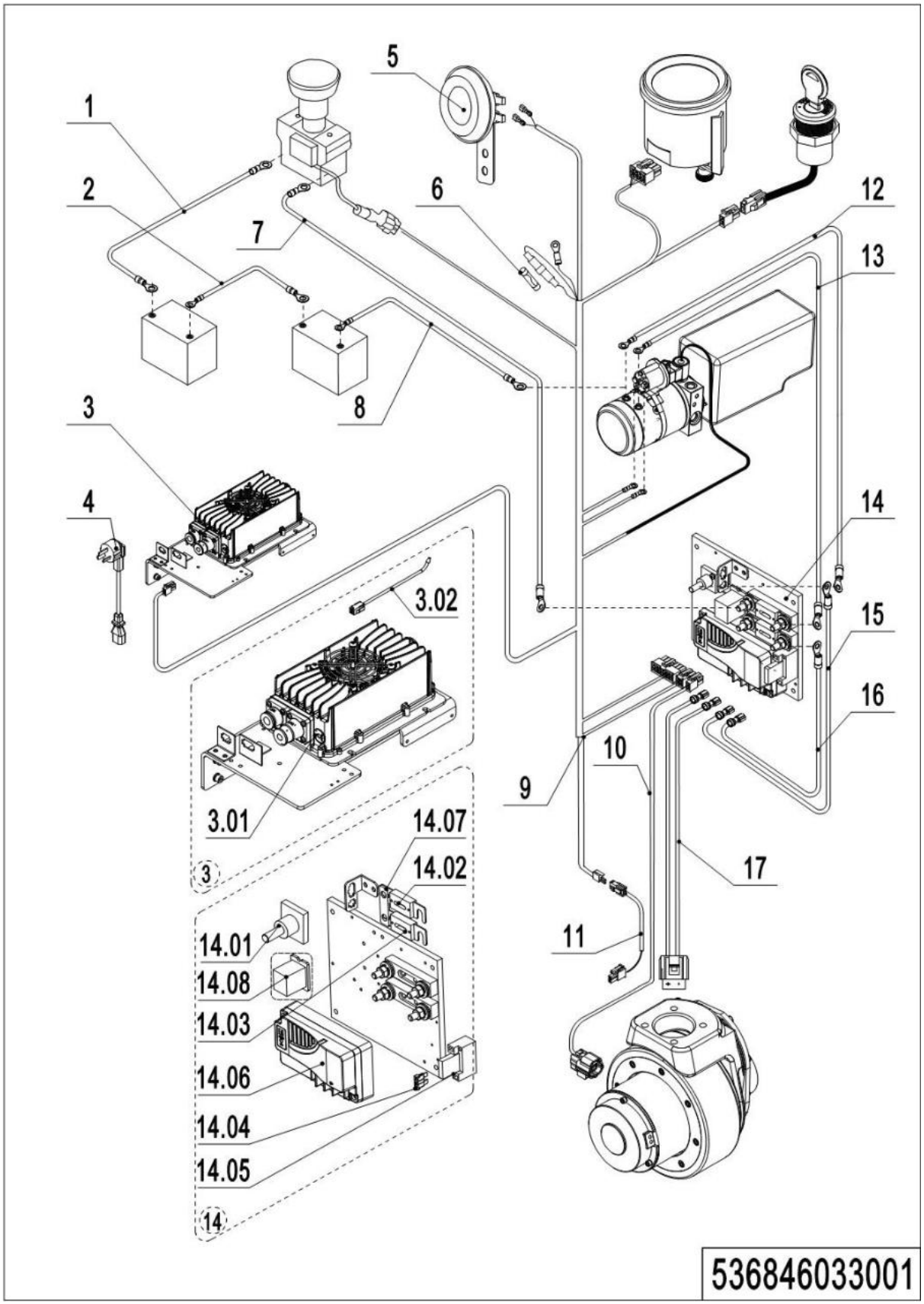

04 Wire Harness（536846033001）

No.	Item Code	Mark	Item Description	Qty.	Substitute	Note
1	536833010006		Cable	1		
2	536833010007		Cable	1		
3	536836510000		Charger 24V10A(Aisa)	1		
3	536836510001		Charger 24V10A(ENG)	1		
3	536836510002		Charger 24V10A(USA)	1		
3	536836510003		Charger 24V10A(EU)	1		
3	536836510004		Charger 24V10A(AUS)	1		
3	536836510005		Charger 24V10A(ITY)	1		
3	536836510006		Charger 24V10A(SWD)	1		
3	536836510007		Charger 24V25A(Aisa)	1		
3	536836510008		Charger 24V25A(EU)	1		
3	536836510009		Charger 24V25A(AUS)	1		
3	536836510010		Charger 24V25A(ENG)	1		
3	536836510011		Charger 24V25A(USA)	1		
3	536836510012		charger24V/25A(ARG)	1		
3	536836510013		Charger 24V25A(ITY)	1		
3	536836510014		Charger 24V25A(SWD)	1		
3	536836510015		charger24V/25A(ISR)	1		
3	536836510016		Charger 24V25A(BRA)	1		
3.01	921000100057		Charger24V10A	1		
3.01	921000100070		Charger 24V25A	1		
3.02	922000100025		Lamp	1		
4	921500200008		Spring Cable（Asia）	1		
4	921500200004		Spring Cable(ENG)	1		
4	921500200002		Spring Cable(USA)	1		
4	921500200005		Spring Cable(EU)	1		
4	921500200003		Spring Cable(AUS)	1		
4	921500200006		Spring Cable(ITY)	1		
4	921500200007		Spring Cable(SWD)	1		

04 Wire Harness（536846033001）Continuation

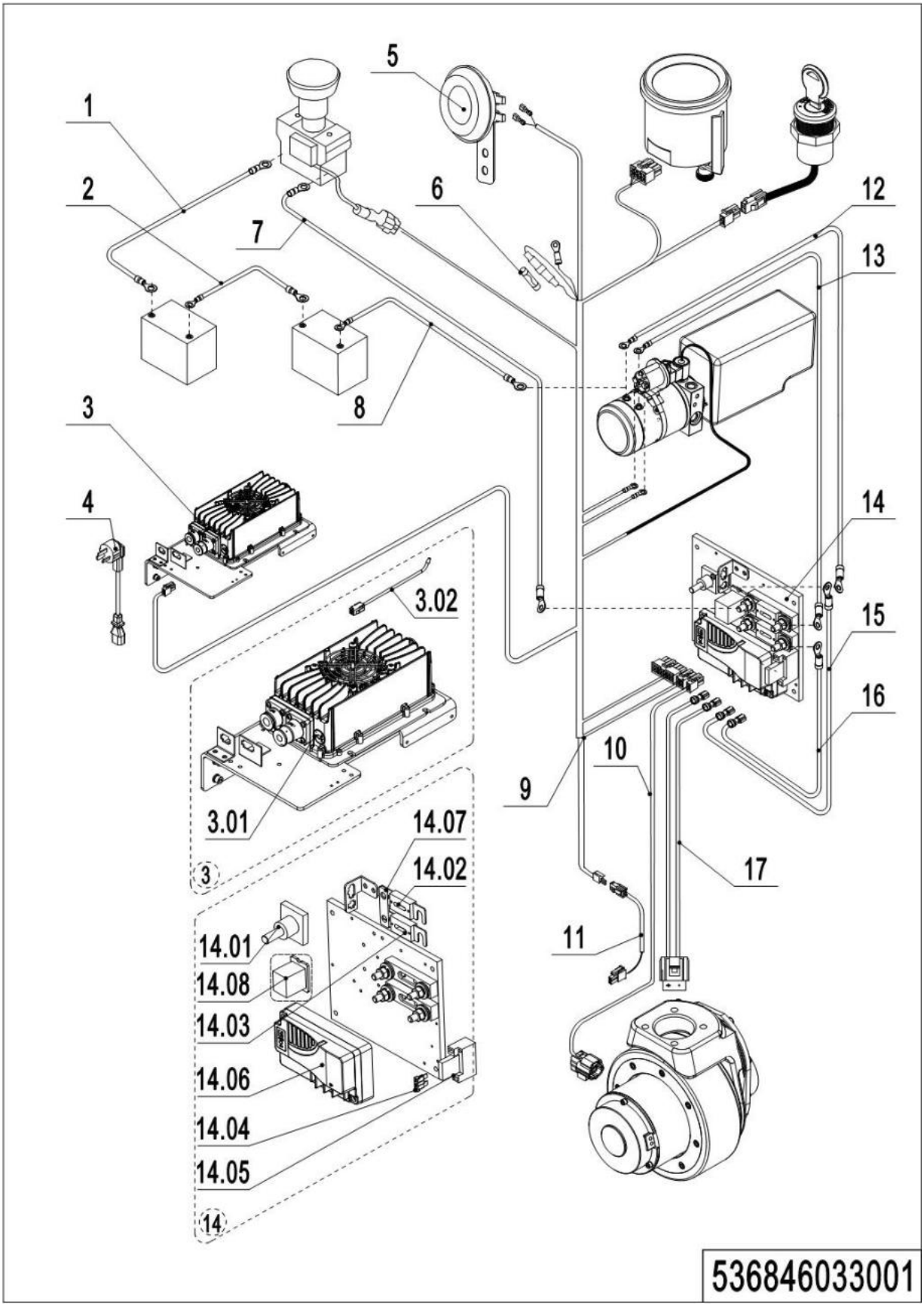

04 Wire Harness（536846033001）Continuation

No.	Item Code	Mark	Item Description	Qty.	Substitute	Note
5	920500100001		Horn	1		
6	920100300001		Fuse	1		
7	536833010009		Cable	1		
8	536833010008		Cable	1		
9	536833010000		Wire Harness	1		
9	536833010015		Wire Harness	1		
10	536833010002		Wire Harness	1		
11	536833010016		Wire Harness	1		
12	536833010012		Cable	1		
13	536833010010		Cable	1		
14	536833010013		Electronic Components	1		
14.01	920100400001		Fuse Holder	1		
14.02	920100100007		Fuse	1		
14.03	920100100003		Fuse	1		
14.04	920100200002		Fuse	1		
14.05	920100400006		Fuse Holder	1		
14.06	921400100081		Controller	1		
14.07	505633020003		Copper Busbar	1		
14.08	532033010023		Module	1		
15	536833010005		Cables	1		
16	536833010004		Cables	1		
17	536833010003		Wire Harness	1		

Chapter 6: Special Parts

01 Load Backrest(Optional)（532646040501）

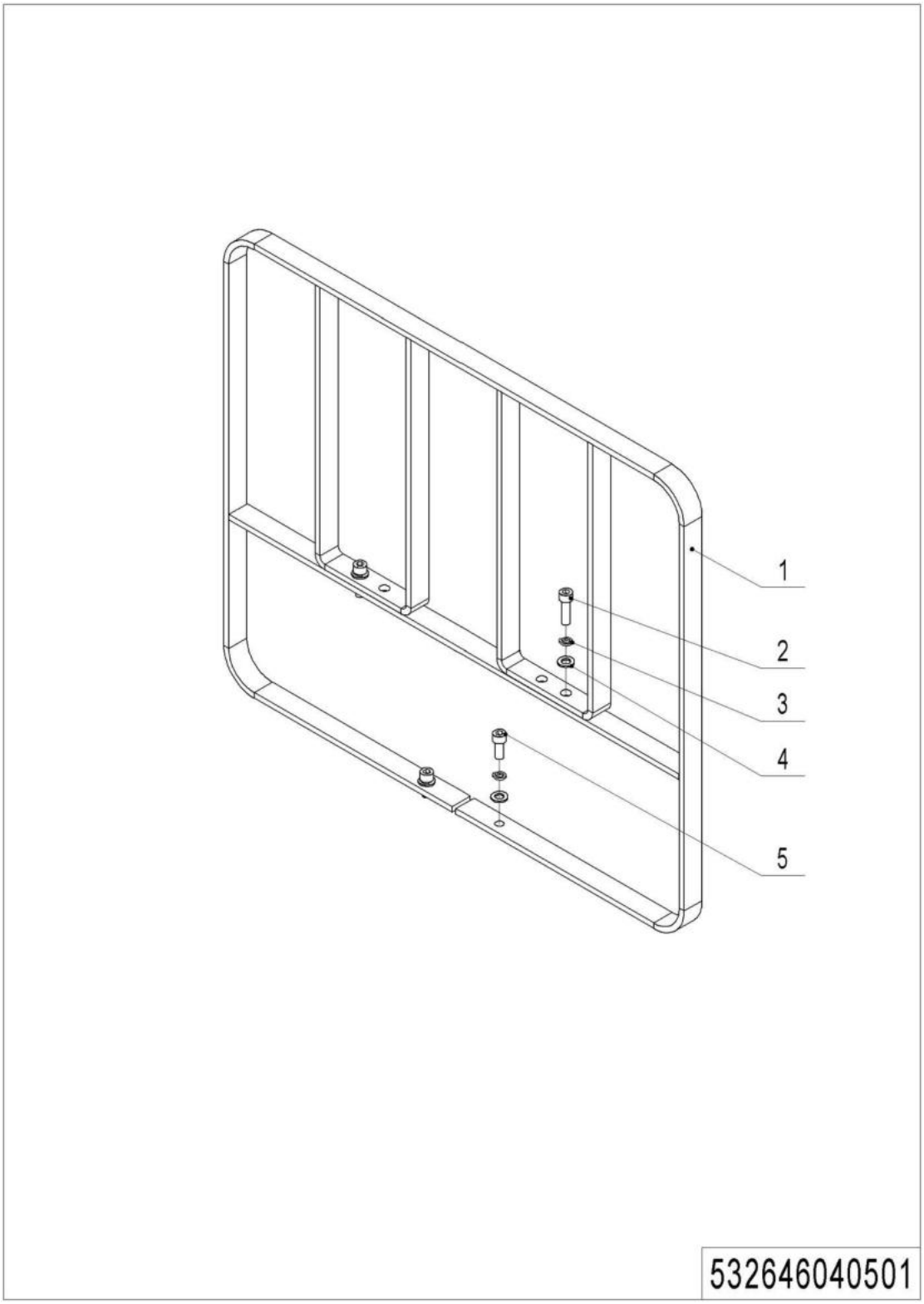

01 Load Backrest(Optional)（532646040501）

No.	Item Code	Mark	Item Description	Qty.	Substitute	Note
1	532640510001	2	Load Backrest	1		
2	910200200077	1	Screw	2		
3	910400500007	1	Spring Washer	4		
4	910400100007	1	Flat Washer	4		
5	910200200076	1	Screw	2		

Chapter 7: Others

01 Label and Decal(EU)（536846047001）

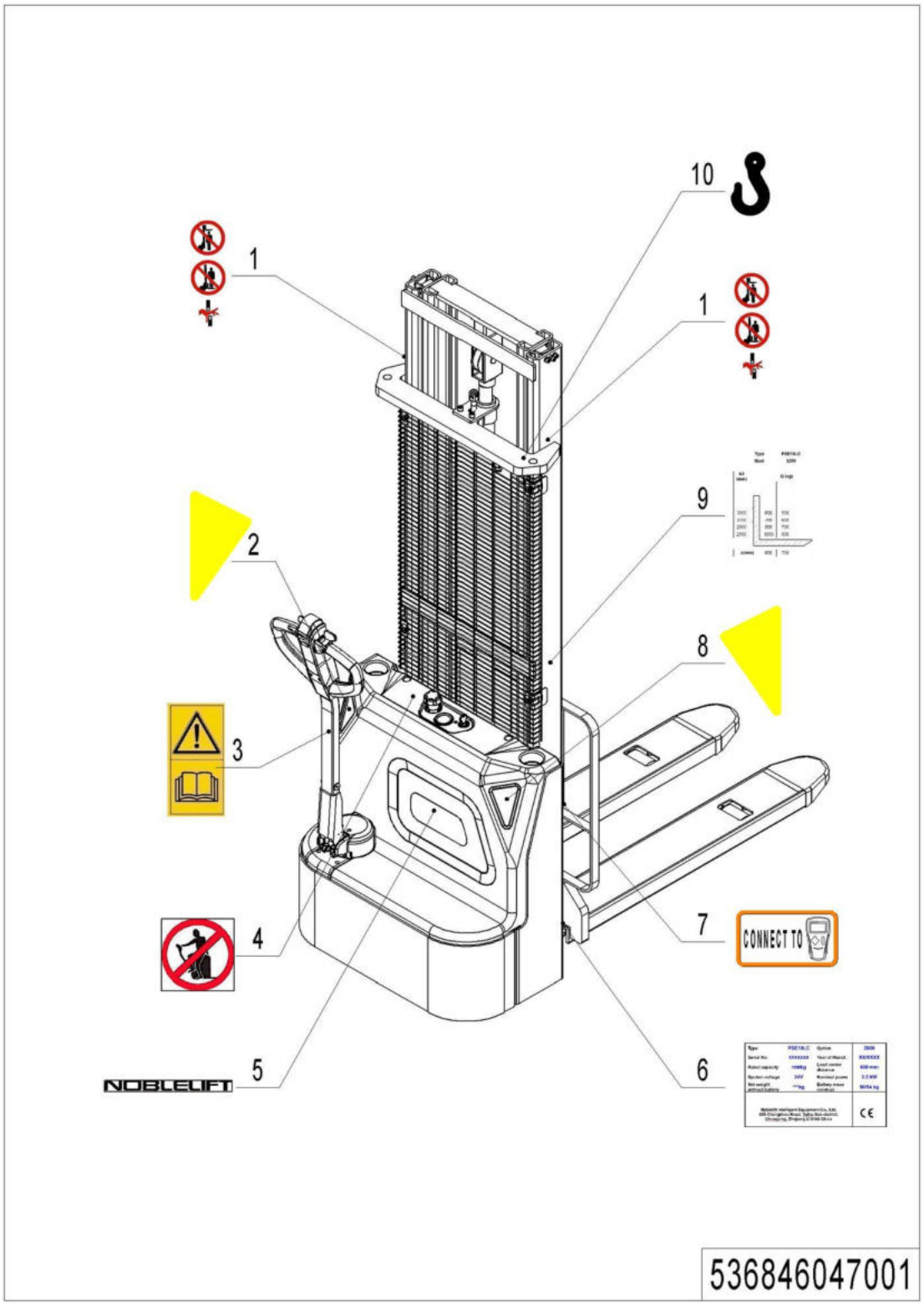

01 Label and Decal(EU)（536846047001）

No.	Item Code	Mark	Item Description	Qty.	Substitute	Note
1	941200100004		Label	2		
2	536847020001		Label	1		
3	941200300002		Label	1		
4	941200100003		Label	1		
5	941200500002		Label	1		Depends On Customer
6	536847502001		Identification Plate	1		
7	941200300019		Label	1		
8	536847020000		Label	1		
9	536847502002		Load Capacity Diagram	1		
10	941200300001		Label	2		

02 Label and Decal(USA)（536846047002）

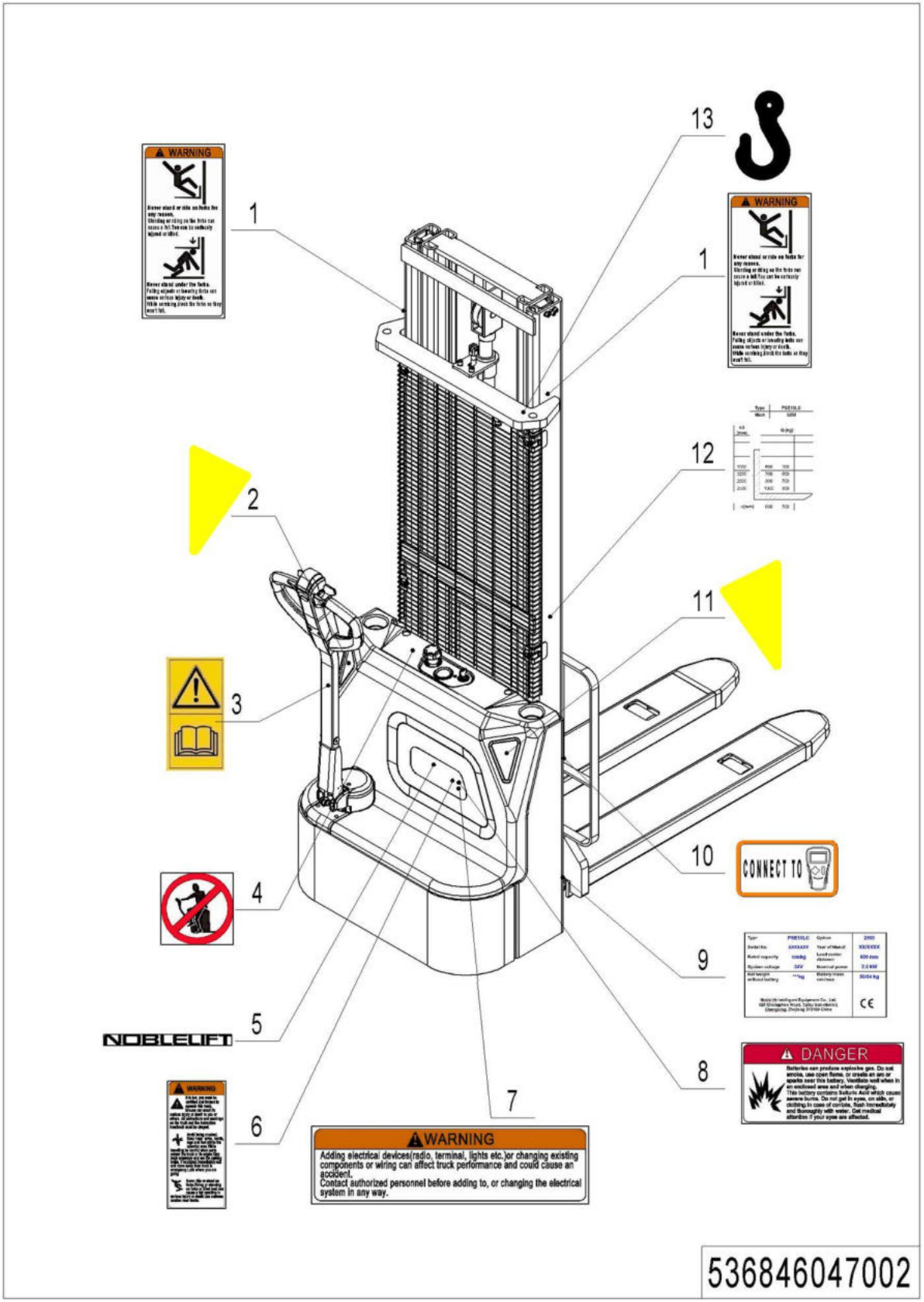

02 Label and Decal(USA)（536846047002）

No.	Item Code	Mark	Item Description	Qty.	Substitute	Note
1	941200100016		Label	1		
2	536847020001		Label	1		
3	941200300002		Label	1		
4	941200100003		Label	1		
5	941200500002		Label	1		Depends On Customer
6	941200100009		Label	1		
7	941200100010		Label	1		
8	941200100013		Label	1		
9	536847502001		Identification Plate	1		
10	941200300019		Label	1		
11	536847020000		Label	1		
12	536847502002		Load Capacity Diagram	1		
13	941200300001		Label	2		

Appendix

01 Electrical Circuit Diagram（536846045501）

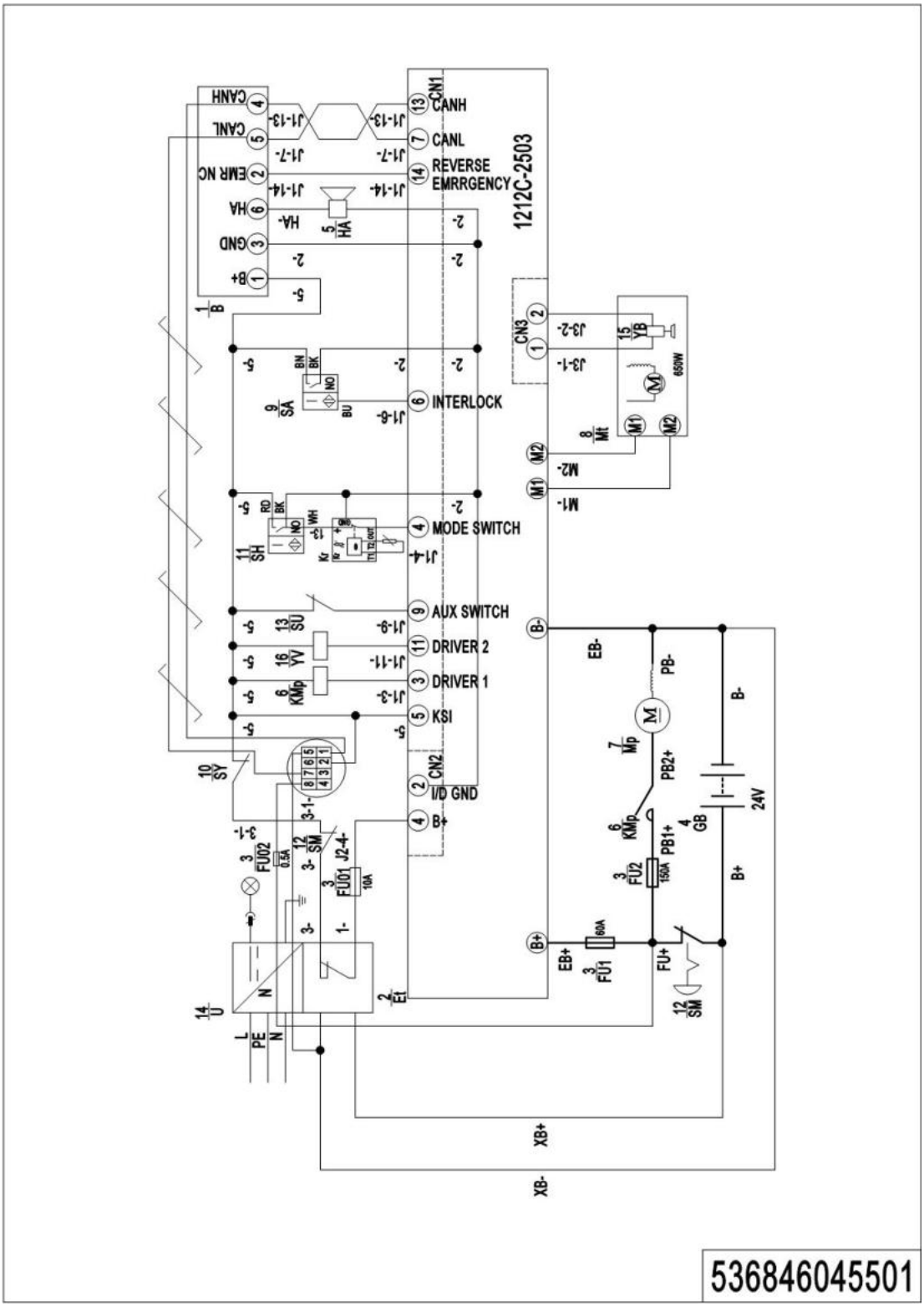

02 Electrical Circuit Diagram (Lithium Battery)（536846045502）

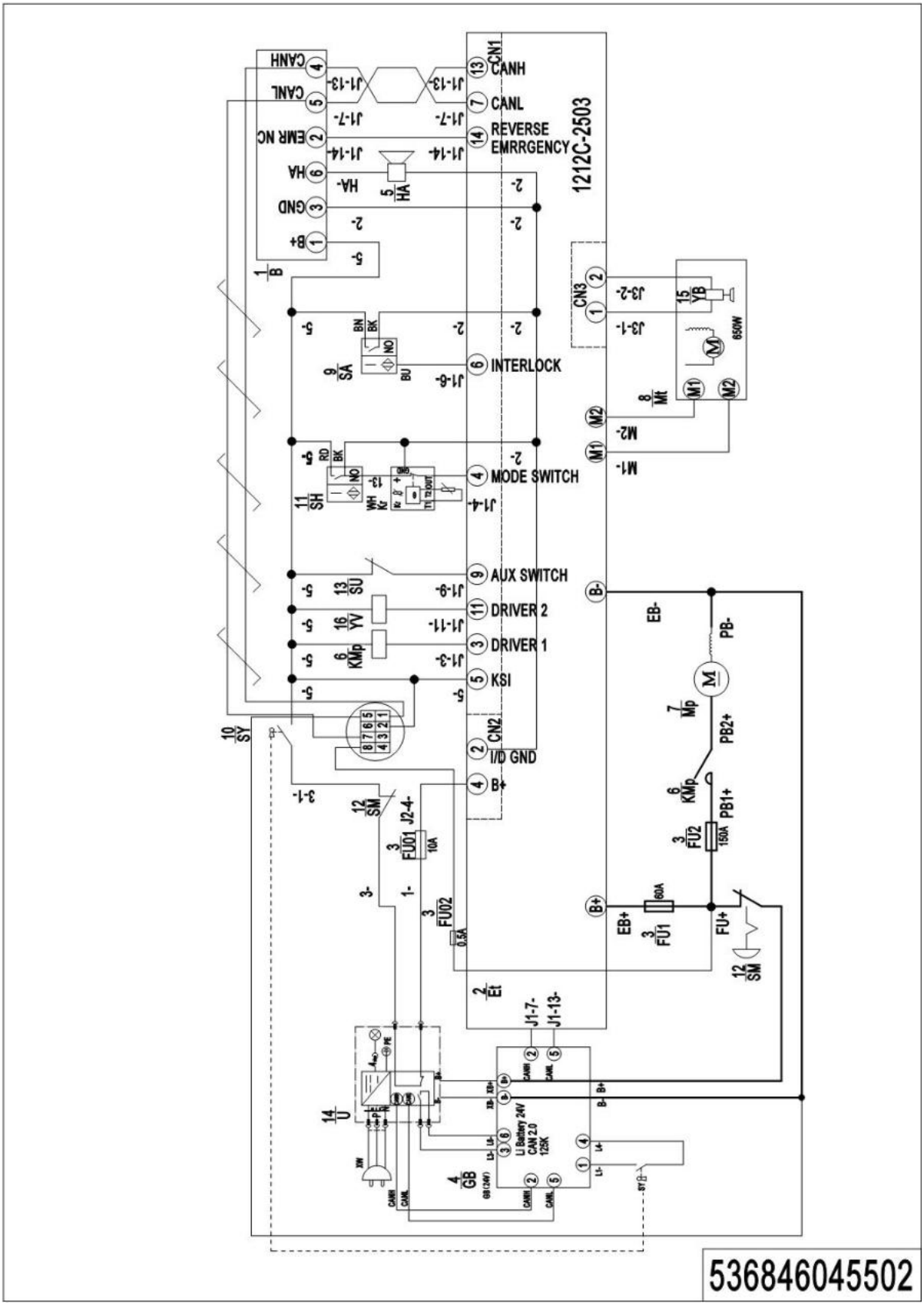

03 Hydraulic Circuit Diagram（537046045504）

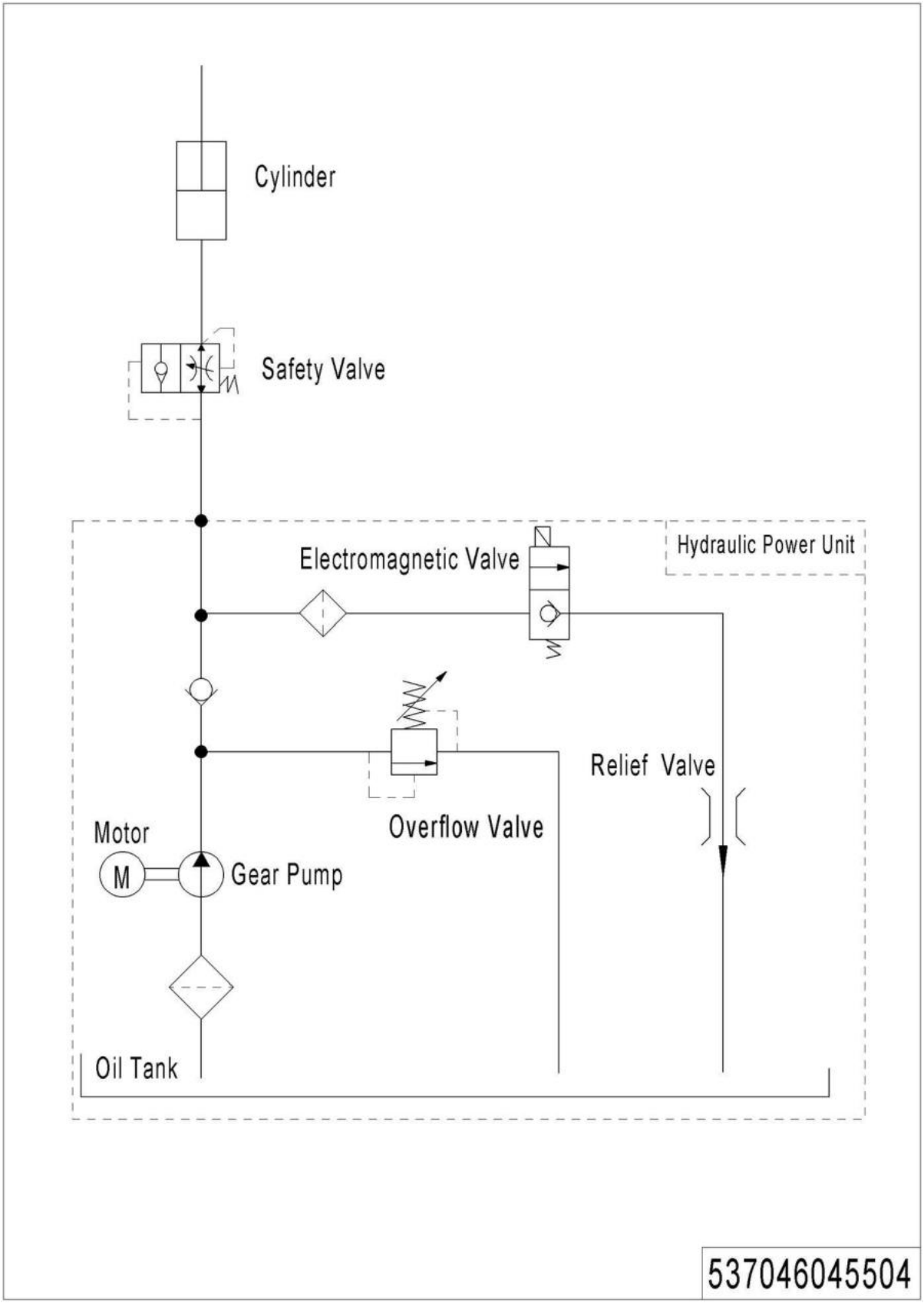

04 Consumable Parts List

No.	Item Code	Item Description	Qty.	Chapter/ Section/ Number
1	537098510015	Carbon Brush	1	Chapter 1/02/1.01
2	910700200053	Bearing	1	Chapter 1/02/3
3	961000700008	Tyre	1	Chapter 1/02/4
4	532298510026	Carbon Brush	1	Chapter 2/02/1.01
5	532698510001	Seal Kit	2	Chapter 3/02/23.01 Chapter 3/03/32.01
6	910700200020	Bearing	2	Chapter 3/04/21
7	532211020003	Gas Spring	1	Chapter 4/01/9.03
8	910700200019	Bearing	10	Chapter 4/03/2.01 Chapter 4/04/10.02
9	940300300005	WheelΦ80x70	4	Chapter 4/03/2.02
10	910700700011	Bearing	1	Chapter 4/04/8
11	940300300030	WheelΦ100x50	1	Chapter 4/04/10.01
12	910700600001	Bearing	1	Chapter 4/04/15
13	920100100007	Fuse	1	Chapter 5/03/14.02
14	920100100003	Fuse	1	Chapter 5/03/14.03
15	920100200002	Fuse	1	Chapter 5/03/14.04