Print Number: Print Date:

NOBLELIFT

Scan QR Code for More

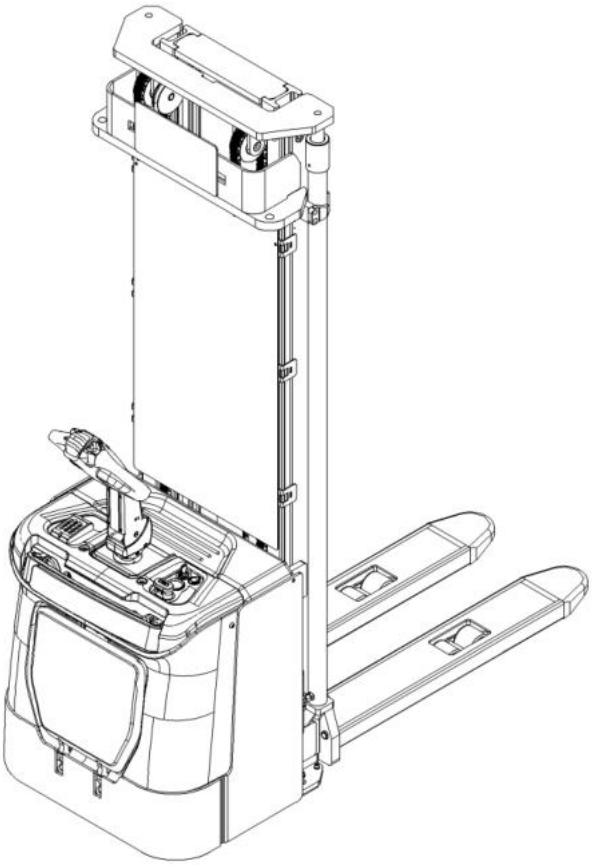

Electric Pallet Stacker
PS20N

PARTS MANUAL

536246020101

Version V04

Truck Identification Number From:

Parts Manual

PS20N-PM04EN

Please order parts from authorized dealers of Noblelift Intelligent Equipment Co., LTD.

In order to avoid wrong delivery, all the orders for spare parts should specify the following items:

- Truck model, identification number and manufacture year.
- Orders for spare parts of mast, hydraulic transmission unit, steering axle, motor, etc. shall indicate the manufacture number of these parts.
- Codes for Noblelift spare parts are shown in the table of parts manual. Please also pay attention to the description of supply status, order quantity, etc. (check the number listed in "Mark" column of the parts manual).

"Mark" Column:

The unmarked indicates the parts are in short supply cycle.

Number 1: supply as package. Indicating these that parts are small parts and seal parts, which are supplied in package unit and in short supply cycle.

Number 2: supply with constraints. Indicating that these spare parts are not in stock and will be prepared for production after receiving the order from customers, which are in long supply cycle.

Number 3: phasing-out supply. Indicating that these parts will be replaced by new parts due to technical improvements and the current stock will not be available when these parts run out. Please check the description of technical improvements notice.

Number 4: supply as assembly. Indicating that these parts are assembly parts defined by manufacture process, which cannot be supplied as a single part.

Number 5: check other tables.

This parts manual is the property of Noblelift and can be shared under the confidential agreement only, Noblelift has the right to claim for compensation of any unauthorized use. Copy without permission is not allowed. Figures in the manual are not limited by the original design. Noblelift Intelligent Equipment Co., LTD reserves the right to improve the products for continuous technology progress.

Table of Contents

Chapter 1: Drive System 5
01 Power steering Drive Unit (535946013503) 5
02 Power steering Drive Unit (EN1175-2020)(535946013506) 7
02 Power steering Drive Unit (EN1175-2020)(535946013506) Continuation 9
03 Drive and Steering Unit 1.4kW (535946013504) 11
Chapter 2: Hydraulic System 13
01 Hydraulic Pipeline (536246024001) 13
02 Pump Unit (HPI,3.2KW) (534746023501) 15
03 Pump Unit (VIBO,3.0KW) (535946023501) 17
04 Pump Unit (VIBO,3.2KW) (534746023502) 19
Chapter 3: Truck Frame 21
01 Chassis (536246021501) 21
02 Chassis (Sideways Exchange) (536246021502) 23
02 Chassis (Sideways Exchange) (536246021502) Continuation 25
03 Protective Arm (535946017501) 27
04 Platform (535946018001) 29
05 Platform (EPS,EN1175-2020) (535946018002) 31
06 Fork Carriage (535046038001) 33
Chapter 4: Mast System 35
01 Two-stage Mast Standard Lift (536246044001) 35
01 Two-stage Mast Standard Lift (536246044001) Continuation 37
02 Two-stage mast full free lift (536246043501) 39
02 Two-stage mast full free lift (536246043501) Continuation 1 41
02 Two-stage mast full free lift (536246043501) Continuation 2 43
03 Triple Mast Standard Lift (536246045001) 45
03 Triple Mast Standard Lift (536246045001) Continuation 47
04 Triple Mast Full Free Lift (536246044501) 49
04 Triple Mast Full Free Lift (536246044501) Continuation 1 51
04 Triple Mast Full Free Lift (536246044501) Continuation 2 53
Chapter 5: Steering System, Braking System, Wheels 55
01 Tiller Unit (535946011001) 55
02 Control Handle (535946011002) 57
03 Control Handle (EN1175-2020)(535946011010) 59
04 Load Wheel (532946017001) 61
05 Caster (534746016501) 63
Chapter 6: Electrical Parts 65
01 Display Assembly (535946010001) 65
02 Display Assembly(EN1175-2020) (535946010003) 67
03 Wire Harness (Power Steering) (535946033002) 69
04 Wire Harness (Power Steering,EN1175-2020) (535946033012) 71
05 Electronic Components (Power Steering) (535946033004) 73
06 Electronic Components (EPS,EN1175-2020)(535946033014) 75

07 Charger (532646036501) 77
08 Charger(Li) (536246036502) 79
09 Traction Battery (536246037001) 81
10 Li Battery (536246037002) 83
Chapter 7: Special Parts 85
01 Load Backrest (532646040501) 85
Chapter 8: Others 87
01 Label and Decal (EU) (536246047001) 87
Appendix 89
01 Electrical Circuit Diagram 89
02 Electrical Circuit Diagram(EN1175-2020) 90
03 Hydraulic Circuit Diagram 91
04 Consumable Parts List 92

Chapter 1: Drive System

01 Power steering Drive Unit (535946013503)

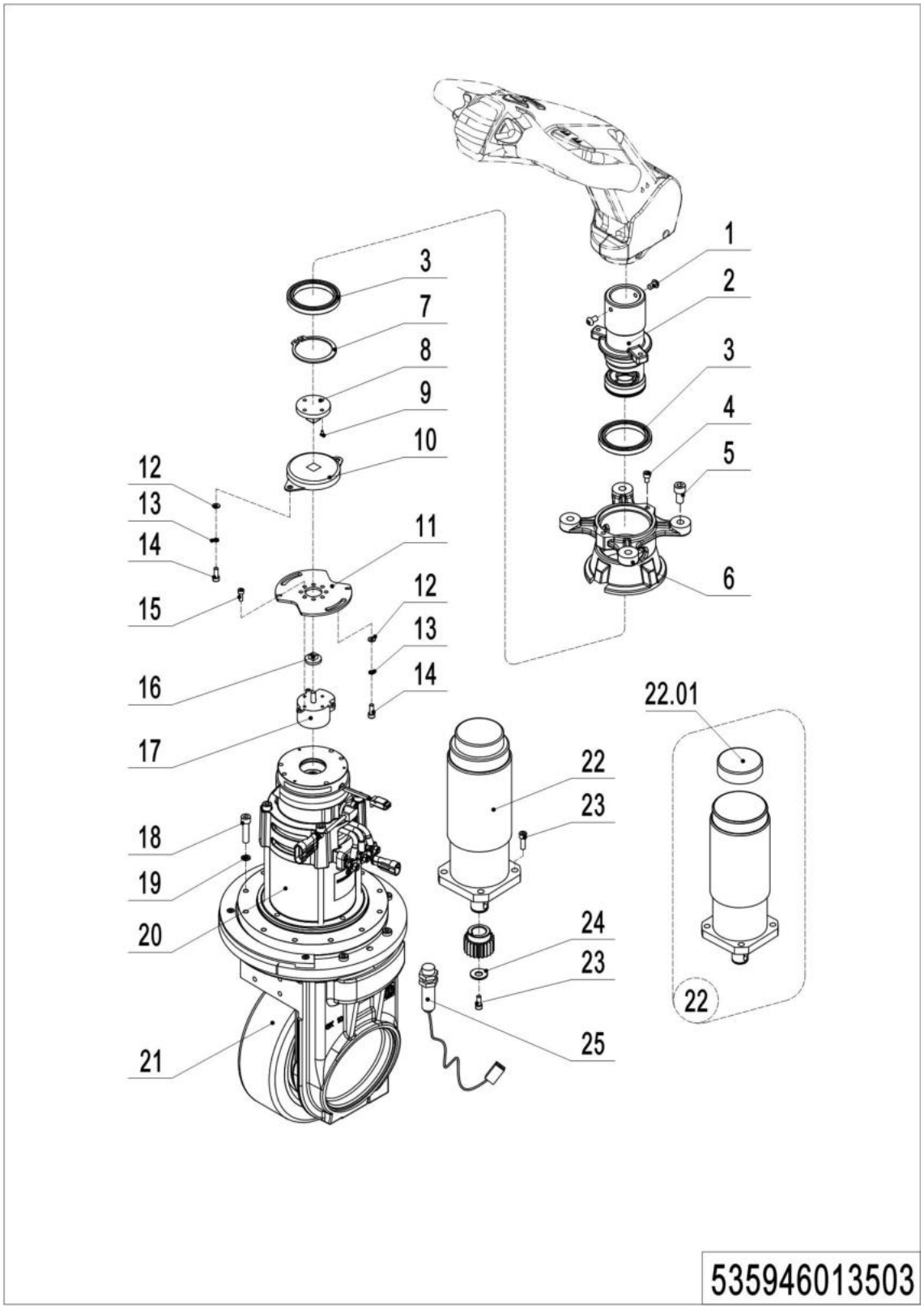

01 Power steering Drive Unit (535946013503)

No.	Item Code	Mark	Item Description	Qty.	Substitute	Note
1	910200300016	1	Screw	2		
2	535931520001	2	Bracket	1		
3	910700200041		Bearing	2		
4	910200200032	1	Screw	3		
5	910200200075	1	Screw	4		
6	505631520002		Fixing Base	1		
7	910401300024	1	Circlip	1		
8	505631520005		Link Block	1		
9	910200200014	1	Screw	1		
10	940801200001		Rotary Damper	1		
11	535931520002		Mounting Plate	1		
12	910400100004	1	Flat Washer	4		
13	910400500004	1	Spring Washer	4		
14	910200200021	1	Screw	4		
15	910200200014	1	Screw	4		
16	505931520002		Link Block	1		
17	921800200008		Potentiometer	1		
18	910200200060	1	Screw	10		
19	910400500006	1	Spring Washer	10		
20	940900500008	5	Steering Unit	1		**See 535946013504**
21	940300400005		WheelΦ230x70	1		
22	920900100069		Motor	1		
22.01	921800200016		Encoder	1		
23	910200200057	1	Screw	5		
24	506713520001		Retaining Ring	1		
25	505733510001		Proximity Switch	1		

1= Supply as package. 2= Supply with constraints. 3= Phasing-out supply. 4= Supply as assembly. 5= Check other tables.

02 Power steering Drive Unit (EN1175-2020)(535946013506)

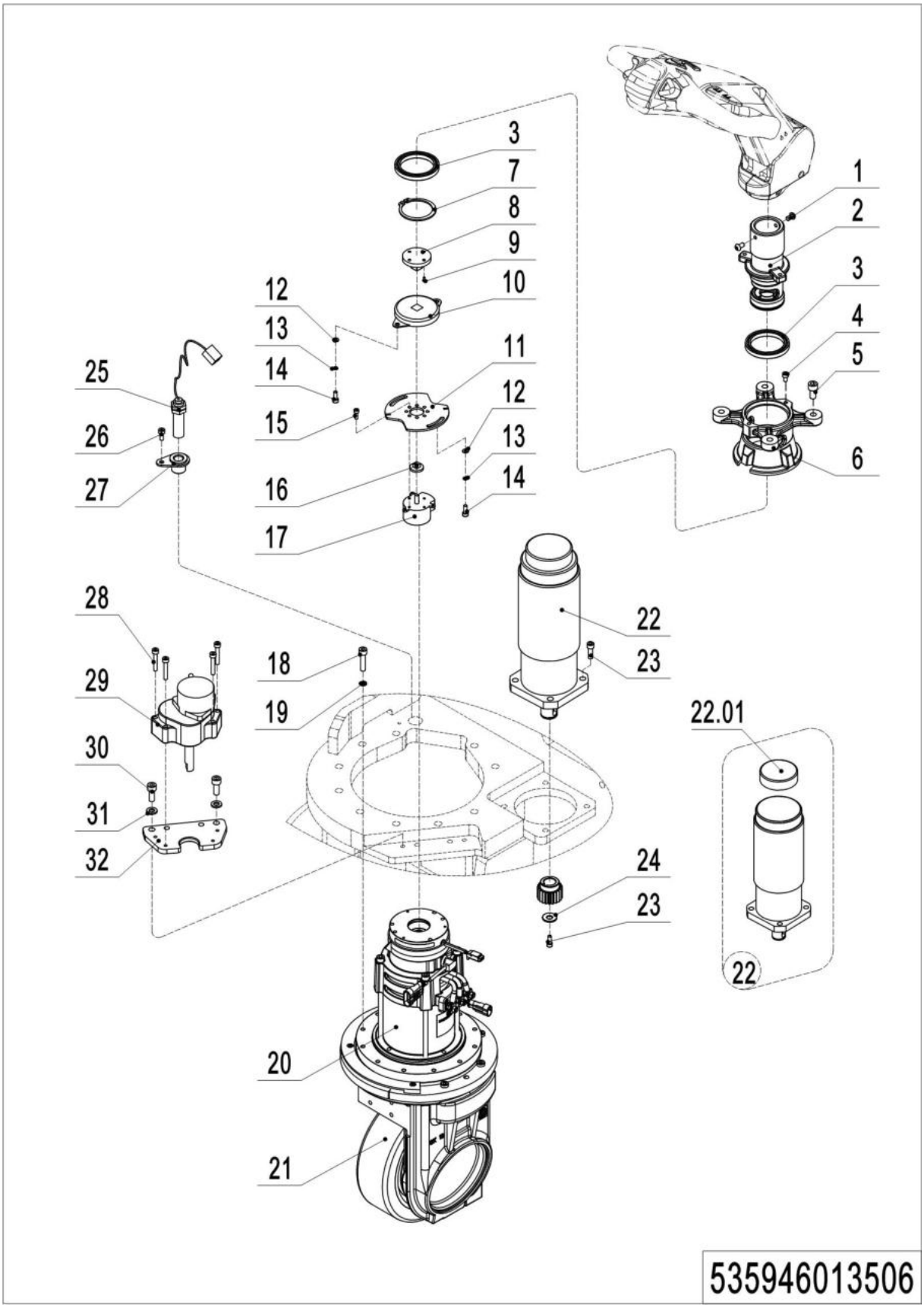

1= Supply as package. 2= Supply with constraints. 3= Phasing-out supply. 4= Supply as assembly. 5= Check other tables.

02 Power steering Drive Unit(EN1175-2020)(535946013506)

No.	Item Code	Mark	Item Description	Qty.	Substitute	Note
1	910200300016	1	Screw	2		
2	535931520001	2	Bracket	1		
3	910700200041		Bearing	2		
4	910200200032	1	Screw	3		
5	910200200075	1	Screw	4		
6	505631520002		Fixing Base	1		
7	910401300024	1	Circlip	1		
8	505631520005		Link Block	1		
9	910200200014	1	Screw	1		
10	940801200005		Rotary Damper	1		
11	535931520002		Mounting Plate	1		
12	910400100004	1	Flat Washer	4		
13	910400500004	1	Spring Washer	4		
14	910200200021	1	Screw	4		
15	910200200014	1	Screw	4		
16	505931520002		Link Block	1		
17	921800100037		Potentiometer	1		
18	910200200060	1	Screw	10		
19	910400500006	1	Spring Washer	10		
20	940900500008	5	Steering Unit	1		**See 535946013504**
21	940300400005		WheelΦ230x70	1		
22	920900100069		Motor	1		
22.01	921800200016		Encoder	1		
23	910200200057	1	Screw	5		
24	506713520001		Retaining Ring	1		
25	562633510001		Proximity Switch	1		
26	910200200013		Screw	1		
27	533213510005		Bushing	1		
28	910200200017		Screw	4		
29	921800100059		Sensor	1		

1= Supply as package. 2= Supply with constraints. 3= Phasing-out supply. 4= Supply as assembly. 5= Check other tables.

02 Power steering Drive Unit (EN1175-2020)(535946013506) Continuation

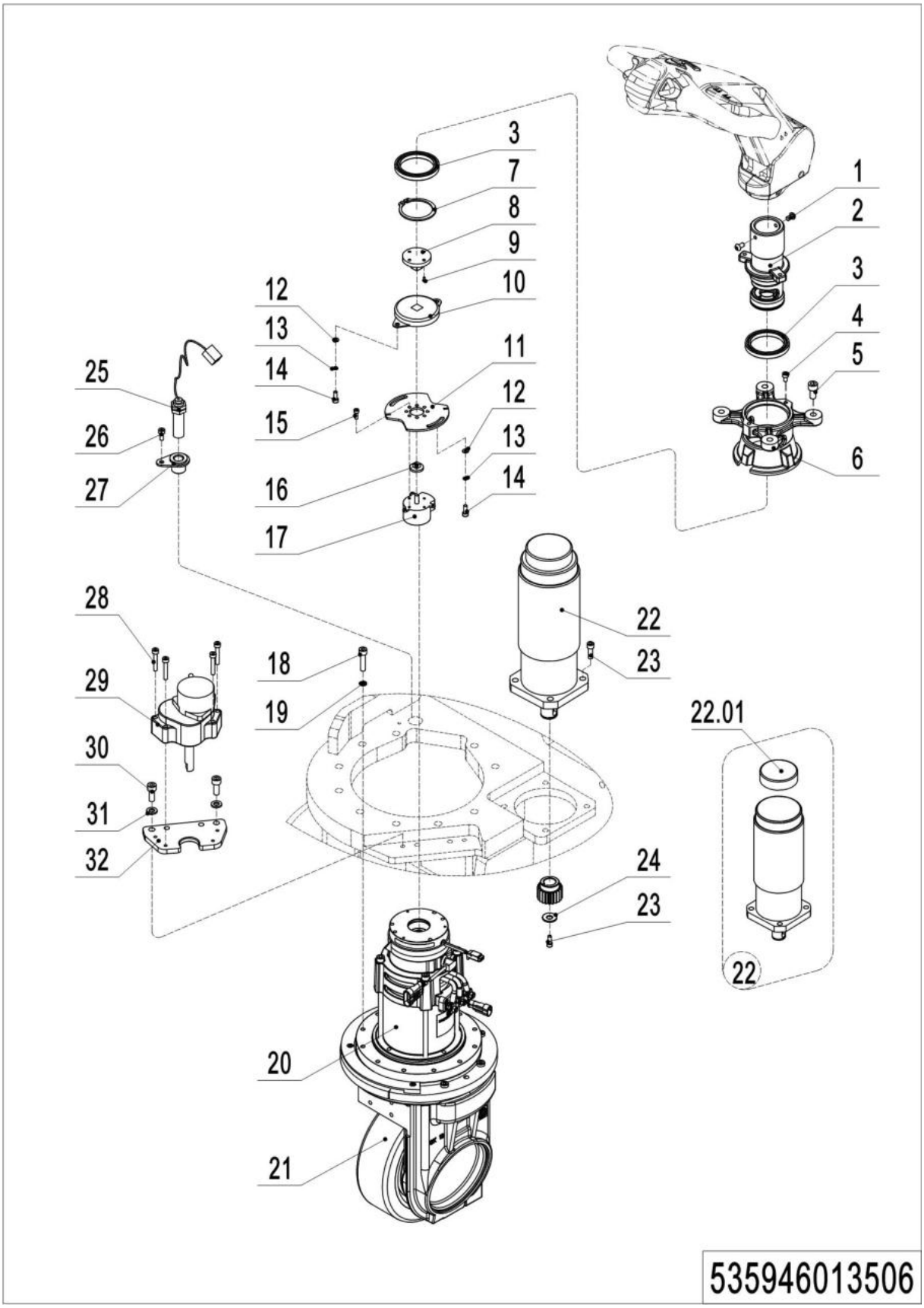

02 Power steering Drive Unit(EN1175-2020)(535946013506) Continuation

No.	Item Code	Mark	Item Description	Qty.	Substitute	Note
30	910200200035		Screw	2		
31	910400100005		Flat Washer	2		
32	537813520019		Mounting Plate	1		

03 Drive and Steering Unit 1.4kW (535946013504)

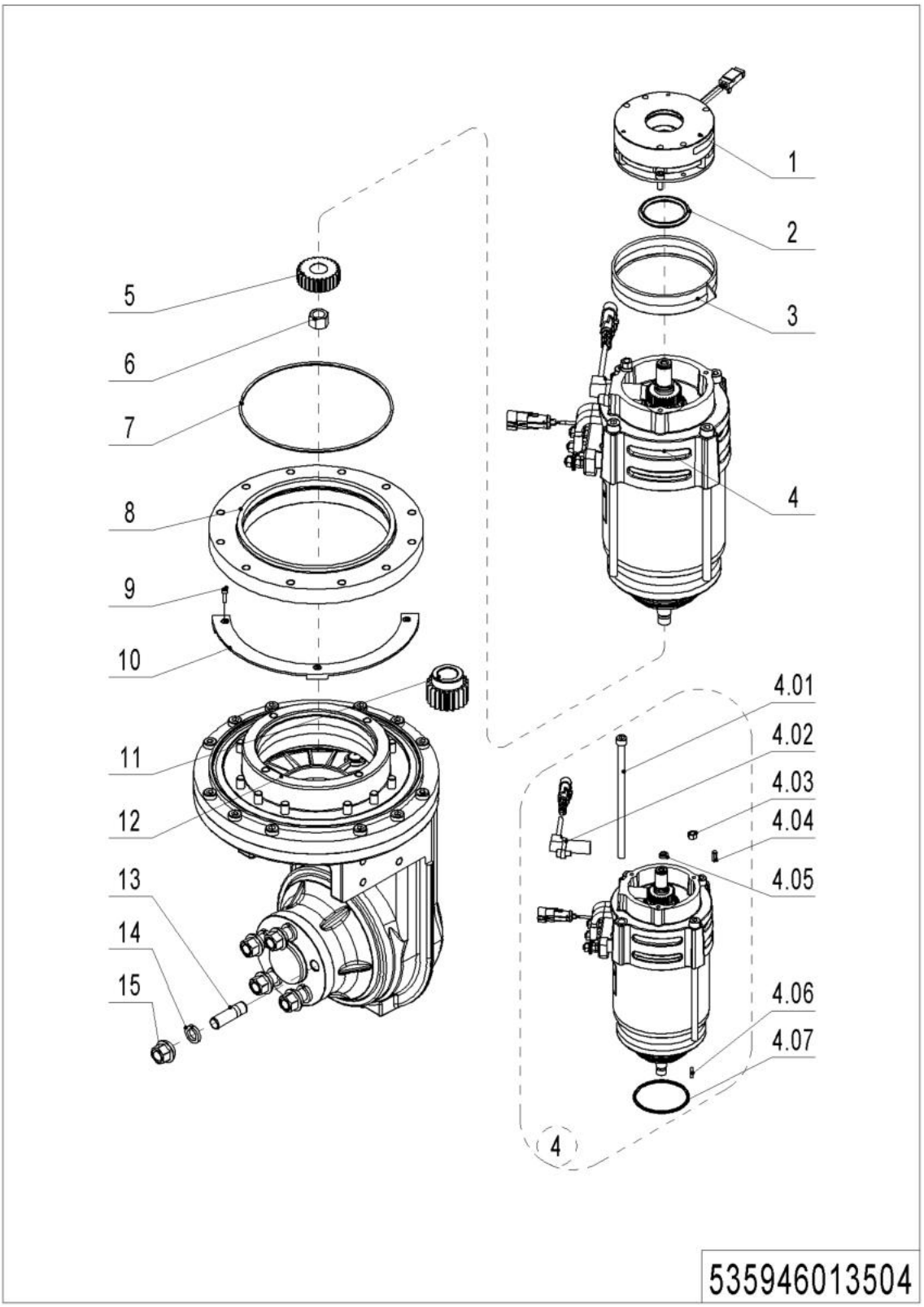

03 Drive and Steering Unit 1.4kW (535946013504)

No.	Item Code	Mark	Item Description	Qty.	Substitute	Note
1	535998510001		Brake	1		
2	535998520000		Locating Ring	1		
3	535998520001		Division Plate	1		
4	535998510003		Motor	1		
4.01	535998520002		Screw	4		
4.02	535998510002		Sensor	1		
4.03	535998520003		Nut	1		
4.04	535998520005		Feather Key	1		
4.05	535998520004		Safety Element	1		
4.06	535998520006		Key	1		
4.07	535998520007		O-Ring	1		
5	535998520014		Gear	1		
6	535998520008		Nut	1		
7	535998520009		O-Ring	1		
8	535998520010		Plate	1		
9	535998520015		Screw	3		
10	535998520016		Limiter	1		
11	535998520017		Gear	1		
12	535998510005		Gearbox Assembly	1		
13	535998520011		Bolt	5		
14	535998520012		Washer	5		
15	535998520013		Nut	5		

1= Supply as package. 2= Supply with constraints. 3= Phasing-out supply. 4= Supply as assembly. 5= Check other tables.

Chapter 2: Hydraulic System

01 Hydraulic Pipeline (536246024001)

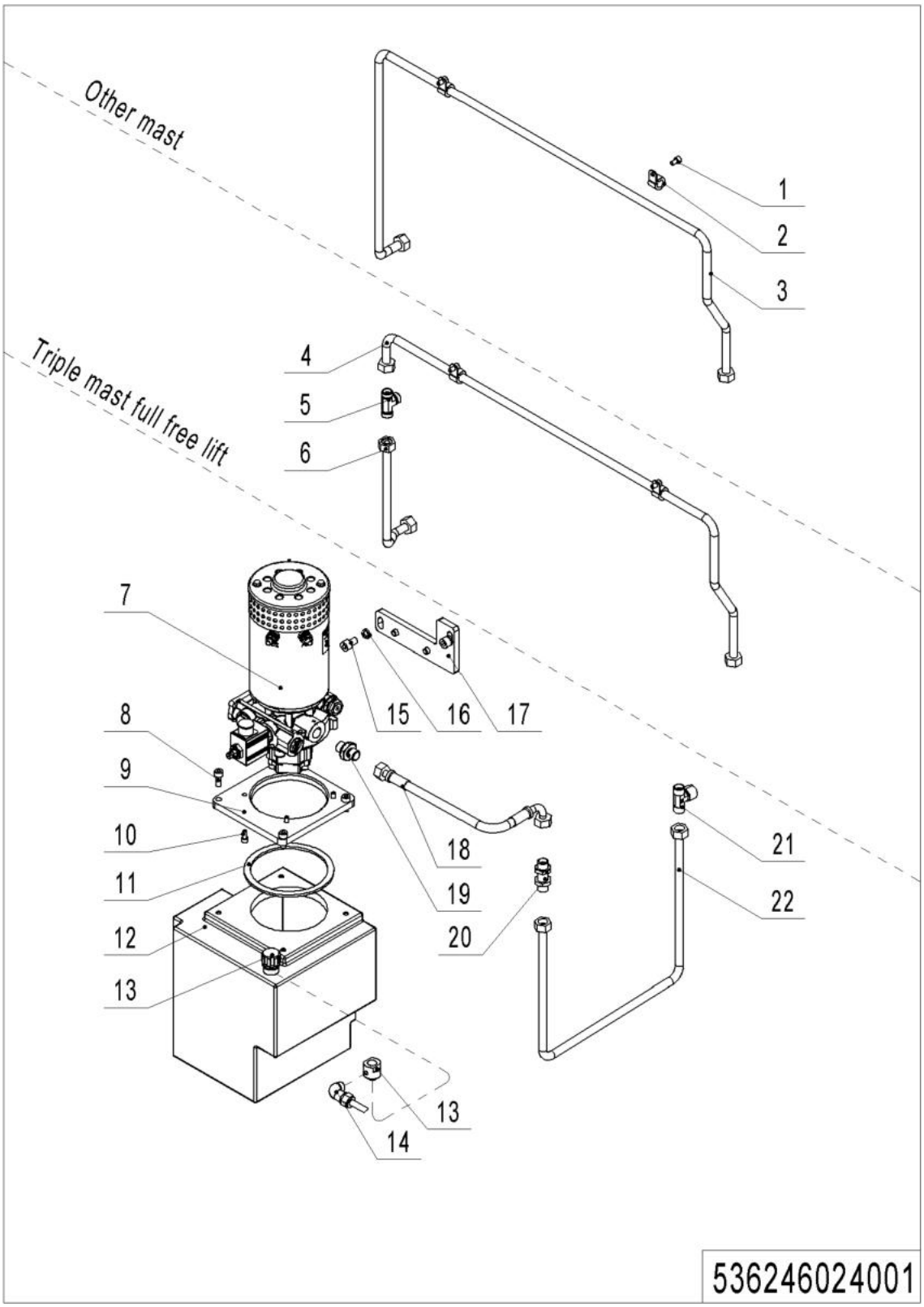

01 Hydraulic Pipeline (536246024001)

No.	Item Code	Mark	Item Description	Qty.	Substitute	Note
1	910200200032	1	Screw	2		
2	951000100001		Hose Clamp	2		
3	536224010003		Steel Tube	1		
4	536224010002		Steel Tube	1		
5	950400700002		Joint	1		
6	533545020026		Steel Tube	1		
7	950900100015	5	Pump Unit	1		**See 534746023501**
7	950900100062	5	Pump Unit	1		**See535946023501**
7	950900100062	5	Pump Unit	1		**See535946023502**
8	910200200057	1	Screw	4		
9	535919020005		Mounting Plate	1		
10	910200200034	1	Screw	4		
11	535919020003		Sealing Gasket	1		
12	535919020001		Tank	1		
12	535919020004		Tank	1		EPS,EN1175-2020
13	951100200001		Screw Plug	1		
13	532624020015		Adapter	1		**TX**
14	950500100001		Joint	3		**TX**
15	910200200074		Screw	4		
16	910400500007		Spring Washer	4		
17	535924020001		Mounting Plate	1		
18	201027520002		Hose	1		
19	950400300005		Joint	1		
20	950400500001		Joint	1		
21	950400900002		Joint	1		
22	536224010001		Steel Tube	1		

1= Supply as package. 2= Supply with constraints. 3= Phasing-out supply. 4= Supply as assembly. 5= Check other tables.

02 Pump Unit (HPI,3.2KW) (534746023501)

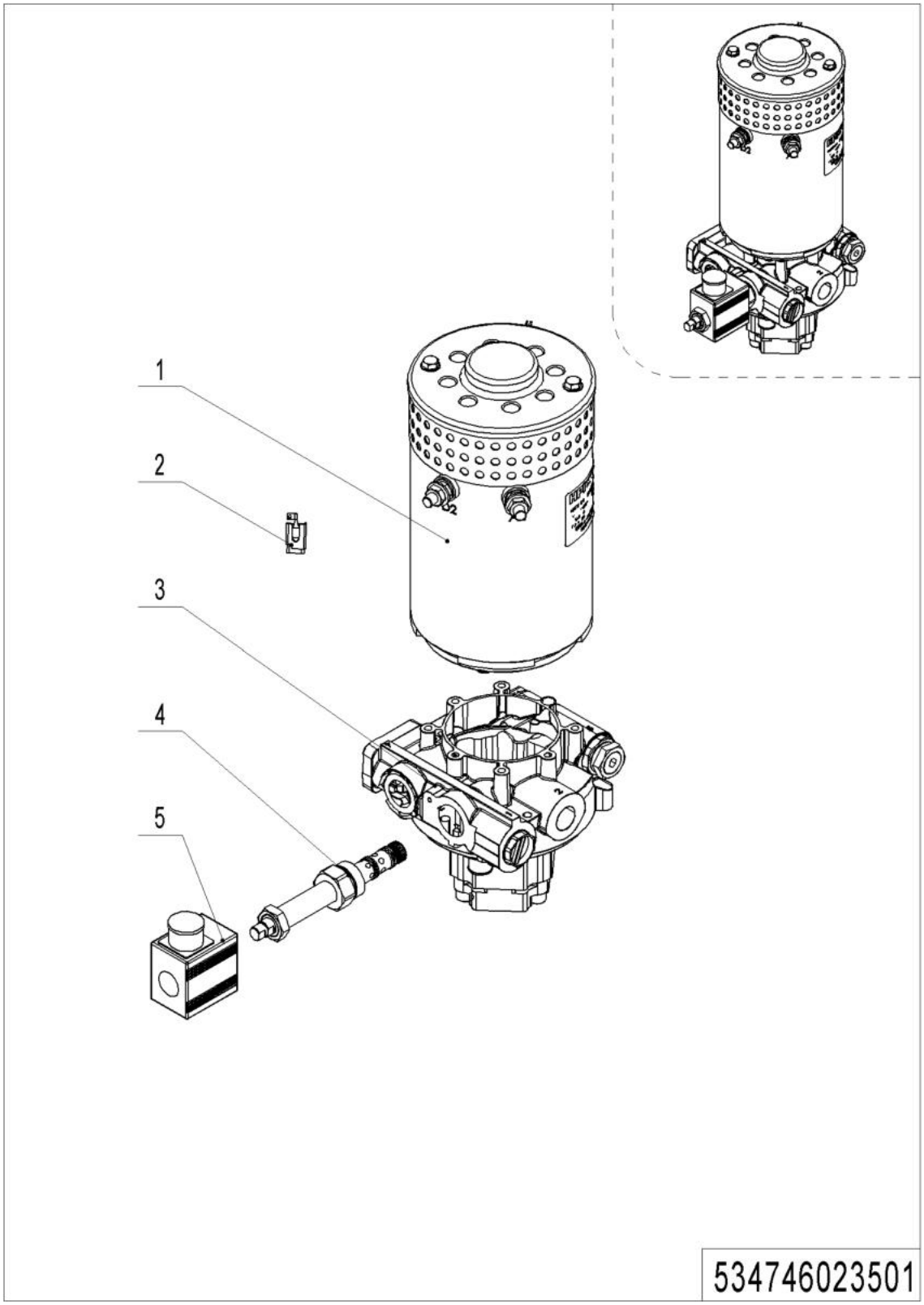

1= Supply as package. 2= Supply with constraints. 3= Phasing-out supply. 4= Supply as assembly. 5= Check other tables.

02 Pump Unit (HPI,3.2KW) (534746023501)

No.	Item Code	Mark	Item Description	Qty.	Substitute	Note
--	950900100015		Pump Unit	1		**HPI,3.2KW**
1	534798510006	2	Motor	1		
2	534798520026	2	Carbon Brush	1		
3	534798510007	2	Valve Block	1		
4	534798520024	2	Magnetic Valve	1		**Provide with coil**
5	534798520025	2	Coil	1		**Provide with valve**

03 Pump Unit (VIBO,3.0KW) (535946023501)

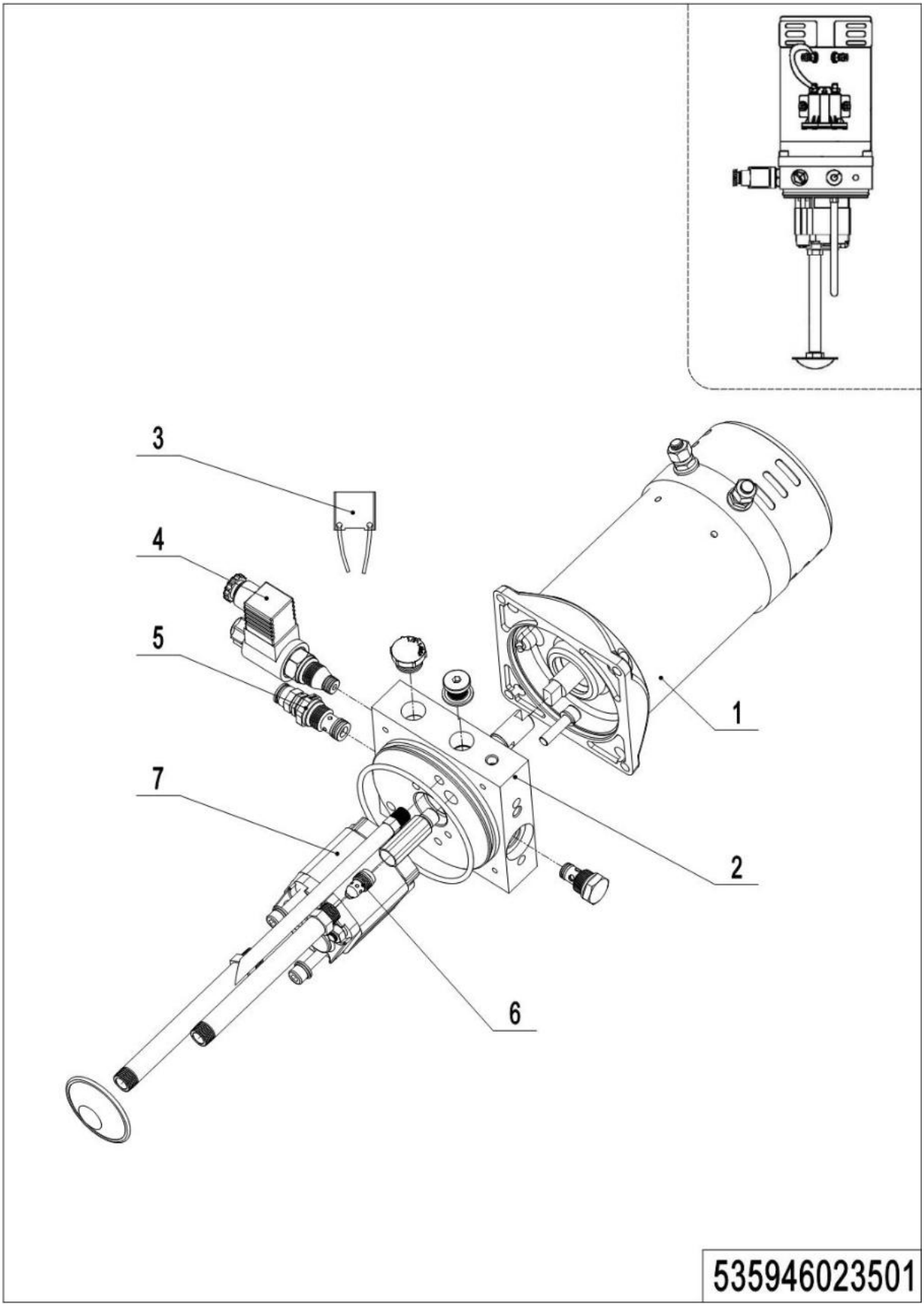

1= Supply as package. 2= Supply with constraints. 3= Phasing-out supply. 4= Supply as assembly. 5= Check other tables.

03 Pump Unit (VIBO,3.0KW) (535946023501)

No.	Item Code	Mark	Item Description	Qty.	Substitute	Note
--	950900100062	5	Pump Unite	1		VIBO,3.0KW
1	535998510008		Motor	1		
2	535998520018		Valve Block	1		
3	535998510019		Carbon Brush	1		
4	535998510009		Magnetic Valve	1		
5	535998510011		Overflow Valve	1		
6	535998510012		Valve	1		
7	505998510013		Gear Pump	1		

04 Pump Unit (VIBO,3.2KW) (534746023502)

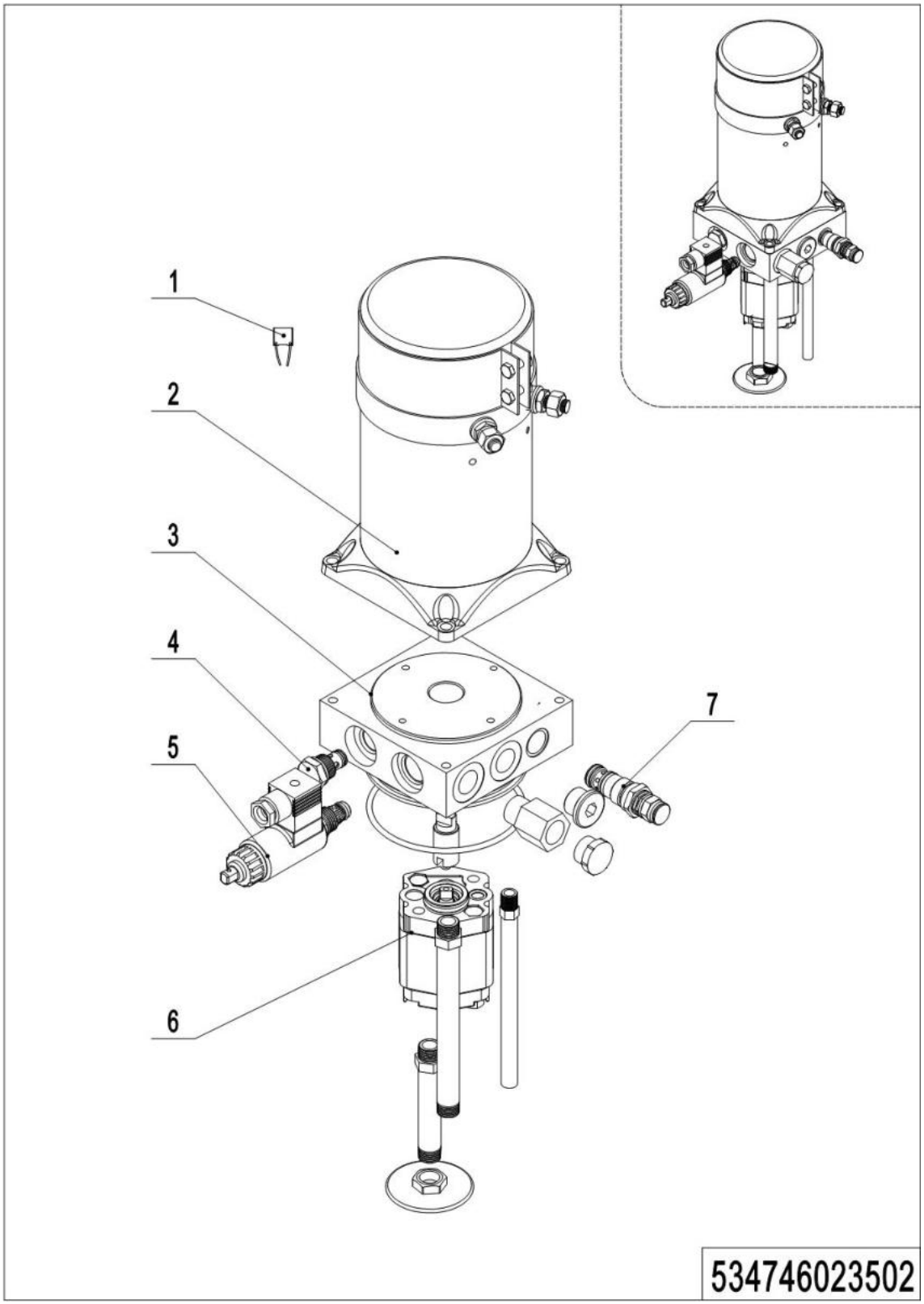

1= Supply as package. 2= Supply with constraints. 3= Phasing-out supply. 4= Supply as assembly. 5= Check other tables.

04 Pump Unit (VIBO,3.2KW) (534746023502)

No.	Item Code	Mark	Item Description	Qty.	Substitute	Note
--	950900100098		Pump Unite	1		**VIBO,3.2KW**
1	535998510013	2	Carbon Brush	1		
2	534798510012	2	Motor	1		
3	534798510013	2	Valve Block	1		
4	532098510003	2	Check Valve	1		
5	534798510014	2	Magnetic Valve	1		
6	534798510015	2	Gear Pump	1		
7	402698520018	2	Overflow Valve	1		

Chapter 3: Truck Frame

01 Chassis (536246021501)

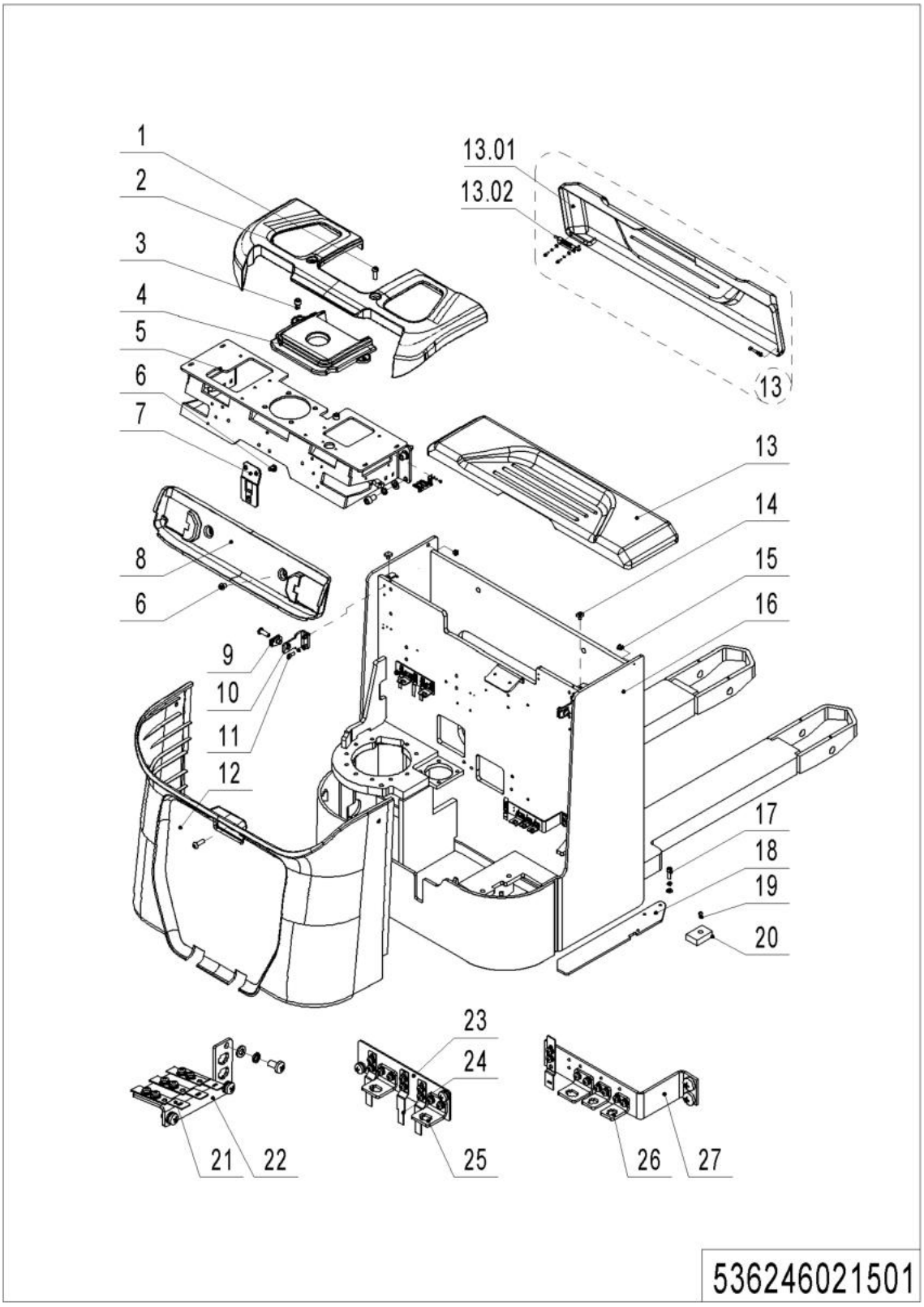

01 Chassis (536246021501)

No.	Item Code	Mark	Item Description	Qty.	Substitute	Note
1	941100100004	1	Screw	5		
2	535921520040		Protective Cover	1		
3	910200200074	1	Screw	2		
4	535921520042		Protective Cover	1		
5	535917510000		Mounting Base	1		
6	941100100005	1	Screw	4		
7	535921520032		Mounting Plate	1		
8	535921520041		Protective Cover	1		
9	940400400003		Cage Nut	3		
10	535921520031		Mounting Plate	2		
11	910200200035	1	Screw	8		
12	535921520039		Protective Cover	1		
13	536298510000		Cell Cover Assembly	1		
13.01	536221010001		Cell Cover	1		
13.02	940800900001		Lock Pin	1		
14	505938520016		Crash Pad	2		
15	534721520023		Sleeve	2		
16	536221510000	2	Chassis(Power steering，570)	1		
16	536221510001	2	Chassis(Power steering，685)	1		
17	910200200058	1	Screw	3		
18	535921520030		Guard Plate	1		
19	910200300017		Screw	2		
20	534721520024		Crash Pad	2		
21	921300300005		Holder	5		
22	535921520028		Mounting Plate	1		
23	535921520027		Mounting Plate	1		
24	921300300010		Connector Holder	3		
25	921300300003		Holder	3		
26	921300300002		Holder	2		
27	535921520026		Mounting Plate	1		

02 Chassis (Sideways Exchange) (536246021502)

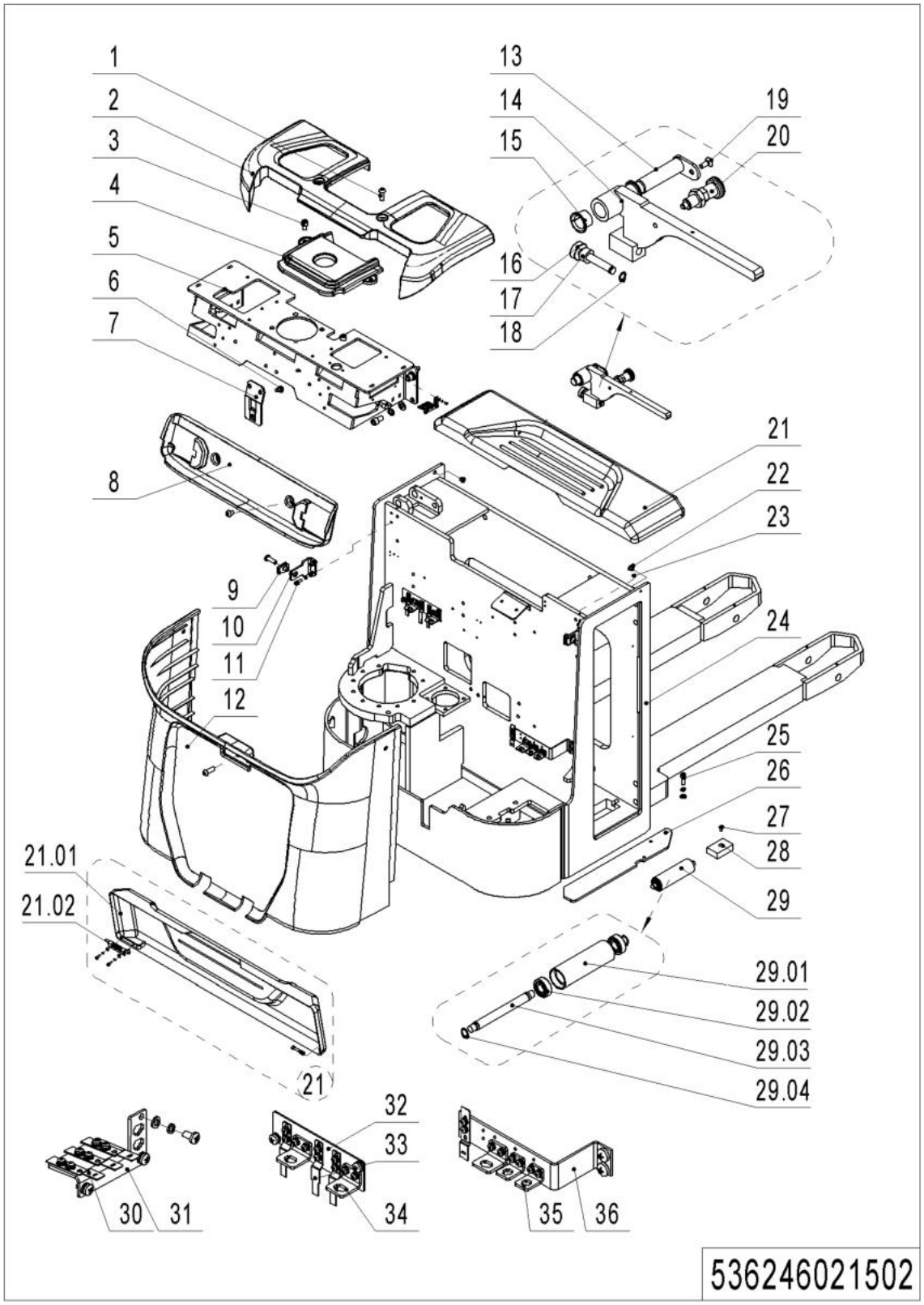

02 Chassis (Sideways Exchange) (536246021502)

No.	Item Code	Mark	Item Description	Qty.	Substitute	Note
1	941100100004		Screw	5		
2	535921520040		Protective Cover	1		
3	910200200074		Screw	2		
4	535921520042		Protective Cover	1		
5	535917510000		Mounting Base	1		
6	941100100005		Screw	4		
7	535921520032		Mounting Plate	1		
8	535921520041		Protective Cover	1		
9	940400400003		Cage Nut	3		
10	535921520031		Mounting Plate	2		
11	910200200035		Screw	8		
12	535921520039		Protective Cover	1		
13	535921510004		Pin	1		
14	535921510003		Baffle	1		
15	940500200008		Bushing	2		
16	535921520037		Pin	1		
17	535921520038		Spacer Bush	1		
18	910401300002		Circlip	1		
19	910200400017		Screw	1		
20	940800900002		Indexing Plunger	1		
21	536298510000		Cell Cover Assembly	1		
21.01	536221010001		Cell Cover	1		
21.02	940800900001		Lock Pin	1		
22	534721520023		Sleeve	1		
23	535917520012		Protective Mat	2		
24	536221510002		Chassis(Power steering，570)	1		**sideways Exchange**
24	536221510003		Chassis(Power steering，685)	1		**sideways Exchange**
25	910200200058		Screw	3		

02 Chassis (Sideways Exchange) (536246021502) Continuation

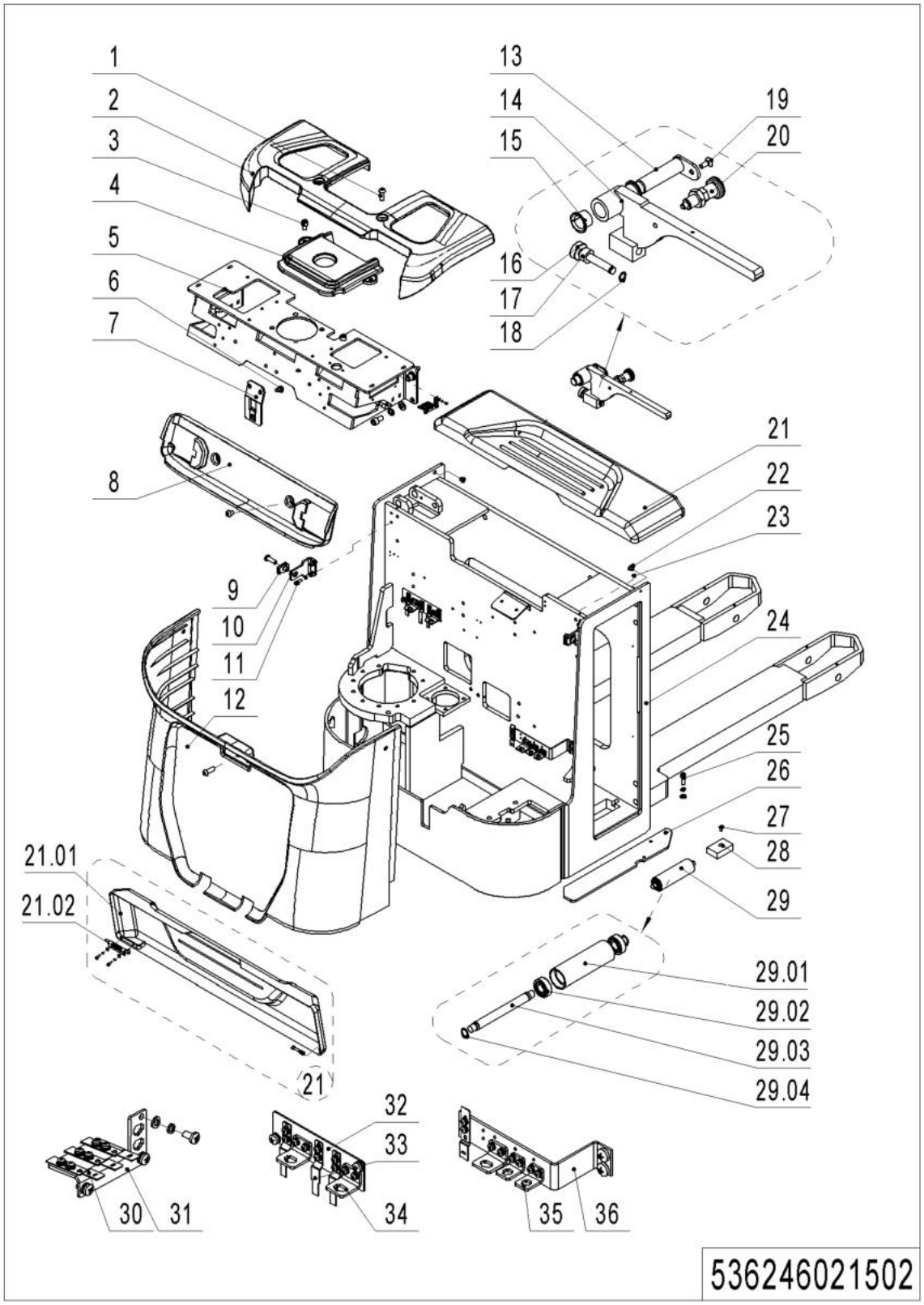

02 Chassis (Sideways Exchange) (536246021502) Continuation

No.	Item Code	Mark	Item Description	Qty.	Substitute	Note
26	535921520030		Guard Plate	1		
27	910200300017		Screw	2		
28	534721520024		Crash Pad	2		
29	534721510003		Roller	6		
29.01	534721520028		Roller	6		
29.02	910700200017		Bearing	12		
29.03	534721520029		Axle	6		
29.04	910401300006	1	Circlip	12		
30	921300300005		Holder	5		
31	535921520028		Mounting Plate	1		
32	535921520027		Mounting Plate	1		
33	921300300010		Connector Holder	3		
34	921300300003		Holder	3		
35	921300300002		Holder	2		
36	535921520026		Mounting Plate	1		

03 Protective Arm (535946017501)

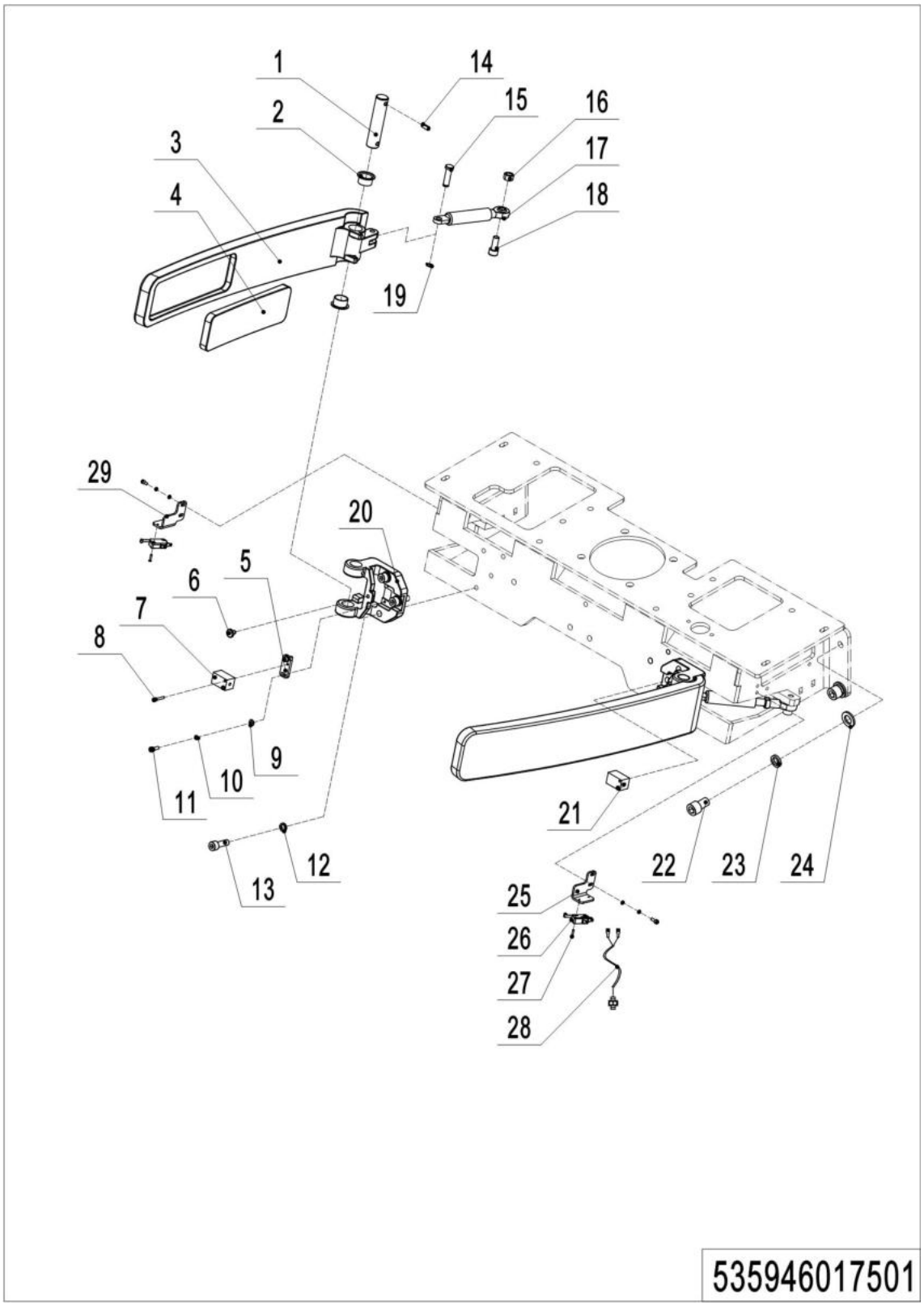

03 Protective Arm (535946017501)

No.	Item Code	Mark	Item Description	Qty.	Substitute	Note
1	535917520007		Axle	2		
2	940500200003		Bushing	2		
3	535917520008		Protective Arm	2		
4	535917520009		Protective Mat	2		
5	535917520011		Mounting Plate	2		
6	535917520012		Protective Mat	2		
7	535933510001		Proximity Switch	1		
8	910200500015	1	Screw	4		
9	910400100003	1	Flat Washer	8		
10	910400500003	1	Spring Washer	8		
11	910200200014	1	Screw	8		
12	910400500006	1	Spring Washer	6		
13	910200200058	1	Screw	6		
14	910600400025	1	Spring Pin	2		
15	535917520010		Axle	2		
16	910300100006	1	Nut	2		
17	940400100037		Air Spring	2		
18	910200200060	1	Screw	2		
19	910401300001	1	Circlip	2		
20	535917520006		Mounting Base	2		
21	535933510000		Proximity Switch	1		
22	910200200096	1	Screw	4		
23	910400500008	1	Spring Washer	4		
24	910400100008	1	Flat Washer	4		
25	535917520013		Mounting Plate	1		With safety switch
26	920200300016		Micro Switch	2		With safety switch
27	910200500014		Screw	4		With safety switch
28	506733010025		Wire Harness	2		With safety switch
29	535917520014		Mounting Plate	1		With safety switch

04 Platform (535946018001)

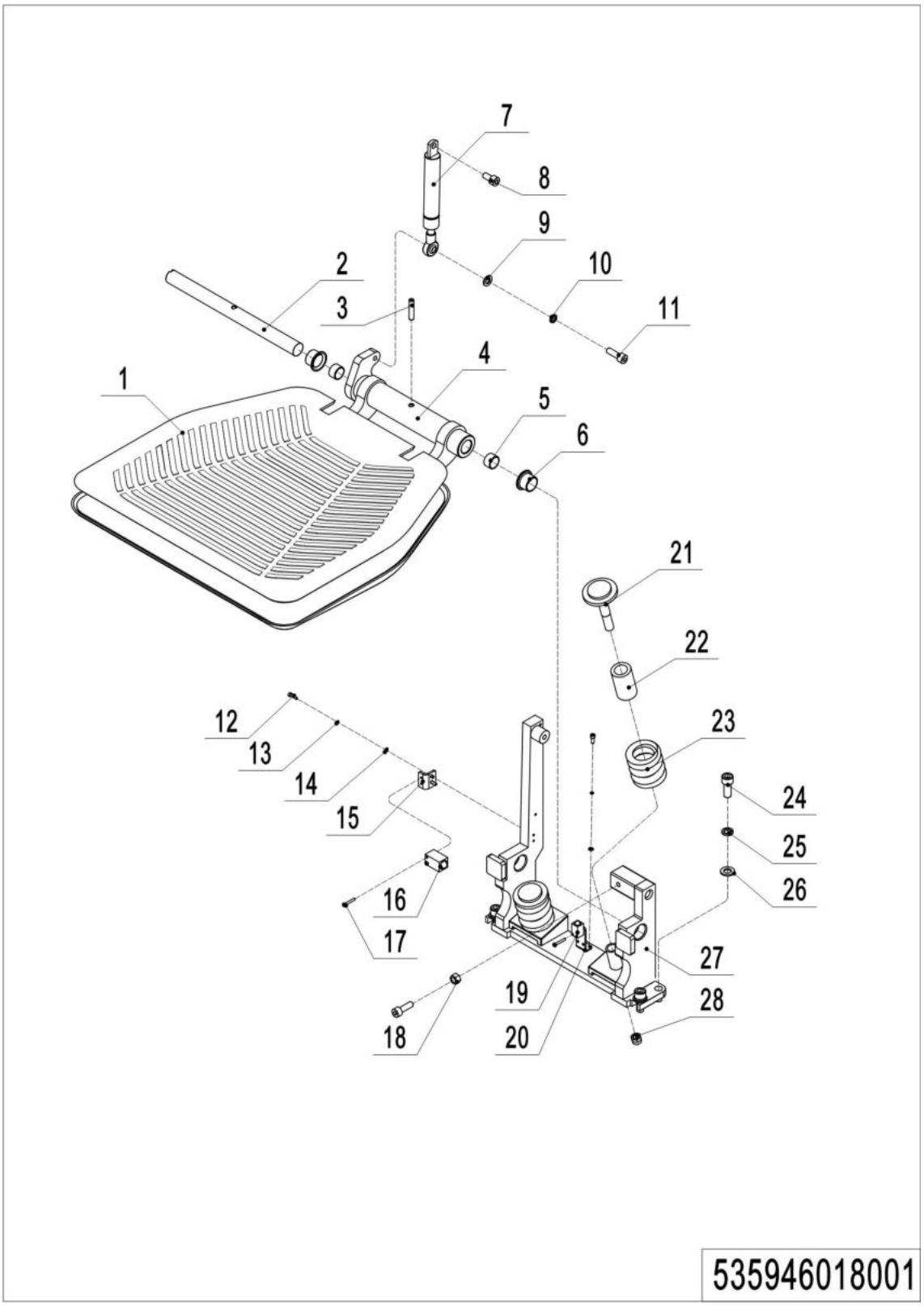

1= Supply as package. 2= Supply with constraints. 3= Phasing-out supply. 4= Supply as assembly. 5= Check other tables.

04 Platform (535946018001)

No.	Item Code	Mark	Item Description	Qty.	Substitute	Note
1	535918020019		Pedal Pad	1		
2	535918020014		Axle	1		
3	910600400040		Spring Pin	1		
4	535918010001		Platform	1		
5	940500100019		Bushing	2		
6	940500200008		Bushing	2		
7	940400100042		Air Spring	1		
7	940400100057		Air Spring	1		With safety switch
8	910200200057		Screw	1		
9	910400100006		Flat Washer	1		
10	910400500006		Spring Washer	1		
11	910200200058		Screw	2		
12	910200200014		Screw	4		
13	910400500003		Spring Washer	4		
14	910400100003		Flat Washer	4		
15	535918020015		Mounting Plate	1		
16	535933510002		Proximity Switch	1		
17	910200500015		Screw	2		
18	910300100007		Nut	1		
19	506733510005		Proximity Switch	1		With safety switch
20	535918020022		Mounting Plate	1		With safety switch
21	535918020017		Bolt	2		
22	535918020018		Cushion Collar	2		
23	535918020016		Spring	2		
24	910200200076		Screw	4		
25	910400500007		Spring Washer	4		
26	910400100007		Flat Washer	4		
27	535918010000		Mounting Base	1		
28	910300500006		Nut	2		

05 Platform (EPS,EN1175-2020) (535946018002)

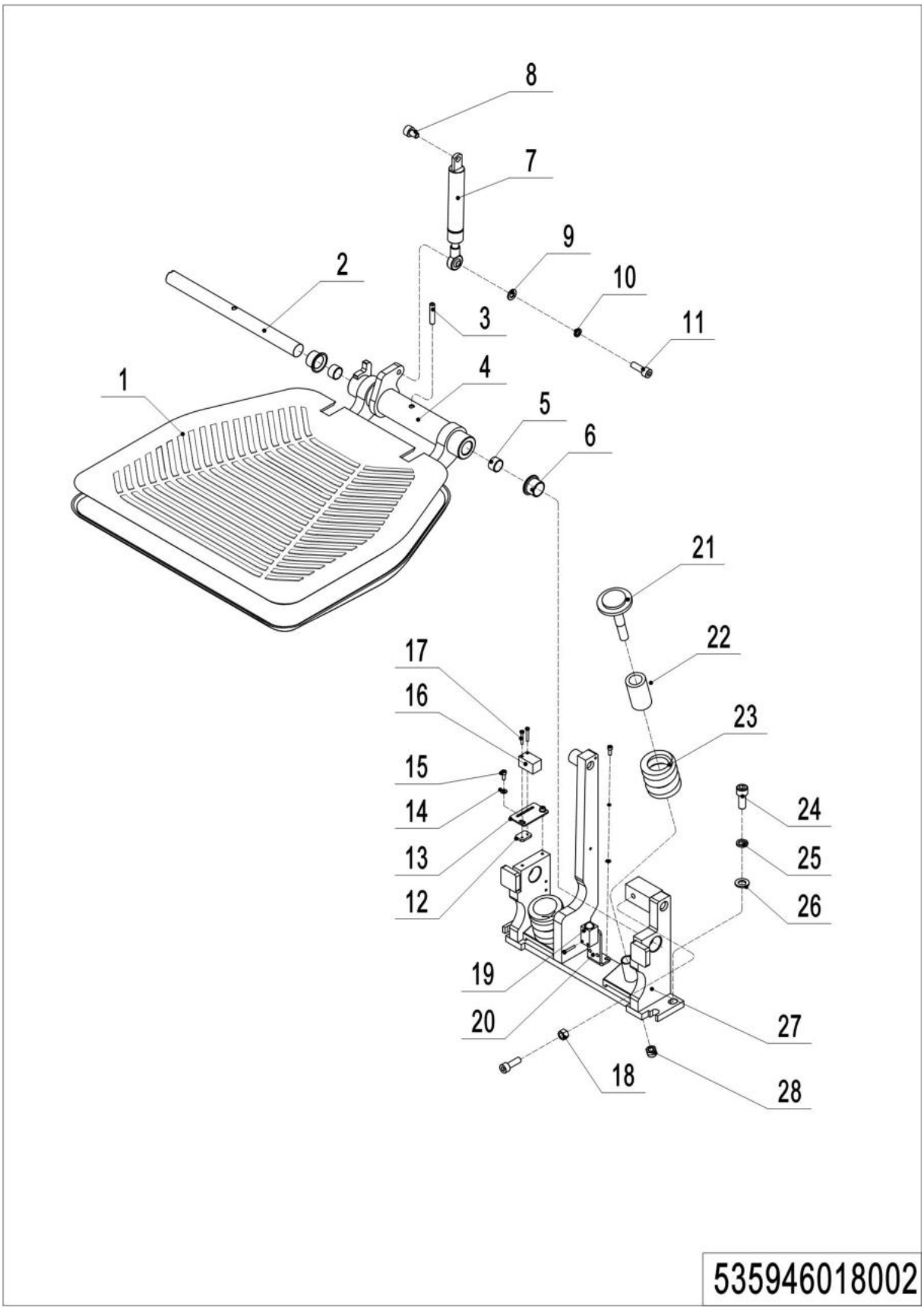

05 Platform(EPS,EN1175-2020) (535946018002)

No.	Item Code	Mark	Item Description	Qty.	Substitute	Note
1	535918020019		Pedal Pad	1		
2	535918020014		Axle	1		
3	910600400040		Spring Pin	1		
4	562618010001		Platform	1		
5	940500100019		Bushing	2		
6	940500200008		Bushing	2		
7	940400100057		Air Spring	1		
8	910200200057		Screw	1		
9	910400100006		Flat Washer	1		
10	910400500006		Spring Washer	1		
11	910200200058		Screw	2		
12	535918020027		Mounting Plate	1		
13	562618020005		Mounting Plate	1		
14	910400100003		Flat Washer	2		
15	910200200013		Screw	2		
16	535933510002		Proximity Switch	1		
17	910200500015		Screw	2		
18	910300100007		Nut	1		
19	506733510005		Proximity Switch	1		
20	535918020022		Mounting Plate	1		
21	535918020017		Bolt	2		
22	535918020018		Cushion Collar	2		
23	535918020016		Spring	2		
24	910200200076		Screw	4		
25	910400500007		Spring Washer	4		
26	910400100007		Flat Washer	4		
27	562618010000		Mounting Base	1		
28	910300500006		Nut	2		

06 Fork Carriage (535046038001)

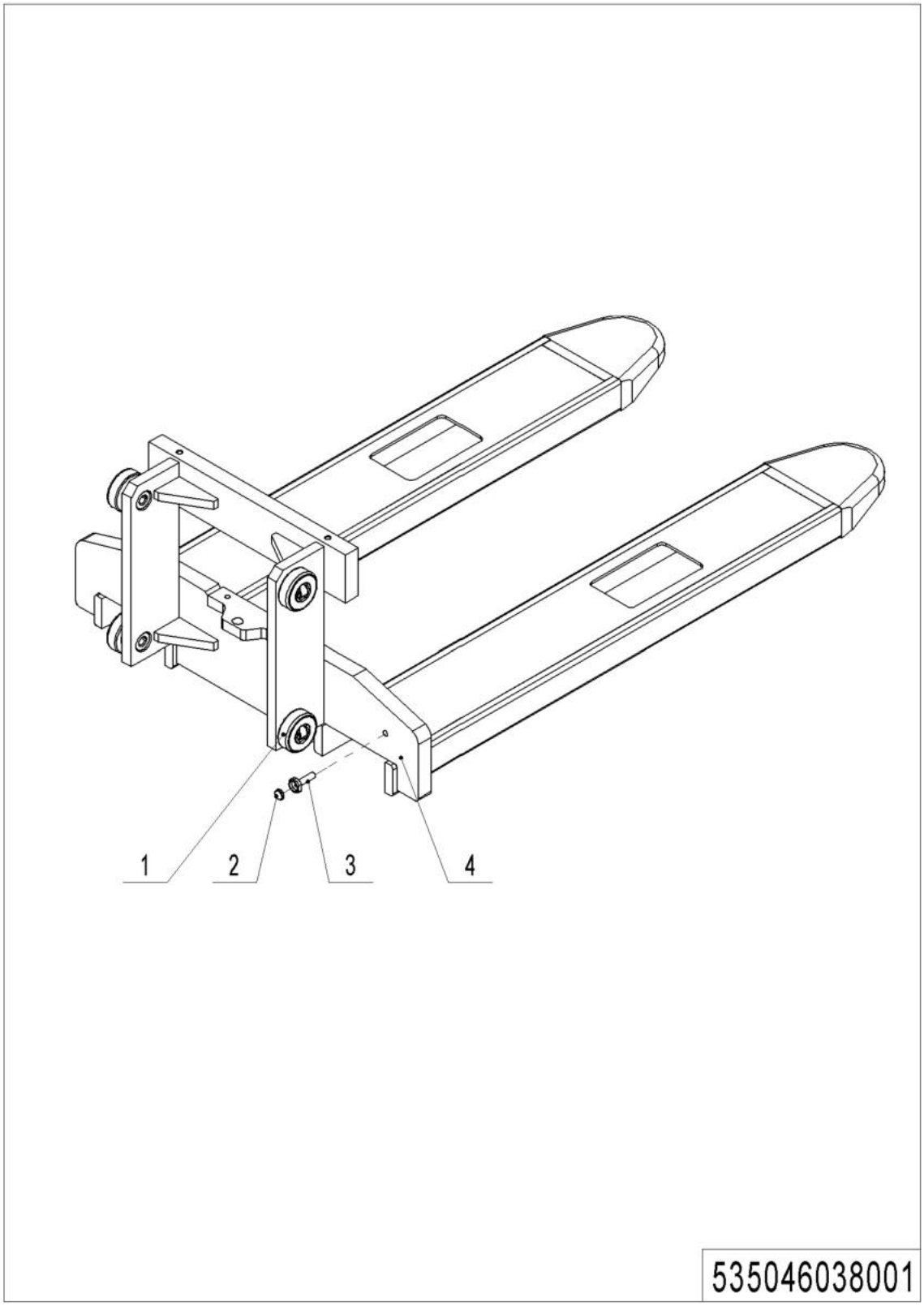

1= Supply as package. 2= Supply with constraints. 3= Phasing-out supply. 4= Supply as assembly. 5= Check other tables.

06 Fork Carriage (535046038001)

No.	Item Code	Mark	Item Description	Qty.	Substitute	Note
1	940200300022		Compound Roller	4		
2	940600100001		Magnetic Steel	1		
3	940600200001		Mounting Base	1		
4	535038010000	2	Fork(570x1150)	1		**DX**
4	535038010001	2	Fork(685x1150)	1		**DX**
4	535038010002	2	Fork(570x1150)	1		**TX**
4	535038010003	2	Fork(685x1150)	1		**TX**

Chapter 4: Mast System

01 Two-stage Mast Standard Lift (536246044001)

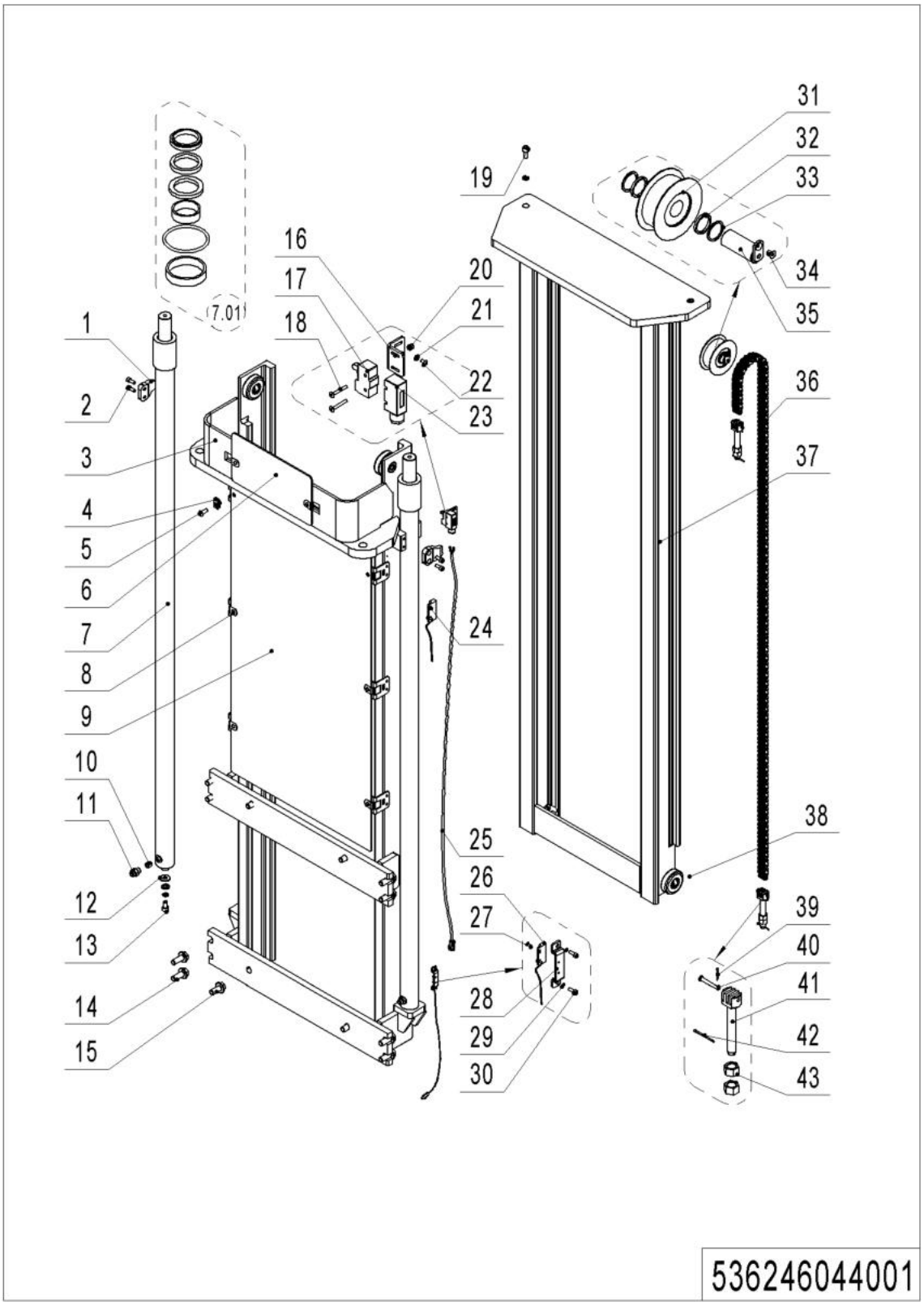

01 Two-stage Mast Standard Lift (536246044001)

No.	Item Code	Mark	Item Description	Qty.	Substitute	Note
1	275044020076		Fixing Plate	2		
2	910200200057	1	Screw	4		
3	535044010020	2	Outer Mast(2900)	1		
3	535044010019	2	Outer Mast(3200)	1		
3	535044010018	2	Outer Mast(3600)	1		
4	940400400003		Cage Nut	2		
5	941100100005	1	Screw	2		
6	535045020029		Guard Plate	1		
7	535044010008		Cylinder	2		**2900**
7	535044010007		Cylinder	2		**3200**
7	535044010006		Cylinder	2		**3600**
7.01	535098510003		Seal Kit	2		
8	940400300001		Spring Buckle	4		
8	940400300001		Spring Buckle	6		
9	535044020012		Guard Plate	1		**2900**
9	535044020011		Guard Plate	1		**3200**
9	535044020010		Guard Plate	1		**3600**
10	950600300001		Safety Valve	2		
11	950400400003		Joint	2		
12	534744520015		Subplate	2		
13	910200200096	1	Screw	2		
14	910100800006	1	Bolt	8		
15	910100800005	1	Bolt	4		
16	534744520036		Fixing Plate	1		
17	920200300001		Microswitch	1		
18	910200400007	1	Screw	2		
19	910200200097	1	Screw	2		
20	910300500001	1	Nut	2		
21	910400100003	1	Flat Washer	1		
22	910200300005	1	Screw	2		

1= Supply as package. 2= Supply with constraints. 3= Phasing-out supply. 4= Supply as assembly. 5= Check other tables.

01 Two-stage Mast Standard Lift (536246044001) Continuation

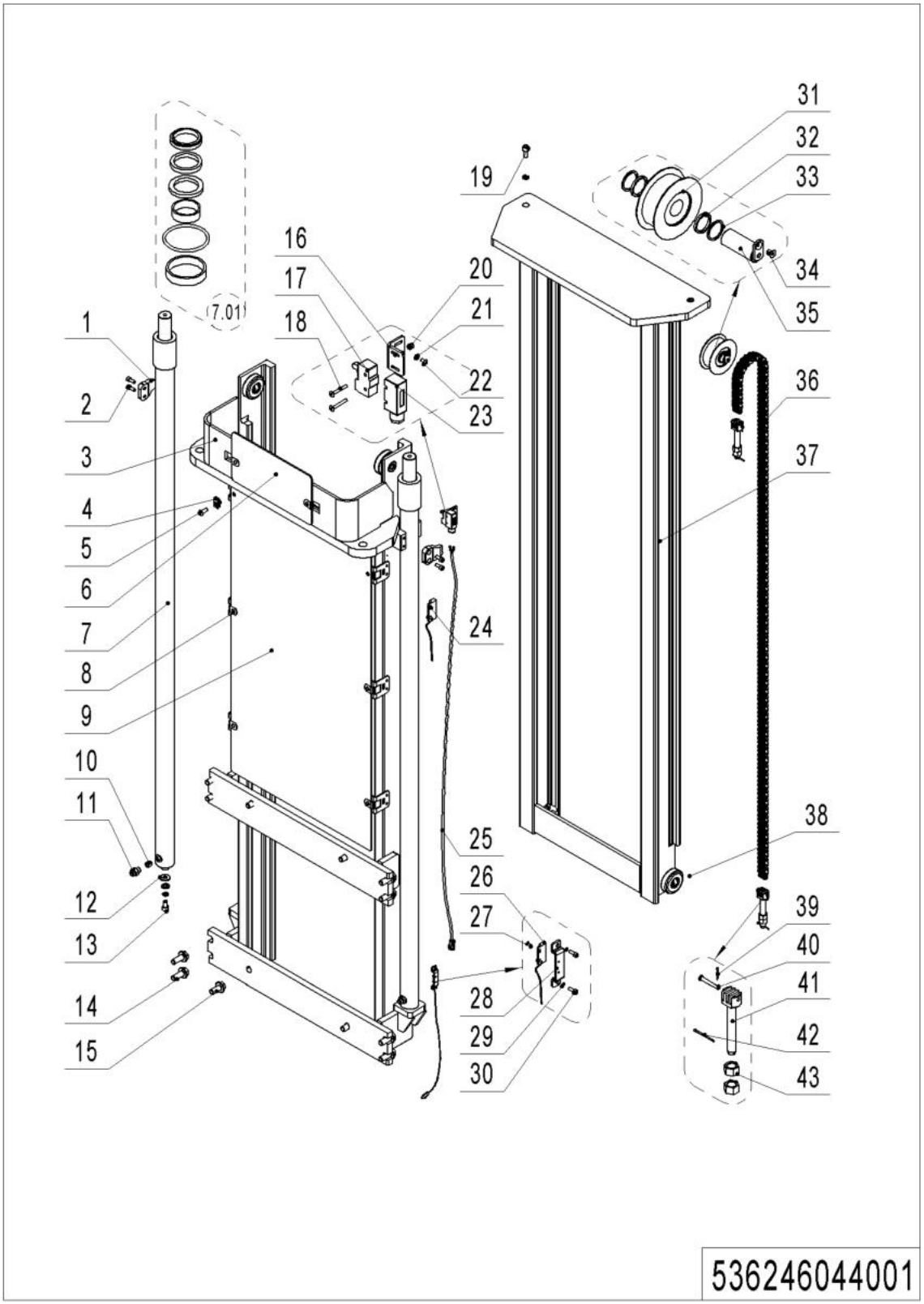

01 Two-stage Mast Standard Lift (536246044001) Continuation

No.	Item Code	Mark	Item Description	Qty.	Substitute	Note
23	920200300008		Protective Cover	1		
24	535933510014		Switch	1		**2900**
24	535933510015		Switch	1		**3200**
24	535933510017		Switch	1		**3600**
24	535933510021		Switch	1		**EN1175-2020**
25	535933510025		Wire Harness	1		
26	535933510005		Switch	1		
26	535933510020		Switch	1		**EN1175-2020**
27	910200500010	1	Screw	2		
27	910200500021	1	Screw	4		**EN1175-2020**
28	534744520059		Protective Cover	1		
28	534744520080		Protective Cover	2		**EN1175-2020**
29	910400500003	1	Spring Washer	2		
30	910200300006	1	Screw	4		
31	940200500010		Sprocket Bearing	1		
32	940600500009	1	Washer	2		
33	940600500008	1	Washer	2		
34	910200400016	1	Screw	1		
35	535045010008		Pin	1		
36	535044010011		Chain	1		**2900**
36	535045010009		Chain	1		**3200**
36	535044010009		Chain	1		**3600**
37	535044010017	2	Inner Mast(2900)	1		
37	535044010016	2	Inner Mast(3200)	1		
37	535044010015	2	Inner Mast(3600)	1		
38	940200300022		Compound Roller	4		
39	910600600015	1	Cotter Pin	2		
40	941100800009		Pin	2		
41	535045020024		Chain Anchor	2		
42	910600600023	1	Cotter Pin	2		
43	910300200008	1	Nut	4		

02 Two-stage mast full free lift (536246043501)

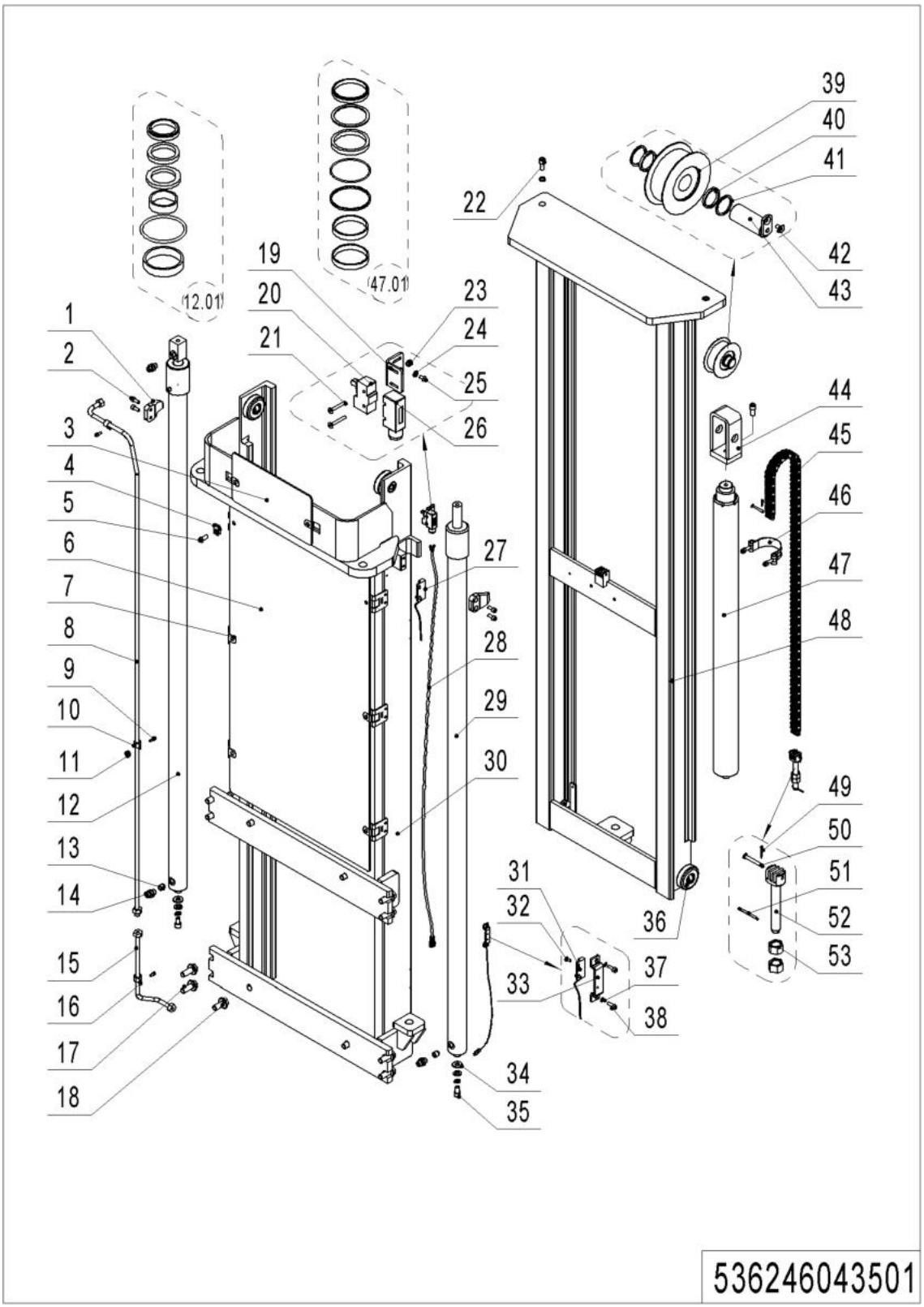

02 Two-stage mast full free lift (536246043501)

No.	Item Code	Mark	Item Description	Qty.	Substitute	Note
1	275044020076		Fixing Plate	2		
2	910200200057	1	Screw	4		
3	535045020029		Guard Plate	1		
4	940400400003		Cage Nut	2		
5	941100100005	1	Screw	2		
6	535043520005		Guard Plate	1		**2700**
6	535044020012		Guard Plate	1		**2900**
6	535044020011		Guard Plate	1		**3200**
6	535044020010		Guard Plate	1		**3600**
7	940400300001		Spring Buckle	4		
7	940400300001		Spring Buckle	6		
8	535043510011		Steel Tube	1		**2700**
8	535043510010		Steel Tube	1		**2900**
8	535043510009		Steel Tube	1		**3200**
8	535043510008		Steel Tube	1		**3600**
9	910200200035		Screw	2		
10	951000100001		Hose Clamp	2		
11	940600500001		Washer	2		
12	535043510003		Cylinder	1		**2700**
12	535043510002		Cylinder	1		**2900**
12	535043510001		Cylinder	1		**3200**
12	535043510000		Cylinder	1		**3600**
12.01	535098510002		Seal Kit	2		**Also for cylinder 29**
13	950600300001		Safety Valve	3		
14	950400400003		Joint	3		
15	535043510035		Steel Tube	1		
16	951000100003		Hose Clamp	1		
17	910100800006		Bolt	8		
18	910100800005		Bolt	4		
19	534744520036		Fixing Plate	1		

1= Supply as package. 2= Supply with constraints. 3= Phasing-out supply. 4= Supply as assembly. 5= Check other tables.

02 Two-stage mast full free lift (536246043501) Continuation 1

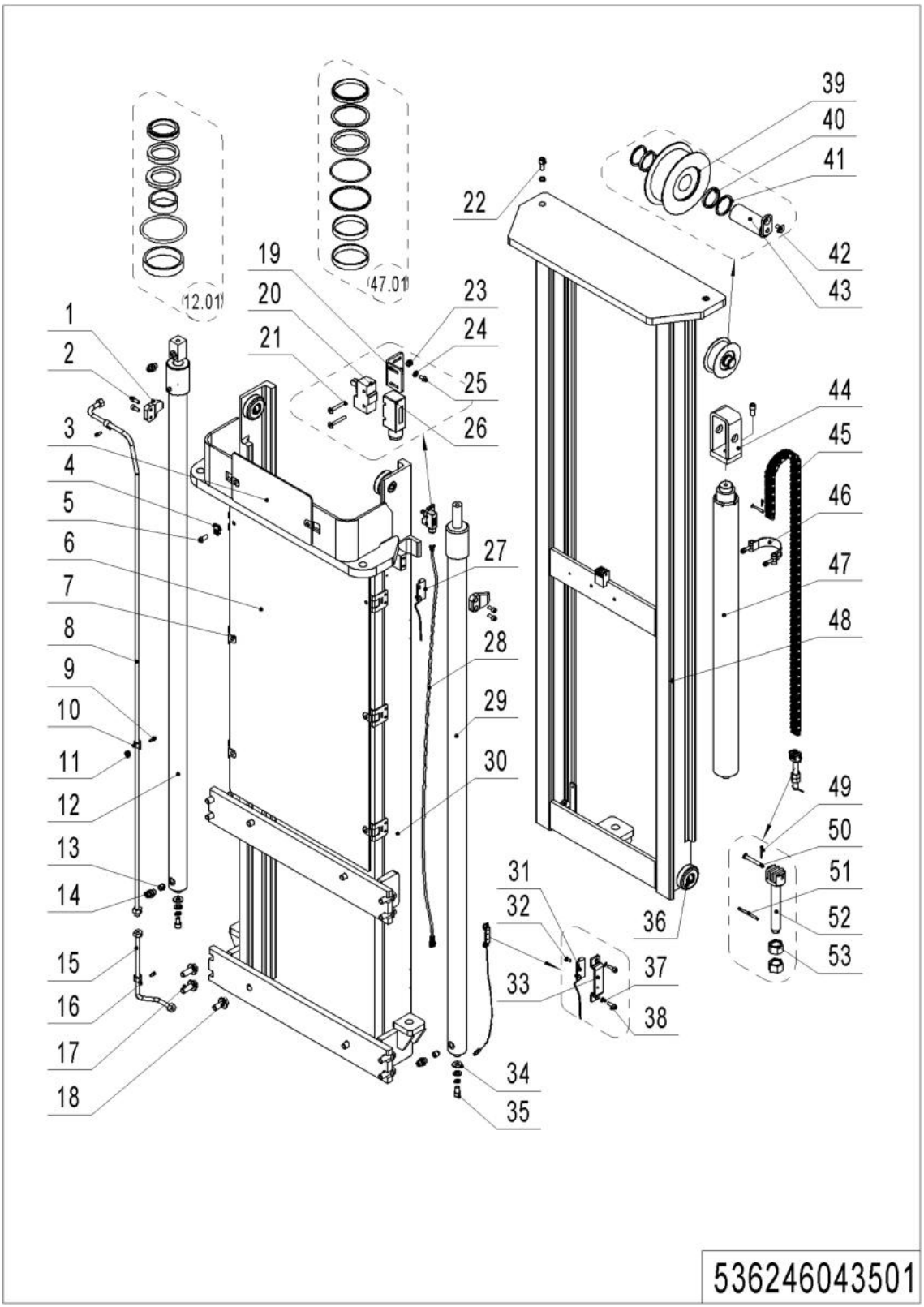

02 Two-stage mast full free lift (536246043501) Continuation 1

No.	Item Code	Mark	Item Description	Qty.	Substitute	Note
20	920200300001		Microswitch	1		
21	910200400007	1	Screw	2		
22	910200200097	1	Screw	3		
23	910300500001	1	Nut	2		
24	910400100003	1	Flat Washer	2		
25	910200300005	1	Screw	2		
26	920200300008		Protective Cover	1		
27	535933510013		Switch	1		**2700**
27	535933510014		Switch	1		**2900**
27	535933510015		Switch	1		**3200**
27	535933510017		Switch	1		**3600**
27	535933510021		Switch	1		**EN1175-2020**
28	535933510025		Wire Harness	1		
29	535043510007		Cylinder	1		**2700**
29	535043510006		Cylinder	1		**2900**
29	535043510005		Cylinder	1		**3200**
29	535043510004		Cylinder	1		**3600**
30	535043510039	2	Outer Mast(2700)	1		
30	535043510036	2	Outer Mast(2900)	1		
30	535043510038	2	Outer Mast(3200)	1		
30	535043510037	2	Outer Mast(3600)	1		
31	535933510005		Switch	1		
31	535933510020		Switch	1		**EN1175-2020**
32	910200500010	1	Screw	4		
32	910200500021	1	Screw	4		
33	534744520059		Protective Cover	2		
33	534744520080		Protective Cover	2		**EN1175-2020**
34	534744520015		Subplate	2		
35	910200200096	1	Screw	2		
36	940200300022		Compound Roller	4		

02 Two-stage mast full free lift (536246043501) Continuation 2

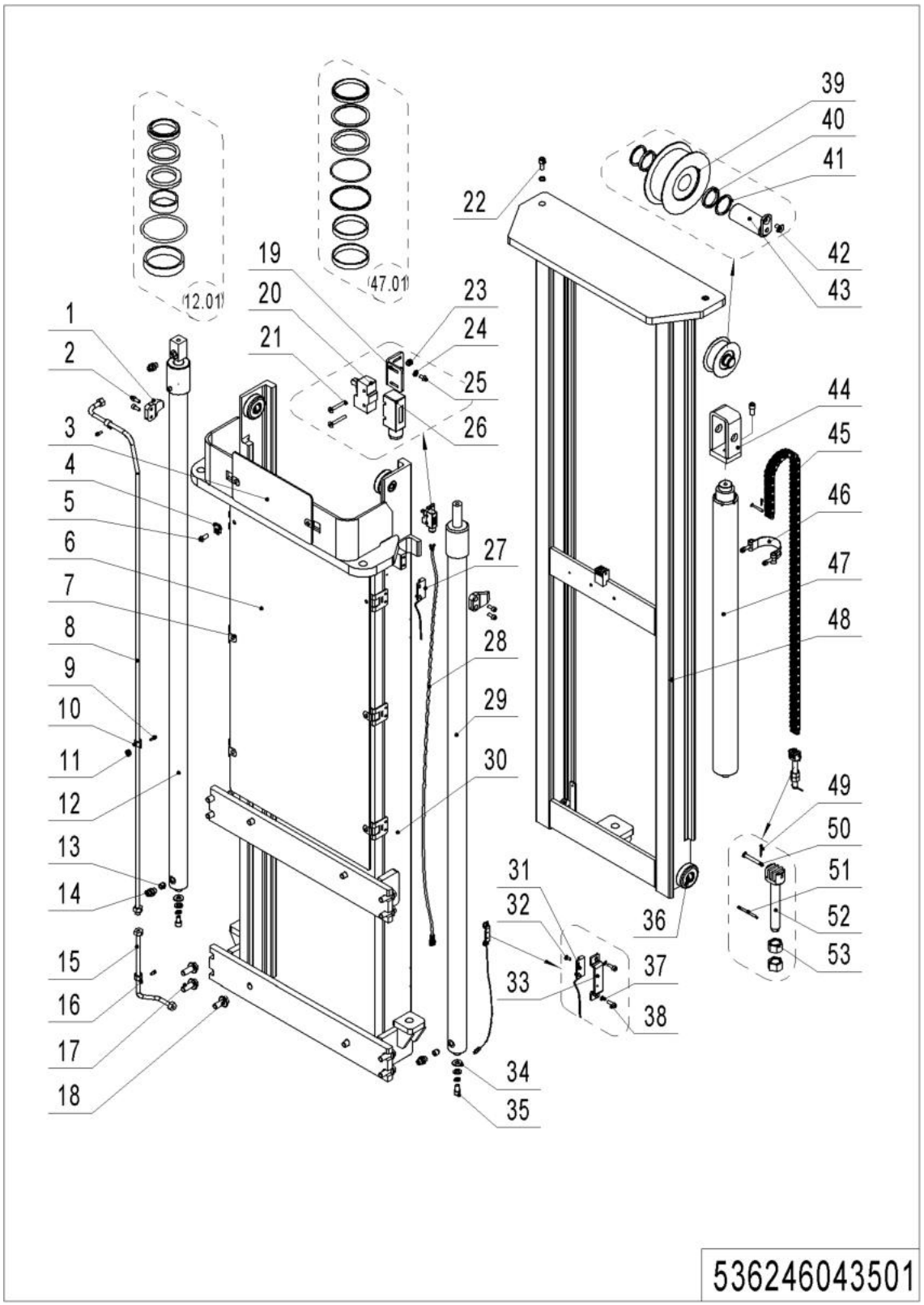

02 Two-stage mast full free lift (536246043501) Continuation 2

No.	Item Code	Mark	Item Description	Qty.	Substitute	Note
37	910400500003	1	Spring Washer	2		
38	910200300006	1	Screw	4		
39	940200500011		Sprocket Bearing	1		
40	940600500009	1	Washer	2		
41	940600500008	1	Washer	2		
42	910200400016	1	Screw	1		
43	535045010008		Pin	1		
44	535043510034		Yoke	1		
45	535043510025		Chain	1		**2700**
45	535043510024		Chain	1		**2900**
45	535043510023		Chain	1		**3200**
45	535043510022		Chain	1		**3600**
46	940800600002		Hoop	1		
47	535043510012		Cylinder	1		**2700**
47	534743510011		Cylinder	1		**2900**
47	534743510010		Cylinder	1		**3200**
47	534743510009		Cylinder	1		**3600**
47.01	534798510003		Seal Kit	1		
48	535043510033	2	Inner Mast(2700)	1		
48	535043510032	2	Inner Mast(2900)	1		
48	535043510031	2	Inner Mast(3200)	1		
48	535043510030	2	Inner Mast(3600)	1		
49	910600600015	1	Cotter Pin	2		
50	941100800009		Pin	2		
51	910600600023	1	Cotter Pin	1		
52	535045020024		Chain Anchor	1		
53	910300200008	1	Nut	2		

03 Triple Mast Standard Lift (536246045001)

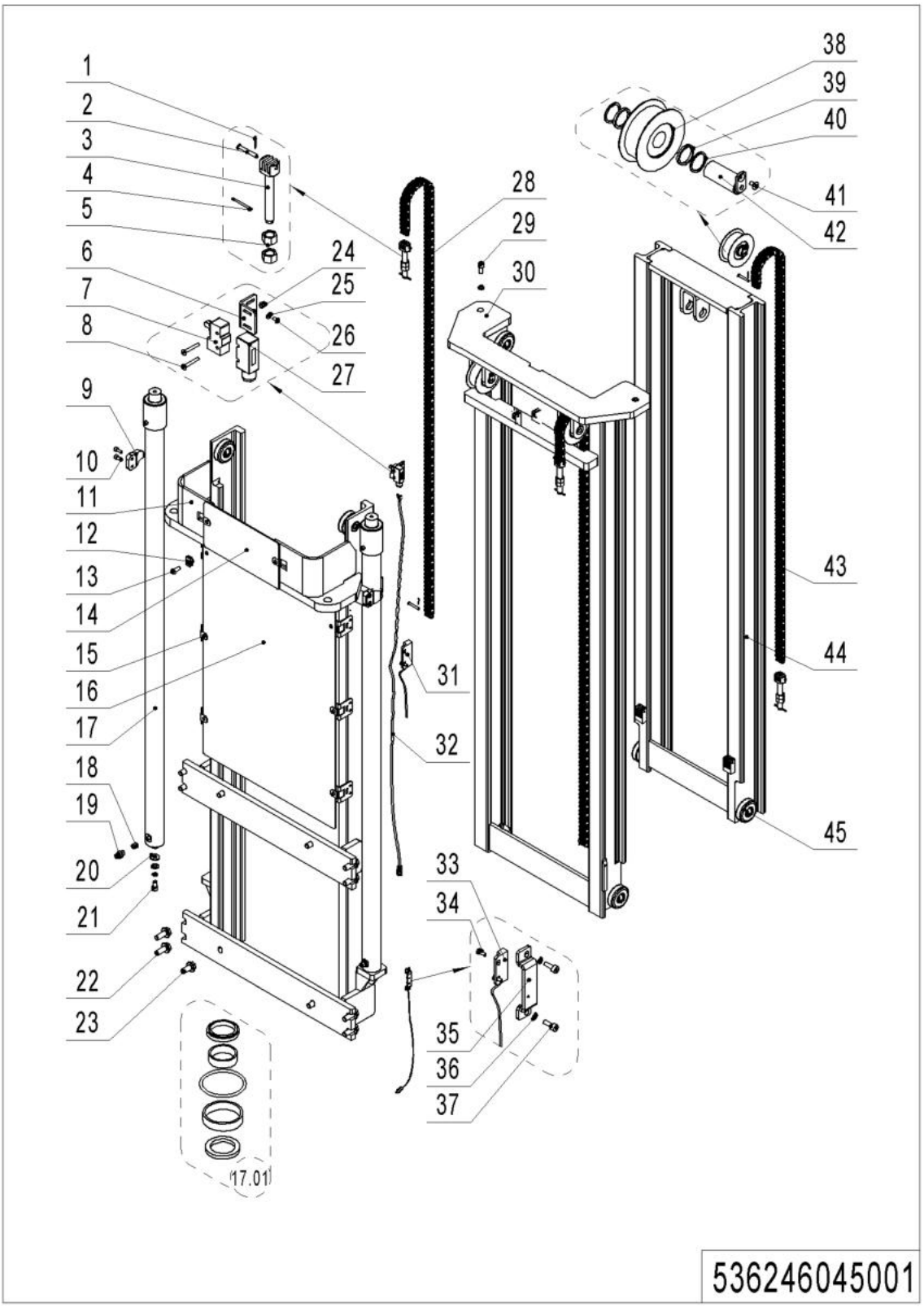

03 Triple Mast Standard Lift (536246045001)

No.	Item Code	Mark	Item Description	Qty.	Substitute	Note
1	910600600015		Cotter Pin	6		
2	941100800009		Pin	6		
3	535045020024		Chain Anchor	3		
4	910600600023		Cotter Pin	3		
5	910300200008		Nut	6		
6	534744520036		Fixing Plate	1		
7	920200300001		Microswitch	1		
8	910200400007		Screw	2		
9	275044020076		Fixing Plate	2		
10	910200200057		Screw	4		
11	535045010020		Outer Mast(4300)	1		
11	535045010019		Outer Mast(4600)	1		
12	940400400003		Cage Nut	2		
13	941100100005	1	Screw	2		
14	535045020029		Guard Plate	1		
15	940400300001		Spring Buckle	6		
16	535045020026		Guard Plate	1		**4300**
16	535044020011		Guard Plate	1		**4600**
17	535045010001		Cylinder	2		**4300**
17	535045010000		Cylinder	2		**4600**
17.01	535098510001		Seal Kit	2		
18	950600300001		Safety Valve	2		
19	950400400003		Joint	2		
20	534744520015		Subplate	2		
21	910200200096	1	Screw	2		
22	910100800006		Bolt	8		
23	910100800005		Bolt	4		
24	910300500001		Nut	2		
25	910400100003	1	Flat Washer	2		
26	910200300005	1	Screw	2		

1= Supply as package. 2= Supply with constraints. 3= Phasing-out supply. 4= Supply as assembly. 5= Check other tables.

03 Triple Mast Standard Lift (536246045001) Continuation

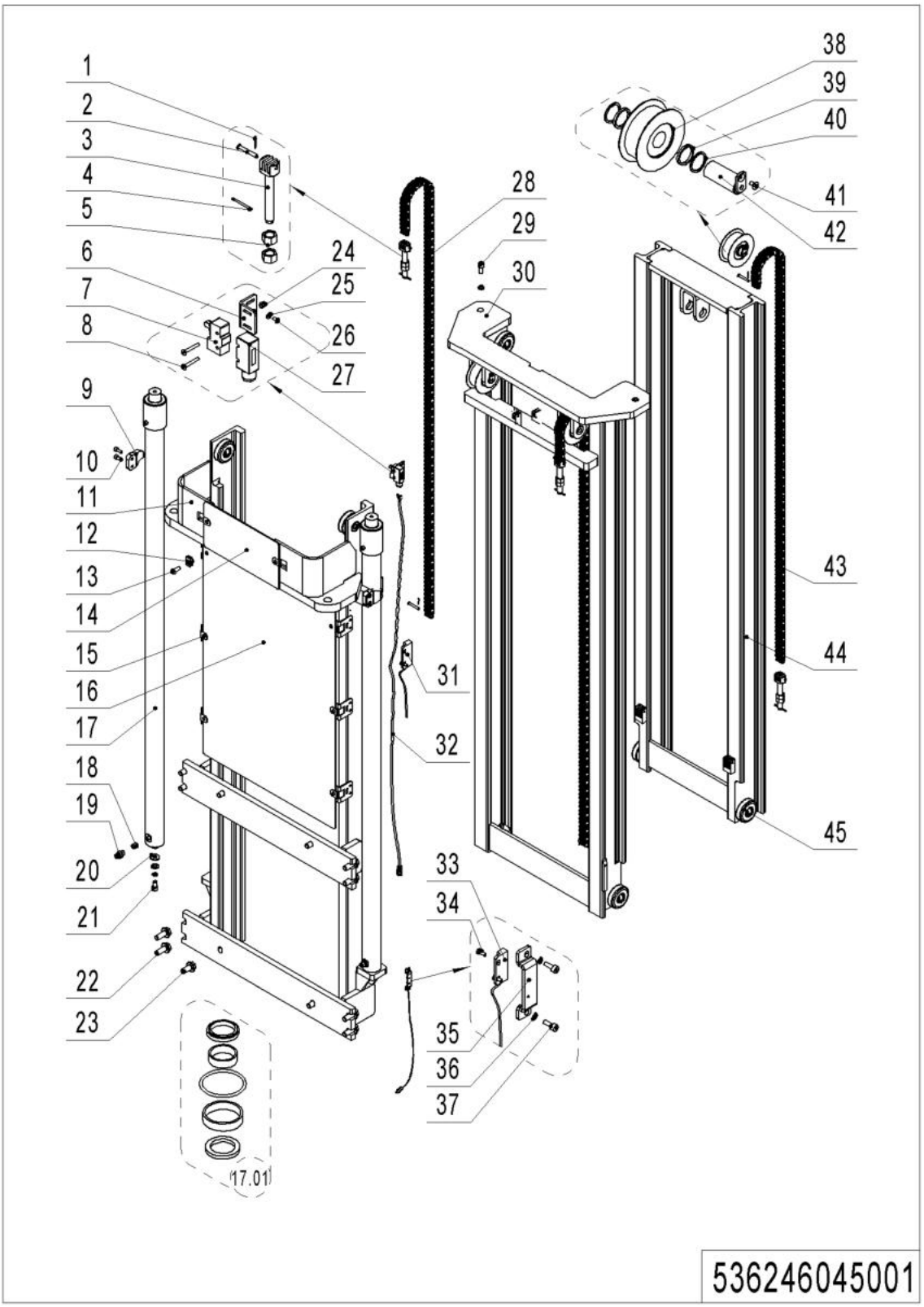

03 Triple Mast Standard Lift (536246045001) Continuation

No.	Item Code	Mark	Item Description	Qty.	Substitute	Note
27	920200300008		Protective Cover	1		
28	535044010010		Chain	2		**4300**
28	535045010010		Chain	2		**4600**
29	910200200097		Screw	2		
30	535045010016		Middle Mast(4300)	1		
30	535045010015		Middle Mast(4600)	1		
31	535933510014		Switch	1		**4300**
31	535933510015		Switch	1		**4600**
31	535933510021		Switch	1		**EN1175-2020**
32	535933510025		Wire Harness	1		
33	535933510005		Switch	1		
33	535933510020		Switch	1		**EN1175-2020**
34	910200500010	1	Screw	4		
34	910200500021	1	Screw	4		**EN1175-2020**
35	534744520059		Protective Cover	2		
35	534744520080		Protective Cover	2		**EN1175-2020**
36	910400500003	1	Spring Washer	4		
37	910200200014	1	Screw	4		
38	940200500011		Sprocket Bearing	1		
39	940600500009	1	Washer	2		
40	940600500008	1	Washer	2		
41	910200400016	1	Screw	3		
42	535045010008		Pin	3		
43	535044010011		Chain	1		**4300**
43	535044010010		Chain	1		**4600**
44	535045010018		Inner Mast(4300)	1		
44	535045010017		Inner Mast(4600)	1		
45	940200300022		Compound Roller	8		

04 Triple Mast Full Free Lift (536246044501)

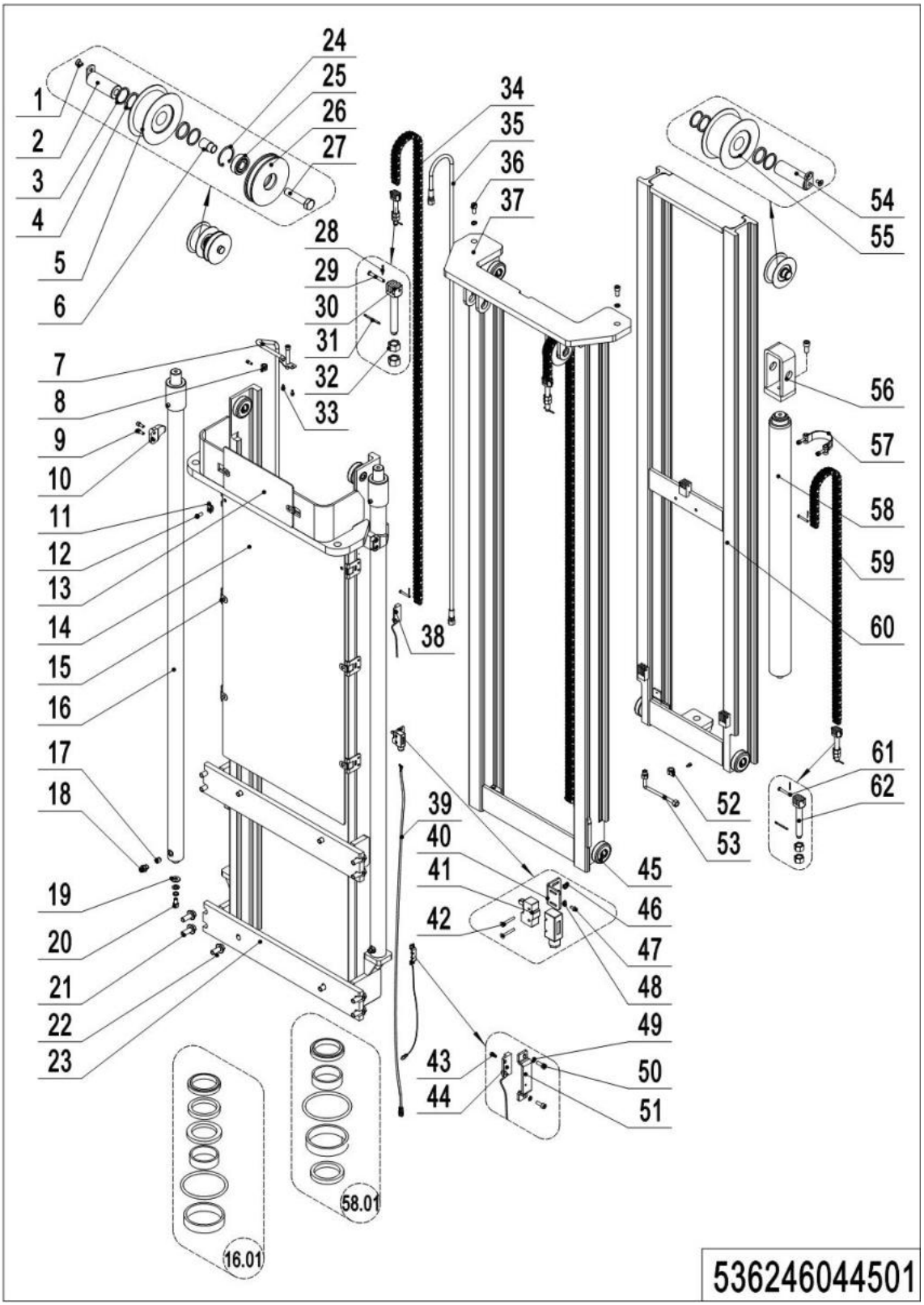

04 Triple Mast Full Free Lift (536246044501)

No.	Item Code	Mark	Item Description	Qty.	Substitute	Note
1	910200400016		Screw	3		
2	533544510006		Pin	2		
3	940200500010		Sprocket Bearing	2		
4	940600500009		Washer	6		
5	940600500008		Washer	6		
6	535944520001		Sleeve	1		
7	535044510014		Steel Tube	1		**4000**
7	535044510013		Steel Tube	1		**4300**
7	535044510012		Steel Tube	1		**4600**
8	951000100001		Hose Clamp	2		
9	910200200057		Screw	4		
10	275044020076		Fixing Plate	2		
11	940400400003		Cage Nut	2		
12	941100100005	1	Screw	2		
13	535045020029		Guard Plate	1		
14	535044520004		Guard Plate	1		**4000**
14	535045020026		Guard Plate	1		**4300**
14	535044020011		Guard Plate	1		**4600**
15	940400300001		Spring Buckle	6		
16	535044510002		Cylinder	1		**4000**
16	535044510001		Cylinder	1		**4300**
16	535044510000		Cylinder	1		**4600**
16.01	535098510000		Seal Kit	2		
17	950600300001		Safety Valve	3		
18	950400400003		Joint	3		
19	534744520015		Subplate	2		
20	910200200096	1	Screw	2		
21	910100800006		Bolt	8		
22	910100800005	1	Bolt	4		
23	535044510034	2	Outer Mast(4000)	1		**4000**

04 Triple Mast Full Free Lift (536246044501) Continuation 1

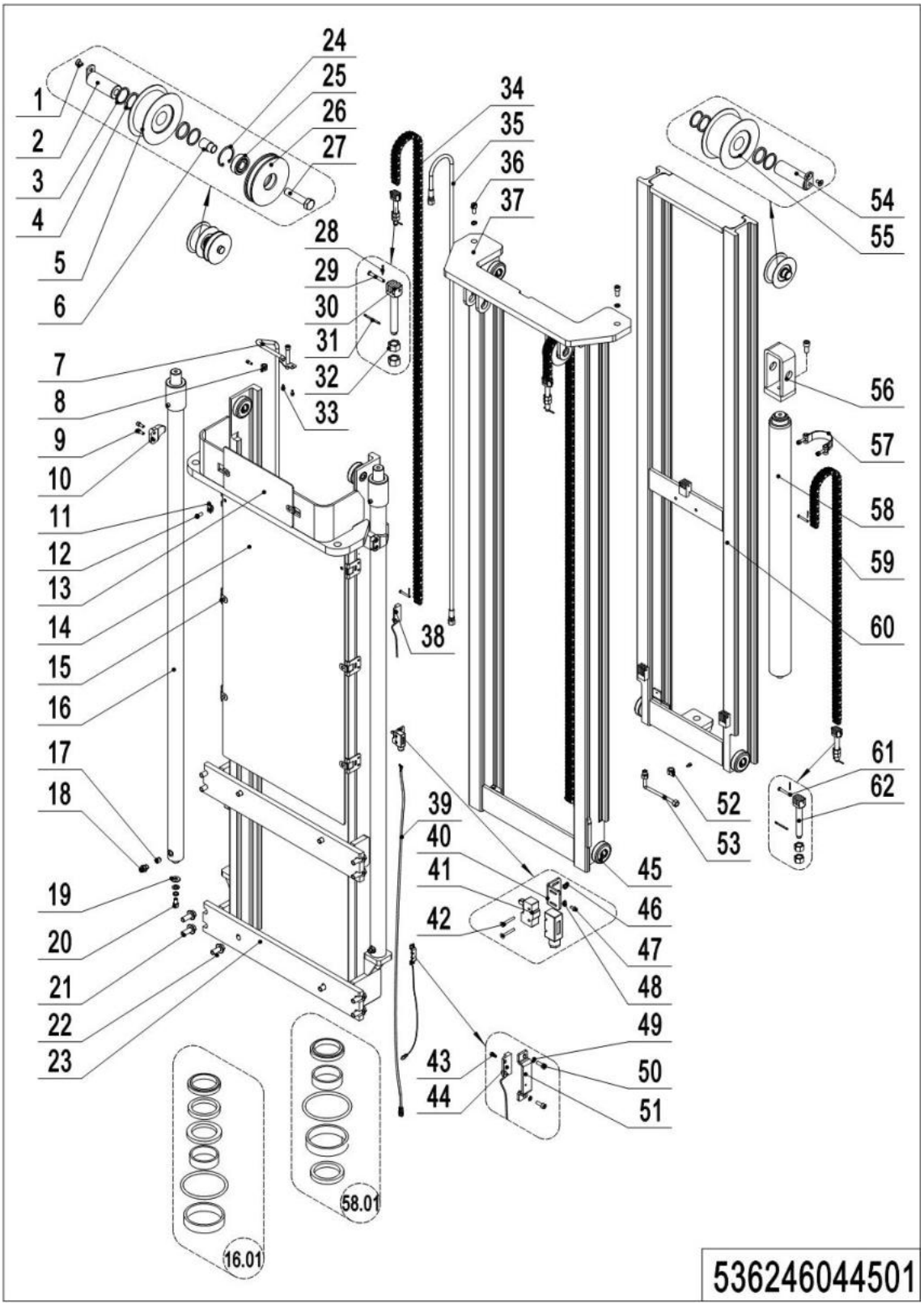

04 Triple Mast Full Free Lift (536246044501) Continuation 1

No.	Item Code	Mark	Item Description	Qty.	Substitute	Note
23	535044510033	2	Outer Mast(4300)	1		**4300**
23	535044510032	2	Outer Mast(4600)	1		**4600**
24	910401400013	1	Circlip	1		
25	910700200019		Bearing	1		
26	535944520000		Pulley	1		
27	910100100073	1	Bolt	1		
28	910600600006	1	Cotter Pin	6		
29	941100800012		Pin	4		
30	532644520038		Chain Anchor	2		
31	910600600023	1	Cotter Pin	3		
32	910300200008	1	Nut	6		
33	910200400016	1	Screw	2		
34	535044510020		Chain	2		**4000**
34	534145010005		Chain	2		**4300**
34	535044510016		Chain	2		**4600**
35	535044510019		Hose	1		**4000**
35	532644520143		Hose	1		**4300**
35	532644520144		Hose	1		**4600**
36	910200200097	1	Screw	3		
37	535044510026		Middle Mast(4000)	1		
37	535044510025		Middle Mast(4300)	1		
37	535044510024		Middle Mast(4600)	1		
38	535933510013		Switch	1		**4000**
38	535933510014		Switch	1		**4300**
38	535933510015		Switch	1		**4600**
38	535933510021		Switch	1		**EN1175-2020**
39	535933510025		Wire Harness	1		
40	534744520036		Fixing Plate	1		
41	920200300001		Microswitch	1		

04 Triple Mast Full Free Lift (536246044501) Continuation 2

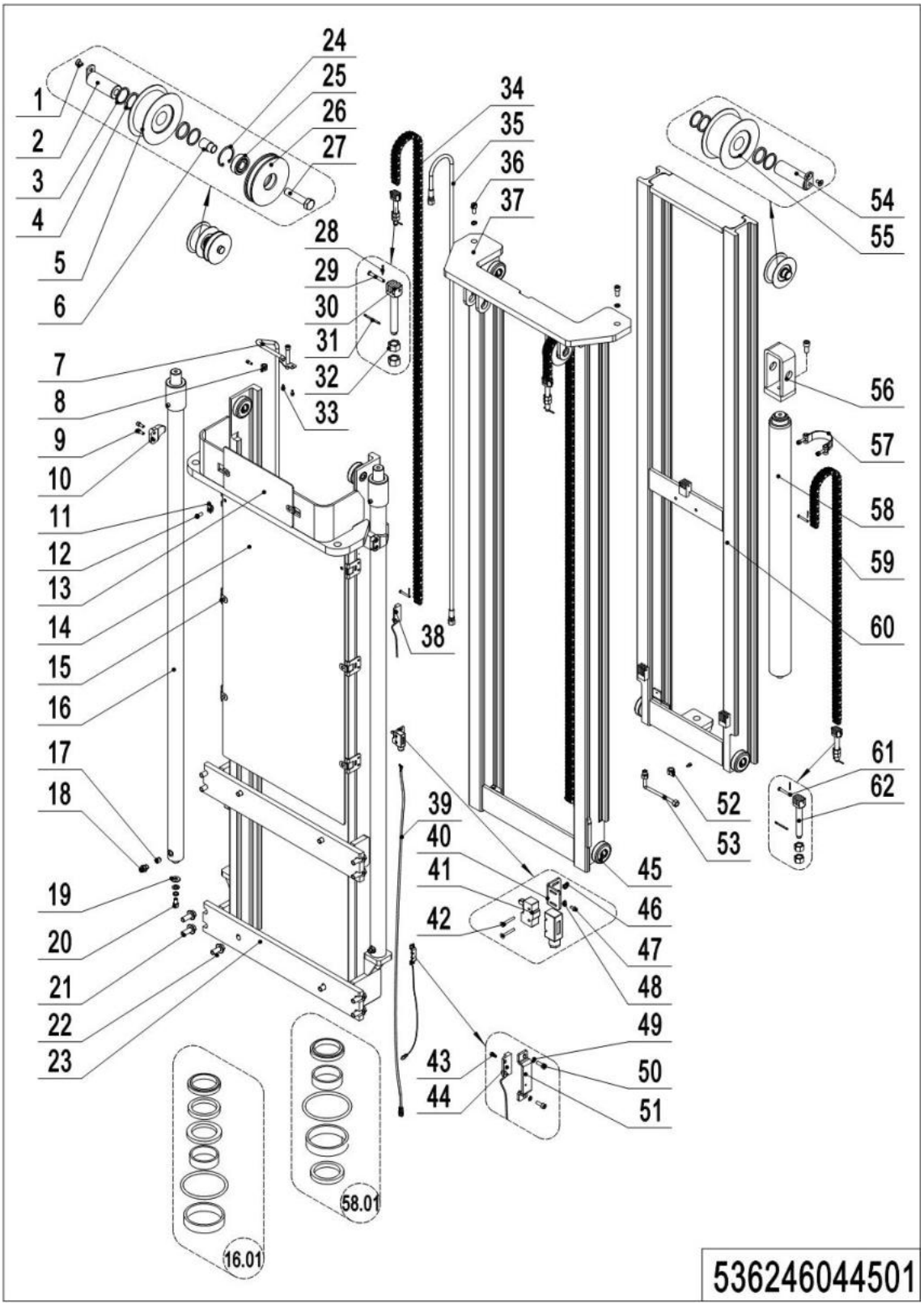

04 Triple Mast Full Free Lift (536246044501) Continuation 2

No.	Item Code	Mark	Item Description	Qty.	Substitute	Note
42	910200400007	1	Screw	2		
43	910200500010	1	Screw	4		
43	910200500021	1	Screw	4		EN1175-2020
44	535933510005		Switch	1		
44	535933510020		Switch	1		**EN1175-2020**
45	940200300022		Compound Roller	8		
46	910300500001	1	Nut	2		
47	910200300005	1	Screw	2		
48	910400100003	1	Flat Washer	2		
49	910400500003	1	Spring Washer	4		
50	910200200014	1	Screw	4		
51	534744520059		Protective Cover	2		
51	534744520080		Protective Cover	2		**EN1175-2020**
52	951000100003		Hose Clamp	1		
53	535044510015		Steel Tube	1		
54	535045010008		Pin	1		
55	940200500011		Sprocket Bearing	1		
56	535043510034		Yoke	1		
57	940800600002		Hoop	1		
58	535043510012		Cylinder	1		
58	534744510013		Cylinder	1		
58	534744510012		Cylinder	1		
58.01	534798510001		Seal Kit	1		
59	535043510025		Chain	1		
59	535044510030		Chain	1		
59	535043510023		Chain	1		
60	535044510029		Inner Mast(4000)	1		
60	535044510028		Inner Mast(4300)	1		
60	535044510027		Inner Mast(4600)	1		
61	941100800009		Pin	1		
62	535045020024		Chain Anchor	1		

Chapter 5: Steering System, Braking System, Wheels

01 Tiller Unit (535946011001)

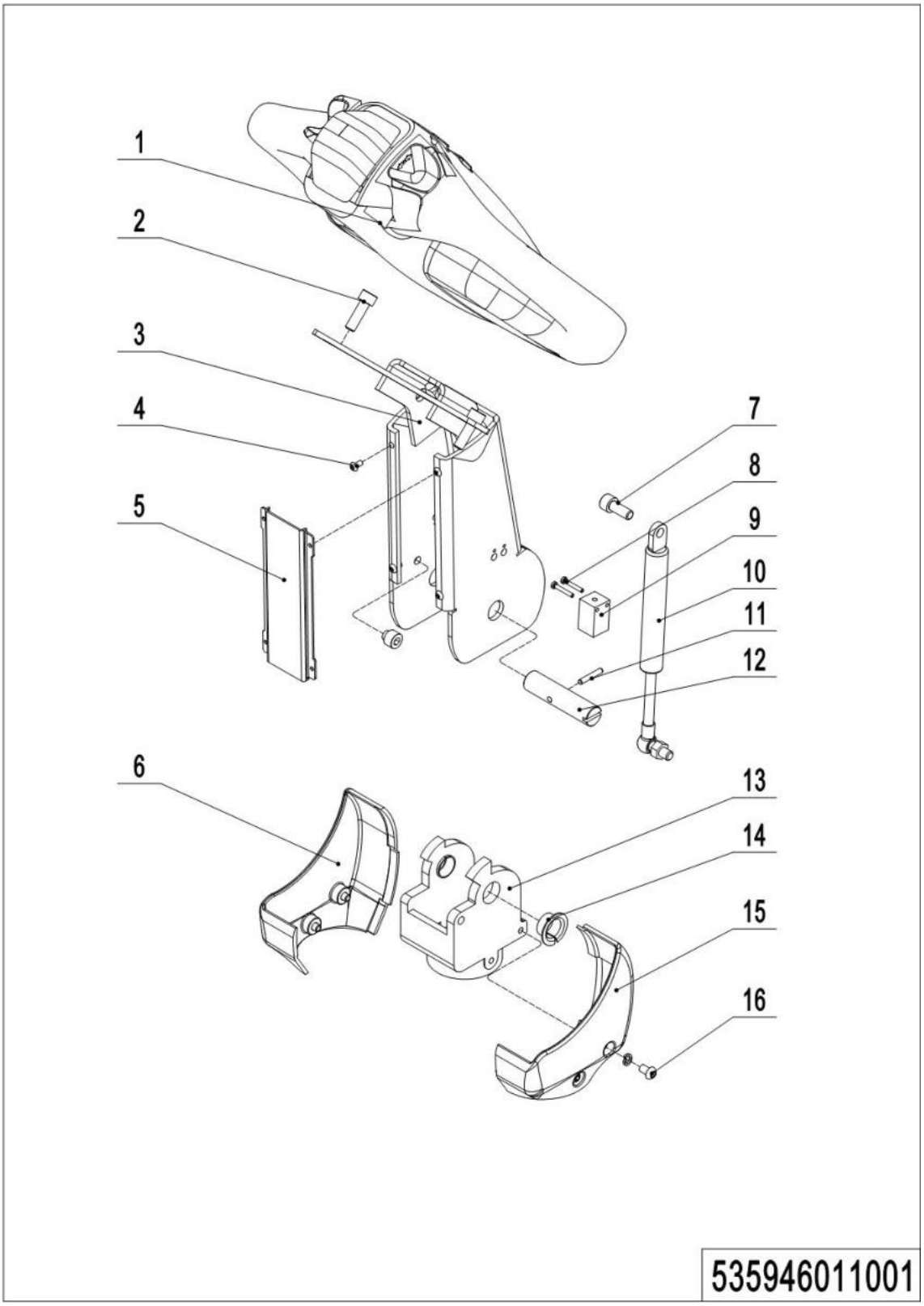

01 Tiller Unit (535946011001)

No.	Item Code	Mark	Item Description	Qty.	Substitute	Note
1	922100100001		Control Handle	1		**See 535946011002**
1	922100100099		Control Handle(EN1175-2020)	1		**See 535946011010**
2	910200200058	1	Screw	2		
3	535911010000	2	Tiller	1		
3	535911010001	2	Tiller	1		**Short tiller**
4	910200300005	1	Screw	4		
5	535911020003		Close Plate	1		
5	535911020008		Close Plate	1		**Short tiller**
6	535911020005		Protective Cover	1		
7	910200200057	1	Screw	1		
8	910200500015	1	Screw	2		
9	506733510002		Proximity Switch	1		
10	940400100001		Air Spring	1		
10	940400100045		Air Spring	1		**Short tiller**
11	910600400013		Spring Pin	1		
12	505611020008		Axle	1		
13	535911020004		Bracket	1		
13	535911020009		Bracket	1		**Short tiller**
14	940500200002		Bushing	2		
15	535911020006		Protective Cover	1		
16	910200300016	1	Screw	4		

02 Control Handle (535946011002)

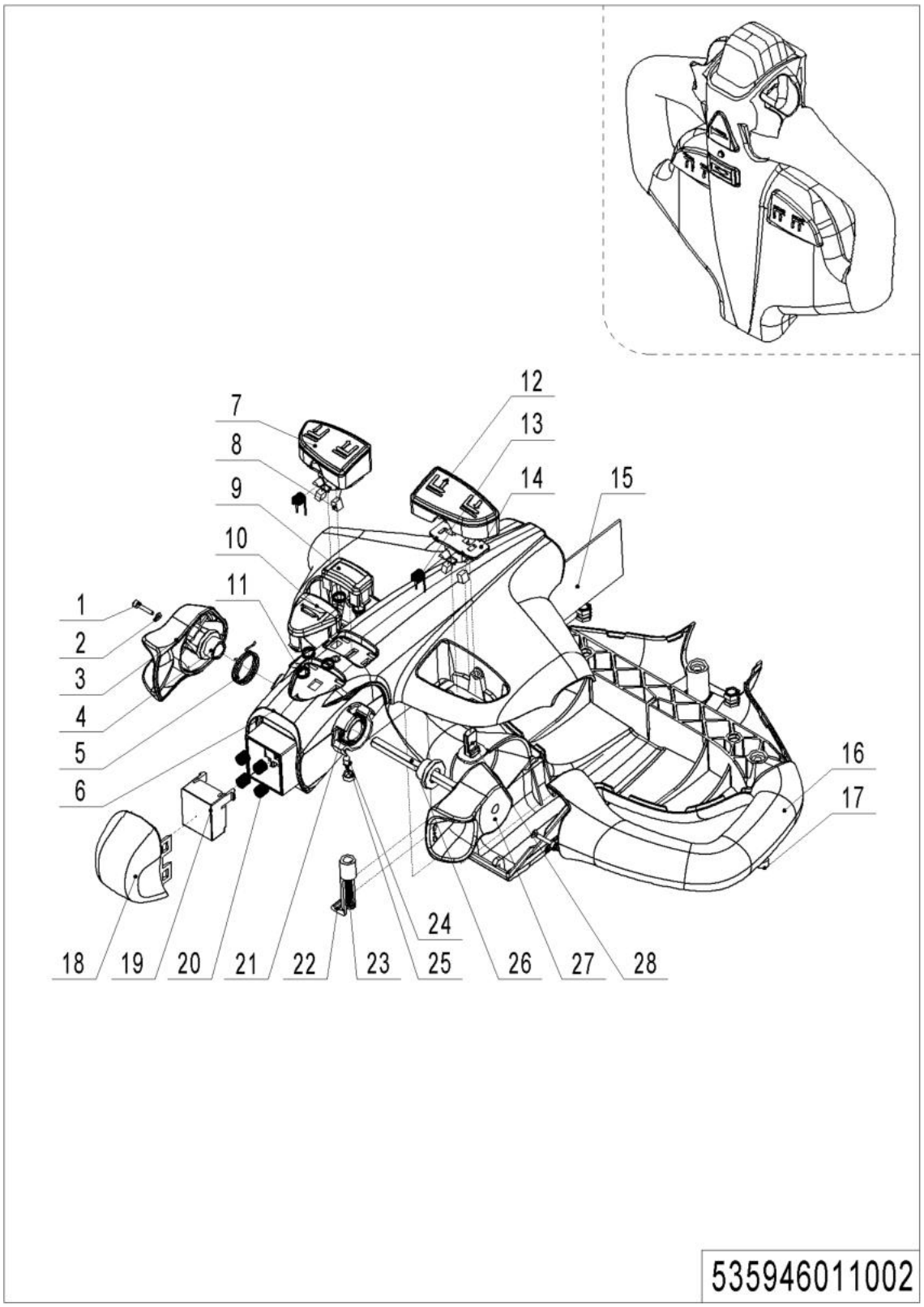

1= Supply as package. 2= Supply with constraints. 3= Phasing-out supply. 4= Supply as assembly. 5= Check other tables.

02 Control Handle (535946011002)

No.	Item Code	Mark	Item Description	Qty.	Substitute	Note
--	922100100001		Control Handle	1		
1	505698520008		Screw	2		
2	505698520009		Washer	2		
3	505698520001		Traction lever	1		
4	505698520004		Sleeve	2		
5	505698520027		Torsional Spring	1		
6	505698520014		Handle Cap	1		
7	505698520016		Button cap	1		
8	505698520005		Magnet	4		
9	505698520021		Button Cap	1		
10	505698520002		Horn Button	1		
11	505698520003		Spring	5		
12	505698520022		Button Cap	1		
13	505698520018		Torsional Spring	2		
14	505698520017		Fixing Base	2		
15	505698520028		circuit Board	1		
16	505698520015		Handle Cap	1		
17	505698520007		Screw	3		
18	505698520020		Button Cap-	1		
19	505698520019		Pedestal	1		
20	505698520006		Spring	4		
21	505698520026		Torsional Spring	1		
22	505698520012		Clamp	1		
23	505698520023		Screw	1		
24	505698520024		Light	1		
25	505698520025		Lamp Holder	1		
26	505698520011		Axle-Traction lever	1		
27	505698520010		Traction lever	1		
28	505698520013		Sensor	2		

03 Control Handle (EN1175-2020)(535946011010)

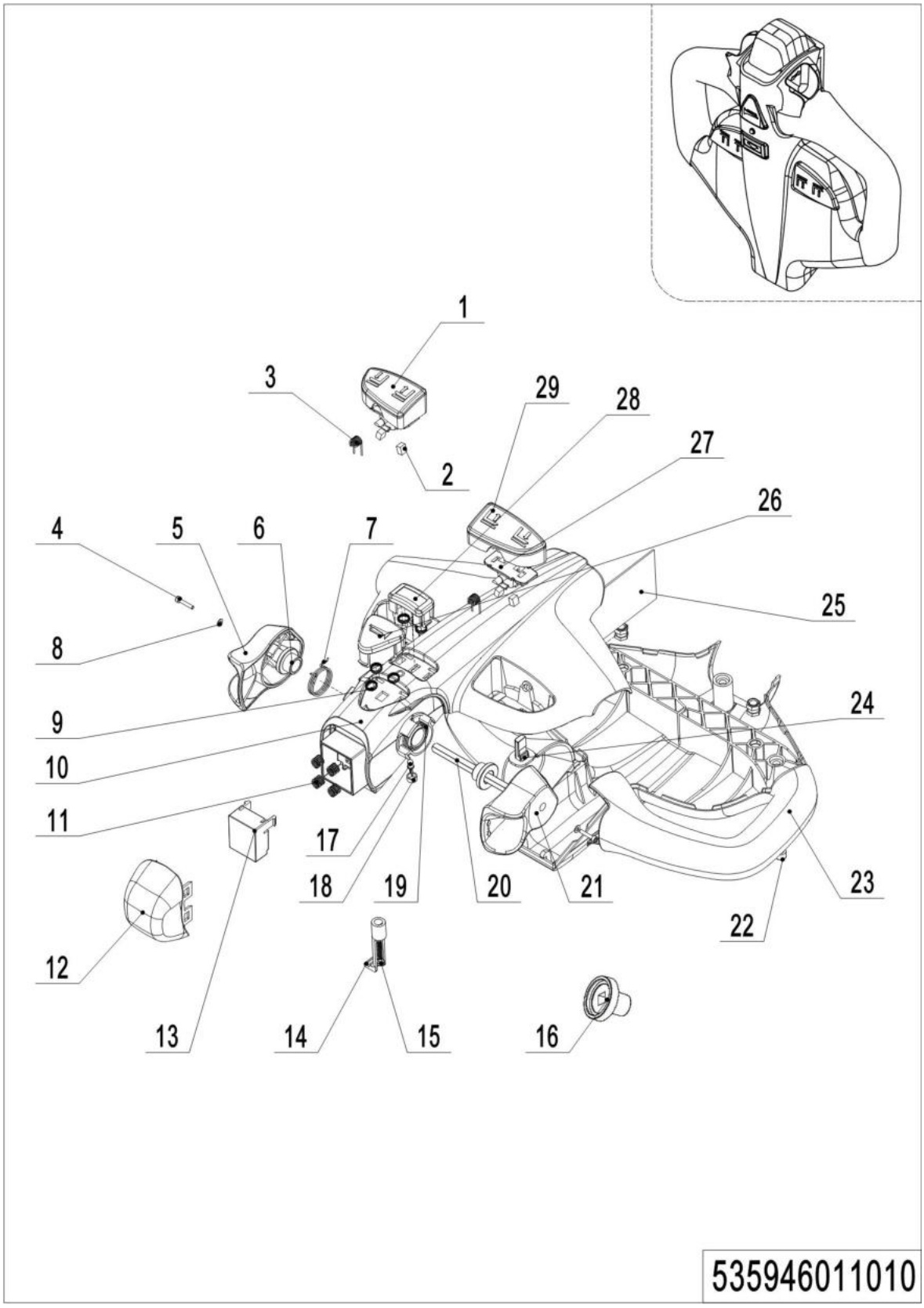

03 Control Handle(EN1175-2020) (535946011010)

No.	Item Code	Mark	Item Description	Qty.	Substitute	Note
--	922100100099		Control Handle(EN1175-2020)	1		
1	505698520016		Button cap	1		
2	505698520005		Magnet	4		
3	505698520018		Torsional Spring	2		
4	505698520008		Screw	2		
5	505698520001		Traction lever	1		
6	505698520004		Sleeve	2		
7	505698520027		Torsional Spring	1		
8	505698520009		Washer	2		
9	505698520003		Spring	5		
10	505698520099		Handle Cap	1		
11	505698520006		Spring	4		
12	505698520020		Button Cap	1		
13	505698520100		Pedestal	1		
14	505698520012		Clamp	1		
15	505698520023		Screw	1		
16	505698520102		Holder	2		
17	505698520024		Light	1		
18	505698520025		Light Holder	1		
19	505698520026		Torsional Spring	1		
20	505698520011		Axle-Traction lever	1		
21	505698520010		Traction lever	1		
22	505698520007		Screw	3		
23	505698520015		Handle Cap	1		
24	505698520013		Sensor	2		
25	505698520101		Circuit Board	1		
26	505698520002		Horn Button	1		
27	505698520017		Fixing Base	2		
28	505698520021		Button Cap	1		
29	505698520022		Button cap	1		

1= Supply as package. 2= Supply with constraints. 3= Phasing-out supply. 4= Supply as assembly. 5= Check other tables.

04 Load Wheel (532946017001)

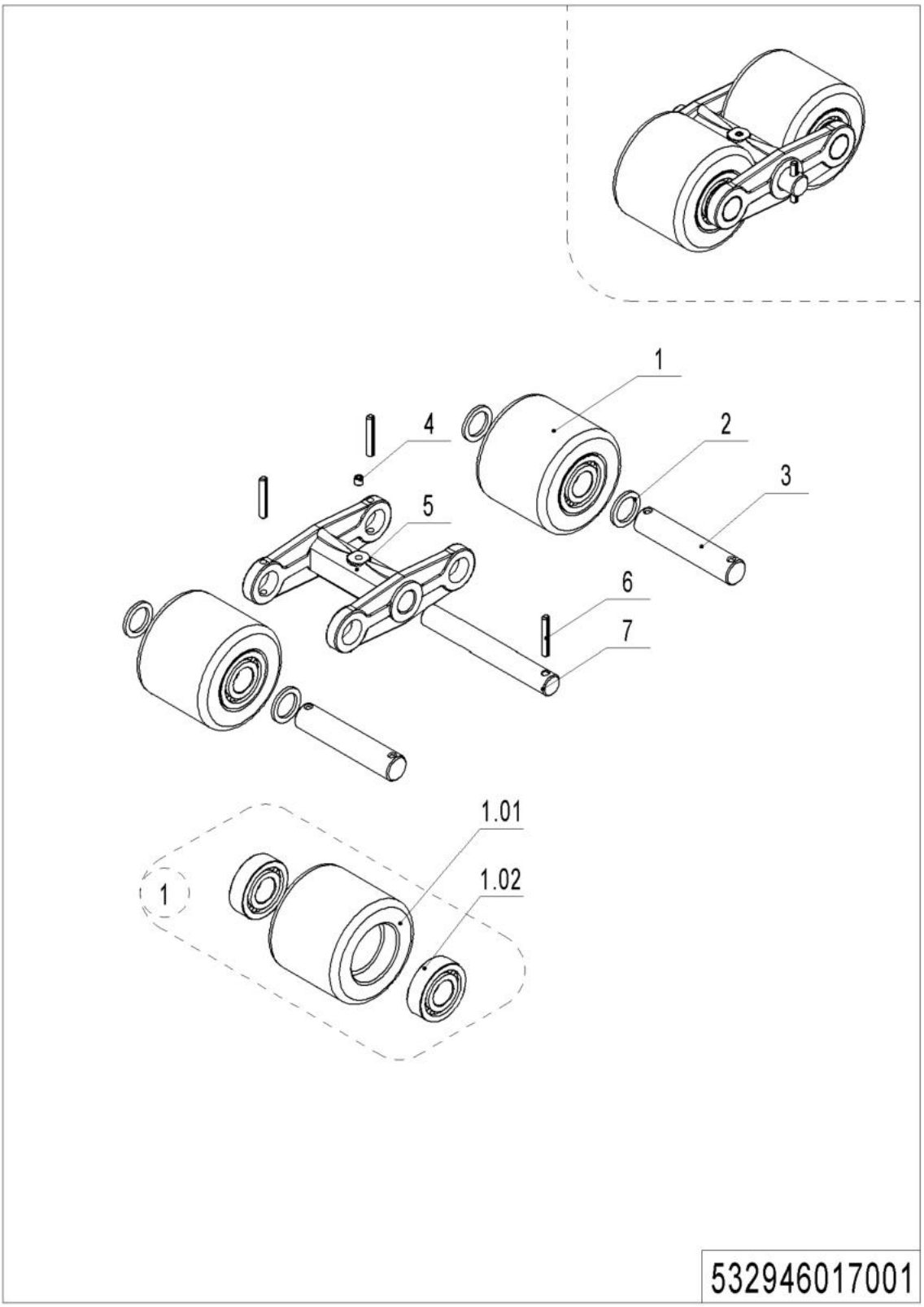

1= Supply as package. 2= Supply with constraints. 3= Phasing-out supply. 4= Supply as assembly. 5= Check other tables.

04 Load Wheel (532946017001)

No.	Item Code	Mark	Item Description	Qty.	Substitute	Note
--	532998510000		Wheel	2		
1	532998510001		Wheel	4		
1.01	940300300009		WheelΦ84x70	4		
1.02	910700200019		Bearing	8		
2	940600500004		Washer	8		
3	504117020005		Axle	4		
4	911200100001		Oil Cup	2		
5	504117020004		Wheel Carrier	2		
6	910600400027	1	Spring Pin	6		
7	504117020003		Axle	2		

05 Caster (534746016501)

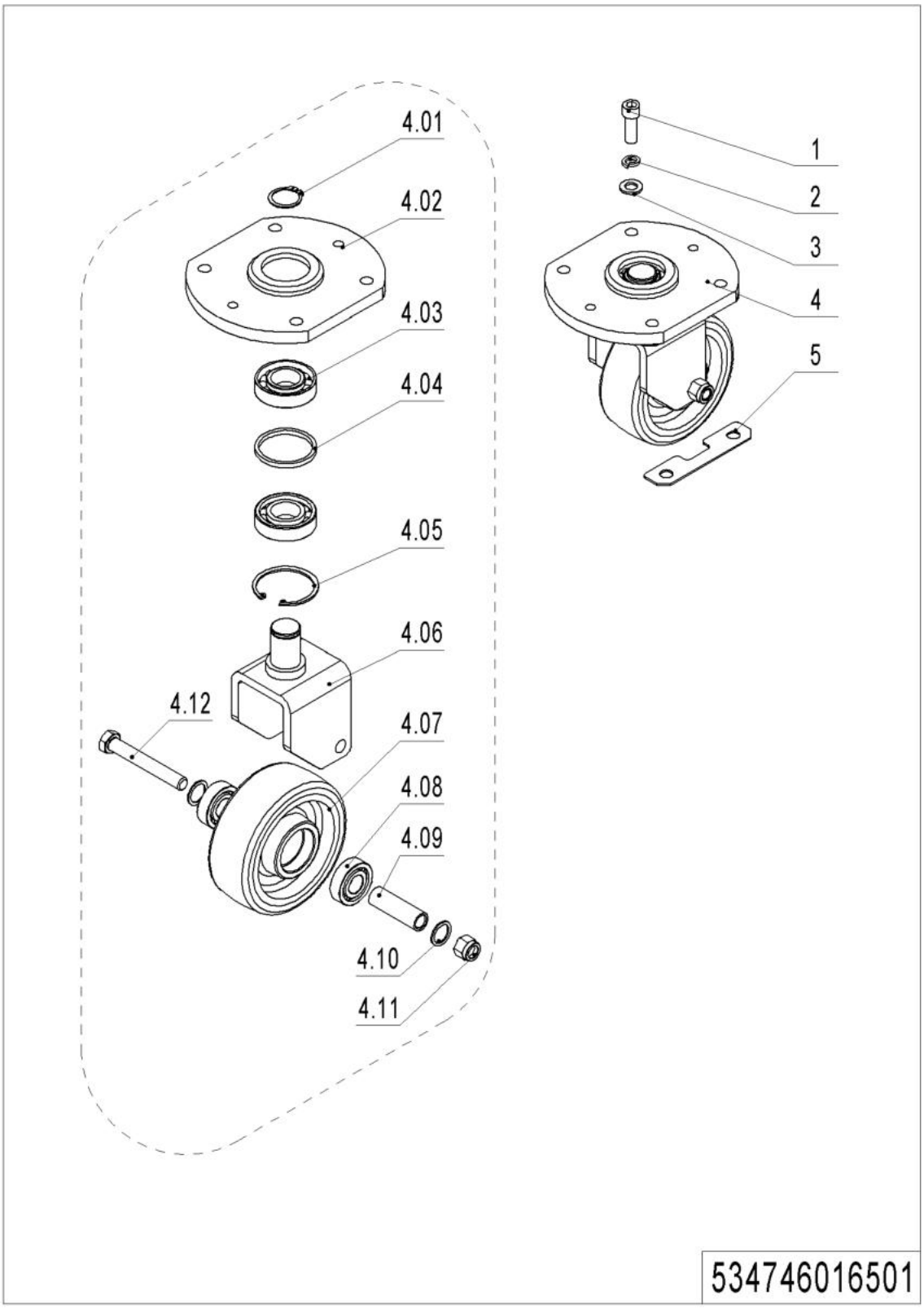

1= Supply as package. 2= Supply with constraints. 3= Phasing-out supply. 4= Supply as assembly. 5= Check other tables.

05 Caster (534746016501)

No.	Item Code	Mark	Item Description	Qty.	Substitute	Note
1	910200200099		Screw	4		
2	910400500008		Spring Washer	4		
3	910400100008		Flat Washer	4		
4	534716510002		Caster Assembly	1		
4.01	910401300016		Circlip	1		
4.02	534716510000		Bracket	1		
4.03	910700400004		Bearing	2		
4.04	532616520001		Check Ring	1		
4.05	910401400018	1	Circlip	1		
4.06	534716510001	2	Wheel Carrier	1		
4.07	940300300020		WheelΦ150x54	1		
4.08	910700200019		Bearing	2		
4.09	532616520003		Bushing	1		
4.10	940600500014		Washer	2		
4.11	910300500007	1	Nut	1		
4.12	910100100069	1	Bolt	1		
5	534721520026		Subplate	6		

Chapter 6: Electrical Parts

01 Display Assembly (535946010001)

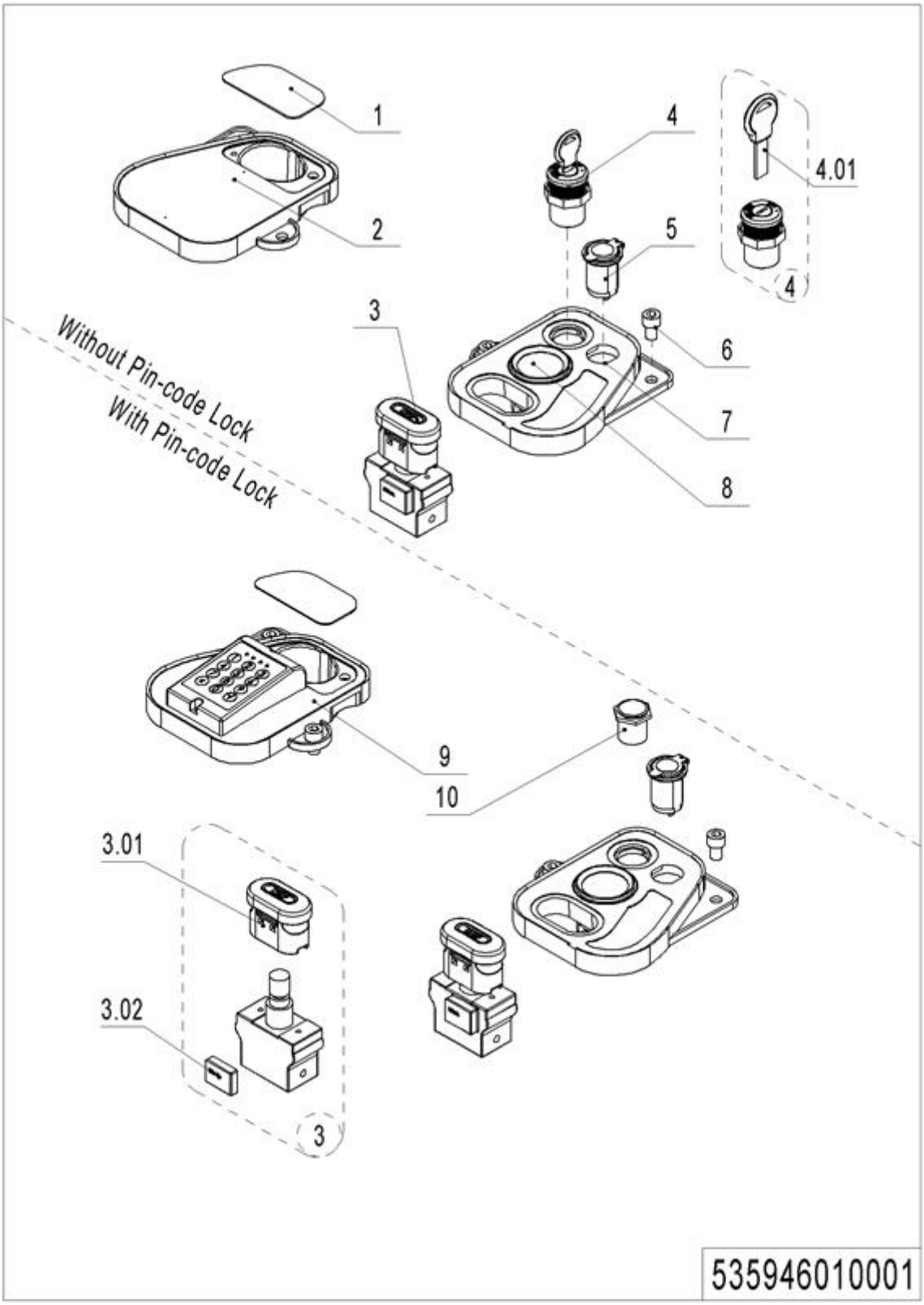

01 Display Assembly (535946010001)

No.	Item Code	Mark	Item Description	Qty.	Substitute	Note
1	535910020003		Close Plate	1		**External charger**
2	535910020002		Bezel	1		
3	920200100009		Emergency Button	1		
3.01	920200100010		Emergency Button	1		
3.02	920200100012		Emergency Button	1		
4	505634010000		Key Switch	1		
4	505634010001		Key Switch	1		Li battery
4.01	920200200012		Key	1		
4.01	403898520003		Key	1		Li battery
5	206033010036		USB interface	1		
6	910200200074	1	Screw	4		
7	535910020001		Bezel	1		
8	921100100012		Display	1		**MDI**
8	921100100049		Display	1		**D13L**
9	920200200014		Pin-code Lock	1		
10	506734010000		Button	1		

02 Display Assembly(EN1175-2020) (535946010003)

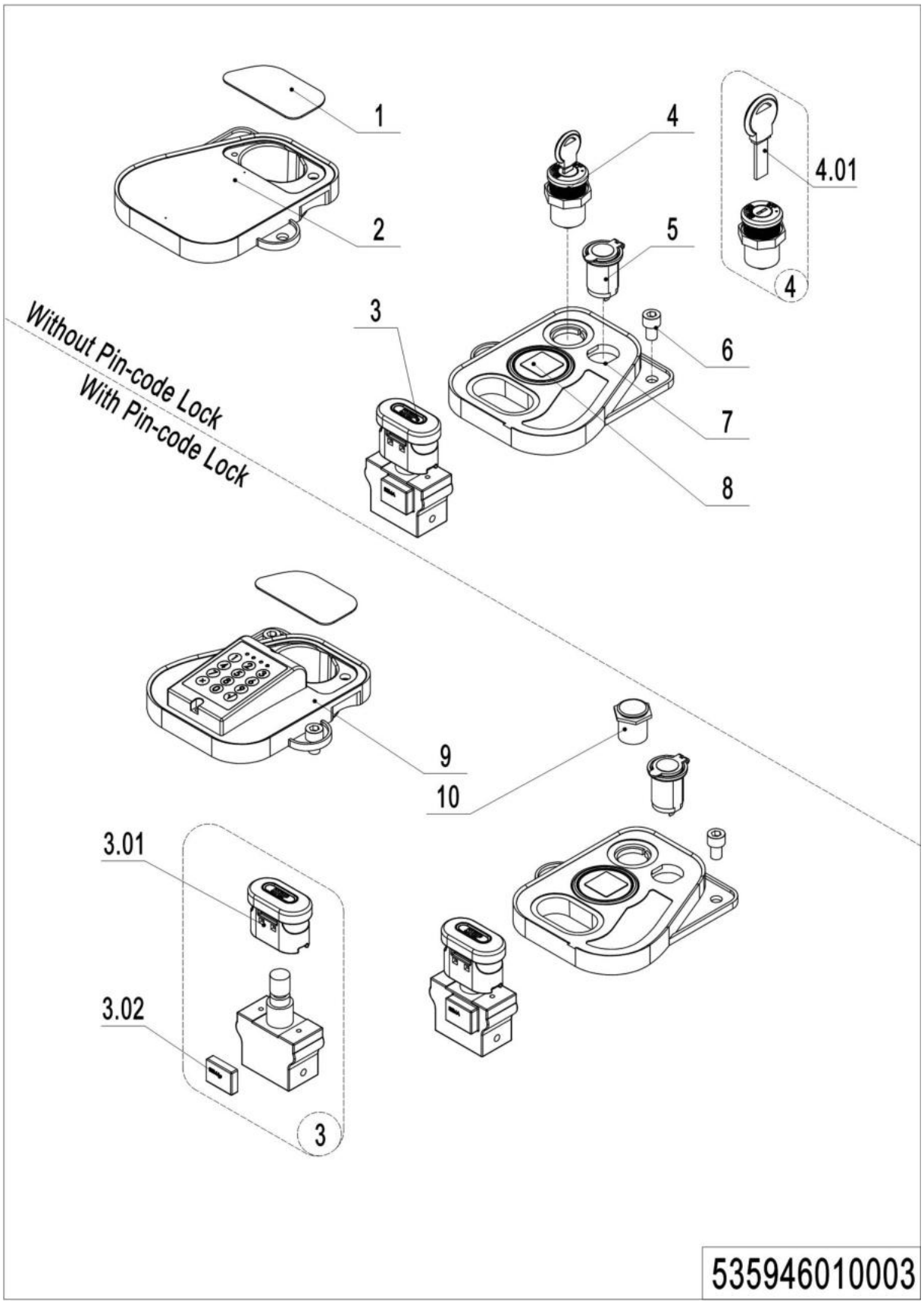

1= Supply as package. 2= Supply with constraints. 3= Phasing-out supply. 4= Supply as assembly. 5= Check other tables.

02 Display Assembly(EN1175-2020) (535946010003)

No.	Item Code	Mark	Item Description	Qty.	Substitute	Note
1	535910020003		Close Plate	1		**External charger**
2	535910020002		Bezel	1		
3	920200100009		Emergency Button	1		
3.01	920200100010		Emergency Button	1		
3.02	920200100012		Emergency Button	1		
4	505634010000		Key Switch	1		
4.01	920200200012		Key	1		
5	206033010036		USB interface	1		
6	910200200074	1	Screw	4		
7	535910020001		Bezel	1		
8	921100100116		Display	1		**EN1175-2020**
9	920200200014		Pin-code Lock	1		
10	506734010000		Button	1		

03 Wire Harness (Power Steering) (535946033002)

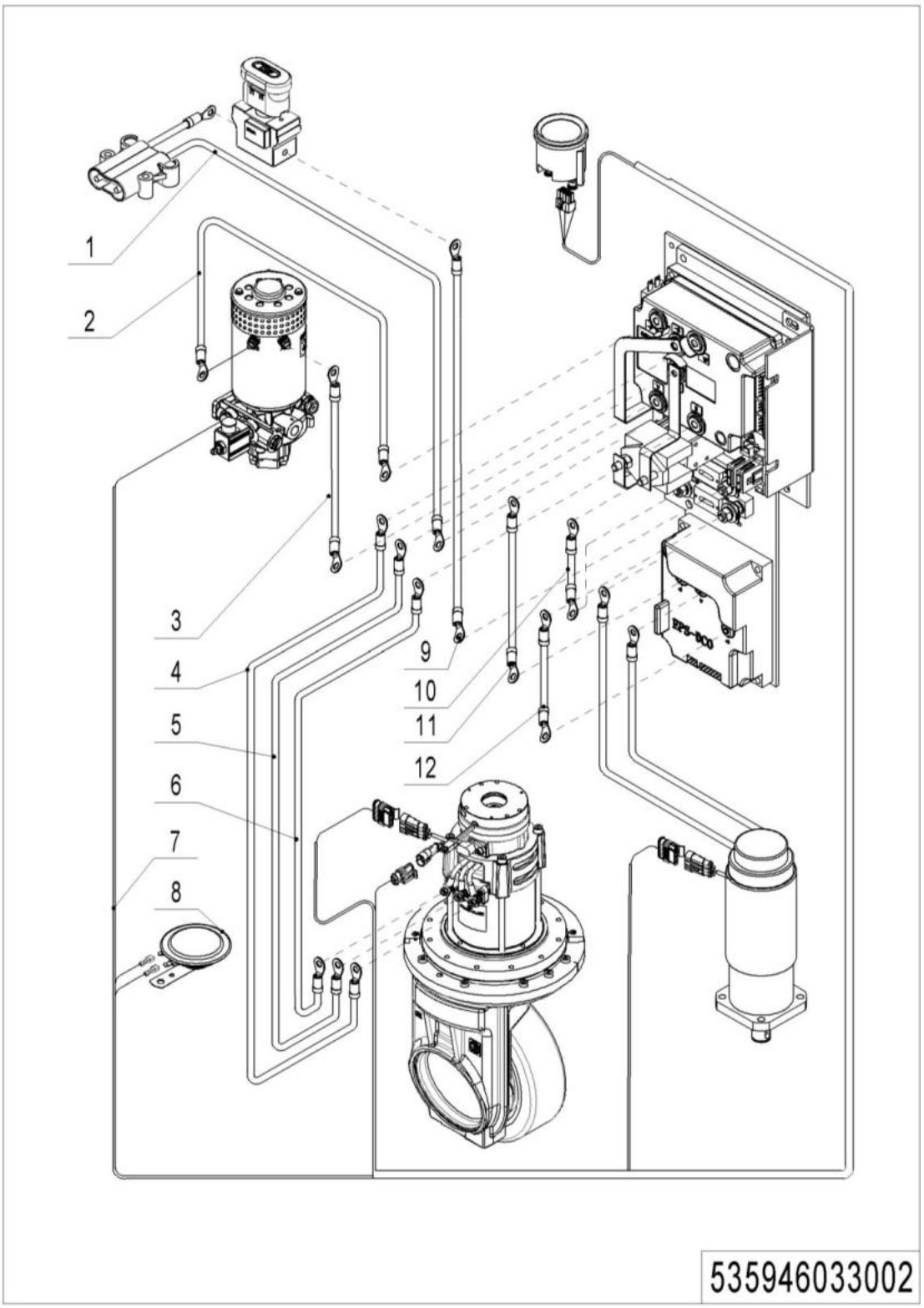

1= Supply as package. 2= Supply with constraints. 3= Phasing-out supply. 4= Supply as assembly. 5= Check other tables.

03 Wire Harness (Power Steering) (535946033002)

No.	Item Code	Mark	Item Description	Qty.	Substitute	Note
1	535933010008		Wire Harness	1		
1	535933010021		Wire Harness	1		**Li battery**
2	535933010007		Cable	1		
3	535933010006		Cable	1		
4	535933010005		Cable	1		
5	535933010004		Cable	1		
6	535933010003		Cable	1		
7	535933010001		Wire Harness	1		
7	535933010020		Wire Harness	1		**Li battery**
8	920500100001		Horn	1		
9	535933010009		Cable	1		
10	535933010014		Cables	1		
11	535933010016		Cables	1		
12	535933010015		Cables	1		

04 Wire Harness (Power Steering,EN1175-2020) (535946033012)

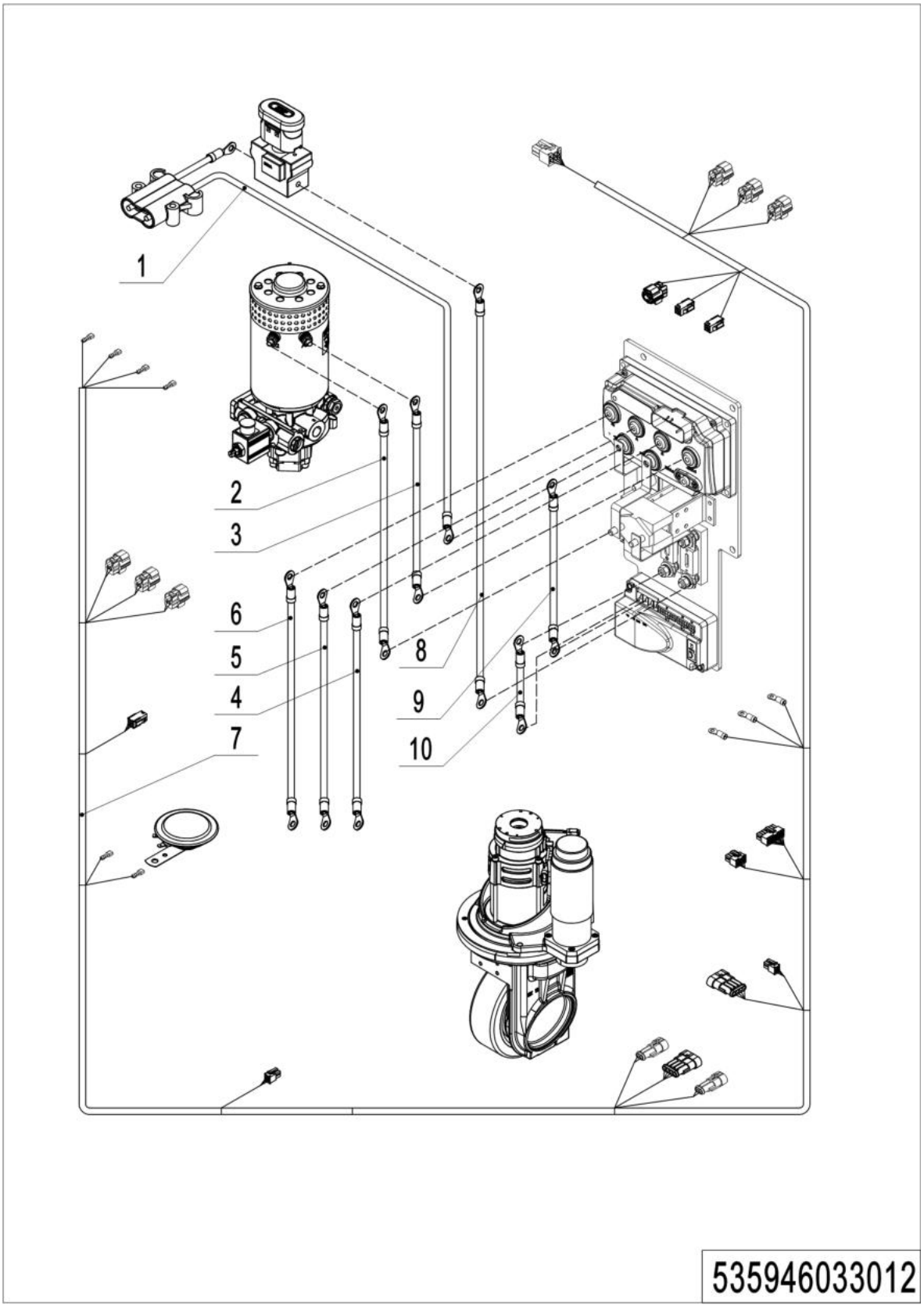

1= Supply as package. 2= Supply with constraints. 3= Phasing-out supply. 4= Supply as assembly. 5= Check other tables.

04 Wire Harness (Power Steering,EN1175-2020) (535946033012)

No.	Item Code	Mark	Item Description	Qty.	Substitute	Note
1	535933010008		Wire Harness	1		
1	535933010021		Wire Harness	1		**Li battery**
2	562633010008		Cable	1		
3	562633010009		Cable	1		
4	562633010004		Cable	1		
5	562633010005		Cable	1		
6	562633010006		Cable	1		
7	535933010038		Wire Harness	1		
8	562633010007		Cable	1		
9	562633010017		Cables	1		
10	562633010014		Cables	1		

05 Electronic Components (Power Steering) (535946033004)

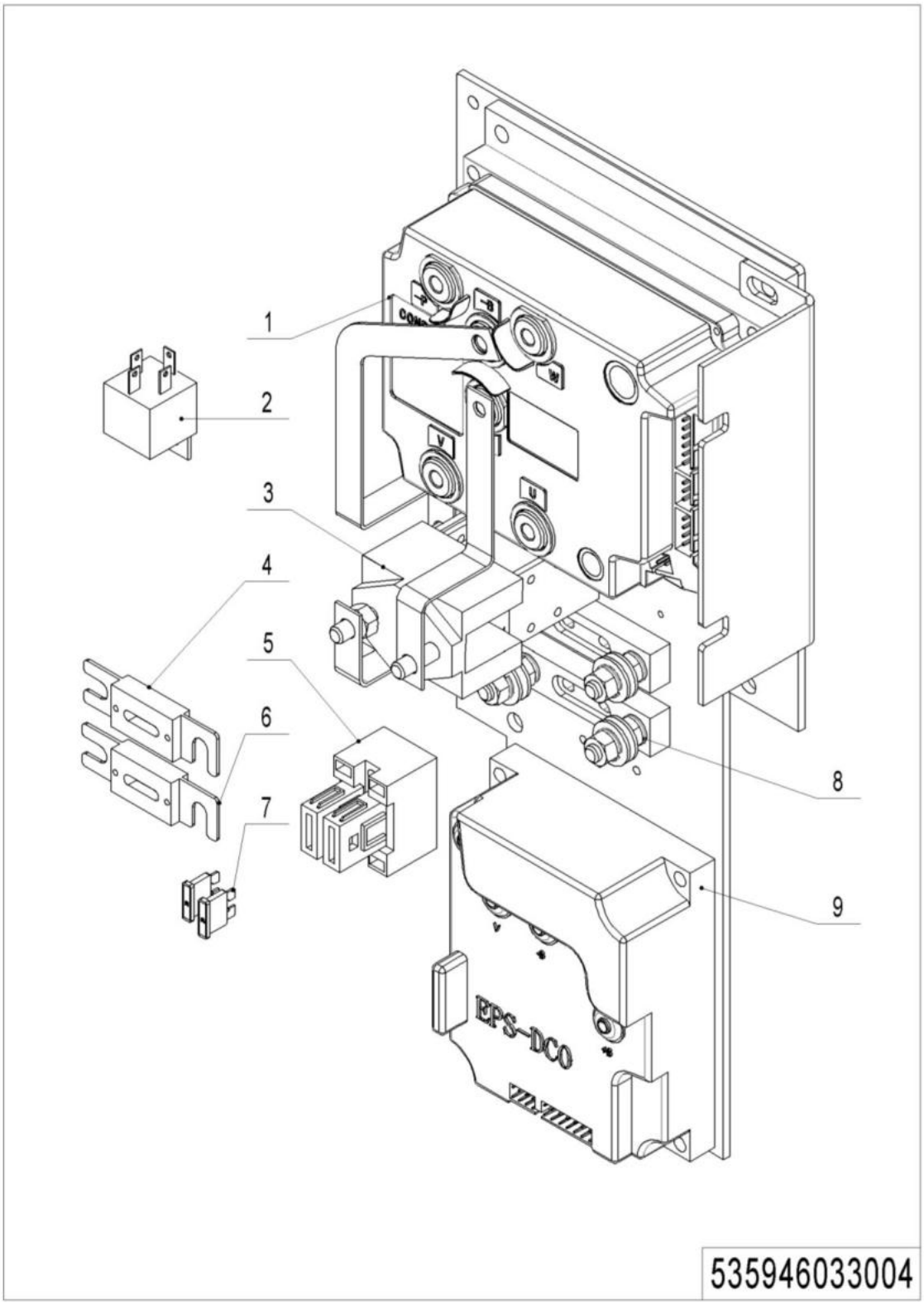

1= Supply as package. 2= Supply with constraints. 3= Phasing-out supply. 4= Supply as assembly. 5= Check other tables.

05 Electronic Components (Power Steering) (535946033004)

No.	Item Code	Mark	Item Description	Qty.	Substitute	Note
1	921400100048		Controller	1		
2	920800100001		Relay	1		
3	920700100002		Contactor	1		
4	920100100013		Fuse	1		
5	920100400005		Fuse Holder	1		
6	920100100001		Fuse	1		
7	920100200002		Fuse	2		
8	920100400002		Fuse Holder	2		
9	921400100030		Controller	1		

06 Electronic Components (EPS,EN1175-2020)(535946033014)

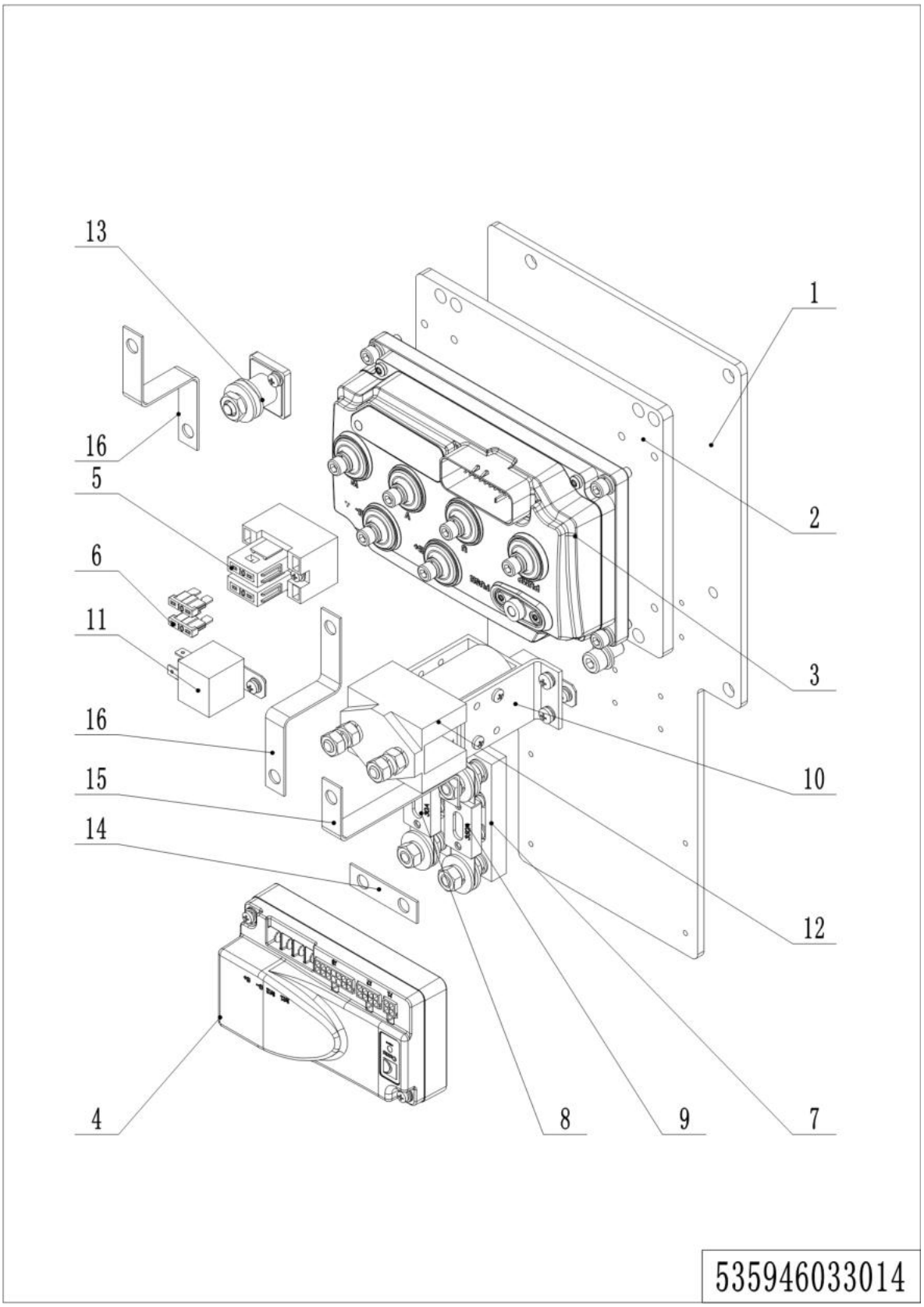

1= Supply as package. 2= Supply with constraints. 3= Phasing-out supply. 4= Supply as assembly. 5= Check other tables.

06 Electronic Components(EPS,EN1175-2020)(535946033014)

No.	Item Code	Mark	Item Description	Qty.	Substitute	Note
1	562633020001		Mounting Plate	1		
2	534733020003		Mounting Plate	1		
3	921400100124		Controller	1		
4	921400100077		Controller	1		
5	920100400005		Fuse Holder	1		
6	920100200002		Fuse	2		
7	920100400002		Fuse Holder	2		
8	920100100001		Fuse	1		
9	920100100013		Fuse	1		
10	921300400004		Fixing Mount	1		
11	920700100002		Contactor	1		
12	920800100001		Relay	1		
13	920100400001		Fuse Holder	1		
14	505633020003		Copper Busbar	1		
15	535933020004		Copper Busbar	1		
16	535933020006		Copper Busbar	2		

07 Charger (532646036501)

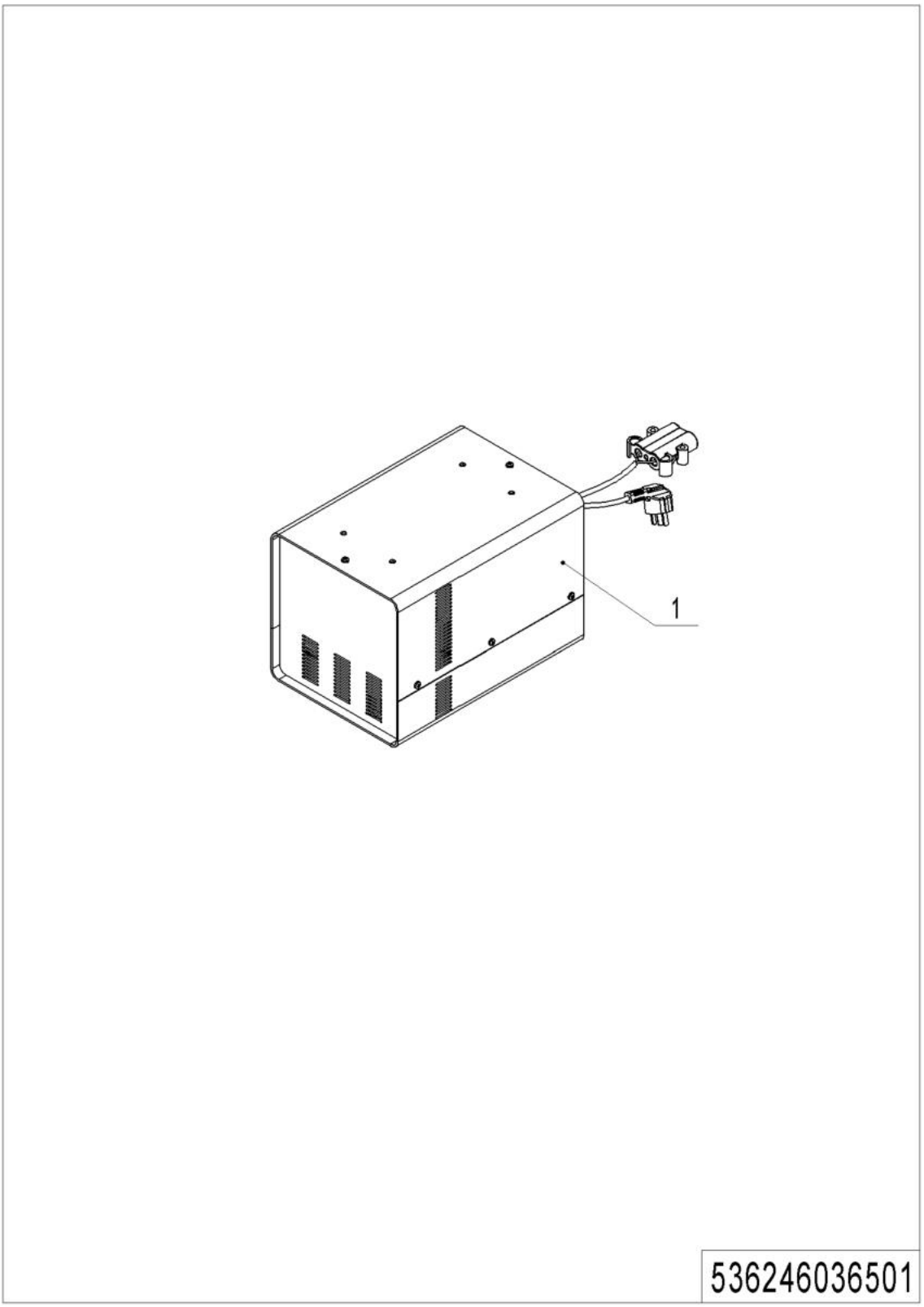

1= Supply as package. 2= Supply with constraints. 3= Phasing-out supply. 4= Supply as assembly. 5= Check other tables.

07 Charger (532646036501)

No.	Item Code	Mark	Item Description	Qty.	Substitute	Note
1	921000200183		Charger24V35A(Aisa-CHN)	1		
1	921000200184		Charger24V35A(Aisa-ENG)	1		
1	921000200185		Charger24V35A(EU)	1		
1	921000200186		Charger24V35A(ENG)	1		
1	921000200187		Charger24V35A(AUS)	1		
1	921000200188		Charger24V35A(USA)	1		
1	921000200365		Charger24V35A(ISR)	1		
1	921000200489		Charger24V35A(BRA)	1		
1	921000200284		Charger24V35A(Aisa-CHN)	1		
1	921000200290		Charger24V35A(Aisa-ENG)	1		
1	921000200294		Charger24V35A(EU)	1		
1	921000200302		Charger24V35A(AUS)	1		
1	921000200298		Charger24V35A(ENG)	1		
1	921000200306		Charger24V35A(USA)	1		
1	921000200366		Charger24V35A(ISR)	1		
1	921000200019		Charger24V45A(Aisa-CHN)	1		
1	921000200020		Charger24V45A(Aisa-ENG)	1		
1	921000200021		Charger24V45A(EU)	1		
1	921000200022		Charger24V45A(AUS)	1		
1	921000200023		Charger24V45A(ENG)	1		
1	921000200024		Charger24V45A(USA)	1		

08 Charger(Li) (536246036502)

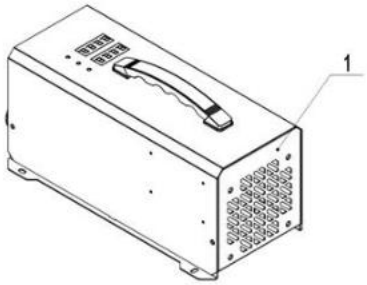

535946036501

1= Supply as package. 2= Supply with constraints. 3= Phasing-out supply. 4= Supply as assembly. 5= Check other tables.

08 Charger(Li) (536246036502)

No.	Item Code	Mark	Item Description	Qty.	Substitute	Note
1	921000200533		Charger24V80A(EU)	1		
1	921000200534		Charger24V80A(ENG)	1		
1	921000200535		Charger24V80A(AUS)	1		
1	921000200536		Charger24V80A(ISR)	1		
1	921000200537		Charger24V80A(ARG)	1		
1	921000200538		Charger24V80A(ZA)	1		
1	921000200539		Charger24V8A(US)	1		
1	921000200524		Charger24V60A(EU)	1		
1	921000200525		Charger24V60A(ENG)	1		
1	921000200526		Charger24V60A(AUS)	1		
1	921000200527		Charger24V60A((ISR)	1		
1	921000200528		Charger24V60A(ARG)	1		
1	921000200529		Charger24V60A(ZA)	1		
1	921000200530		Charger24V60A(US)	1		
1	921000200631		Charger24V60A(THA)	1		
1	921000200664		Charger24V80A(BIGZA)	1		
1	921000200663		Charger24V60A(BIGZA)	1		
1	921000200649		Charger24V60A(Asia)	1		
1	921000200652		Charger24V80A(Asia-CHN)	1		
1	921000200532		Charger24V80A(Asia-EN)	1		

09 Traction Battery (536246037001)

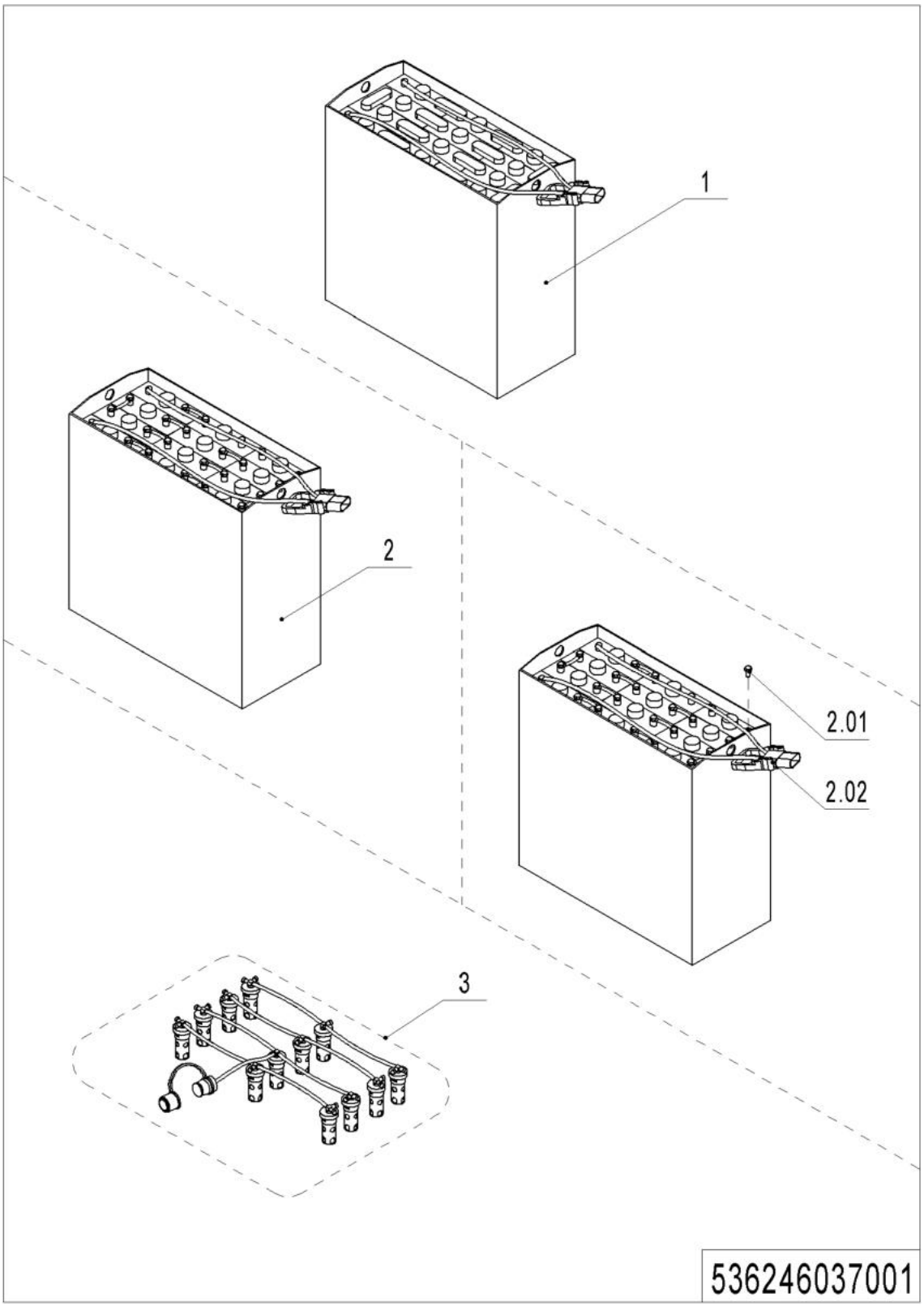

1= Supply as package. 2= Supply with constraints. 3= Phasing-out supply. 4= Supply as assembly. 5= Check other tables.

09 Traction Battery (536246037001)

No.	Item Code	Mark	Item Description	Qty.	Substitute	Note
1	532637010002		Battery24V350Ah(welded)	1		
1	532937010001		Battery24V270Ah(welded)	1		
2	532637010003		Battery24V350Ah	1		
2	532937010002		Battery24V270Ah	1		
2.01	920400100007		Connector	1		**For all battery**
2.02	505698520000		Bolt	24		**For bolted battery**
3	535937110000		Water refilling system	1		**Optional**

10 Li Battery (536246037002)

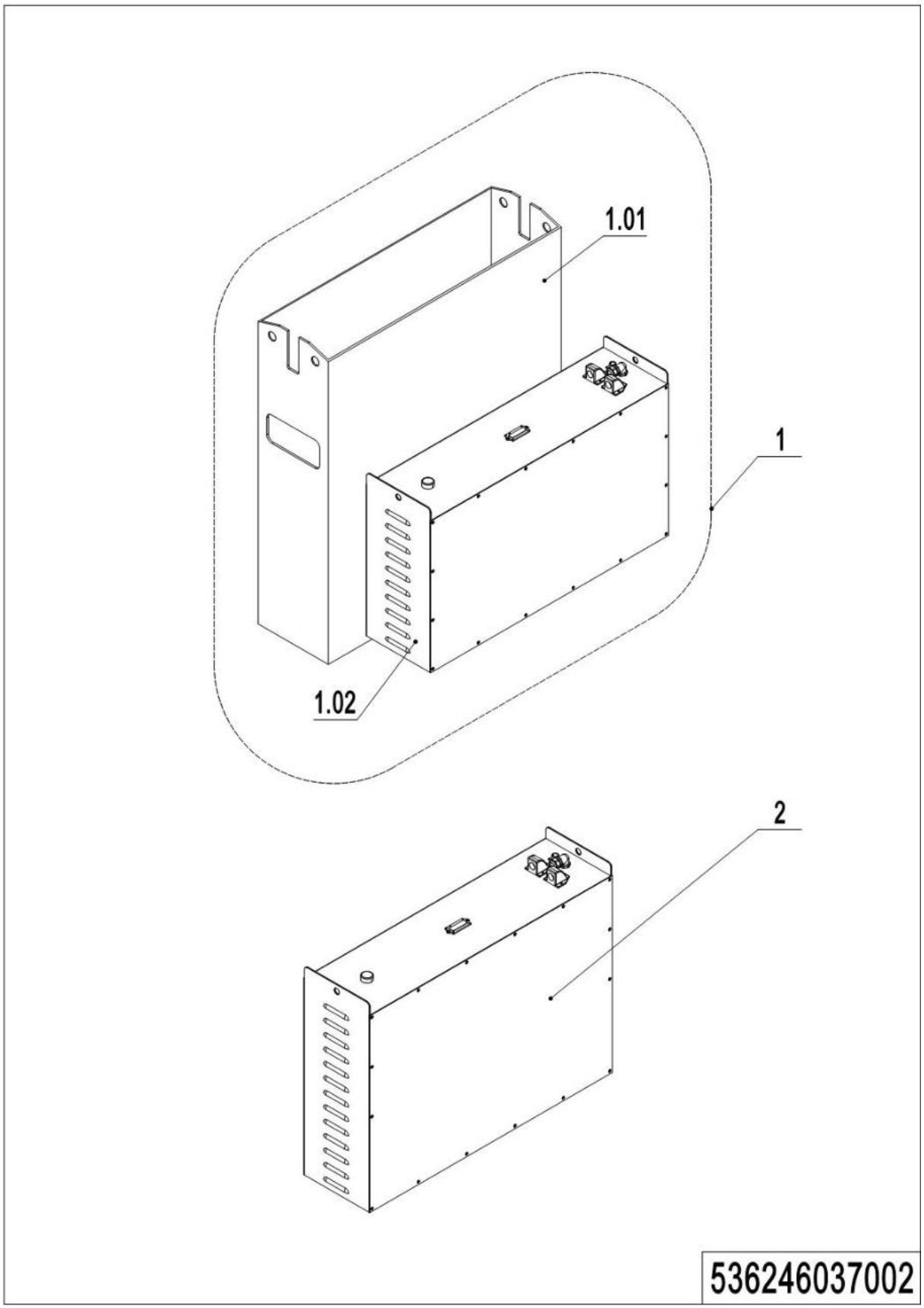

1= Supply as package. 2= Supply with constraints. 3= Phasing-out supply. 4= Supply as assembly. 5= Check other tables.

10 Li Battery (536546037002)

No.	Item Code	Mark	Item Description	Qty.	Substitute	Note
1	506937010003		Li Battery(200Ah)	1		Fudeer
1	536237010003		Li Battery(250Ah)	1		Fudeer
1.01	536237010002		Battery Box	1		
1.02	920600100021		Li Battery24V200Ah	1		
1.02	920600100039		Li Battery24V250Ah	1		
2	920600100182		Li Battery24V200Ah	1		

Chapter 7: Special Parts

01 Load Backrest (532646040501)

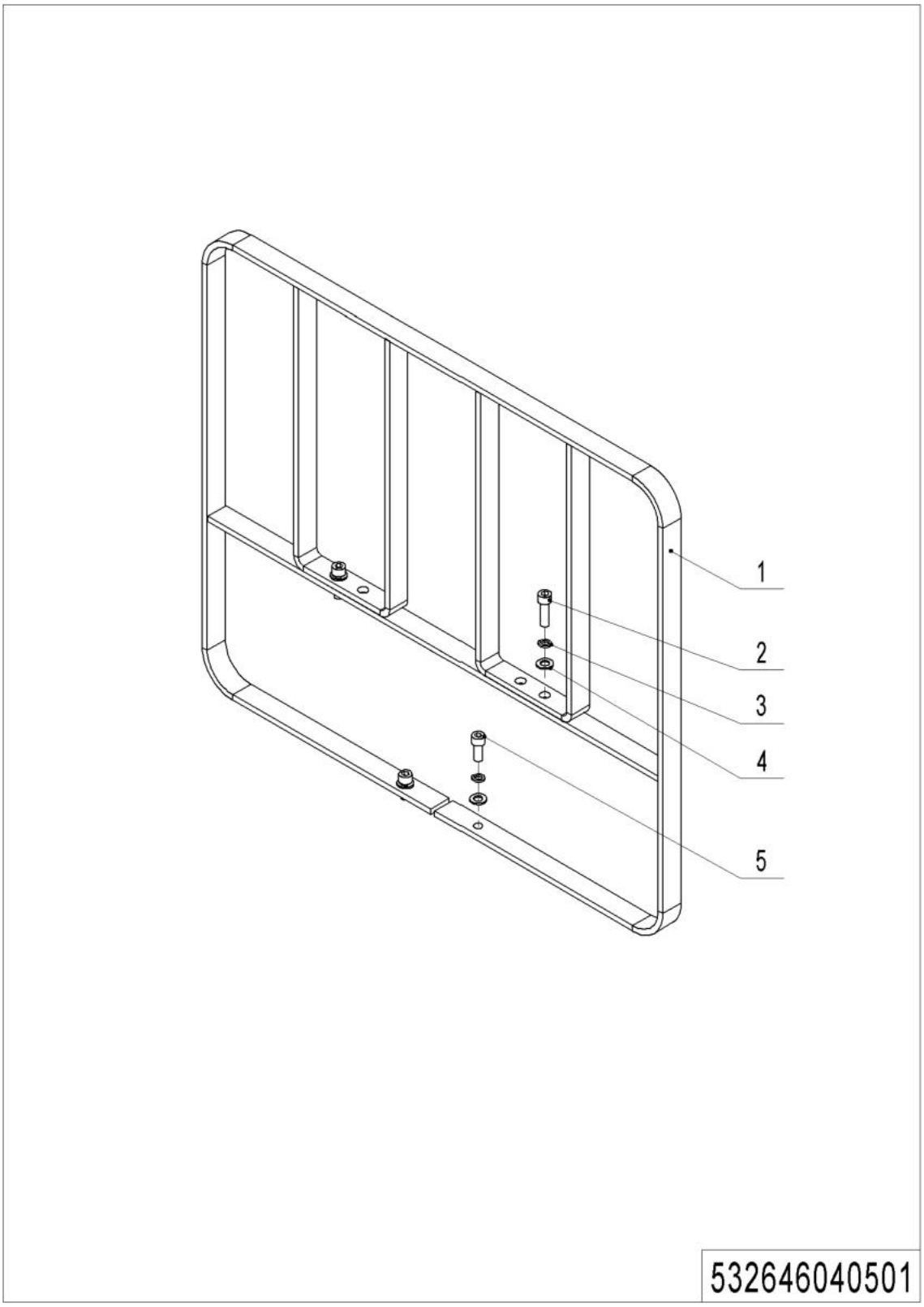

1= Supply as package. 2= Supply with constraints. 3= Phasing-out supply. 4= Supply as assembly. 5= Check other tables.

01 Load Backrest (532646040501)

No.	Item Code	Mark	Item Description	Qty.	Substitute	Note
1	532640510001	2	Load Backrest	1		
2	910200200076	1	Screw	2		
3	910400500007	1	Spring Washer	4		
4	910400100007	1	Flat Washer	4		
5	910200200078	1	Screw	2		

Chapter 8: Others

01 Label and Decal (EU) (536246047001)

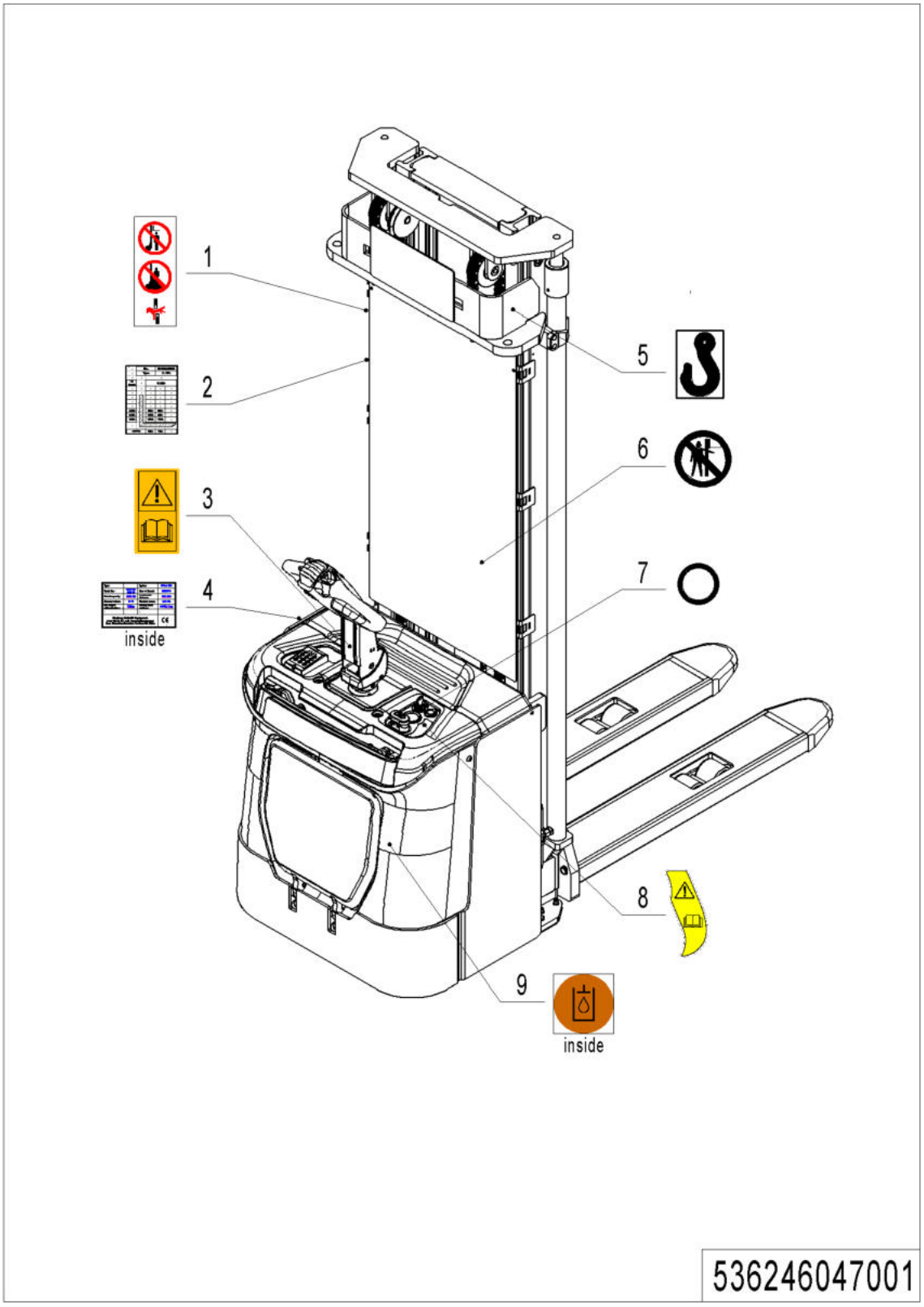

1= Supply as package. 2= Supply with constraints. 3= Phasing-out supply. 4= Supply as assembly. 5= Check other tables.

01 Label and Decal (EU) (536246047001)

No.	Item Code	Mark	Item Description	Qty.	Substitute	Note
1	941200100004		Label	2		
2	536247520006		Load Capacity Diagram	1		
3	941200300002		Label	1		
4	536247520007		Identification Plat	1		
5	941200300001		Label	2		
6	941200100006		Label	1		
7	941200400013		Label	1		
8	941200300018		Label	1		
9	941200300003		Label	1		

Appendix

01 Electrical Circuit Diagram

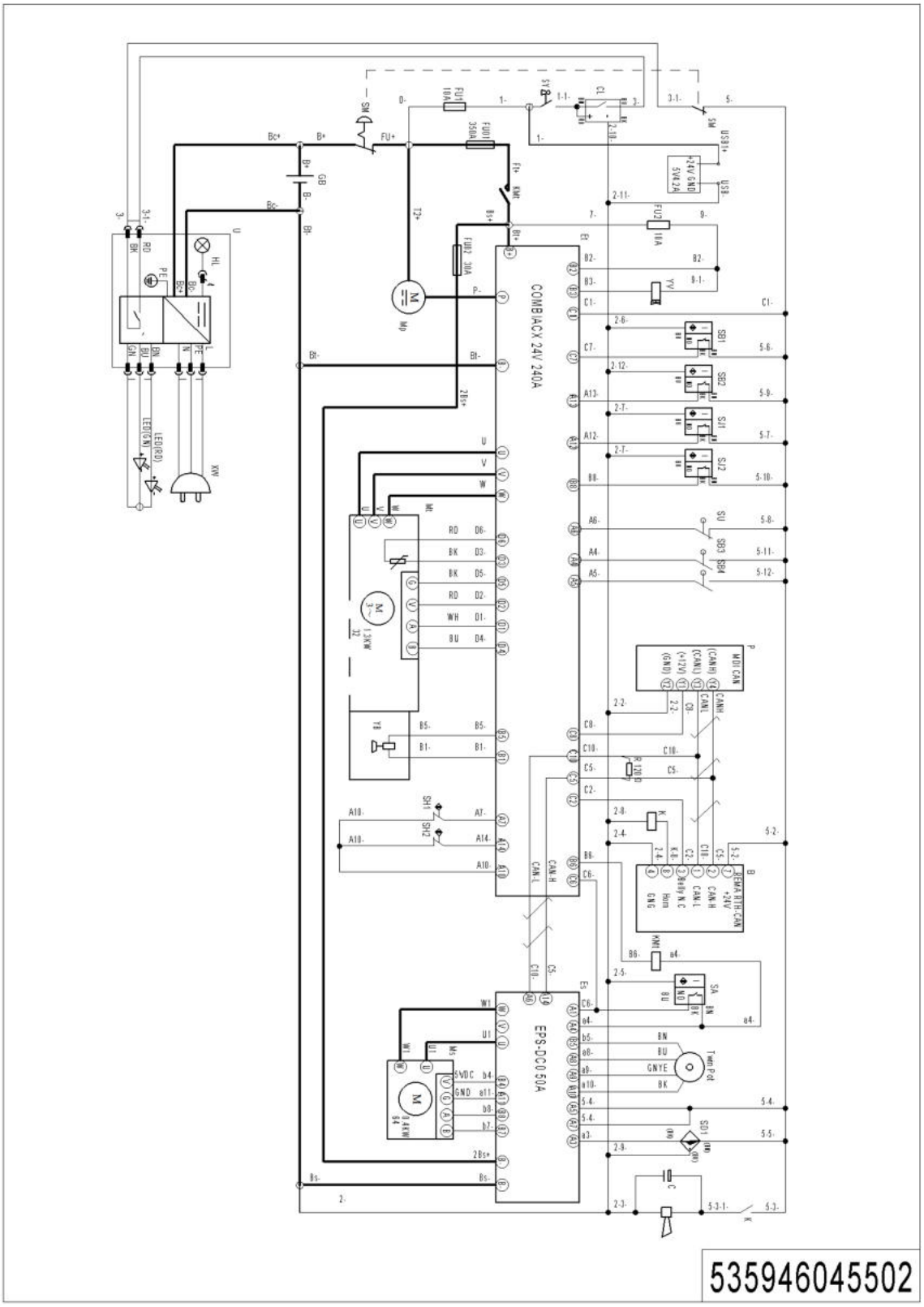

1= Supply as package. 2= Supply with constraints. 3= Phasing-out supply. 4= Supply as assembly. 5= Check other tables.

02 Electrical Circuit Diagram(EN1175-2020)

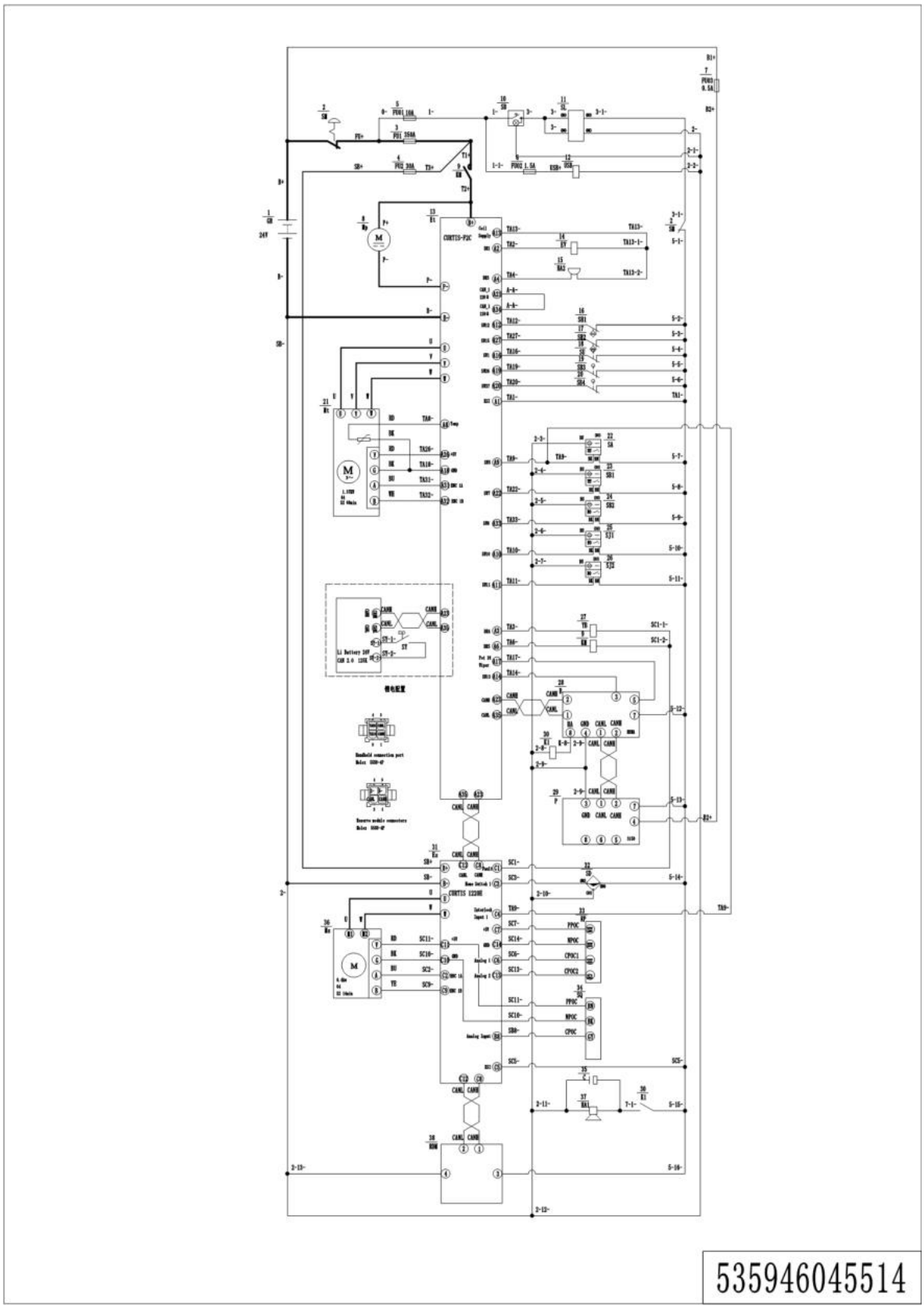

535946045514

03 Hydraulic Circuit Diagram

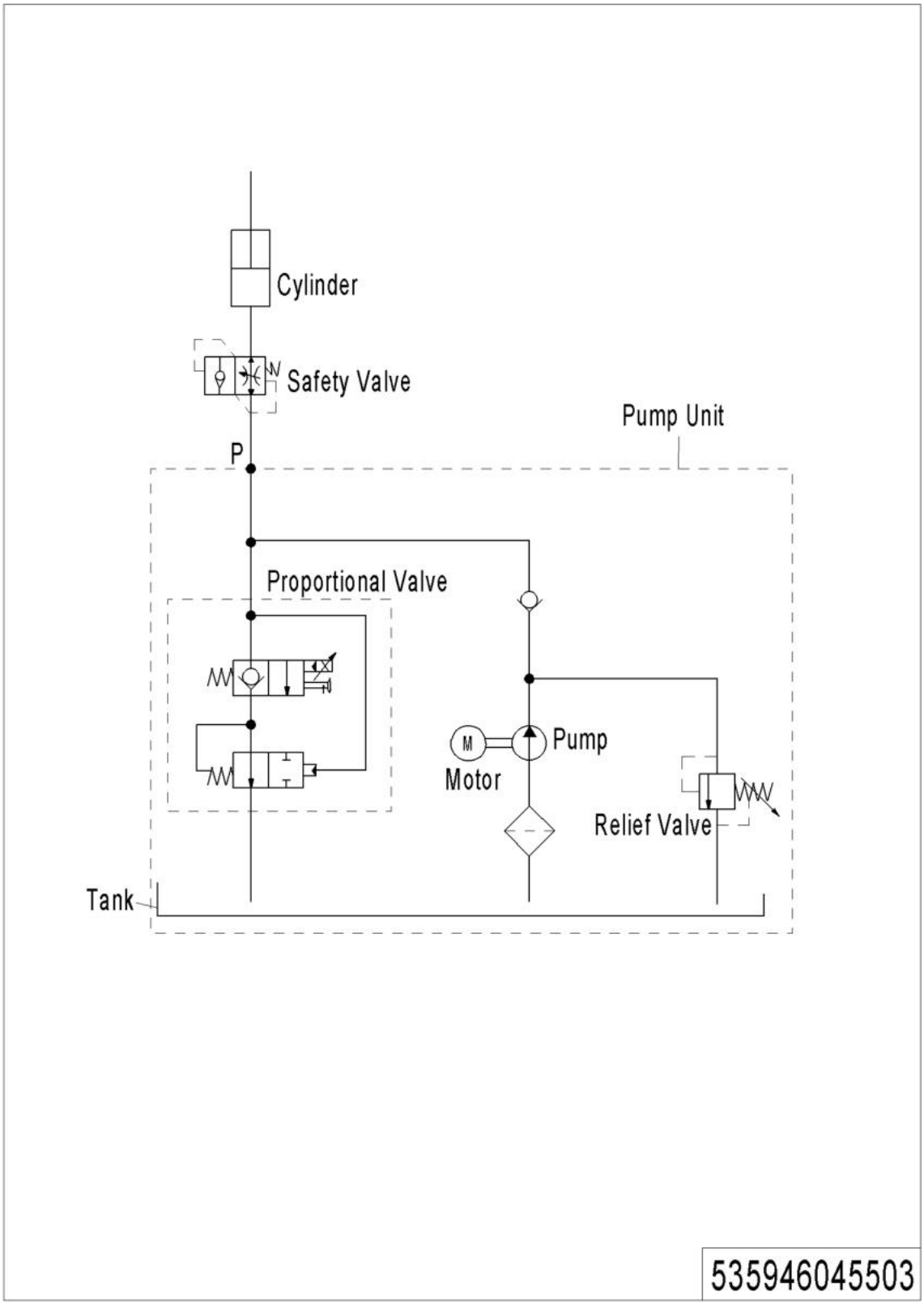

04 Consumable Parts List

No.	Item Code	Item Description	Qty.	Chapter/ Section/ Number
1	910700200041	Bearing	2	Chapter 1/01/2
2	505733510001	Proximity Switch	1	Chapter 1/01/24
3	535998510002	Sensor	1	Chapter 1/02/4.02
4	535998520004	Safety Element	1	Chapter 1/02/4.05
5	534798520026	Carbon Brush	1	Chapter 2/02/2
6	940500200008	Bushing	2	Chapter 3/02/15
7	534721510003	Roller	6	Chapter 3/02/29
8	910700200017	Bearing	12	Chapter 3/02/29.02
9	940200300022	Compound Roller	28	Chapter 3/05/1Chapter 4/01/38Chapter 4/02/36
9	940200300022	Compound Roller		Chapter 4/03/45Chapter 4/04/44
10	535098510003	Seal Kit	2	Chapter 4/01/7.01
11	920200300001	Microswitch	4	Chapter 4/01/17Chapter 4/02/20Chapter 4/03/7
11	920200300001	Microswitch		Chapter 4/04/40
12	535933510014	Switch	1	Chapter 4/01/24
13	535933510015	Switch	1	Chapter 4/01/24
14	535933510017	Switch	1	Chapter 4/01/24
15	535933510005	Switch	3	Chapter 4/01/26Chapter 4/02/31Chapter 4/03/33
15	535933510005	Switch		Chapter 4/04/44
16	535098510002	Seal Kit	2	Chapter 4/02/12.01
17	535933510013	Switch	1	Chapter 4/02/27
18	535933510014	Switch	1	Chapter 4/02/27
19	535933510015	Switch	1	Chapter 4/02/27
20	535933510017	Switch	1	Chapter 4/02/27
21	534798510003	Seal Kit	1	Chapter 4/02/47.01
22	535098510001	Seal Kit	2	Chapter 4/03/17.01
23	535098510000	Seal Kit	2	Chapter 4/04/16.01
24	535933510013	Switch	1	Chapter 4/04/38
25	535933510014	Switch	1	Chapter 4/04/38
26	535933510015	Switch	1	Chapter 4/04/38
27	534798510001	Seal Kit	1	Chapter 4/04/58.01

1= Supply as package. 2= Supply with constraints. 3= Phasing-out supply. 4= Supply as assembly. 5= Check other tables.

28	506733510002	Proximity Switch	1	Chapter 5/01/12
29	940400100001	Air Spring	1	Chapter 5/01/13
30	940400100045	Air Spring	1	Chapter 5/01/13
31	940500200002	Bushing	2	Chapter 5/01/17
32	532998510001	Wheel	4	Chapter 5/04/1
33	940300300009	WheelΦ84x70	4	Chapter 5/04/1.01
34	910700200019	Bearing	8	Chapter 5/04/1.02
35	910700400004	Bearing	2	Chapter 5/05/4.03
36	940300300020	WheelΦ150x54	1	Chapter 5/05/4.07
37	910700200019	Bearing	2	Chapter 5/05/4.08
38	920200100012	Emergency Button	1	Chapter 6/01/3.02 Chapter 6/02/3.02
39	920100100013	Fuse	1	Chapter 6/05/4 Chapter 6/06/9
40	920100100001	Fuse	1	Chapter 6/05/6 Chapter6/06/8
41	920100200002	Fuse	2	Chapter 6/05/7 Chapter 6/06/6

1= Supply as package. 2= Supply with constraints. 3= Phasing-out supply. 4= Supply as assembly. 5= Check other tables.