Print Number: Print Date:

NOBLELIFT

Scan QR Code for More

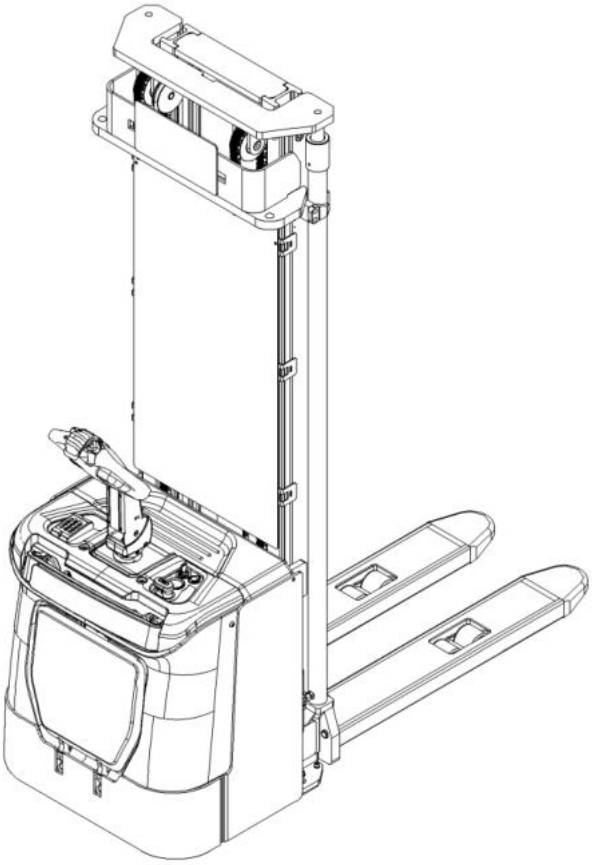

Electric Pallet Stacker PS12N

PARTS MANUAL

535646020101

Version V03

Truck Identification Number From:

Parts Manual

PS12N-PM03EN

Please order parts from authorized dealers of Noblelift Intelligent Equipment Co., LTD.

In order to avoid wrong delivery, all the orders for spare parts should specify the following items:

- Truck model, identification number and manufacture year.
- Orders for spare parts of mast, hydraulic transmission unit, steering axle, motor, etc. shall indicate the manufacture number of these parts.
- Codes for Noblelift spare parts are shown in the table of parts manual. Please also pay attention to the description of supply status, order quantity, etc. (check the number listed in "Mark" column of the parts manual).

"Mark" Column:

The unmarked indicates the parts are in short supply cycle.

Number 1: supply as package. Indicating these that parts are small parts and seal parts, which are supplied in package unit and in short supply cycle.

Number 2: supply with constraints. Indicating that these spare parts are not in stock and will be prepared for production after receiving the order from customers, which are in long supply cycle.

Number 3: phasing-out supply. Indicating that these parts will be replaced by new parts due to technical improvements and the current stock will not be available when these parts run out. Please check the description of technical improvements notice.

Number 4: supply as assembly. Indicating that these parts are assembly parts defined by manufacture process, which cannot be supplied as a single part.

Number 5: check other tables.

This parts manual is the property of Noblelift and can be shared under the confidential agreement only, Noblelift has the right to claim for compensation of any unauthorized use. Copy without permission is not allowed. Figures in the manual are not limited by the original design. Noblelift Intelligent Equipment Co., LTD reserves the right to improve the products for continuous technology progress.

Table of Contents

Chapter 1: Drive System 5
01 Manual Steering Drive Unit (535946013501) 5
02 Drive Unit 1.4kW (535946013502) 7
03 Power Steering Drive Unit (535946013503) 11
04 Power steering Drive Unit (EN1175-2020)(535946013506) 13
04 Power steering Drive Unit (EN1175-2020)(535946013506) Continuation 15
05 Drive and Steering Unit 1.4kW (535946013504) 17
Chapter 2: Hydraulic System 19
01 Hydraulic Pipeline (Two-stage mast) (535646024001) 19
02 Hydraulic Pipeline (Triple mast full free lift) (535646024002) 21
03 Pump Unit (HPI,1.5KW) (534446023501) 23
04 Pump Unit (HPI,3.2KW)(534746023501) 25
05 Pump Unit (VIBO,3.2KW)(534746023502) 27
Chapter 3: Truck Frame 29
01 Chassis (535646021501) 29
01 Chassis (535646021501) Continuation 31
02 Protective Arm (535946017501) 33
03 Platform Assembly (535946018001) 35
04 Platform (EPS,EN1175-2020) (535946018002) 37
05 Fork Carriage (534446038001) 39
Chapter 4: Mast System 41
01 Two-stage mast standard lift (535646044001) 41
01 Two-stage mast standard lift (535646044001) Continuation 1 43
02 Two-stage mast full free lift (535646043501) 45
02 Two-stage mast full free lift (535646043501) Continuation 1 47
02 Two-stage mast full free lift (535646043501) Continuation 2 49
03 Triple Mast Full Free Lift (535646044501) 51
03 Triple Mast Full Free Lift (535646044501) Continuation 1 53
03 Triple Mast Full Free Lift (535646044501) Continuation 2 55
Chapter 5: Steering System, Braking System, Wheels 57
01 Tiller Unit (535946011001) 57
02 Control Handle (535946011002) 59
03 Control Handle (EN1175-2020)(535946011010) 61
04 Load Wheel (532946017001) 63
05 Caster (534746016501) 65
Chapter 6: Electrical Parts 67
01 Display Assembly (535946010001) 67
02 Display Assembly(EN1175-2020) (535946010003) 69
03 Wire Harness (535946033001) 71
04 Wire Harness (EN175-2020)(535946033011) 73
05 Wire Harness (Power Steering) (535946033002) 75
06 Wire Harness (Power Steering,EN1175-2020) (535946033012) 77

07 Controller Assembly (535946033003)....79
08 Electronic Components (EN1175-2020)(535946033013)....81
09 Controller Assembly (Power Steering) (535946033004)....83
10 Electronic Components (EPS,EN1175-2020)(535946033014)....85
11 Charger (535646036501)....87
11 Charger (535646036501) Continuation....89
12 Traction Battery (534446037001)....91
Chapter 7: Special Parts....93
01 Load Backrest (532646040501)....93
Chapter 8: Others....95
01 Label and Decal (EU) (535646047001)....95
Appendix....97
01 Electrical Circuit Diagram....97
02 Electrical Circuit Diagram (Power Steering)....98
03 Hydraulic Circuit Diagram....100
04 Consumable Parts List....102

Chapter 1: Drive System

01 Manual Steering Drive Unit (535946013501)

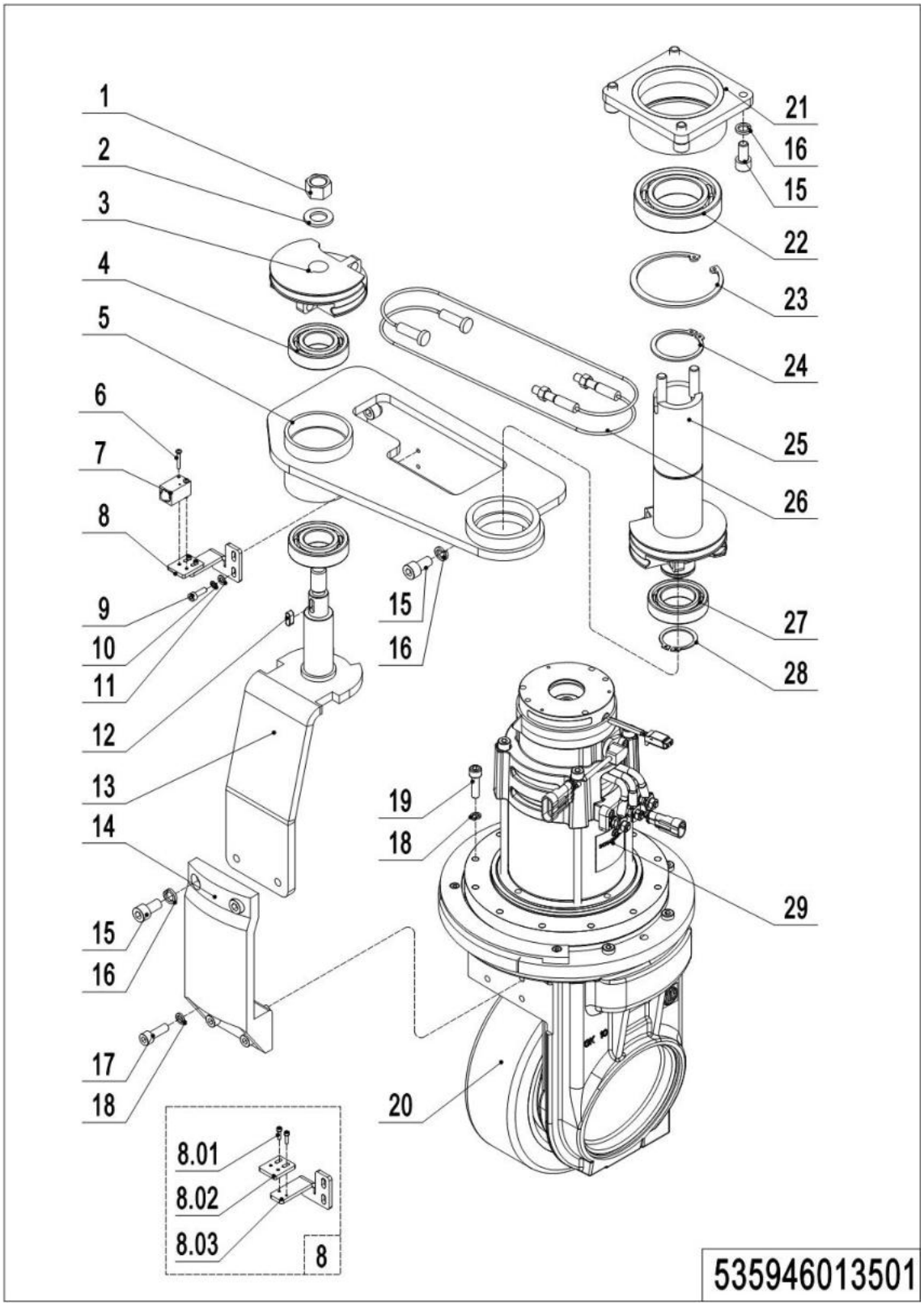

01 Manual Steering Drive Unit (535946013501)

No.	Item Code	Mark	Item Description	Qty.	Substitute	Note
1	910300100010	1	Nut	1		
2	910400100010	1	Flat Washer	1		
3	535931220002		Dial	1		
4	910700200021		Bearing	2		
5	535931210002	2	Bracket	1		
6	910200500015	1	Screw	2		
7	505633510000		Proximity Switch	1		
8	535998510022		Mounting Plate Kits	1		
8.01	910200200003		Screw	2		
8.02	537813520017		Mounting Plate	1		
8.03	535931220004		Mounting Plate	1		
9	910200200023	1	Screw	6		
10	910400500004	1	Spring Washer	6		
11	910400100004	1	Flat Washer	4		
12	910600800011		Flat Key	1		
13	535931210001	2	Plate	1		
14	535931220001		Bracket	1		
15	910200200075	1	Screw	10		
16	910400500007	1	Spring Washer	10		
17	910200200058	1	Screw	4		
18	910400500006	1	Spring Washer	17		
19	910200200060	1	Screw	9		
20	940300400005		WheelΦ230x70	1		
21	910700200025		Bearing	2		
22	910401400024	1	Circlip	2		
23	535931210004	2	Fixing Base	1		
24	910401300024	1	Circlip	1		
25	535931210005	2	handle Spindle	1		
26	535931210003		Wirerope	2		
27	910700200007		Bearing	1		

1= Supply as package. 2= Supply with constraints. 3= Phasing-out supply. 4= Supply as assembly. 5= Check other tables.

01 Manual Steering Drive Unit (535946013501) Continuation

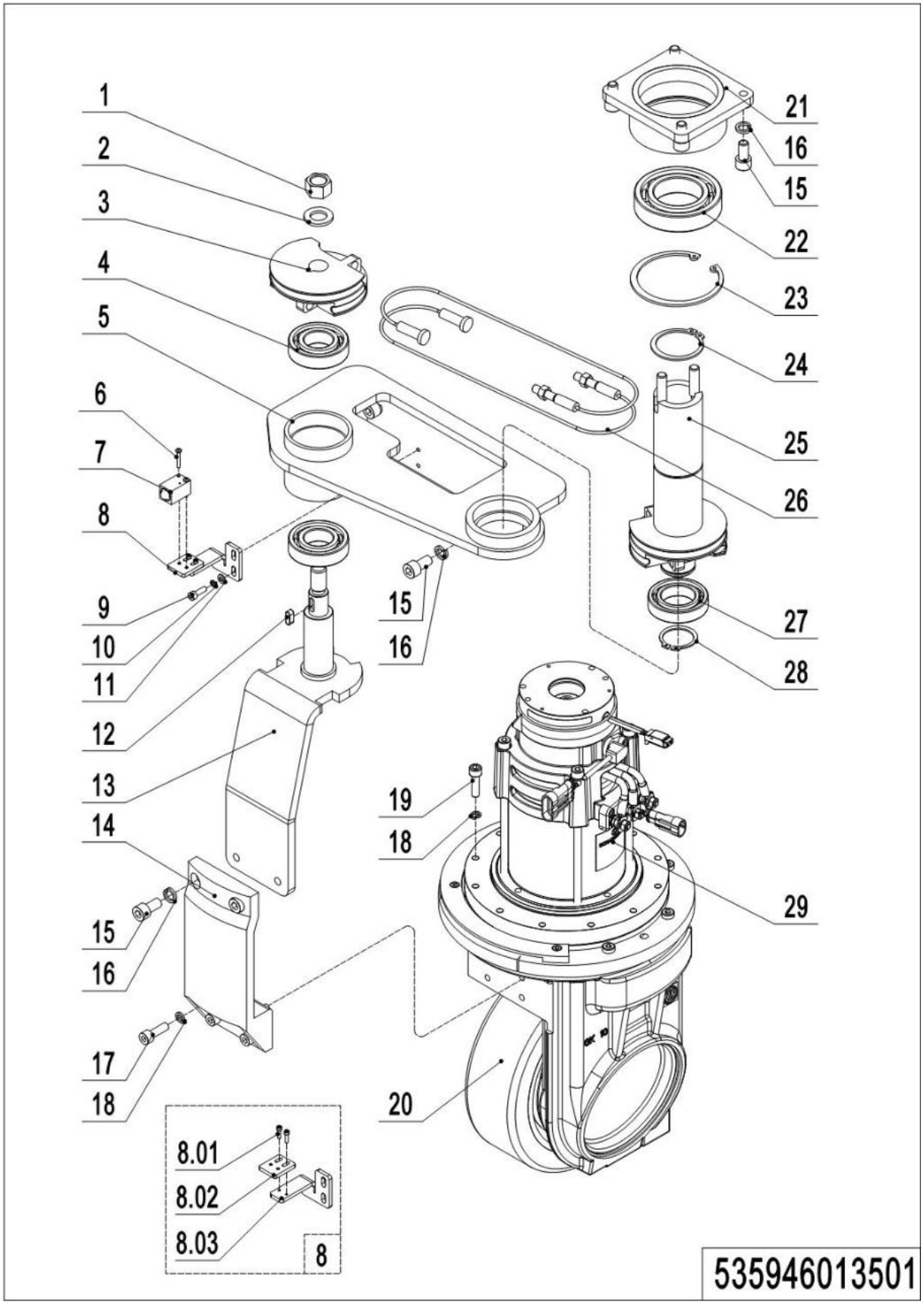

01 Manual Steering Drive Unit (535946013501) Continuation

No.	Item Code	Mark	Item Description	Qty.	Substitute	Note
28	910401300018	1	Circlip	1		
29	940900400004	5	Drive Unit	1		**See 535946013502**

02 Drive Unit 1.4kW (535946013502)

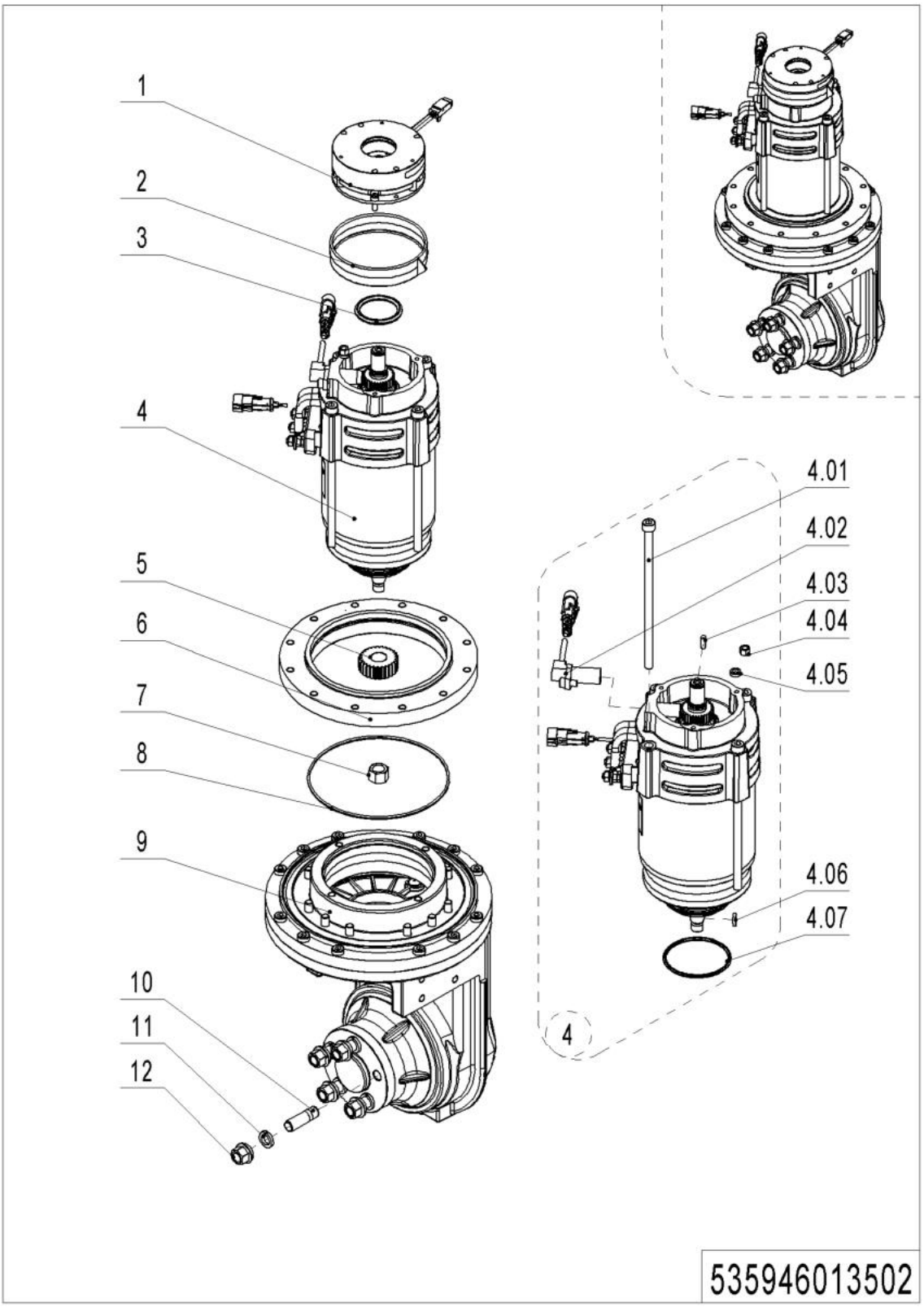

02 Drive Unit 1.4kW (535946013502)

No.	Item Code	Mark	Item Description	Qty.	Substitute	Note
1	535998510001		Brake	1		
2	535998520001		Division Plate	1		
3	535998520000		Locating Ring	1		
4	535998510003		Motor	1		
4.01	535998520002		Screw	4		
4.02	535998510002		Sensor	1		
4.03	535998520005		Feather Key	1		
4.04	535998520003		Nut	1		
4.05	535998520004		Safety Element	1		
4.06	535998520006		Key	1		
4.07	535998520007		O-Ring	1		
5	535998520014		Gear	1		
6	535998520010		Plate	1		
7	535998520008		Nut	1		
8	535998520009		O-Ring	1		
9	535998510004		Gearbox Assembly	1		
10	535998520011		Bolt	5		
11	535998520012		Washer	5		
12	535998520013		Nut	5		

1= Supply as package. 2= Supply with constraints. 3= Phasing-out supply. 4= Supply as assembly. 5= Check other tables.

03 Power Steering Drive Unit (535946013503)

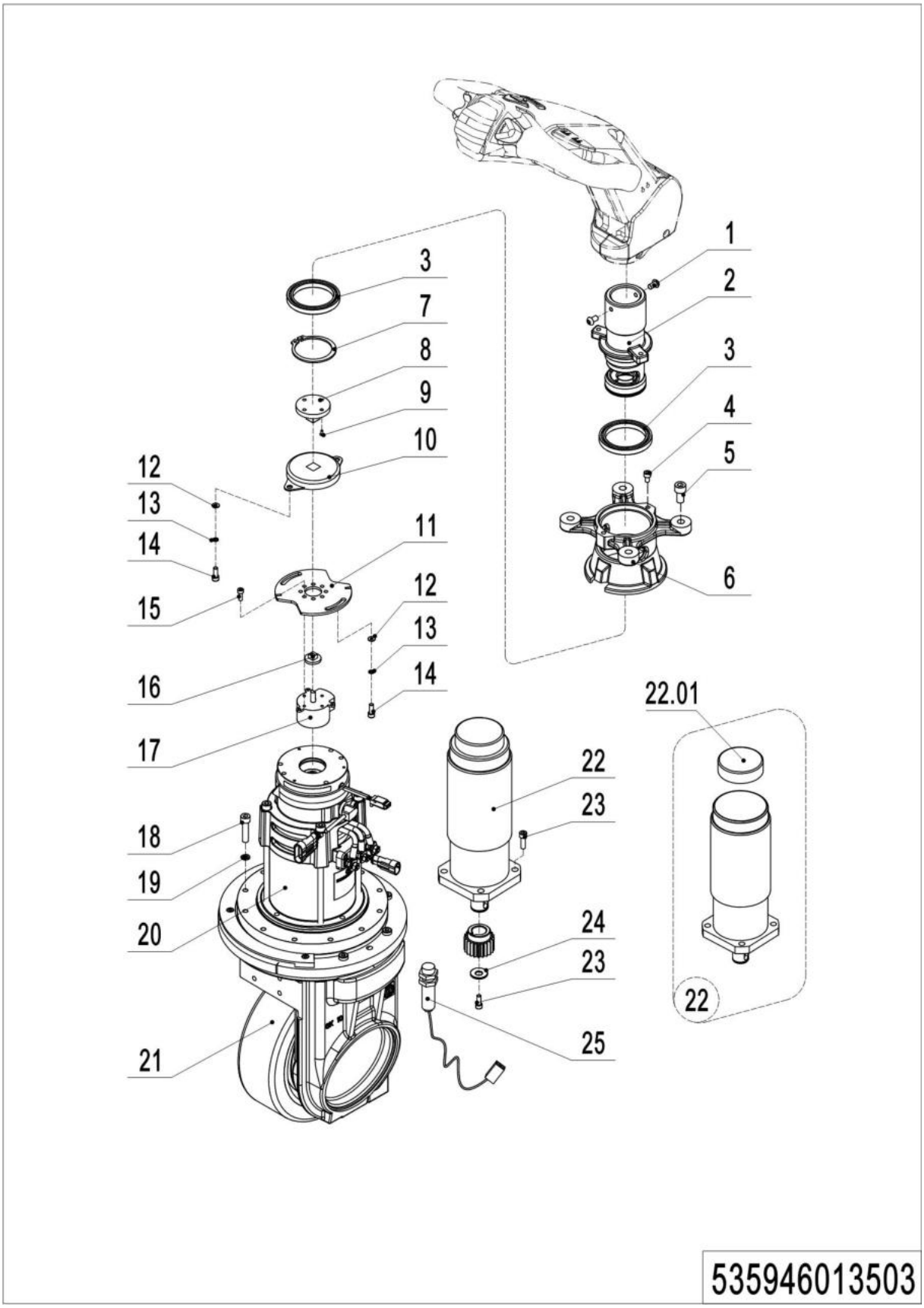

03 Power Steering Drive Unit (535946013503)

No.	Item Code	Mark	Item Description	Qty.	Substitute	Note
1	910200300016	1	Screw	2		
2	535931520001	2	Bracket	1		
3	910700200041		Bearing	2		
4	910200200032	1	Screw	3		
5	910200200075	1	Screw	4		
6	505631520002		Fixing Base	1		
7	910401300024	1	Circlip	1		
8	505631520005		Link Block	1		
9	910200200014	1	Screw	1		
10	940801200005		Rotary Damper	1		
11	535931520002		Mounting Plate	1		
12	910400100004	1	Flat Washer	4		
13	910400500004	1	Spring Washer	4		
14	910200200021	1	Screw	4		
15	910200200014	1	Screw	4		
16	505931520002		Link Block	1		
17	921800200008		Potentiometer	1		
18	910200200060	1	Screw	10		
19	910400500006	1	Spring Washer	10		**See 535946013504**
20	940900500008	5	Steering Unit	1		
21	940300400005		WheelΦ230x70	1		
22	920900100069		Motor	1		
22.01	921800200016		Encoder	1		
23	910200200057	1	Screw	5		
24	506713520001		Retaining Ring	1		
25	505733510001		Proximity Switch	1		

1= Supply as package. 2= Supply with constraints. 3= Phasing-out supply. 4= Supply as assembly. 5= Check other tables.

04 Power steering Drive Unit (EN1175-2020)(535946013506)

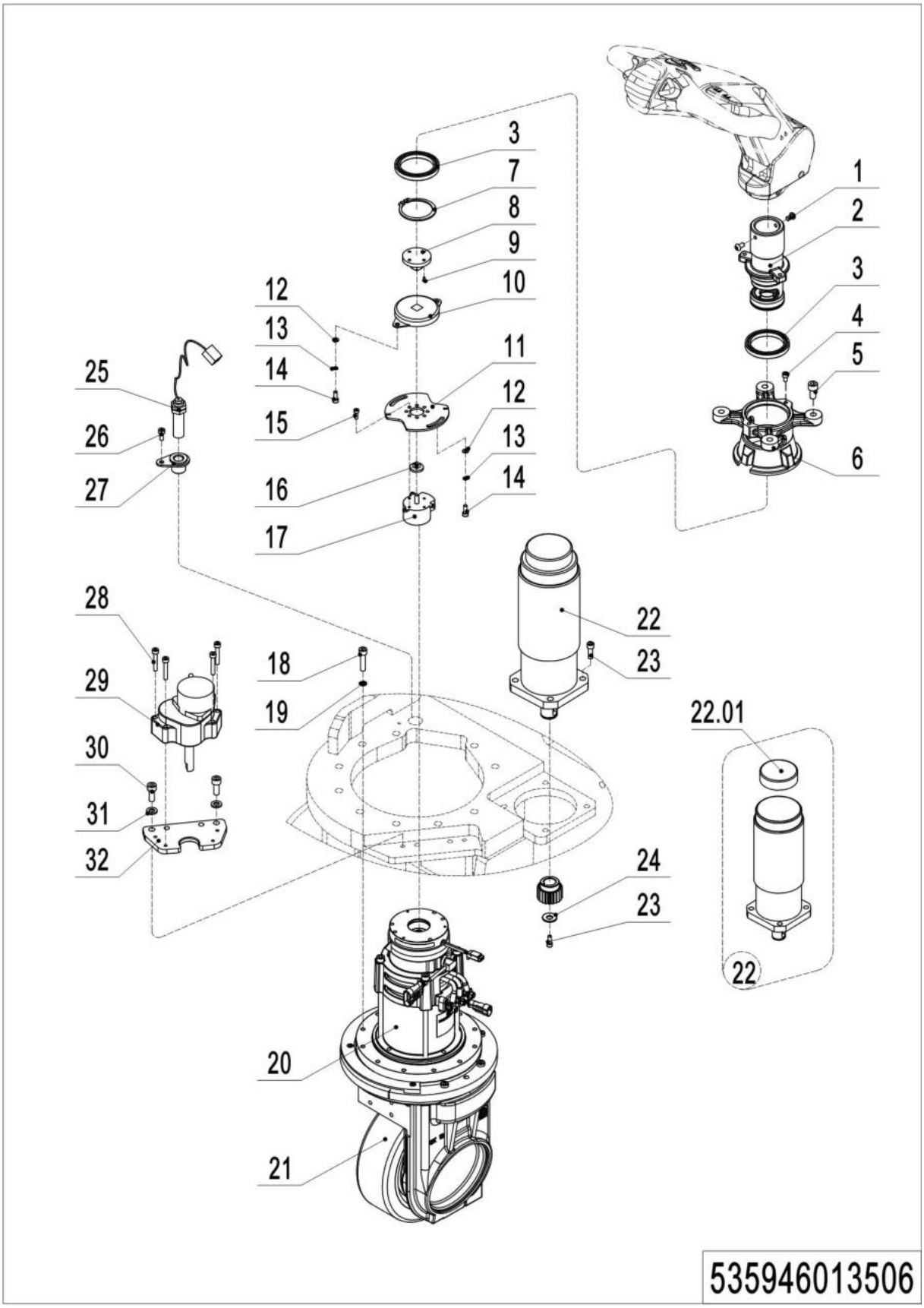

1= Supply as package. 2= Supply with constraints. 3= Phasing-out supply. 4= Supply as assembly. 5= Check other tables.

04 Power steering Drive Unit(EN1175-2020)(535946013506)

No.	Item Code	Mark	Item Description	Qty.	Substitute	Note
1	910200300016	1	Screw	2		
2	535931520001	2	Bracket	1		
3	910700200041		Bearing	2		
4	910200200032	1	Screw	3		
5	910200200075	1	Screw	4		
6	505631520002		Fixing Base	1		
7	910401300024	1	Circlip	1		
8	505631520005		Link Block	1		
9	910200200014	1	Screw	1		
10	940801200005		Rotary Damper	1		
11	535931520002		Mounting Plate	1		
12	910400100004	1	Flat Washer	4		
13	910400500004	1	Spring Washer	4		
14	910200200021	1	Screw	4		
15	910200200014	1	Screw	4		
16	505931520002		Link Block	1		
17	921800100037		Potentiometer	1		
18	910200200060	1	Screw	10		
19	910400500006	1	Spring Washer	10		
20	940900500008	5	Steering Unit	1		**See 535946013504**
21	940300400005		WheelΦ230x70	1		
22	920900100069		Motor	1		
22.01	921800200016		Encoder	1		
23	910200200057	1	Screw	5		
24	506713520001		Retaining Ring	1		
25	562633510001		Proximity Switch	1		
26	910200200013		Screw	1		
27	533213510005		Bushing	1		
28	910200200017		Screw	4		
29	921800100059		Sensor	1		

1= Supply as package. 2= Supply with constraints. 3= Phasing-out supply. 4= Supply as assembly. 5= Check other tables.

04 Power steering Drive Unit (EN1175-2020)(535946013506) Continuation

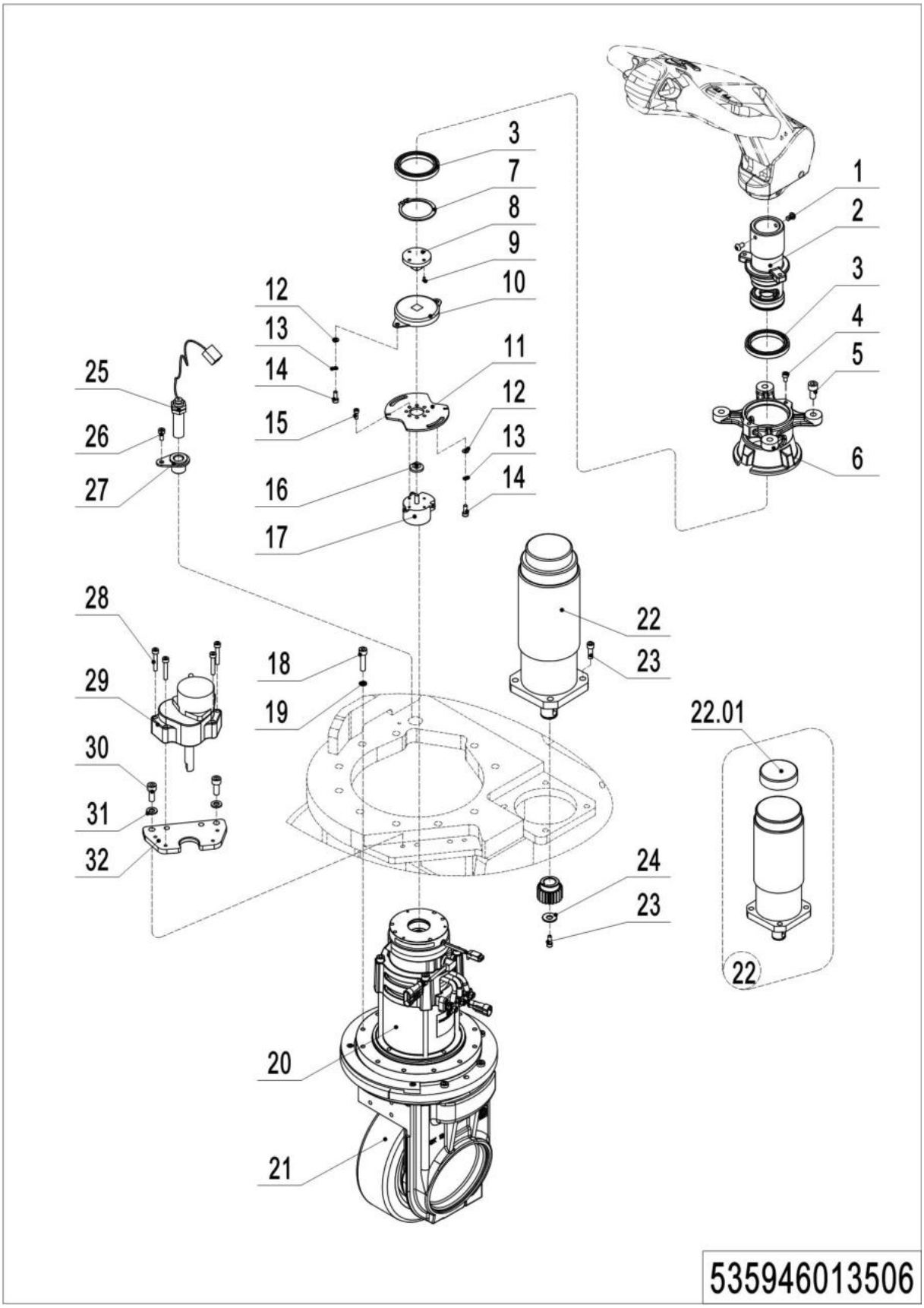

04 Power steering Drive Unit(EN1175-2020)(535946013506) Continuation

No.	Item Code	Mark	Item Description	Qty.	Substitute	Note
30	910200200035		Screw	2		
31	910400100005		Flat Washer	2		
32	537813520019		Mounting Plate	1		

05 Drive and Steering Unit 1.4kW (535946013504)

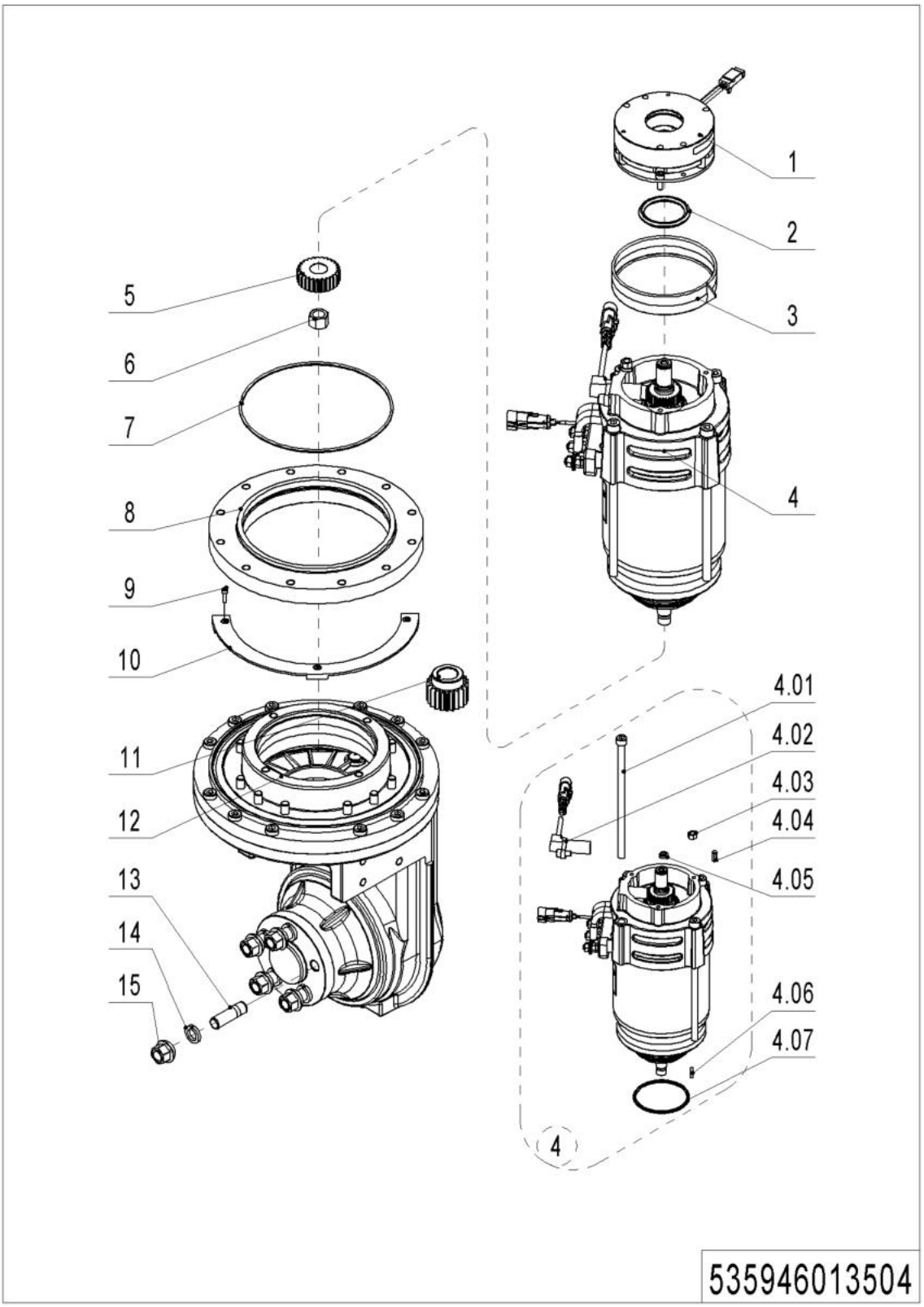

1= Supply as package. 2= Supply with constraints. 3= Phasing-out supply. 4= Supply as assembly. 5= Check other tables.

05 Drive and Steering Unit 1.4kW (535946013504)

No.	Item Code	Mark	Item Description	Qty.	Substitute	Note
1	535998510001		Brake	1		
2	535998520000		Locating Ring	1		
3	535998520001		Division Plate	1		
4	535998510003		Motor	1		
4.01	535998520002		Screw	4		
4.02	535998510002		Sensor	1		
4.03	535998520003		Nut	1		
4.04	535998520005		Feather Key	1		
4.05	535998520004		Safety Element	1		
4.06	535998520006		Key	1		
4.07	535998520007		O-Ring	1		
5	535998520014		Gear	1		
6	535998520008		Nut	1		
7	535998520009		O-Ring	1		
8	535998520010		Plate	1		
9	535998520015		Screw	3		
10	535998520016		Limiter	1		
11	535998520017		Gear	1		
12	535998510005		Gearbox Assembly	1		
13	535998520011		Bolt	5		
14	535998520012		Washer	5		
15	535998520013		Nut	5		

Chapter 2: Hydraulic System

01 Hydraulic Pipeline (Two-stage mast) (535646024001)

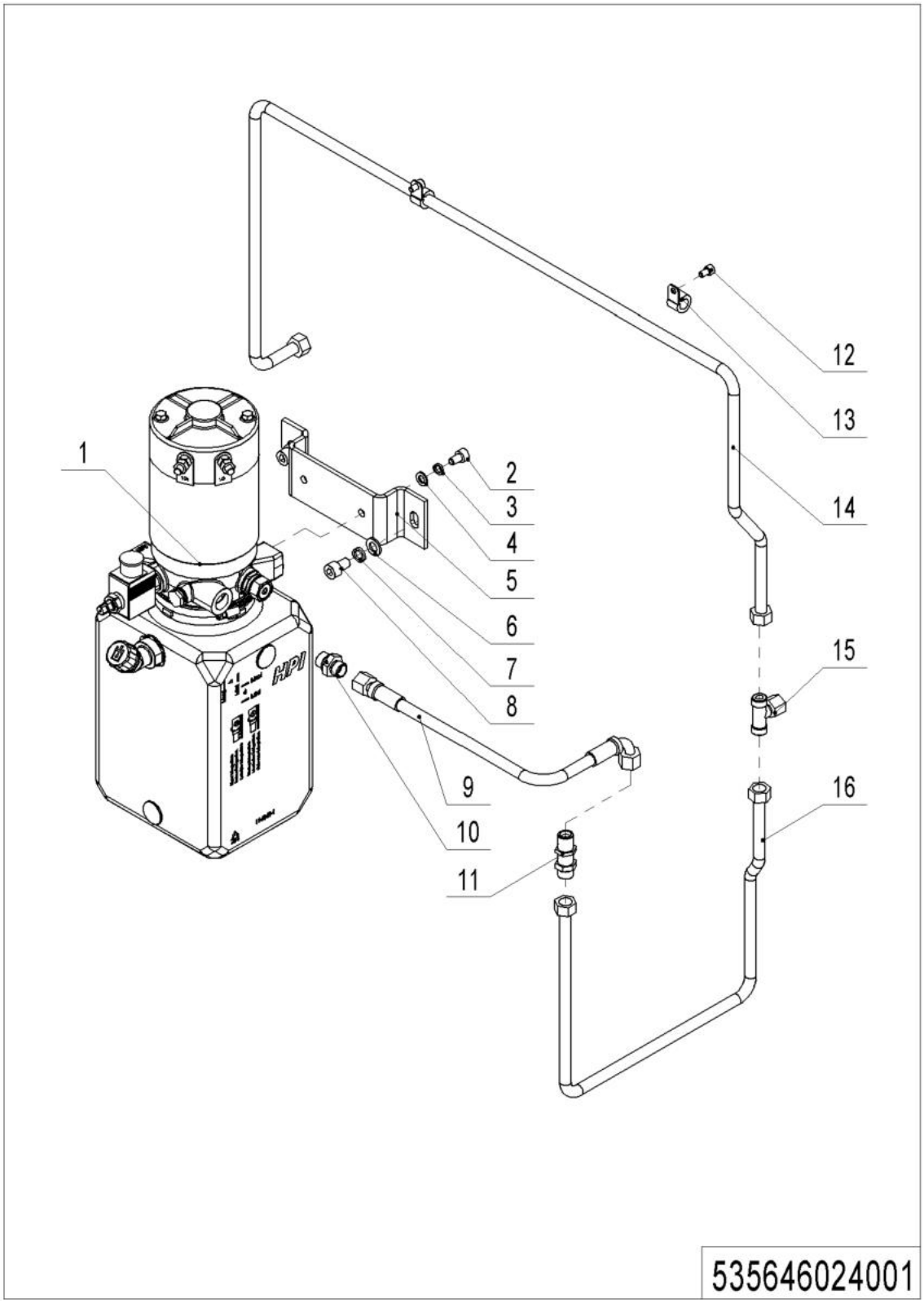

1= Supply as package. 2= Supply with constraints. 3= Phasing-out supply. 4= Supply as assembly. 5= Check other tables.

01 Hydraulic Pipeline (Two-stage mast) (535646024001)

No.	Item Code	Mark	Item Description	Qty.	Substitute	Note
1	950900100014	5	Pump Unit	1		**See 534446023501**
2	910200200057	1	Screw	2		
3	910400500006	1	Spring Washer	2		
4	910400100006	1	Flat Washer	2		
5	534424020000		Mounting Plate	1		
6	910400100007	1	Flat Washer	2		
7	910400500007	1	Spring Washer	2		
8	910200200074	1	Screw	2		
9	201027520002		Hose	1		
10	950400300007		Joint	1		
11	950400500001		Joint	1		
12	910200200032	1	Screw	2		
13	951000100001		Hose Clamp	2		
14	535624010002		Steel Tube	1		
15	950400900002		Joint	1		
16	535624010001		Steel Tube	1		

02 Hydraulic Pipeline (Triple mast full free lift) (535646024002)

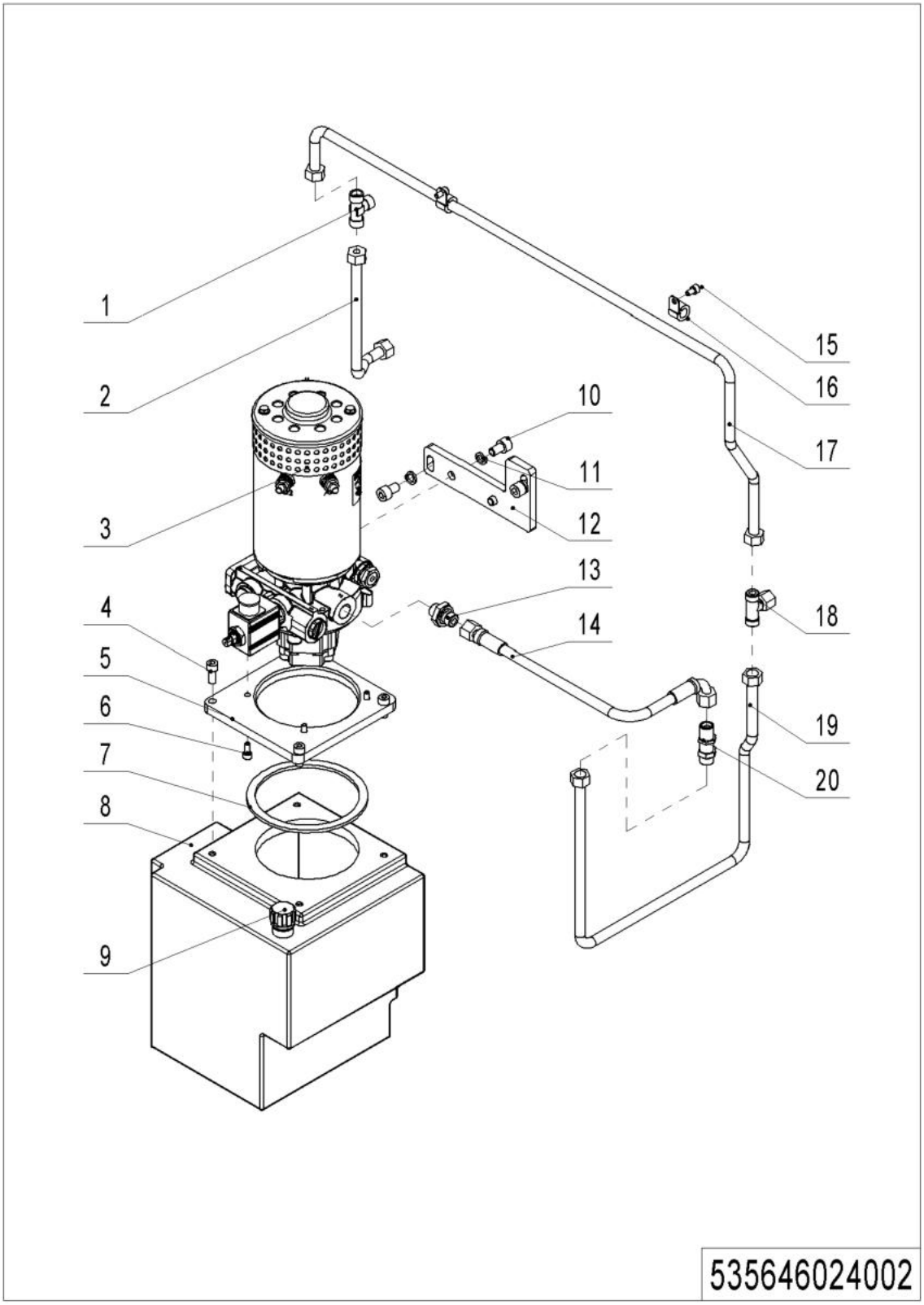

1= Supply as package. 2= Supply with constraints. 3= Phasing-out supply. 4= Supply as assembly. 5= Check other tables.

02 Hydraulic Pipeline (Triple mast full free lift) (535646024002)

No.	Item Code	Mark	Item Description	Qty.	Substitute	Note
1	950400700002		Joint	1		
2	533545020026		Steel Tube	1		
3	950900100015	5	Pump Unit	1		**See 534746023501**
3	950900100098	5	Pump Unit	1		**See 535946023502**
4	910200200057	1	Screw	4		
5	535919020005		Mounting Plate	1		
6	910200200034	1	Screw	4		
7	535919020003		Sealing Gasket	1		
8	535919020001		Tank	1		
8	535919020004		Tank	1		EPS,EN1175-2020
9	951100200001		Screw Plug	1		
10	910200200074	1	Screw	4		
11	910400500007	1	Spring Washer	4		
12	535924020001		Mounting Plate	1		
13	950400300005		Joint	1		
14	201027520002		Hose	1		
15	910200200032	1	Screw	2		
16	951000100001		Hose Clamp	2		
17	535924010002		Steel Tube	1		
18	950400900002		Joint	1		
19	535624010001		Steel Tube	1		
20	950400500001		Joint	1		

03 Pump Unit (HPI,1.5KW) (534446023501)

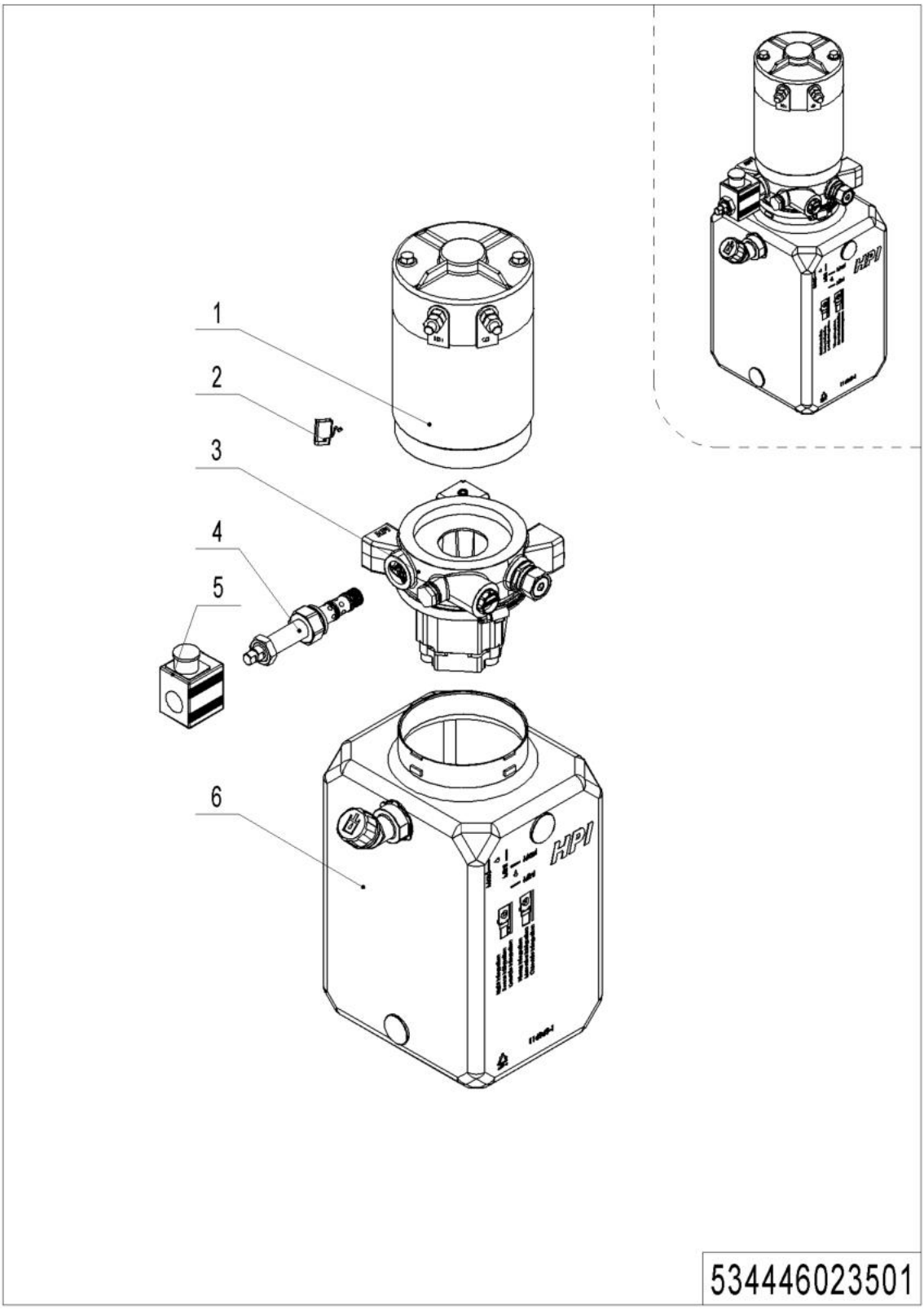

1= Supply as package. 2= Supply with constraints. 3= Phasing-out supply. 4= Supply as assembly. 5= Check other tables.

03 Pump Unit (HPI,1.5KW) (534446023501)

No.	Item Code	Mark	Item Description	Qty.	Substitute	Note
--	950900100014		Pump Unit	1		**HPI,1.5KW**
1	534498510003	2	Motor	1		
2	534498510008	2	Carbon Brush	1		
3	534498510004	2	Valve Block	1		
4	534498510005	2	Magnetic Valve	1		**Provide with coil**
5	534498510006	2	Coil	1		**Provide with valve**
6	534498510007	2	Tank	1		

04 Pump Unit (HPI,3.2KW)(534746023501)

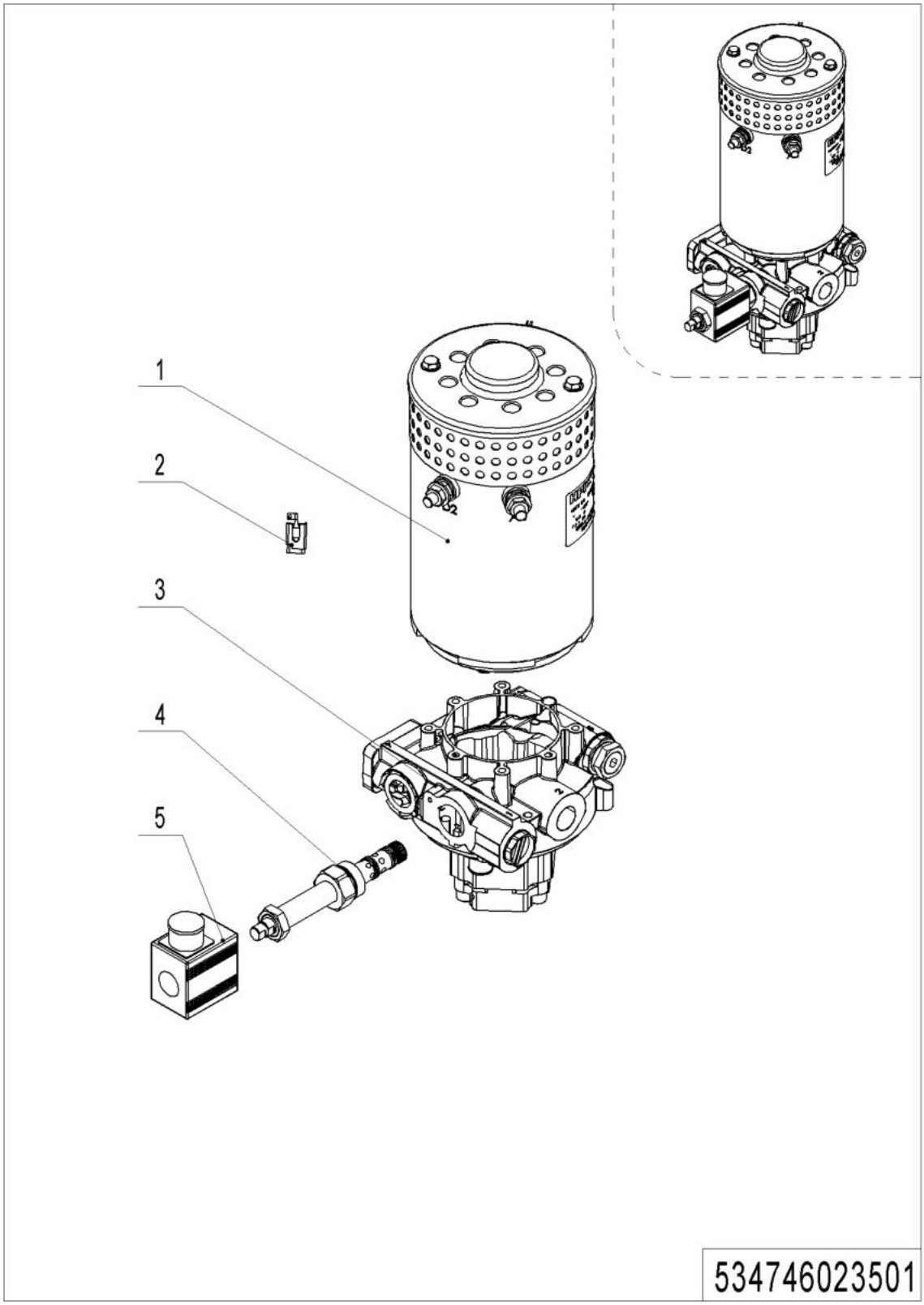

1= Supply as package. 2= Supply with constraints. 3= Phasing-out supply. 4= Supply as assembly. 5= Check other tables.

04 Pump Unit (HPI,3.2KW) (534746023501)

No.	Item Code	Mark	Item Description	Qty.	Substitute	Note
--	950900100015		Pump Unit	1		**HPI,3.2KW**
1	534798510006	2	Motor	1		
2	534798520026	2	Carbon Brush	1		
3	534798510007	2	Valve Block	1		
4	534798520024	2	Magnetic Valve	1		**Provide with coil**
5	534798520025	2	Coil	1		**Provide with valve**

05 Pump Unit (VIBO,3.2KW)(534746023502)

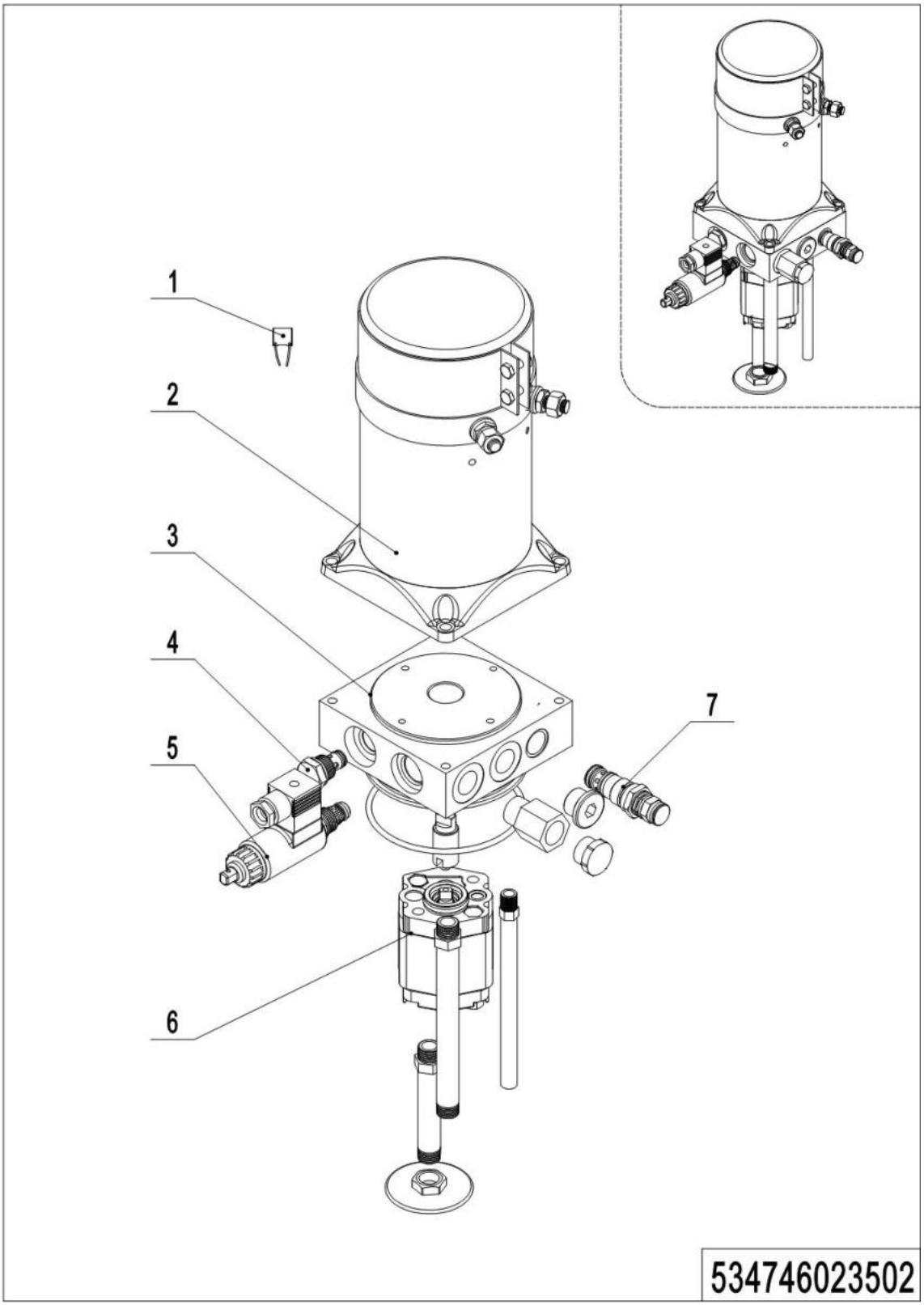

1= Supply as package. 2= Supply with constraints. 3= Phasing-out supply. 4= Supply as assembly. 5= Check other tables.

05 Pump Unit (VIBO,3.2KW) (534746023502)

No.	Item Code	Mark	Item Description	Qty.	Substitute	Note
--	950900100098		Pump Unit	1		**VIBO,3.2KW**
1	535998510013	2	Carbon Brush	1		
2	534798510012	2	Motor	1		
3	534798510013	2	Valve	1		
4	532098510003	2	Check Valve	1		
5	534798510014	2	Magnetic Valve	1		
6	534798510015	2	Gear Pump	1		
7	402698520018	2	Overflow Valve	1		

Chapter 3: Truck Frame

01 Chassis (535646021501)

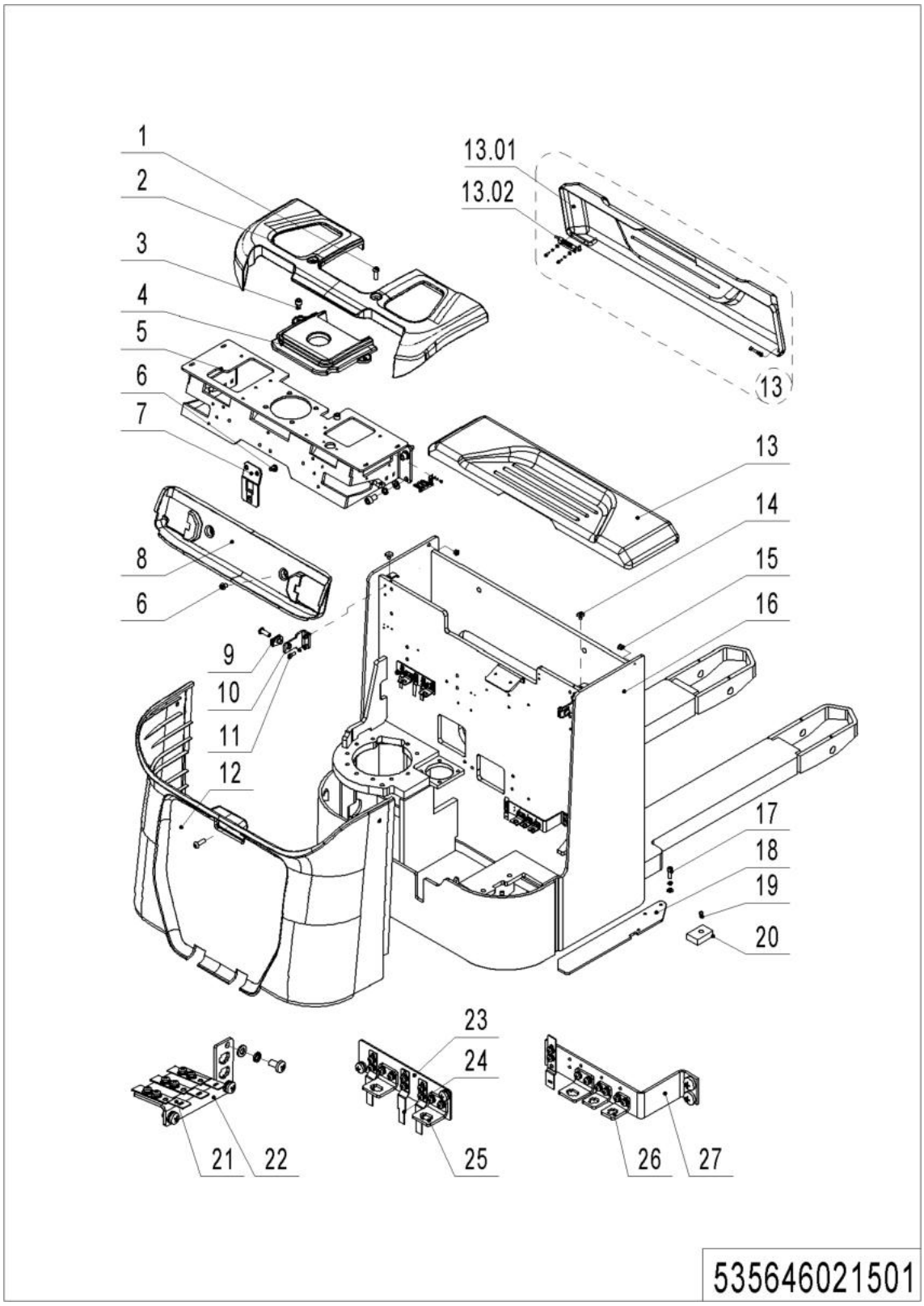

01 Chassis (535646021501)

No.	Item Code	Mark	Item Description	Qty.	Substitute	Note
1	941100100004	1	Screw	5		
2	535921520040		Protective Cover	1		
3	910200200074	1	Screw	2		
4	535921520042		Protective Cover	1		
5	535917510000	2	Mounting Base	1		
6	941100100005	1	Screw	4		
7	535921520032		Mounting Plate	1		
8	535921520041		Protective Cover	1		
9	940400400003		Cage Nut	3		
10	535921520031		Mounting Plate	2		
11	910200200035	1	Screw	8		
12	535921520039		Protective Cover	1		
13	535698510000		Cell Cover Assembly	1		
13.01	535621010001		Cell Cover	1		
13.02	940800900001		Lock Pin	1		
14	505938520016		Crash Pad	2		
15	534721520023		Sleeve	2		
16	535621510000	2	Chassis(570)	1		
16	535621510001	2	Chassis(685)	1		
16	535621510002	2	Chassis(Power steering，570)	1		
16	535621510003	2	Chassis(Power steering，685)	1		
17	910200200058	1	Screw	3		
18	535621520005		Guard Plate	1		
19	910200300017	1	Screw	2		
20	534721520024		Crash Pad	2		
21	921300300005		Holder	5		
22	535921520028		Mounting Plate	1		
23	535921520027		Mounting Plate	1		
24	921300300010		Connector Holder	3		
25	921300300003		Holder	3		

1= Supply as package. 2= Supply with constraints. 3= Phasing-out supply. 4= Supply as assembly. 5= Check other tables.

01 Chassis (535646021501) Continuation

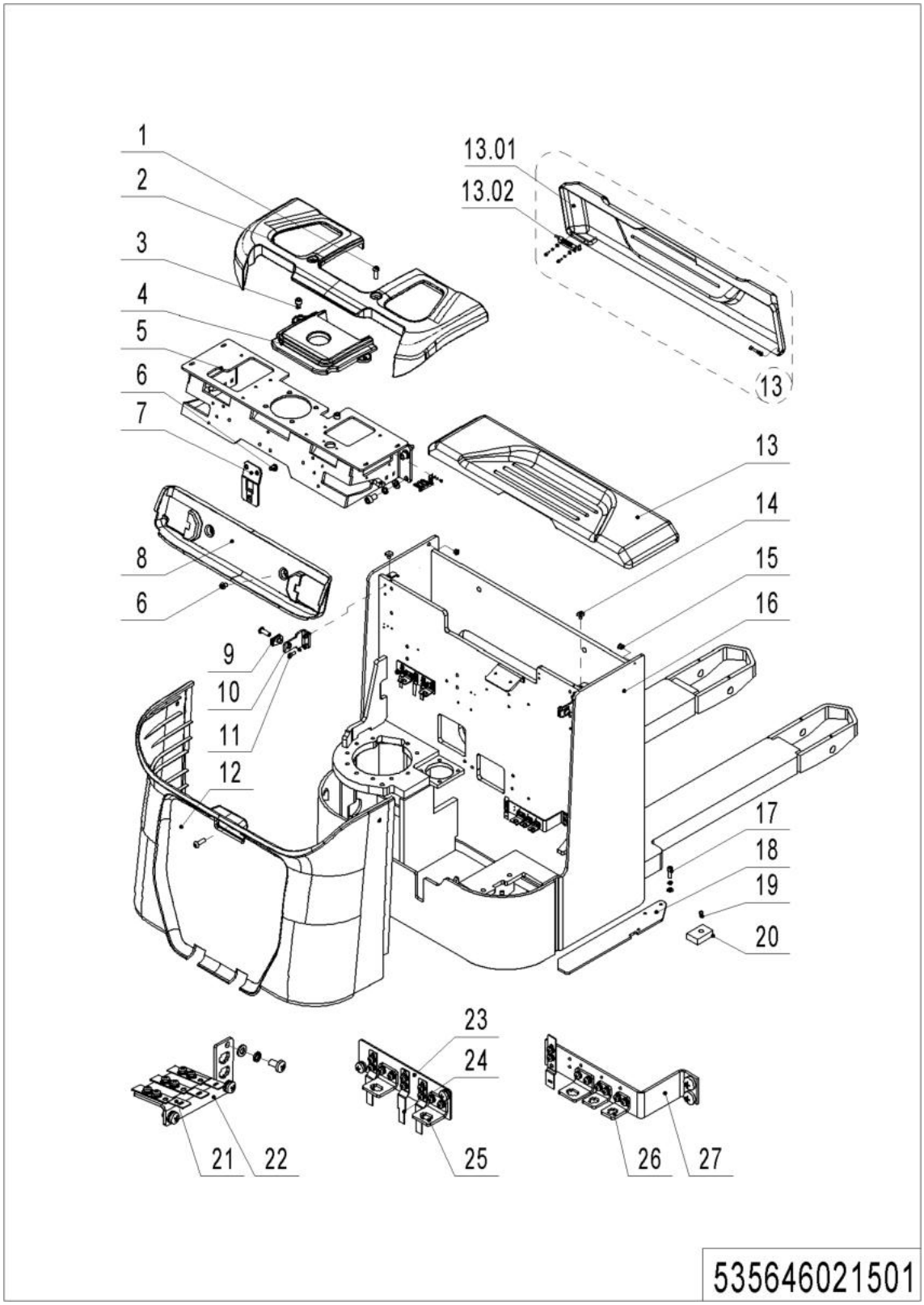

01 Chassis (535646021501) Continuation

No.	Item Code	Mark	Item Description	Qty.	Substitute	Note
26	921300300002		Holder	2		
27	535921520026		Mounting Plate	1		

02 Protective Arm (535946017501)

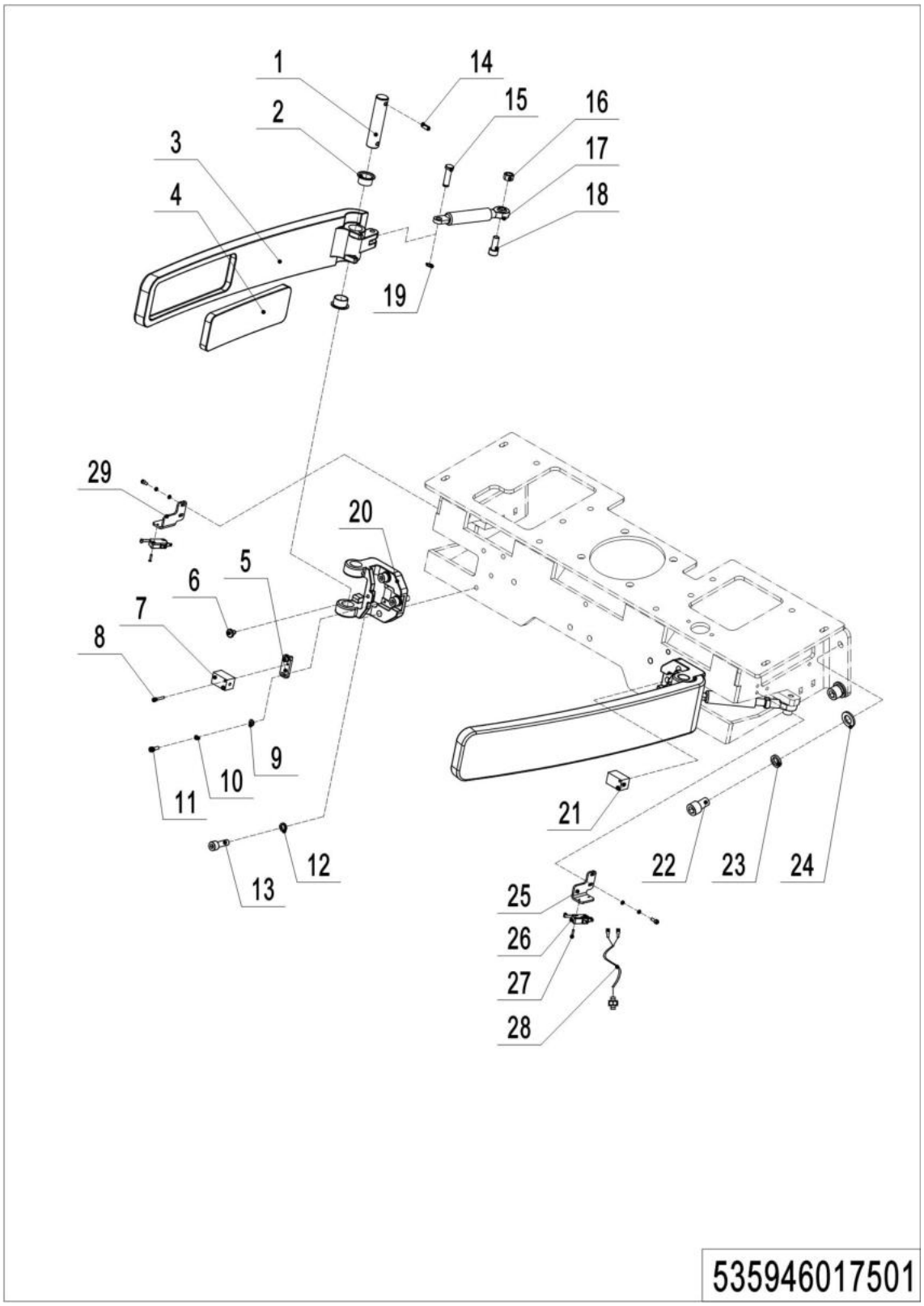

02 Protective Arm (535946017501)

No.	Item Code	Mark	Item Description	Qty.	Substitute	Note
1	535917520007		Axle	2		
2	940500200003		Bushing	2		
3	535917520008		Protective Arm	2		
4	535917520009		Protective Mat	2		
5	535917520011		Mounting Plate	2		
6	535917520012		Protective Mat	2		
7	535933510001		Proximity Switch	1		
8	910200500015	1	Screw	4		
9	910400100003	1	Flat Washer	8		
10	910400500003	1	Spring Washer	8		
11	910200200014	1	Screw	8		
12	910400500006	1	Spring Washer	6		
13	910200200058	1	Screw	6		
14	910600400025	1	Spring Pin	2		
15	535917520010		Axle	2		
16	910300100006	1	Nut	2		
17	940400100037		Air Spring	2		
18	910200200060	1	Screw	2		
19	910401300001	1	Circlip	2		
20	535917520006		Mounting Base	2		
21	535933510000		Proximity Switch	1		
22	910200200096	1	Screw	4		
23	910400500008	1	Spring Washer	4		
24	910400100008	1	Flat Washer	4		
25	535917520013		Mounting Plate	1		With safety switch
26	920200300016		Micro switch	2		With safety switch
27	910200500014		Screw	4		With safety switch
28	506733010025		Wire Harness	2		With safety switch
29	535917520014		Mounting Plate	1		With safety switch

03 Platform Assembly (535946018001)

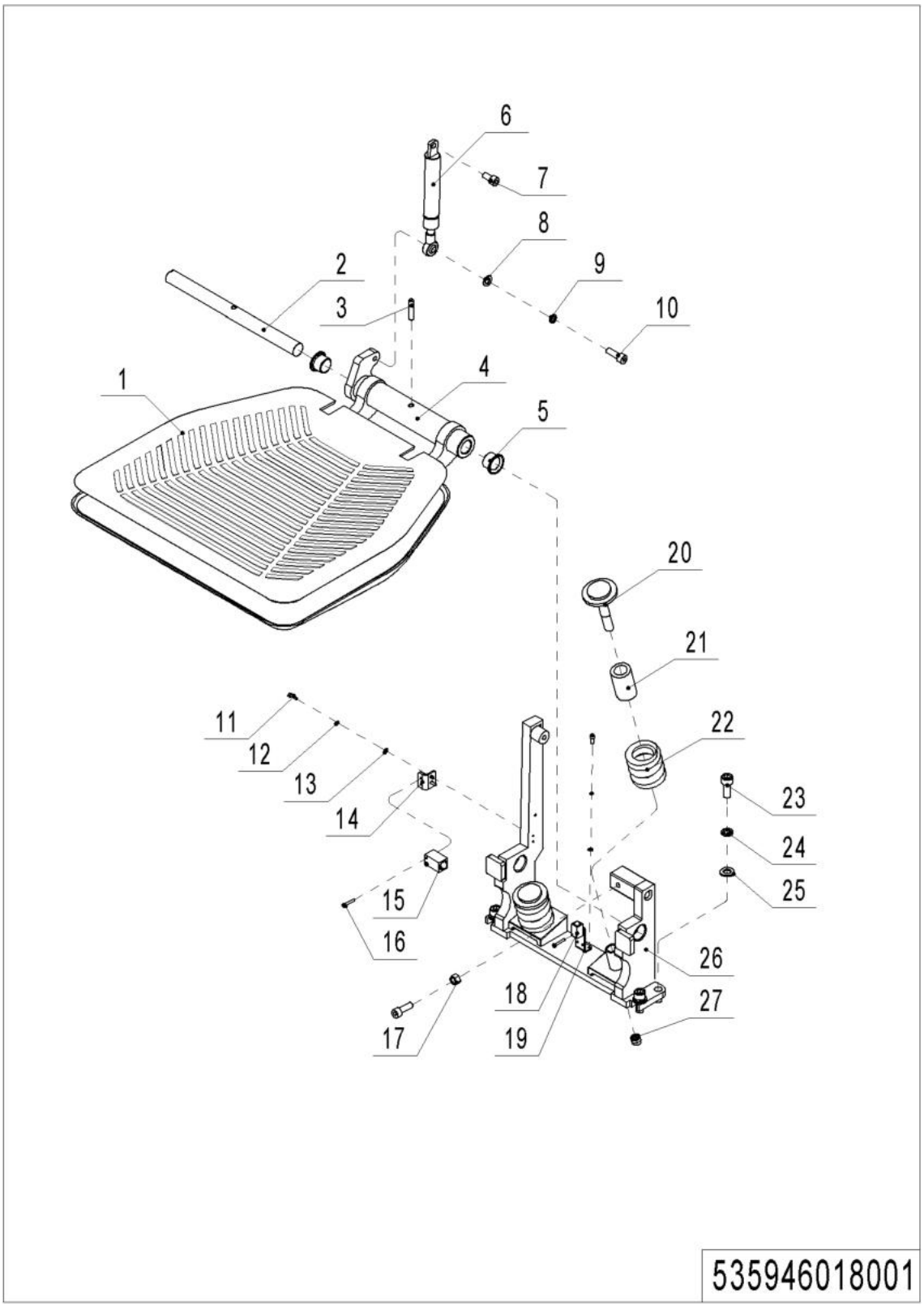

03 Platform Assembly (535946018001)

No.	Item Code	Mark	Item Description	Qty.	Substitute	Note
1	535918020019		Mat	1		
2	535918020014		Axle	1		
3	910600400040		Spring Pin	1		
4	535918010001		Platform	1		
5	940500100019		Bushing	2		
6	940500200008		Bushing	2		
7	940400100042		Air Spring	1		
7	940400100057		Air Spring	1		With safety switch
8	910200200057		Screw	1		
9	910400100006		Flat Washer	1		
10	910400500006		Spring Washer	1		
11	910200200058		Screw	2		
12	910200200014		Screw	4		
13	910400500003		Spring Washer	4		
14	910400100003		Flat Washer	4		
15	535918020015		Mounting Plate	1		
16	535933510002		Proximity Switch	1		
17	910200500015		Screw	2		
18	910300100007		Nut	1		
19	506733510005		Proximity Switch	1		With safety switch
20	535918020022		Mounting Plate	1		With safety switch
21	535918020017		Bolt	2		
22	535918020018		Cushion Collar	2		
23	535918020016		Spring	2		
24	910200200076		Screw	4		
25	910400500007		Spring Washer	4		
26	910400100007		Flat Washer	4		
27	535918010000		Mounting Base	1		
28	910300500006		Nut	2		

04 Platform (EPS,EN1175-2020) (535946018002)

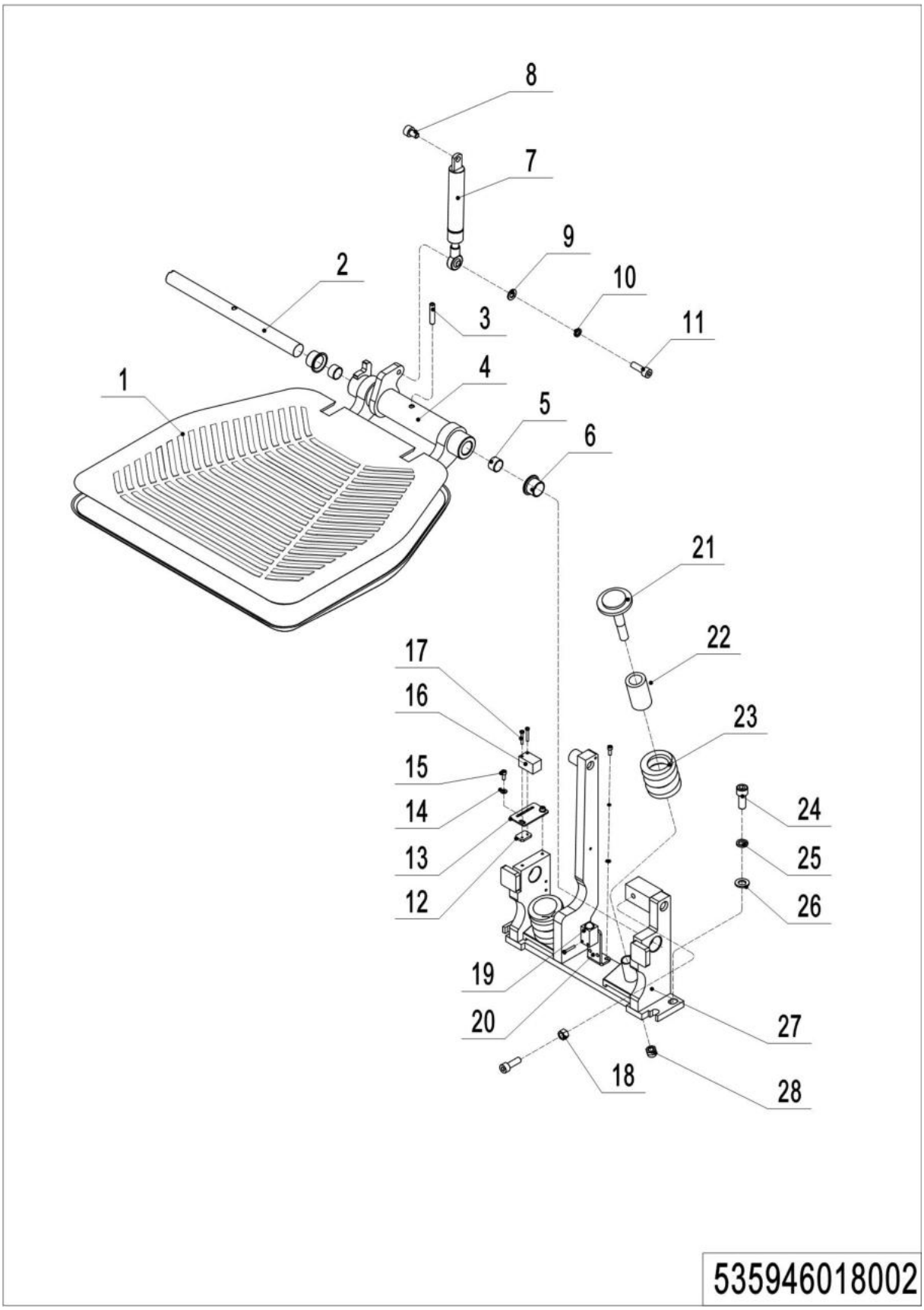

04 Platform(EPS,EN1175-2020) (535946018002)

No.	Item Code	Mark	Item Description	Qty.	Substitute	Note
1	535918020019		Pedal Pad	1		
2	535918020014		Axle	1		
3	910600400040		Spring Pin	1		
4	562618010001		Platform	1		
5	940500100019		Bushing	2		
6	940500200008		Bushing	2		
7	940400100057		Air Spring	1		
8	910200200057		Screw	1		
9	910400100006		Flat Washer	1		
10	910400500006		Spring Washer	1		
11	910200200058		Screw	2		
12	535918020027		Mounting Plate	1		
13	562618020005		Mounting Plate	1		
14	910400100003		Flat Washer	2		
15	910200200013		Screw	2		
16	535933510002		Proximity Switch	1		
17	910200500015		Screw	2		
18	910300100007		Nut	1		
19	506733510005		Proximity Switch	1		
20	535918020022		Mounting Plate	1		
21	535918020017		Bolt	2		
22	535918020018		Cushion Collar	2		
23	535918020016		Spring	2		
24	910200200076		Screw	4		
25	910400500007		Spring Washer	4		
26	910400100007		Flat Washer	4		
27	562618010000		Mounting Base	1		
28	910300500006		Nut	2		

05 Fork Carriage (534446038001)

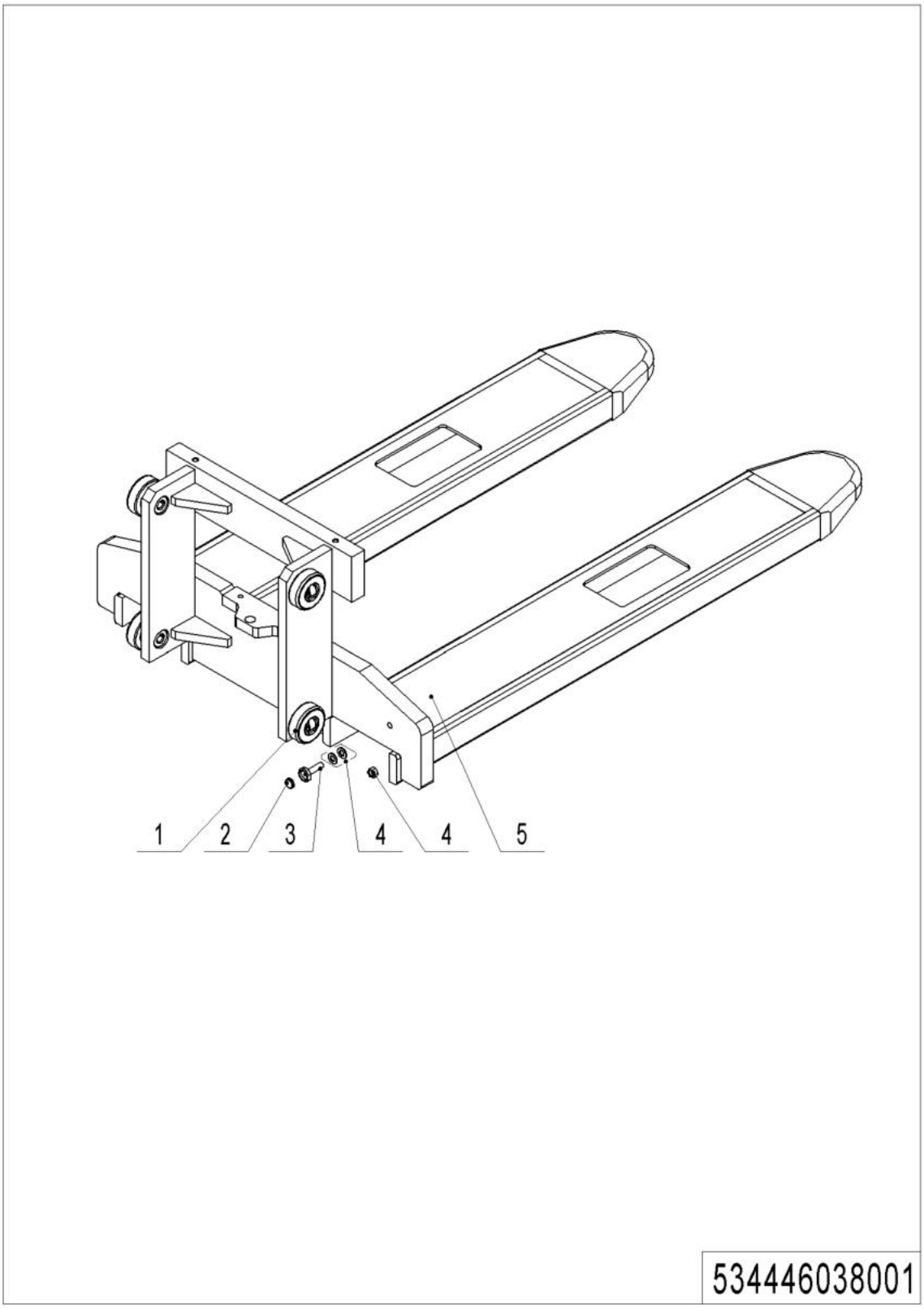

1= Supply as package. 2= Supply with constraints. 3= Phasing-out supply. 4= Supply as assembly. 5= Check other tables.

05 Fork Carriage (534446038001)

No.	Item Code	Mark	Item Description	Qty.	Substitute	Note
1	940200300002		Compound Roller	4		
2	940600100001		Magnetic Steel	1		
3	940600200001		Mounting Base	1		
4	910400100007	1	Flat Washer	2		
4	910300100007	1	Nut	1		
5	534438010000	2	Fork(570x1150)	1		**DX**
5	534438010001	2	Fork(685x1150)	1		**DX**
5	534438010002	2	Fork(570x1150)	1		**DX+FFL**
5	534438010003	2	Fork(685x1150)	1		**DX+FFL**
5	534438010004	2	Fork(570x1150)	1		**TX+FFL**
5	534438010005	2	Fork(685x1150)	1		**TX+FFL**

Chapter 4: Mast System

01 Two-stage mast standard lift (535646044001)

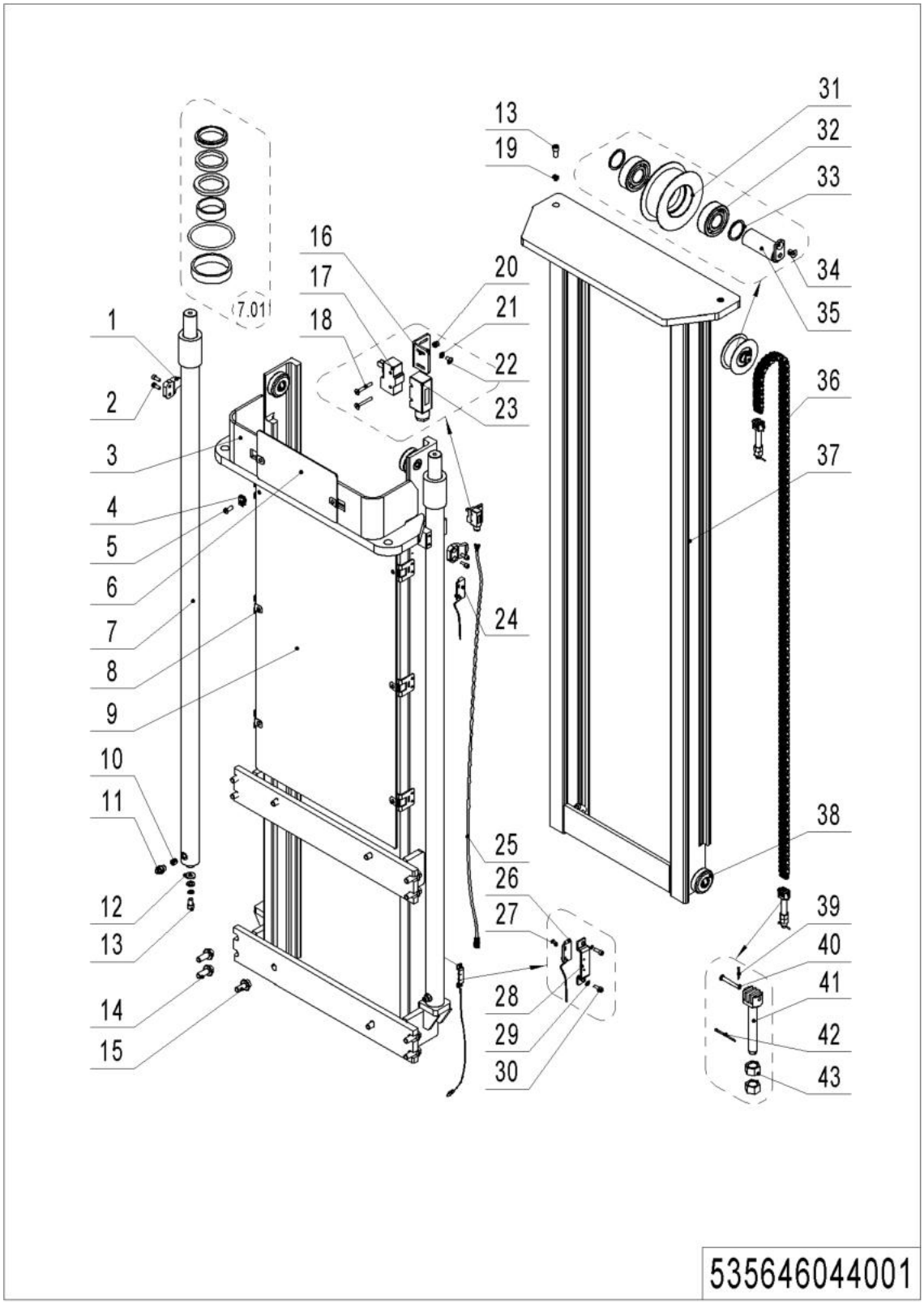

01 Two-stage mast standard lift (535646044001)

No.	Item Code	Mark	Item Description	Qty.	Substitute	Note
1	275044020076		Fixing Plate	2		
2	910200200057	1	Screw	4		
3	534444010013	2	Outer Mast(2900)	1		
3	534444010011	2	Outer Mast(3200)	1		
3	534444010009	2	Outer Mast(3600)	1		
4	940400400003		Cage Nut	2		
5	941100100005	1	Screw	2		
6	534744520037		Guard Plate	1		
7	534444010008		Cylinder	2		**2900**
7	534444010007		Cylinder	2		**3200**
7	534444010006		Cylinder	2		**3600**
7.01	534498510002		Seal Kit	1		
8	940400300001		Spring Buckle	4		
8	940400300001		Spring Buckle	6		
9	534744020011		Guard Plate	1		**2900**
9	534744520038		Guard Plate	1		**3200**
9	534744020006		Guard Plate	1		**3600**
10	950600300001		Safety Valve	2		
11	950400400003		Joint	3		
12	534744520015		Subplate	2		
13	910200200097	1	Screw	4		
14	910100800006	1	Bolt	8		
15	910100800005	1	Bolt	4		
16	534744520036		Fixing Plate	1		
17	920200300001		Microswitch	1		
18	910200400007	1	Screw	2		
19	910400500008	1	Spring Washer	2		
20	910300500001	1	Nut	2		
21	910400100003	1	Flat Washer	2		
22	910200300005	1	Screw	2		

1= Supply as package. 2= Supply with constraints. 3= Phasing-out supply. 4= Supply as assembly. 5= Check other tables.

01 Two-stage mast standard lift (535646044001) Continuation 1

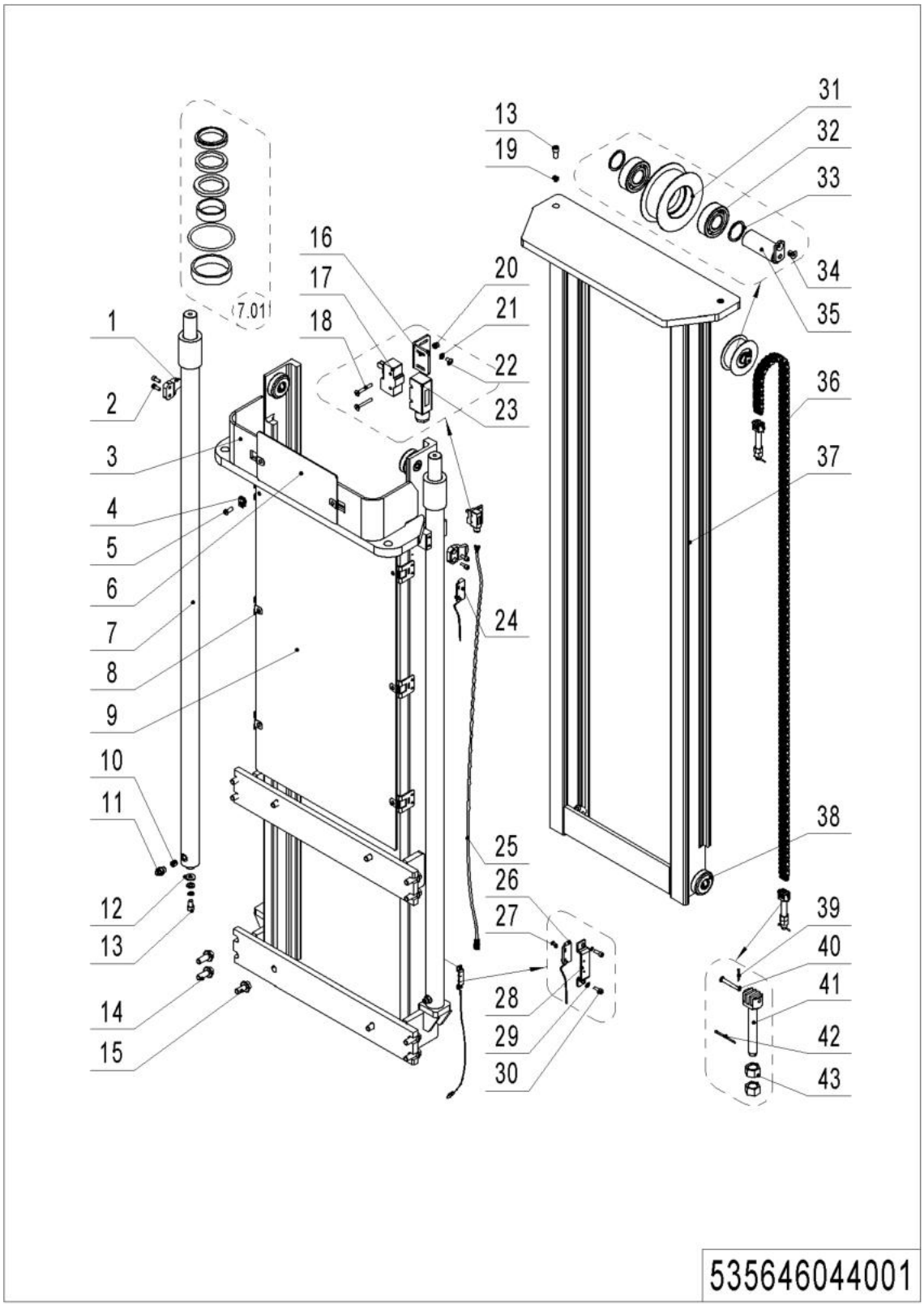

01 Two-stage mast standard lift (535646044001) Continuation 1

No.	Item Code	Mark	Item Description	Qty.	Substitute	Note
23	920200300008		Protective Cover	1		
24	535933510012		Switch	1		**2900**
24	535933510013		Switch	1		**3200**
24	535933510015		Switch	1		**3600**
24	535933510021		Switch	1		**EN1175-2020**
25	535933510025		Wire Harness	1		
26	535933510005		Switch	1		
26	535933510020		Switch	1		**EN1175-2020**
27	910200500010	1	Screw	4		
27	910200500021	1	Screw	4		**EN1175-2020**
28	534744520059		Protective Cover	2		
28	534744520080		Protective Cover	2		**EN1175-2020**
29	910400500003	1	Spring Washer	4		
30	910200300006	1	Screw	4		
31	940200400006		Sprocket	1		
32	910700200021		Bearing	2		
33	940600500008	1	Washer	2		
34	910200400016	1	Screw	1		
35	533544510006		Pin	1		
36	534444010024		Chain	1		**2900**
36	534444010026		Chain	1		**3200**
36	534444010025		Chain	1		**3600**
37	534444010014	2	Inner Mast(2900)	1		
37	534444010012	2	Inner Mast(3200)	1		
37	534444010010	2	Inner Mast(3600)	1		
38	940200300001		Compound Roller	4		
39	910600600006	1	Cotter Pin	2		
40	941100800005		Pin	2		
41	533244020020		Chain Anchor	2		
42	910600600023	1	Cotter Pin	2		
43	910300200008	1	Nut	4		

1= Supply as package. 2= Supply with constraints. 3= Phasing-out supply. 4= Supply as assembly. 5= Check other tables.

02 Two-stage mast full free lift (535646043501)

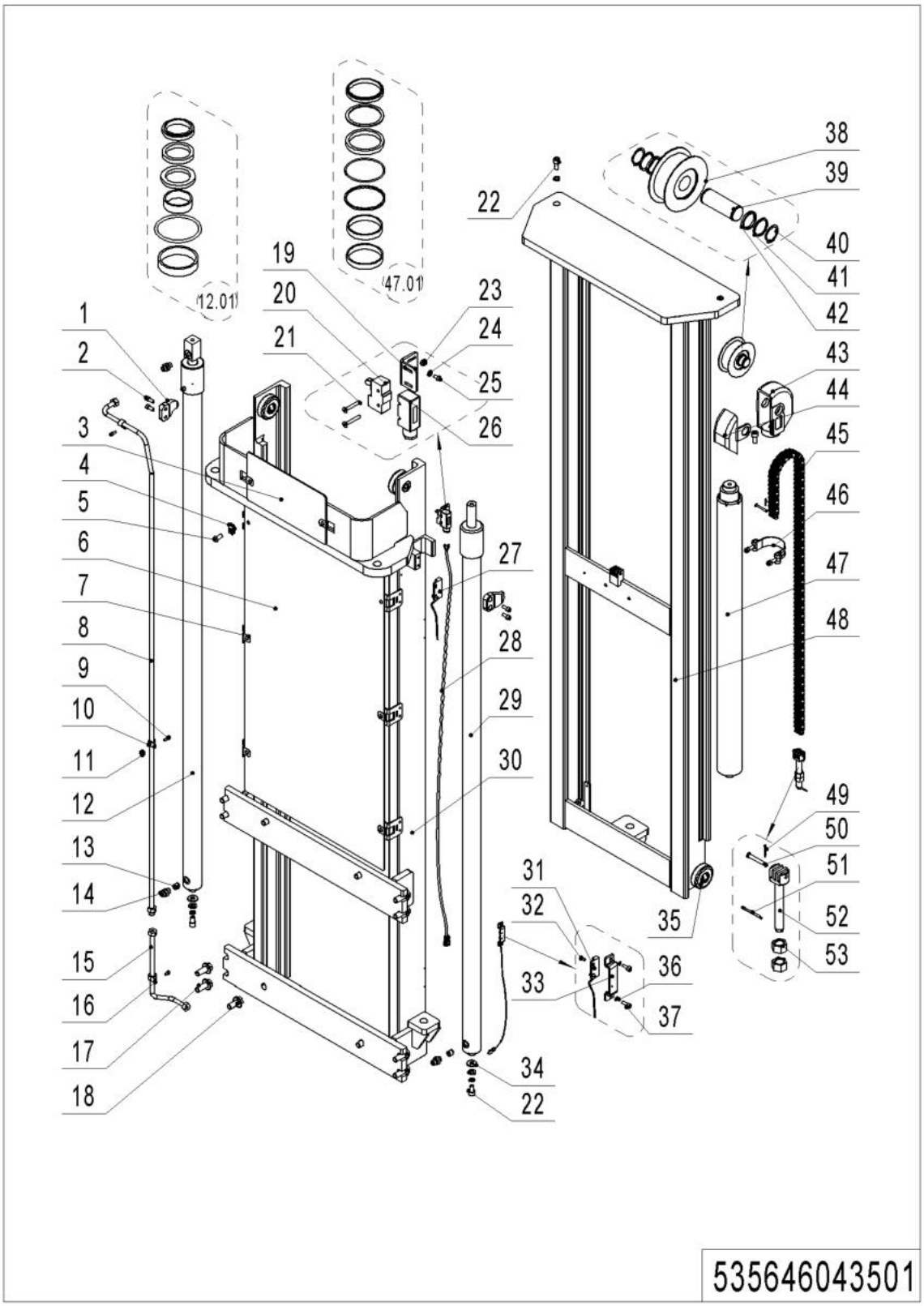

02 Two-stage mast full free lift (535646043501)

No.	Item Code	Mark	Item Description	Qty.	Substitute	Note
1	275044020076		Fixing Plate	2		
2	910200200057	1	Screw	4		
3	534744520037		Guard Plate	1		
4	940400400003		Cage Nut	2		
5	941100100005	1	Screw	2		
6	534744020011		Guard Plate	1		**2900**
6	534744520038		Guard Plate	1		**3200**
6	534744020006		Guard Plate	1		**3600**
7	940400300001		Spring Buckle	4		
7	940400300001		Spring Buckle	6		
8	534743510017		Steel Tube	1		**2900**
8	534743510016		Steel Tube	1		**3200**
8	534443520001		Steel Tube	1		**3600**
9	910200200035		Screw	3		
10	951000100001		Hose Clamp	2		
11	940600500001		Washer	2		
12	534444010017		Cylinder	1		**2900**
12	534444010016		Cylinder	1		**3200**
12	534444010015		Cylinder	1		**3600**
12.01	534498510000		Seal Kit	2		**Also for cylinder 29**
13	950600300001		Safety Valve	3		
14	950400400003		Joint	4		
15	534743510018		Steel Tube	1		
16	951000100003		Hose Clamp	1		
17	910100800006	1	Bolt	8		
18	910100800005	1	Bolt	4		
19	534744520036		Fixing Plate	1		
20	920200300001		Microswitch	1		
21	910200400007	1	Screw	2		
22	910200200097	1	Screw	5		

1= Supply as package. 2= Supply with constraints. 3= Phasing-out supply. 4= Supply as assembly. 5= Check other tables.

02 Two-stage mast full free lift (535646043501) Continuation 1

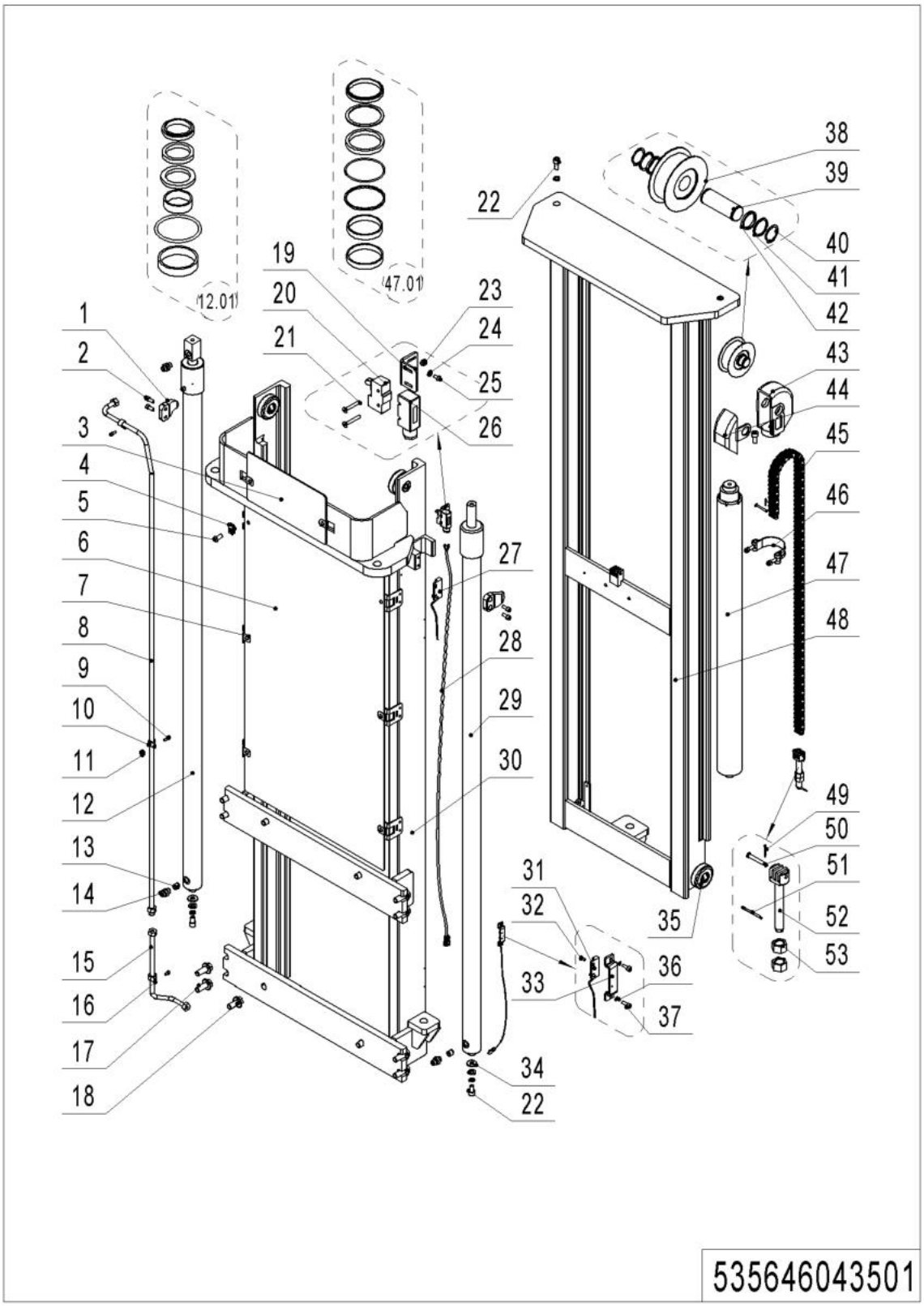

02 Two-stage mast full free lift (535646043501) Continuation 1

No.	Item Code	Mark	Item Description	Qty.	Substitute	Note
23	910300500001	1	Nut	2		
24	910400100003	1	Flat Washer	2		
25	910200300005	1	Screw	2		
26	920200300008		Protective Cover	1		
27	535933510012		Switch	1		**2900**
27	535933510013		Switch	1		**3200**
27	535933510015		Switch	1		**3600**
27	535933510021		Switch	1		**EN1175-2020**
28	535933510025		Wire harness	1		
29	534444010023		Cylinder	1		**2900**
29	534444010022		Cylinder	1		**3200**
29	534444010021		Cylinder	1		**3600**
30	534443510004	2	Outer Mast(2900)	1		
30	534443510002	2	Outer Mast(3200)	1		
30	534443510000	2	Outer Mast(3600)	1		
31	535933510005		Switch	1		
31	535933510020		Switch	1		**EN1175-2020**
32	910200500010	1	Screw	2		
32	910200500021	1	Screw	4		**EN1175-2020**
33	534744520059		Protective Cover	2		
33	534744520080		Protective Cover	2		**EN1175-2020**
34	534744520015		Subplate	2		
35	940200300001		Compound Roller	4		
36	910400500003	1	Spring Washer	4		
37	910200300006	1	Screw	4		
38	940200500010		Sprocket Bearing	1		
39	910401300016		Circlip	1		
40	532644520037	1	Axle	2		
41	940600500009	1	Washer	2		
42	940600500008	1	Washer	2		

02 Two-stage mast full free lift (535646043501) Continuation 2

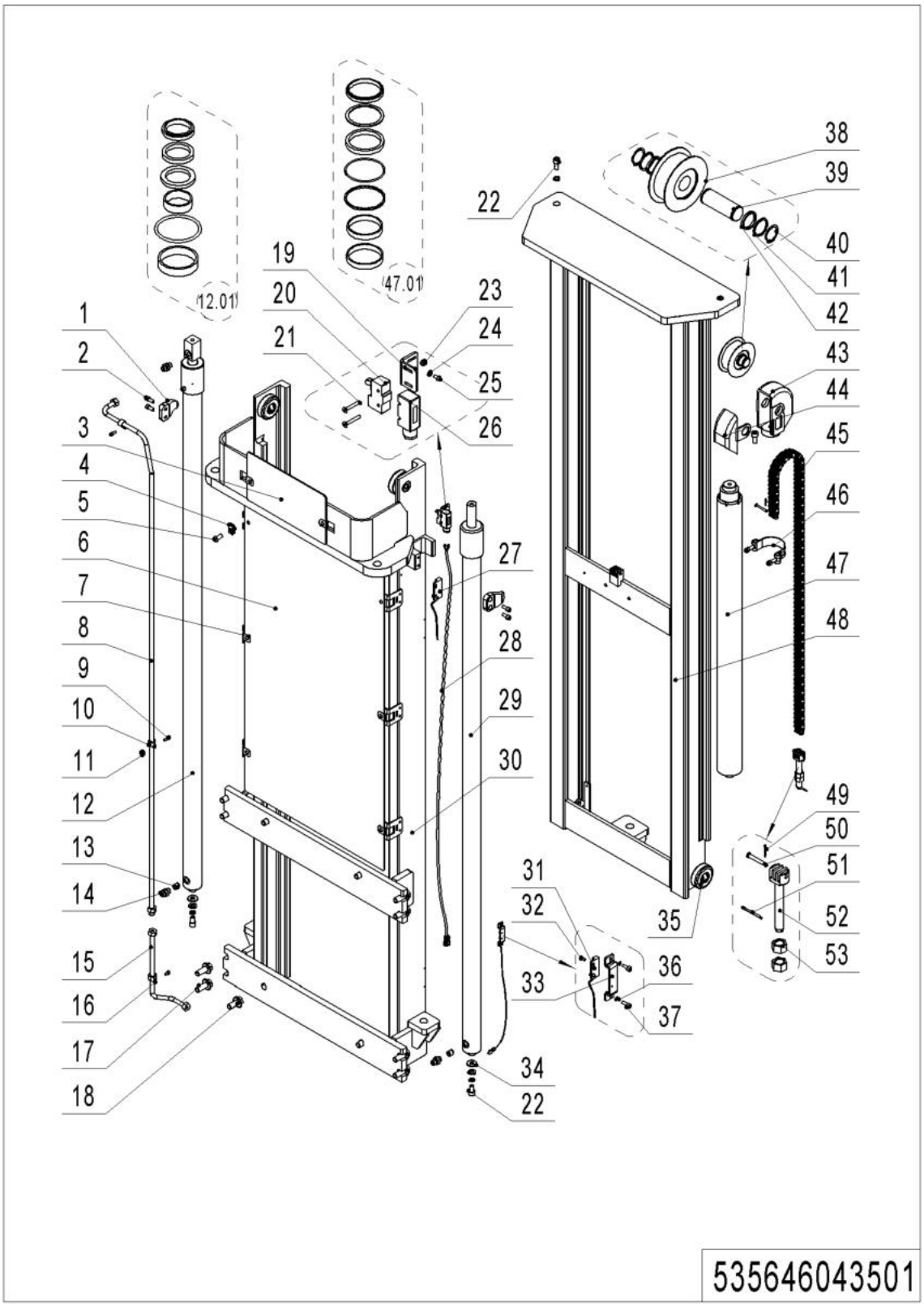

02 Two-stage mast full free lift (535646043501) Continuation 2

No.	Item Code	Mark	Item Description	Qty.	Substitute	Note
43	532644520035		Yoke	1		
44	532644520036		Side Cover	1		
45	251044510096		Chain	1		**2900**
45	534744510024		Chain	1		**3200**
45	532644510079		Chain	1		**3600**
46	940800600002		Hoop	1		
47	534444010020		Cylinder	1		**2900**
47	534444010019		Cylinder	1		**3200**
47	534444010018		Cylinder	1		**3600**
47.01	534498510001		Seal Kit	1		
48	534443510005	2	Inner Mast(2900)	1		
48	534443510003	2	Inner Mast(3200)	1		
48	534443510001	2	Inner Mast(3600)	1		
49	910600600006	1	Cotter Pin	2		
50	941100800012		Pin	2		
51	910600600023	1	Cotter Pin	1		
52	532644520038		Chain Anchor	1		
53	910300200008	1	Nut	2		

03 Triple Mast Full Free Lift (535646044501)

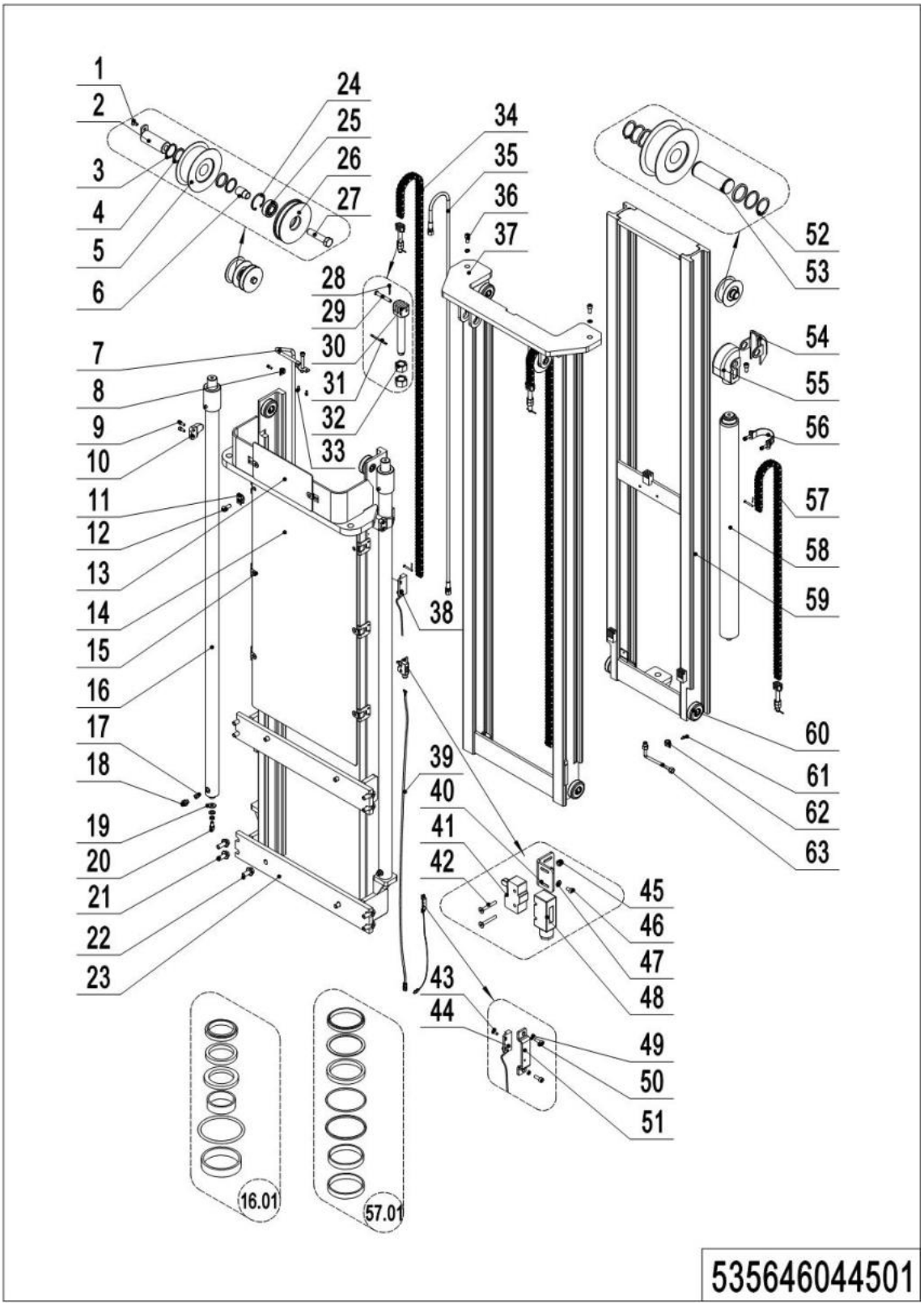

1= Supply as package. 2= Supply with constraints. 3= Phasing-out supply. 4= Supply as assembly. 5= Check other tables.

03 Triple Mast Full Free Lift (535646044501)

No.	Item Code	Mark	Item Description	Qty.	Substitute	Note
1	910200400016	1	Screw	2		
2	533544510006		Pin	2		
3	940200500010		Sprocket Bearing	3		
4	940600500009	1	Washer	6		
5	940600500008	1	Washer	6		
6	535944520001		Sleeve	1		
7	534744510021		Steel Tube	1		**4300**
7	534744510020		Steel Tube	1		**4600**
8	951000100001		Hose Clamp	2		
9	910200200057	1	Screw	4		
10	275044020076		Fixing Plate	2		
11	940400400003		Cage Nut	2		
12	941100100005	1	Screw	2		
13	534744520037		Guard Plate	1		
14	534744520039		Guard Plate	1		**4300**
14	534744520038		Guard Plate	1		**4600**
15	940400300001		Spring Buckle	6		
16	534744510017		Cylinder	2		**4300**
16	534744510016		Cylinder	2		**4600**
16.01	534798510000		Seal Kit	2		
17	950600300001		Safety Valve	3		
18	950400400003		Joint	3		
19	534744520015		Subplate	2		
20	910200200096	1	Screw	2		
21	910100800006	1	Bolt	8		
22	910100800005	1	Bolt	4		
23	534444510004	2	Outer Mast(4300)	1		
23	534444510000	2	Outer Mast(4600)	1		
24	910401400013	1	Circlip	1		
25	910700200019		Bearing	1		

03 Triple Mast Full Free Lift (535646044501) Continuation 1

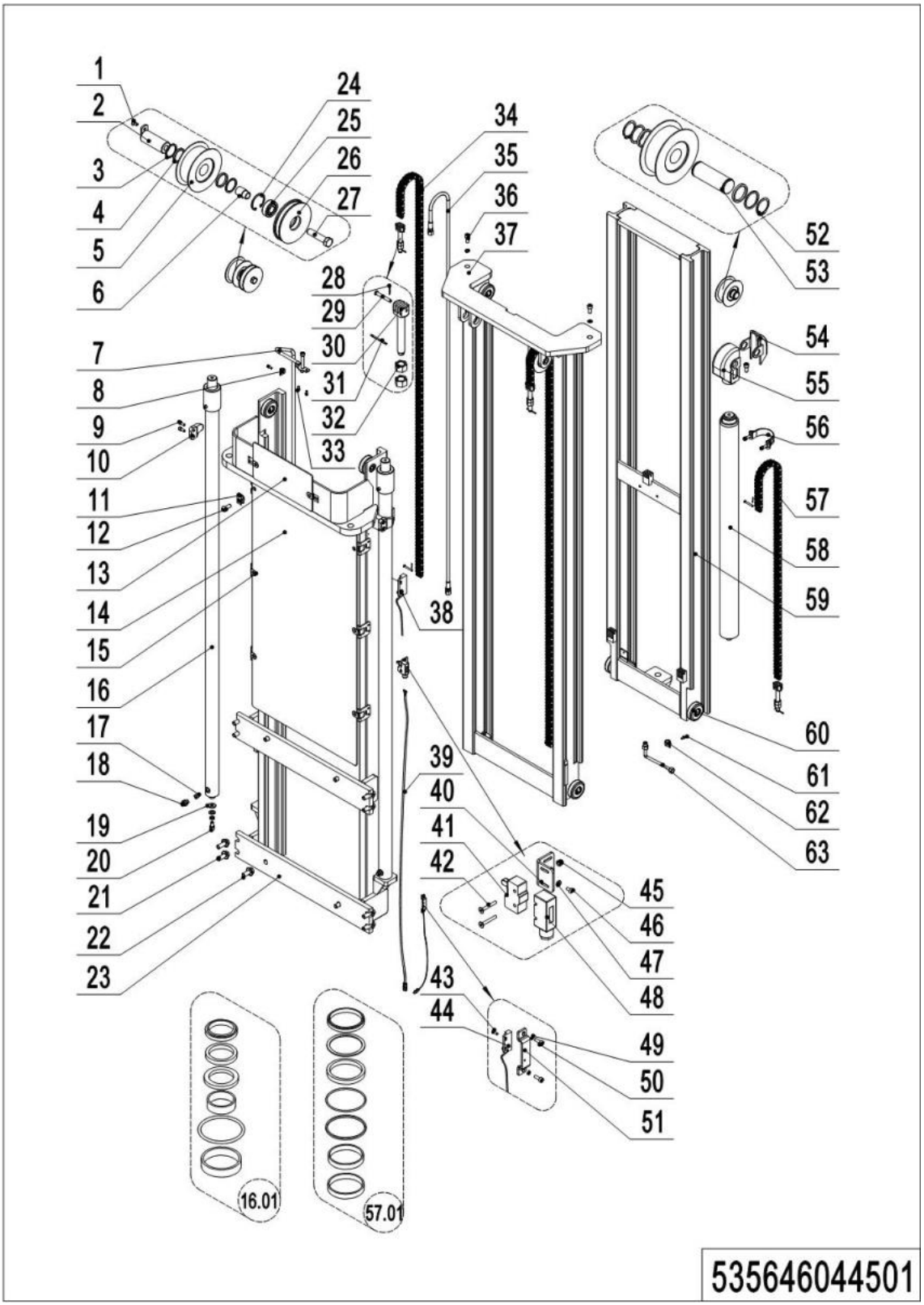

03 Triple Mast Full Free Lift (535646044501) Continuation 1

No.	Item Code	Mark	Item Description	Qty.	Substitute	Note
26	535944520000		Pulley	1		
27	910100100073		Bolt	1		
28	910600600006	1	Cotter Pin	6		
29	941100800012		Pin	6		
30	532644520038		Chain Anchor	3		
31	910600600023	1	Cotter Pin	3		
32	910300200008	1	Nut	6		
33	910200200033	1	Screw	2		
34	534745010009		Chain	2		**4300**
34	534145010005		Chain	2		**4600**
35	532644520143		Hose	1		**4300**
35	532644520144		Hose	1		**4600**
36	910200200097	1	Screw	3		
37	534444510005	2	Middle Mast(4300)	1		
37	534444510001	2	Middle Mast(4600)	1		
38	535933510013		Switch	1		**4300**
38	535933510014		Switch	1		**4600**
38	535933510021		Switch	1		**EN1175-2020**
39	535933510025		Wire Harness	1		
40	534744520036		Fixing Plate	1		
41	920200300001		Microswitch	1		
42	910200400007	1	Screw	2		
43	910200500010	1	Screw	4		
43	910200500021	1	Screw	4		**EN1175-2020**
44	535933510005		Switch	1		
44	535933510020		Switch	1		**EN1175-2020**
45	910300500001	1	Nut	2		
46	910200300005	1	Screw	2		
47	910400100003	1	Flat Washer	2		
48	920200300008		Protective Cover	1		

03 Triple Mast Full Free Lift (535646044501) Continuation 2

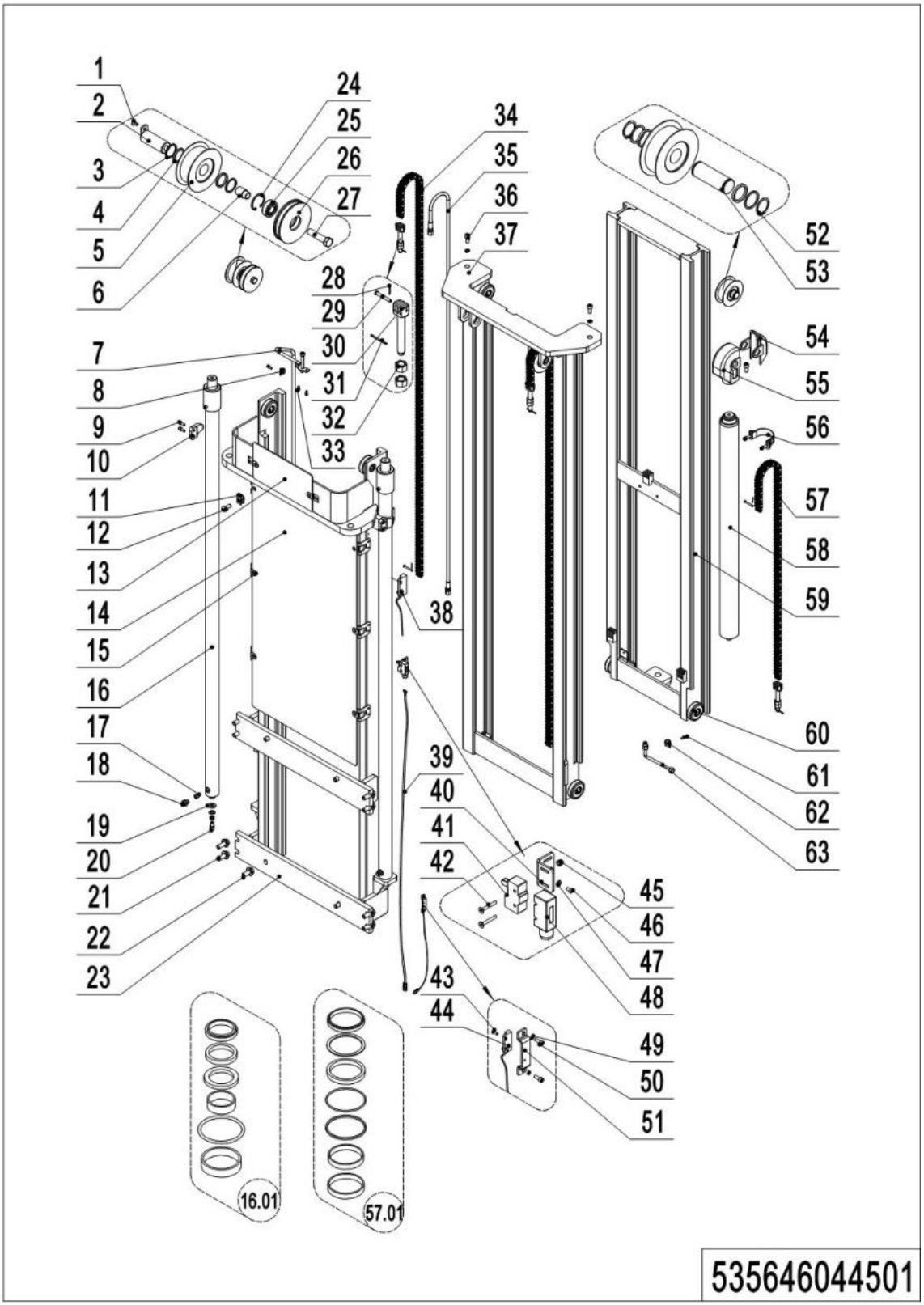

03 Triple Mast Full Free Lift (535646044501) Continuation 2

No.	Item Code	Mark	Item Description	Qty.	Substitute	Note
49	910400500003	1	Spring Washer	4		
50	910200200014	1	Screw	4		
51	534744520059		Protective Cover	2		
51	534744520080		Protective Cover	2		**EN1175-2020**
52	910401300016	1	Circlip	2		
53	532644520037		Axle	1		
54	532644520036		Side Cover	1		
55	532644520035		Yoke	1		
56	940800600002		Hoop	1		
57	532644510083		Chain	1		**4300**
57	534444510003		Chain	1		**4600**
58	534744510013		Cylinder	1		**4300**
58	534744510012		Cylinder	1		**4600**
58.01	534798510001		Seal Kit	1		
59	534444510006	2	Inner Mast(4300)	1		
59	534444510002	2	Inner Mast(4600)	1		
60	940200300001		Compound Roller	8		
61	910200200032	1	Screw	1		
62	951000100003		Hose Clamp	1		
63	533544520006		Steel Tube	1		

Chapter 5: Steering System, Braking System, Wheels

01 Tiller Unit (535946011001)

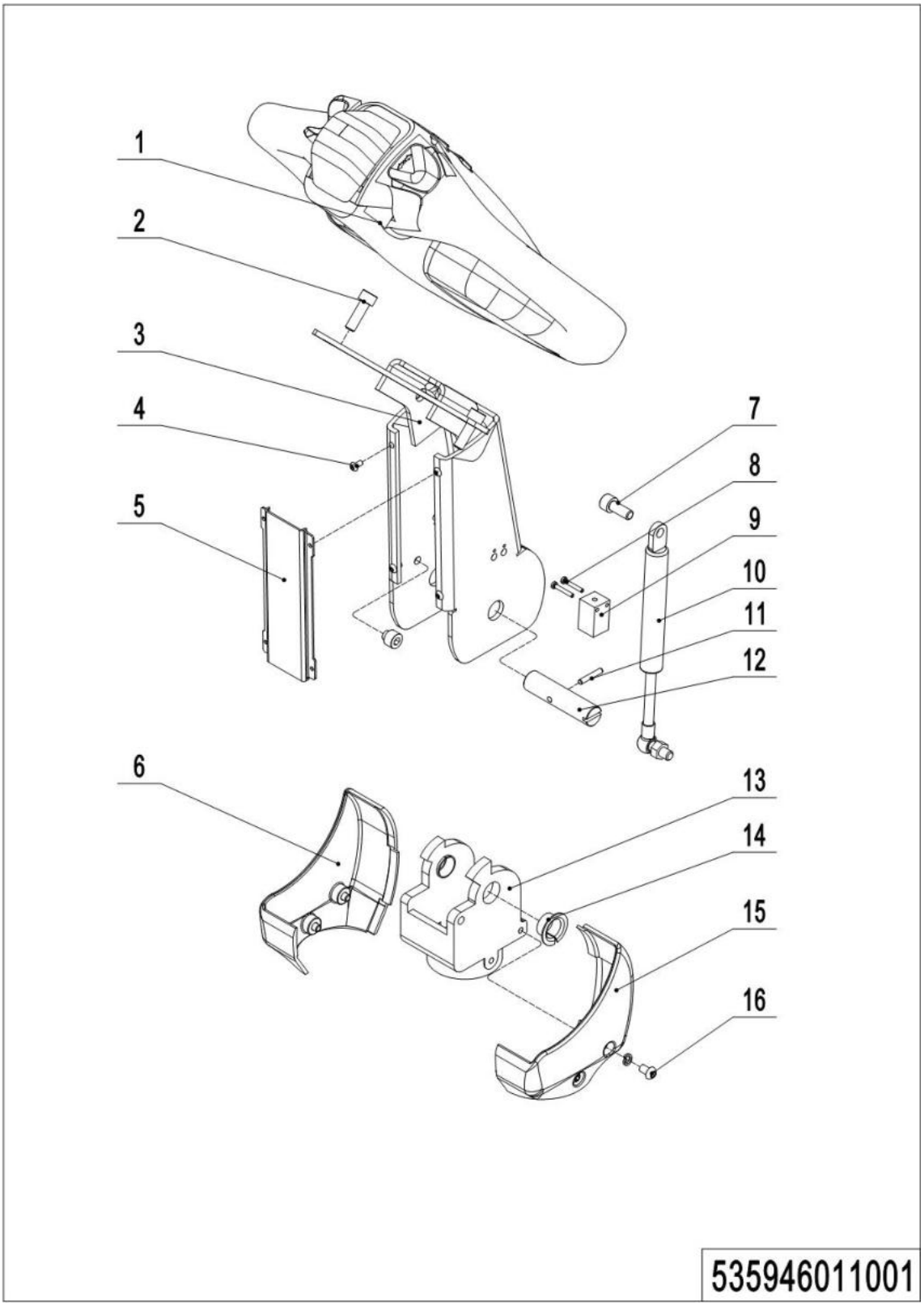

01 Tiller Unit (535946011001)

No.	Item Code	Mark	Item Description	Qty.	Substitute	Note
1	922100100001		Control Handle	1		**See 535946011002**
1	922100100099		Control Handle (**EN1175-2020**)	1		**See 535946011010**
2	910200200058	1	Screw	2		
3	535911010000	2	Tiller	1		
3	535911010001	2	Tiller	1		**Short tiller**
4	910200300005	1	Screw	4		
5	535911020003		Close Plate	1		
5	535911020008		Close Plate	1		**Short tiller**
6	535911020005		Protective Cover	1		
7	910200200057	1	Screw	1		
8	910200500015	1	Screw	2		
9	506733510002		Proximity Switch	1		
10	940400100001		Air Spring	1		
10	940400100045		Air Spring	1		**Short tiller**
11	910600400013	1	Spring Pin	1		
12	505611020008		Axle	1		
13	535911020004		Bracket	1		
13	535911020009		Bracket	1		**Short tiller**
14	940500200002		Bushing	2		
15	535911020006		Protective Cover	1		
16	910200300016	1	Screw	4		

02 Control Handle (535946011002)

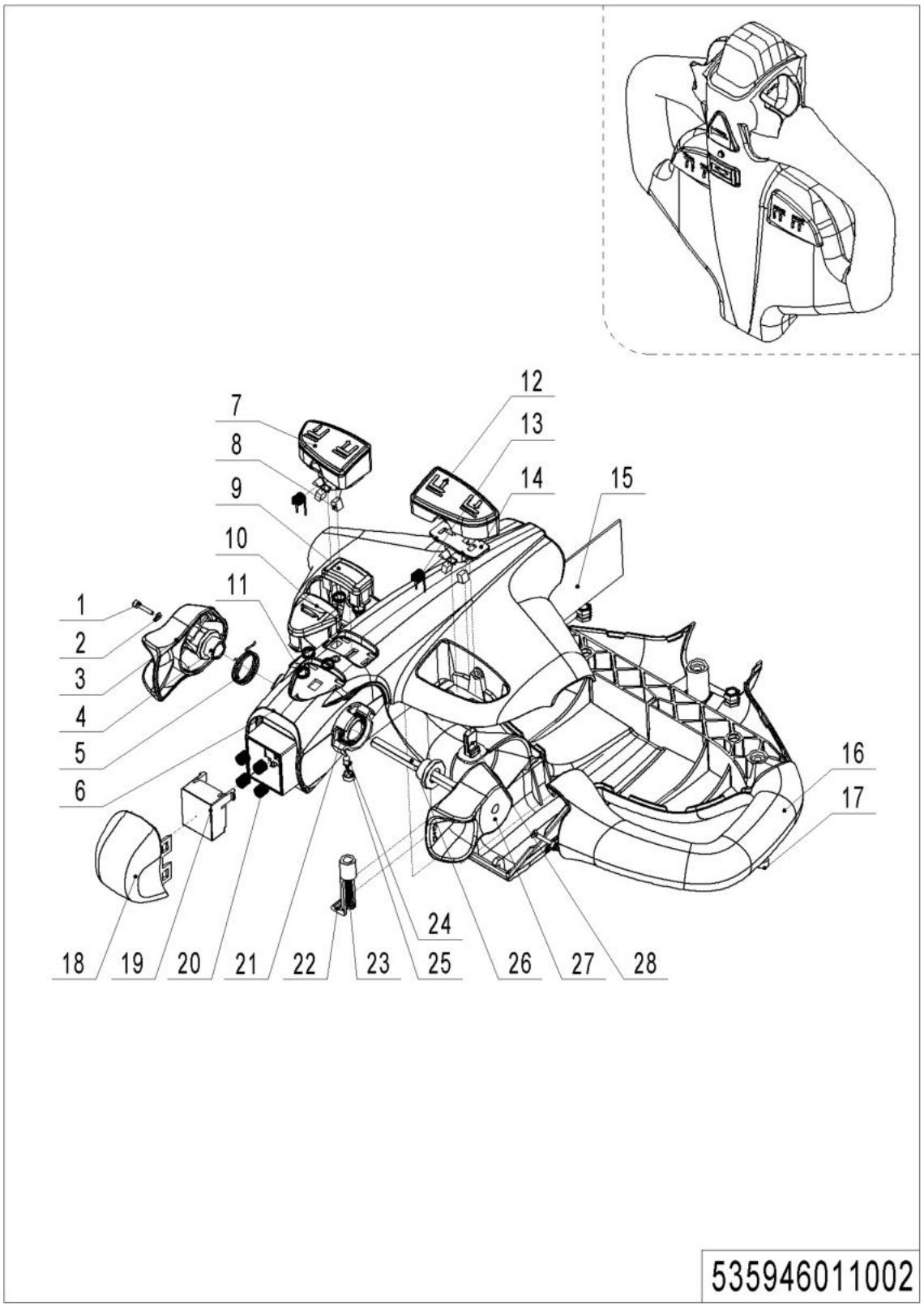

1= Supply as package. 2= Supply with constraints. 3= Phasing-out supply. 4= Supply as assembly. 5= Check other tables.

02 Control Handle (535946011002)

No.	Item Code	Mark	Item Description	Qty.	Substitute	Note
--	922100100001		Control handle	1		
1	505698520008		Screw	2		
2	505698520009		Washer	2		
3	505698520001		Traction lever	1		
4	505698520004		Sleeve	2		
5	505698520027		Torsional Spring	1		
6	505698520014		Handle Cap	1		
7	505698520016		Button cap	1		
8	505698520005		Magnet	4		
9	505698520021		Button Cap	1		
10	505698520002		Horn Button	1		
11	505698520003		Spring	5		
12	505698520022		Button Cap	1		
13	505698520018		Torsional Spring	2		
14	505698520017		Fixing Base	2		
15	505698520028		circuit Board	1		
16	505698520015		Handle Cap	1		
17	505698520007		Screw	3		
18	505698520020		Button Cap	1		
19	505698520019		Pedestal	1		
20	505698520006		Spring	4		
21	505698520026		Torsional Spring	1		
22	505698520012		Clamp	1		
23	505698520023		Screw	1		
24	505698520024		Light	1		
25	505698520025		Lamp Holder	1		
26	505698520011		Axle-Traction lever	1		
27	505698520010		Traction lever	1		
28	505698520013		Sensor	2		

03 Control Handle (EN1175-2020)(535946011010)

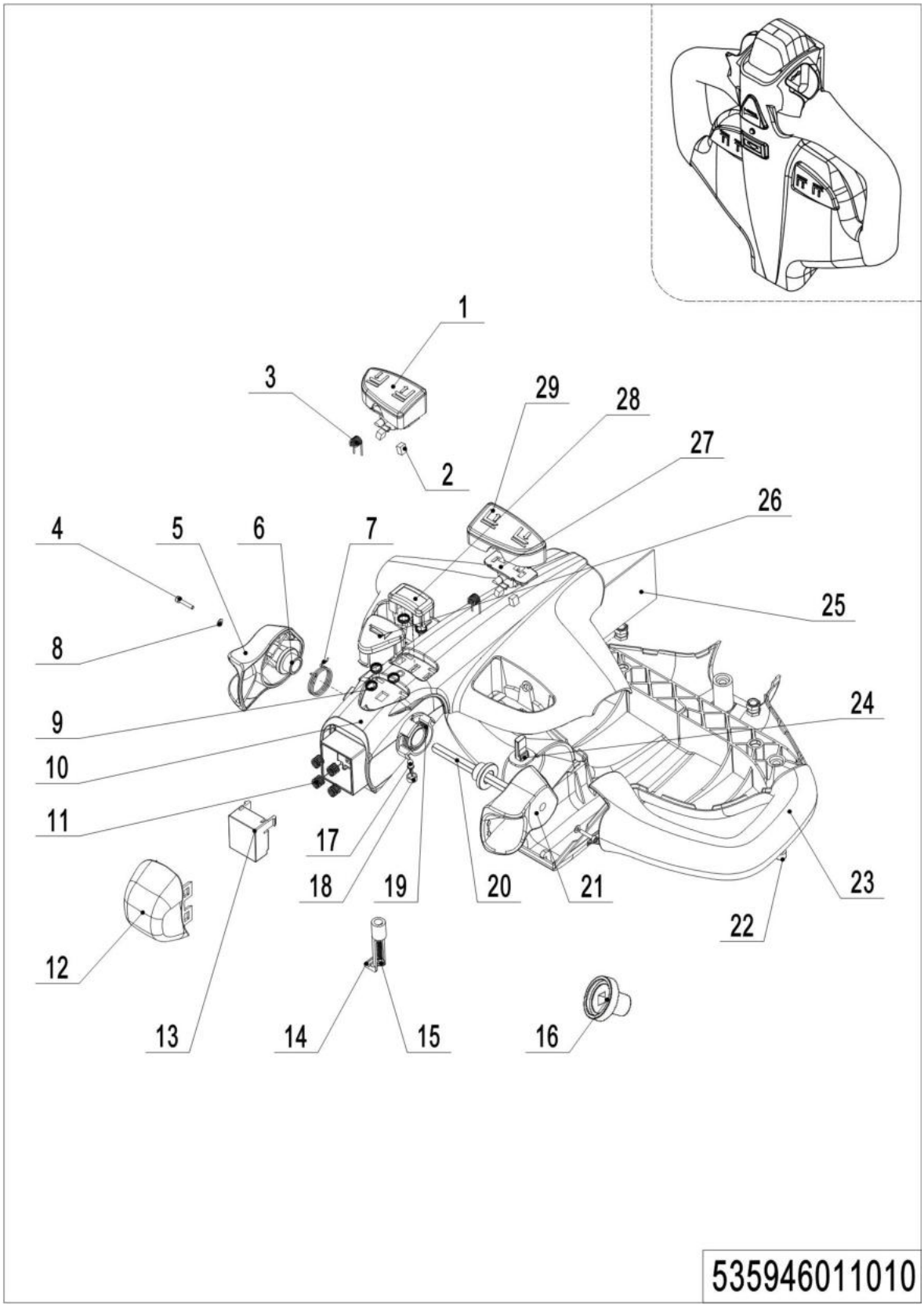

03 Control Handle(EN1175-2020) (535946011010)

No.	Item Code	Mark	Item Description	Qty.	Substitute	Note
--	922100100099		Control Handle(EN1175-2020)	1		
1	505698520016		Button cap	1		
2	505698520005		Magnet	4		
3	505698520018		Torsional Spring	2		
4	505698520008		Screw	2		
5	505698520001		Traction lever	1		
6	505698520004		Sleeve	2		
7	505698520027		Torsional Spring	1		
8	505698520009		Washer	2		
9	505698520003		Spring	5		
10	505698520099		Handle Cap	1		
11	505698520006		Spring	4		
12	505698520020		Button Cap	1		
13	505698520100		Pedestal	1		
14	505698520012		Clamp	1		
15	505698520023		Screw	1		
16	505698520102		Holder	2		
17	505698520024		Light	1		
18	505698520025		Light Holder	1		
19	505698520026		Torsional Spring	1		
20	505698520011		Axle-Traction lever	1		
21	505698520010		Traction lever	1		
22	505698520007		Screw	3		
23	505698520015		Handle Cap	1		
24	505698520013		Sensor	2		
25	505698520101		Circuit Board	1		
26	505698520002		Horn Button	1		
27	505698520017		Fixing Base	2		
28	505698520021		Button Cap	1		
29	505698520022		Button Cap	1		

04 Load Wheel (532946017001)

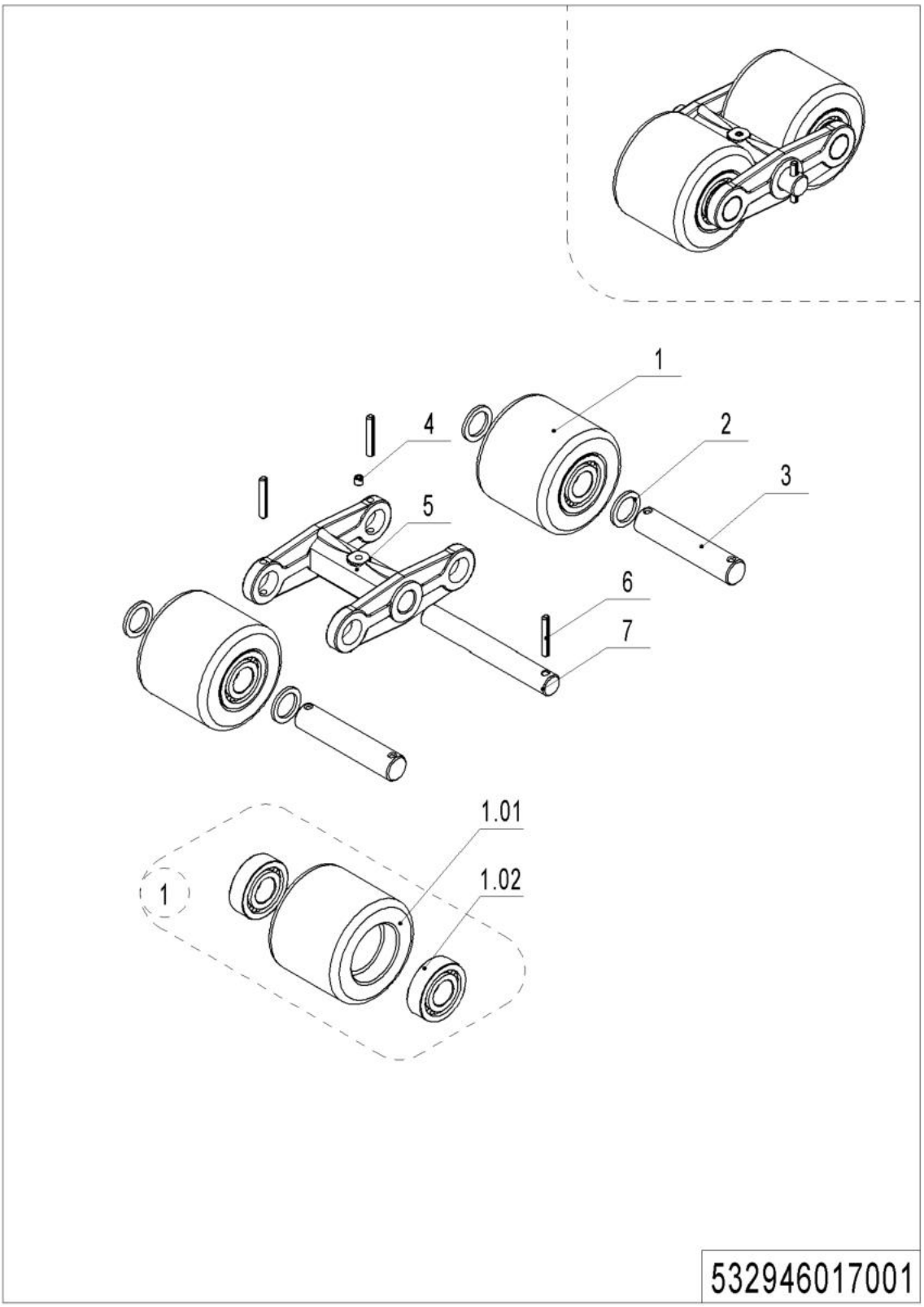

1= Supply as package. 2= Supply with constraints. 3= Phasing-out supply. 4= Supply as assembly. 5= Check other tables.

04 Load Wheel (532946017001)

No.	Item Code	Mark	Item Description	Qty.	Substitute	Note
--	532998510000		Wheel Assembly	2		
1	532998510001		Wheel	4		
1.01	940300300009		WheelΦ84x70	4		
1.02	910700200019		Bearing	8		
2	940600500004	1	Washer	8		
3	504117020005		Axle	4		
4	911200100001		Oil Cup	2		
5	504117020004		Wheel Carrier	2		
6	910600400027	1	Spring Pin	6		
7	504117020003		Axle	2		

05 Caster (534746016501)

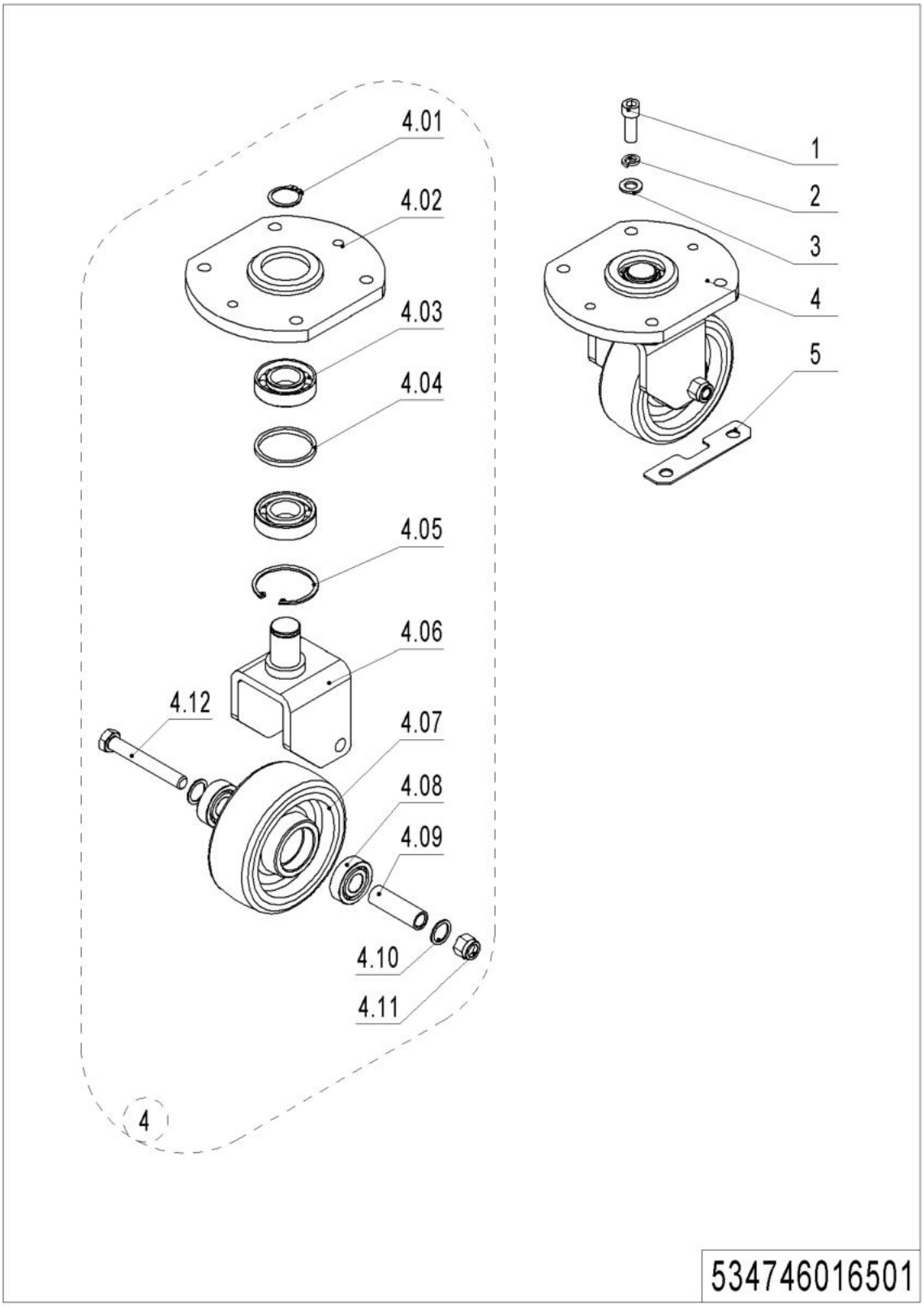

1= Supply as package. 2= Supply with constraints. 3= Phasing-out supply. 4= Supply as assembly. 5= Check other tables.

05 Caster (534746016501)

No.	Item Code	Mark	Item Description	Qty.	Substitute	Note
1	910200200099	1	Screw	4		
2	910400500008	1	Spring Washer	4		
3	910400100008	1	Flat Washer	4		
4	534716510002		Caster Assembly	1		
4.01	910401300016	1	Circlip	1		
4.02	534716510000		Bracket	1		
4.03	910700400004		Bearing	2		
4.04	532616520001	1	Check Ring	1		
4.05	910401400018	1	Circlip	1		
4.06	534716510001	2	Wheel Carrier	1		
4.07	940300300020		WheelΦ150x54	1		
4.08	910700200019		Bearing	2		
4.09	532616520003		Bushing	1		
4.10	940600500014	1	Washer	2		
4.11	910300500007	1	Nut	1		
4.12	910100100069	1	Bolt	1		
5	534721520026		Subplate	6		

Chapter 6: Electrical Parts

01 Display Assembly (535946010001)

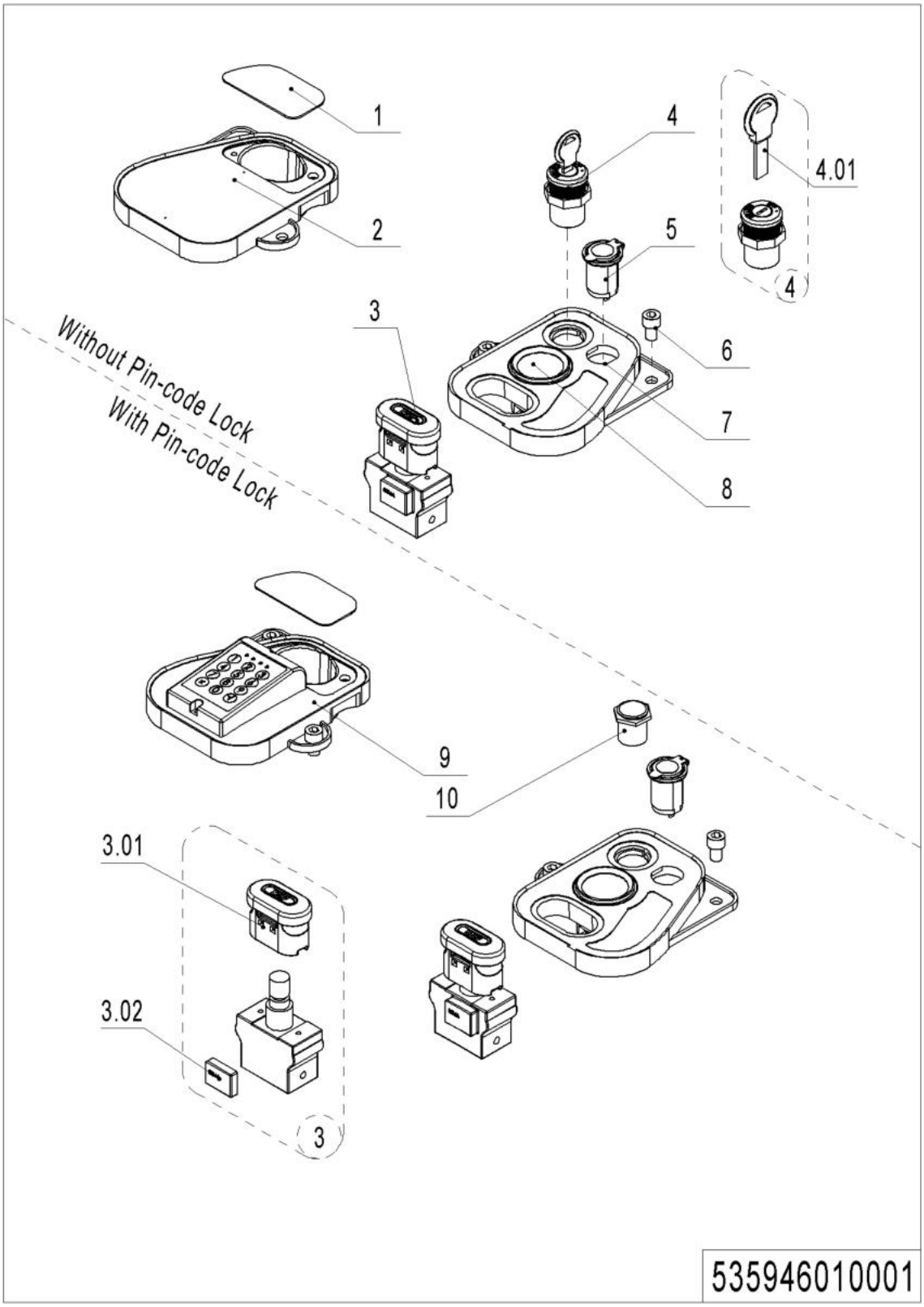

01 Display Assembly (535946010001)

No.	Item Code	Mark	Item Description	Qty.	Substitute	Note
1	535910020003		Close Plate	1		**External charger**
2	535910020002		Bezel	1		
3	920200100009		Emergency Button	1		
3.01	920200100010		Emergency Button	1		
3.02	920200100012		Emergency Button	1		
4	505634010000		Key Switch	1		
4.01	920200200001		Key Switch	1		
5	206033010036		USB interface	1		
6	910200200074	1	Screw	4		
7	535910020001		Bezel	1		
8	921100100012		Display	1		**MDI**
8	921100100049		Display	1		**D13L**
9	920200200014		Pin-code Lock	1		
10	506734010000		Button	1		

02 Display Assembly(EN1175-2020) (535946010003)

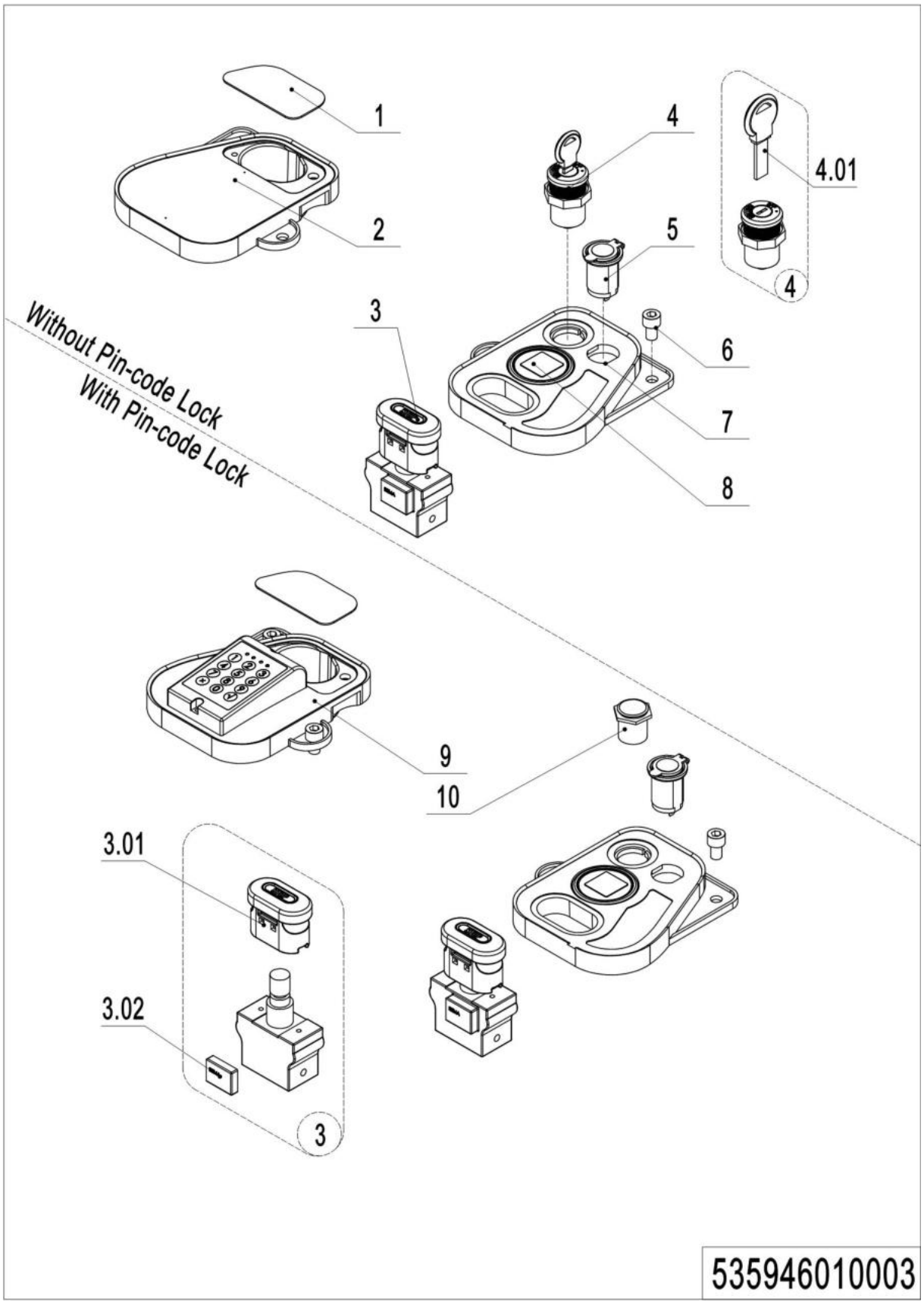

1= Supply as package. 2= Supply with constraints. 3= Phasing-out supply. 4= Supply as assembly. 5= Check other tables.

02 Display Assembly(EN1175-2020) (535946010003)

No.	Item Code	Mark	Item Description	Qty.	Substitute	Note
1	535910020003		Close Plate	1		**External charger**
2	535910020002		Bezel	1		
3	920200100009		Emergency Button	1		
3.01	920200100010		Emergency Button	1		
3.02	920200100012		Emergency Button	1		
4	505634010000		Key Switch	1		
4.01	920200200012		Key	1		
5	206033010036		USB interface	1		
6	910200200074	1	Screw	4		
7	535910020001		Bezel	1		
8	921100100116		Display	1		**EN1175-2020**
9	920200200014		Pin-code Lock	1		
10	506734010000		Button	1		

03 Wire Harness (535946033001)

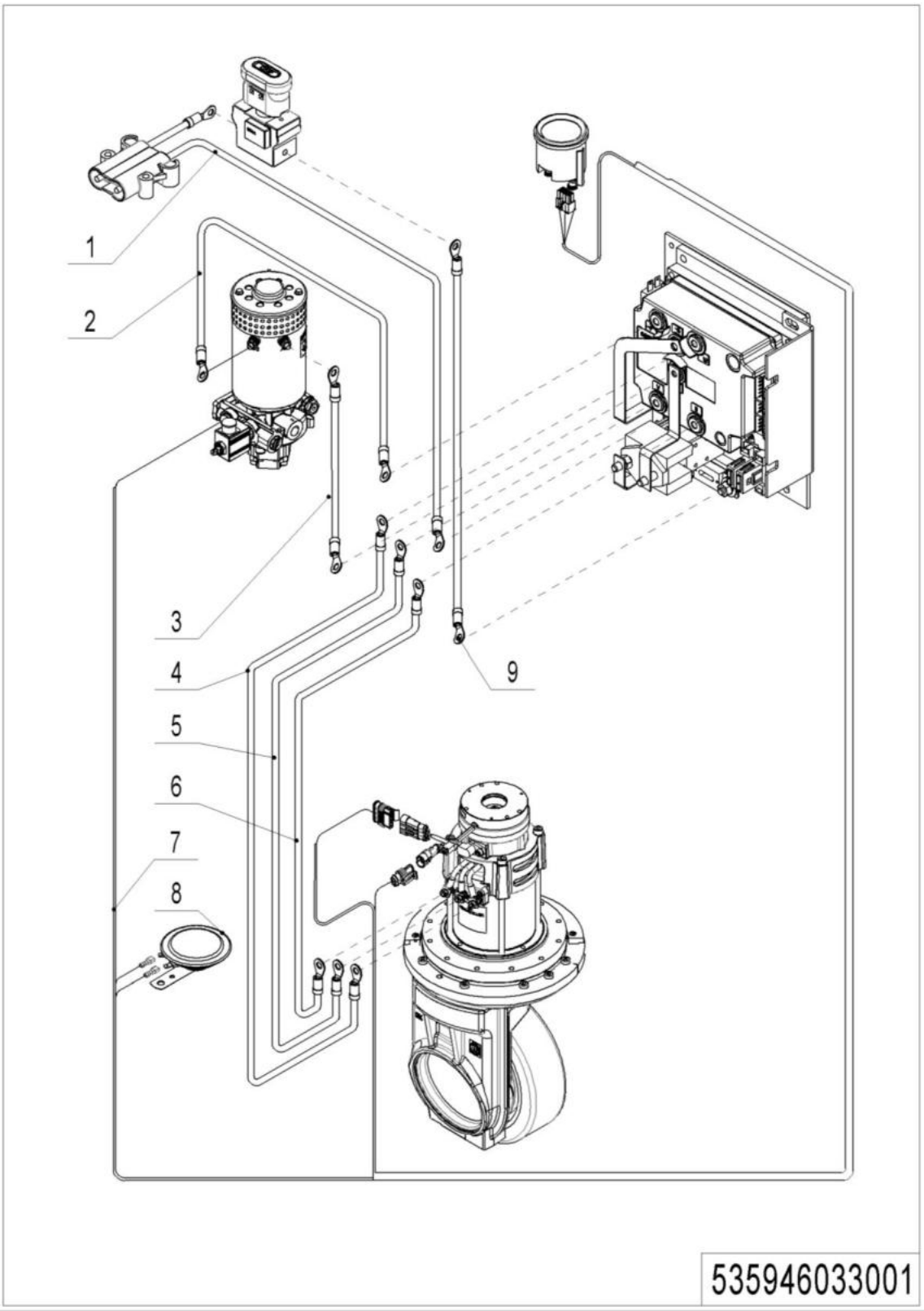

1= Supply as package. 2= Supply with constraints. 3= Phasing-out supply. 4= Supply as assembly. 5= Check other tables.

03 Wire Harness (535946033001)

No.	Item Code	Mark	Item Description	Qty.	Substitute	Note
1	535933010008		Wire Harness	1		
2	535933010007		Cable	1		
3	535933010006		Cable	1		
4	535933010005		Cable	1		
5	535933010004		Cable	1		
6	535933010003		Cable	1		
7	535933010000		Wire Harness	1		
8	920500100001		Horn	1		
9	535933010009		Cable	1		

04 Wire Harness (EN175-2020)(535946033011)

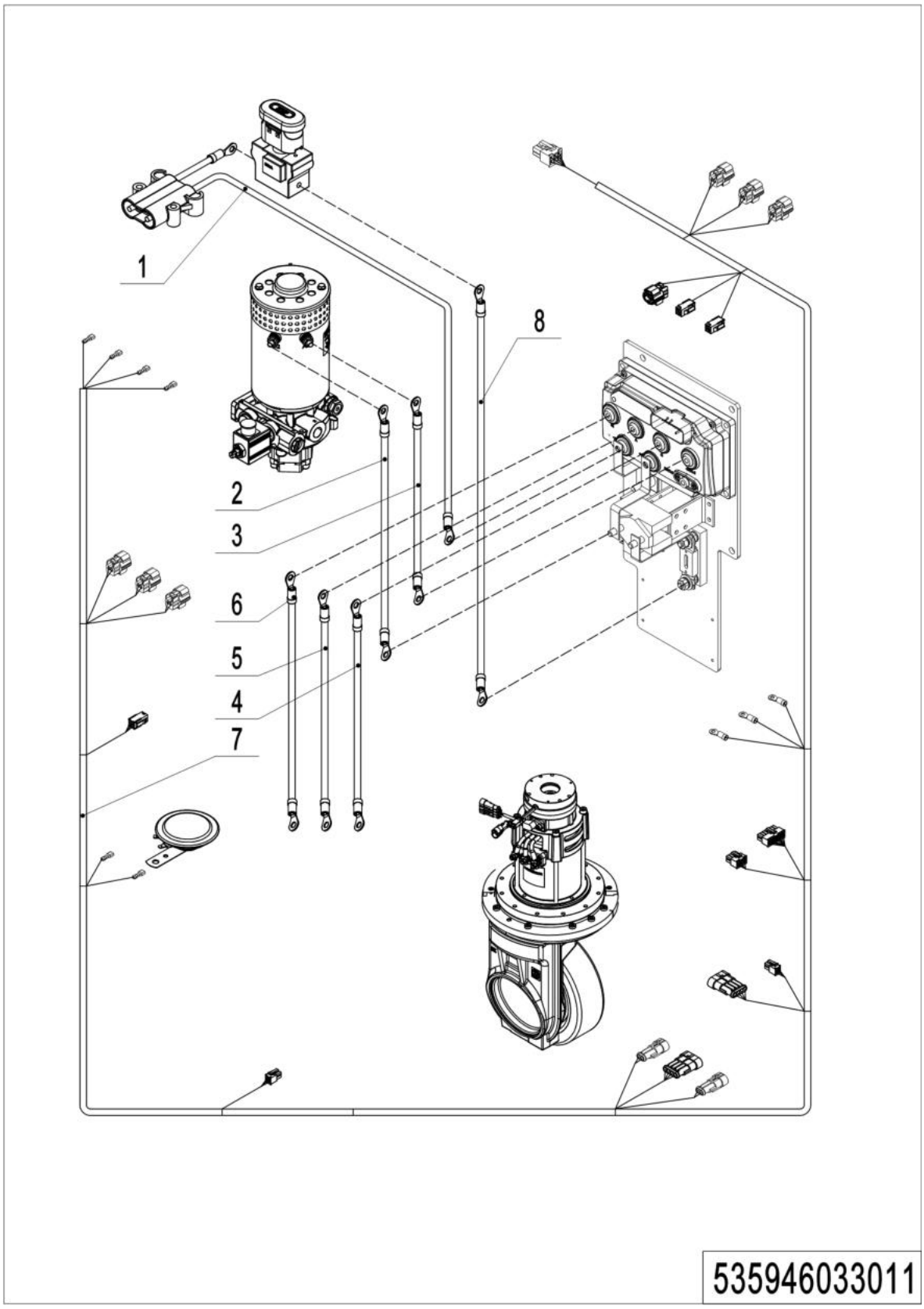

1= Supply as package. 2= Supply with constraints. 3= Phasing-out supply. 4= Supply as assembly. 5= Check other tables.

04 Wire Harness(EN1175-2020)(535946033011)

No.	Item Code	Mark	Item Description	Qty.	Substitute	Note
1	535933010008		Wire Harness	1		铅酸
2	562633010008		Cable	1		
3	562633010009		Cable	1		
4	562633010004		Cable	1		
5	562633010005		Cable	1		
6	562633010006		Cable	1		
7	535933010037		Wire Harness	1		
8	562633010007		Cable	1		

05 Wire Harness (Power Steering) (535946033002)

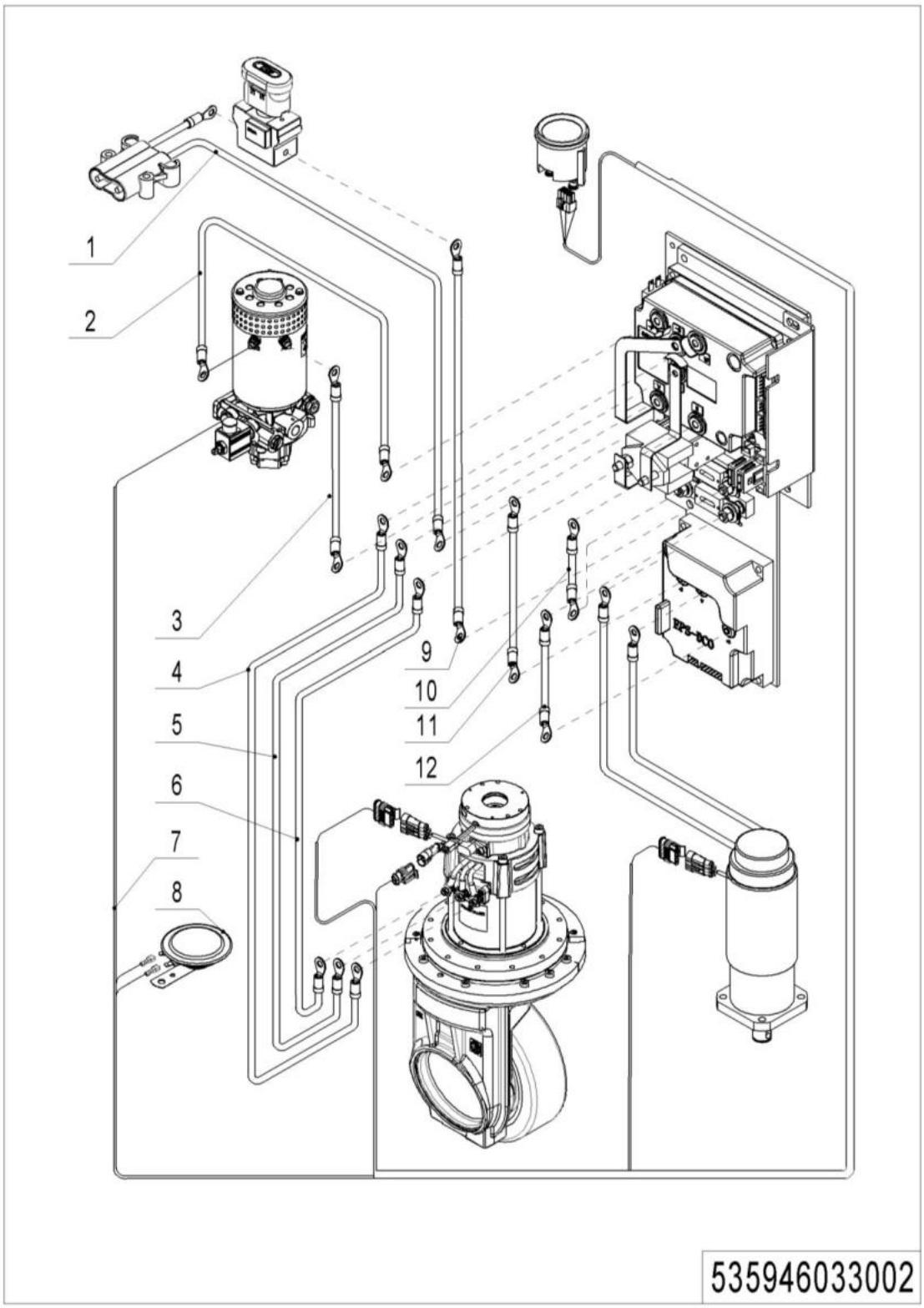

1= Supply as package. 2= Supply with constraints. 3= Phasing-out supply. 4= Supply as assembly. 5= Check other tables.

05 Wire Harness (Power Steering) (535946033002)

No.	Item Code	Mark	Item Description	Qty.	Substitute	Note
1	535933010008		Wire Harness	1		
2	535933010007		Cable	1		
3	535933010006		Cable	1		
4	535933010005		Cable	1		
5	535933010004		Cable	1		
6	535933010003		Cable	1		
7	535933010001		Wire Harness	1		
8	920500100001		Horn	1		
9	535933010009		Cable	1		
10	535933010014		Cables	1		
11	535933010016		Cables	1		
12	535933010015		Cables	1		

06 Wire Harness (Power Steering,EN1175-2020) (535946033012)

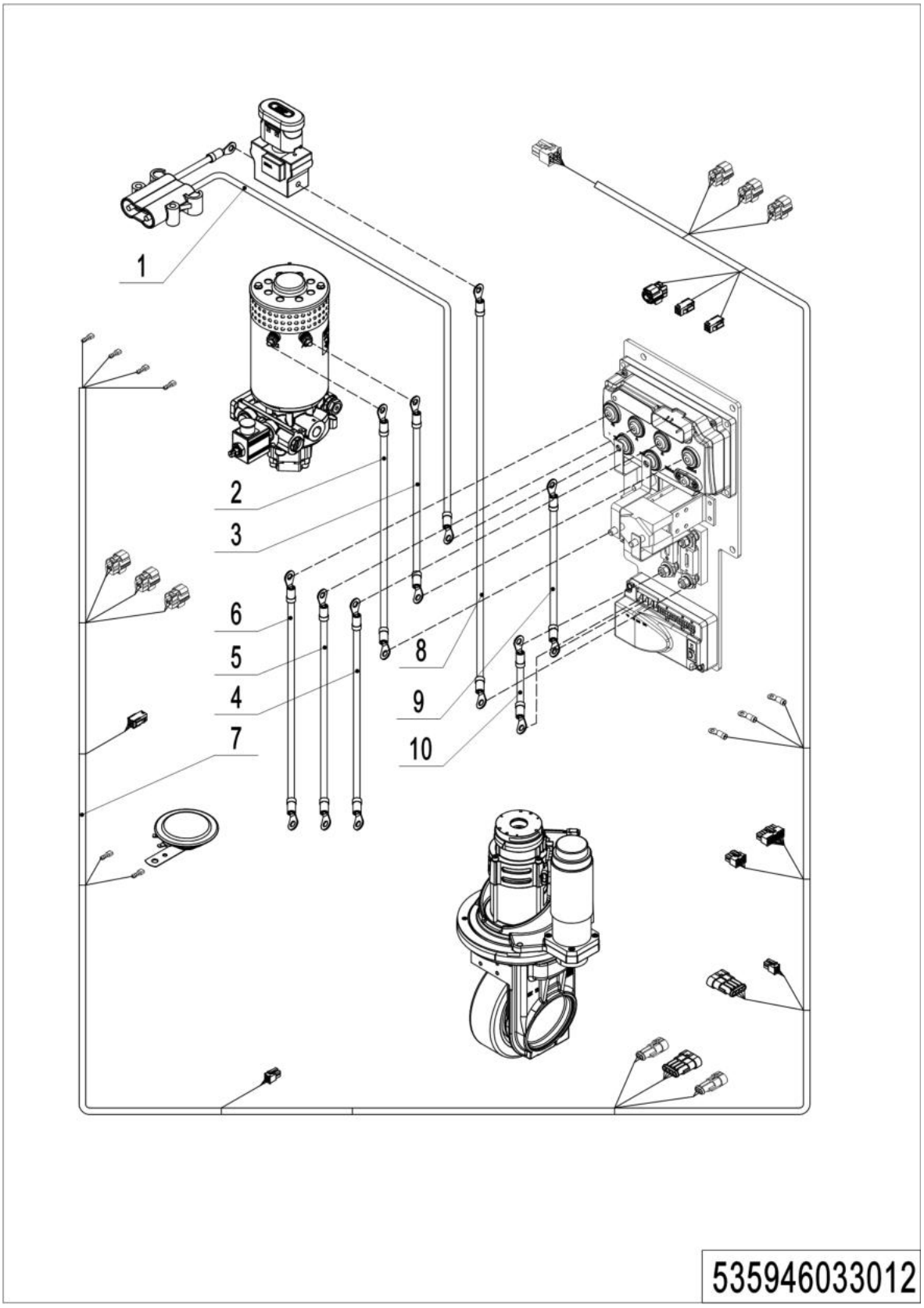

1= Supply as package. 2= Supply with constraints. 3= Phasing-out supply. 4= Supply as assembly. 5= Check other tables.

06 Wire Harness (Power Steering,EN1175-2020) (535946033012)

No.	Item Code	Mark	Item Description	Qty.	Substitute	Note
1	535933010008		Wire Harness	1		
1	535933010021		Wire Harness	1		**Li battery**
2	562633010008		Cable	1		
3	562633010009		Cable	1		
4	562633010004		Cable	1		
5	562633010005		Cable	1		
6	562633010006		Cable	1		
7	535933010038		Wire Harness	1		
8	562633010007		Cable	1		
9	562633010017		Cables	1		
10	562633010014		Cables	1		

07 Controller Assembly (535946033003)

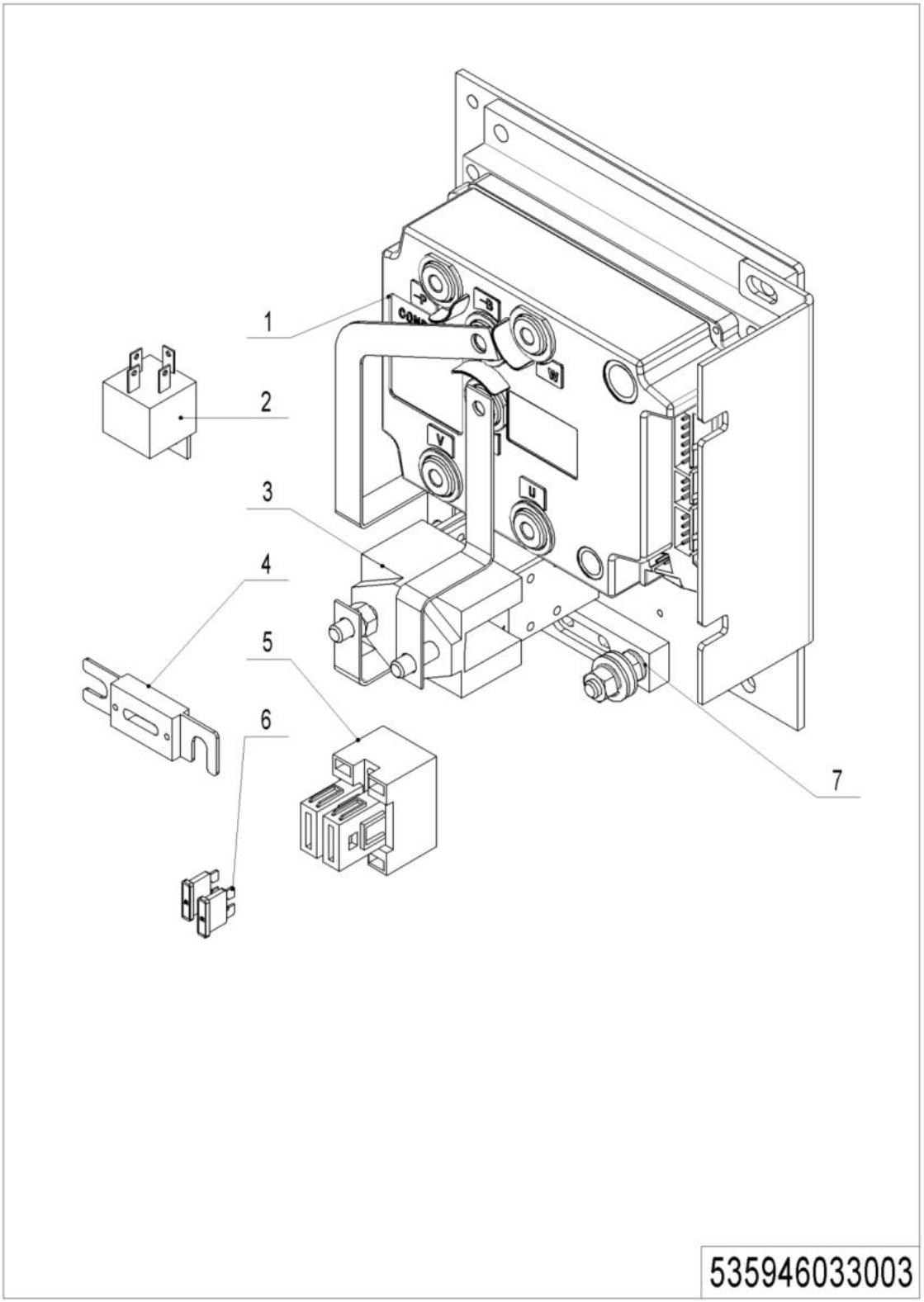

1= Supply as package. 2= Supply with constraints. 3= Phasing-out supply. 4= Supply as assembly. 5= Check other tables.

07 Controller Assembly (535946033003)

No.	Item Code	Mark	Item Description	Qty.	Substitute	Note
1	921400100048		Controller	1		
2	920800100001		Relay	1		
3	920700100002		Contactor	1		
4	920100100013		Fuse	1		
5	920100400005		Fuse Holder	1		
6	920100200002		Fuse	2		
7	920100400002		Fuse Holder	1		

08 Electronic Components (EN1175-2020)(535946033013)

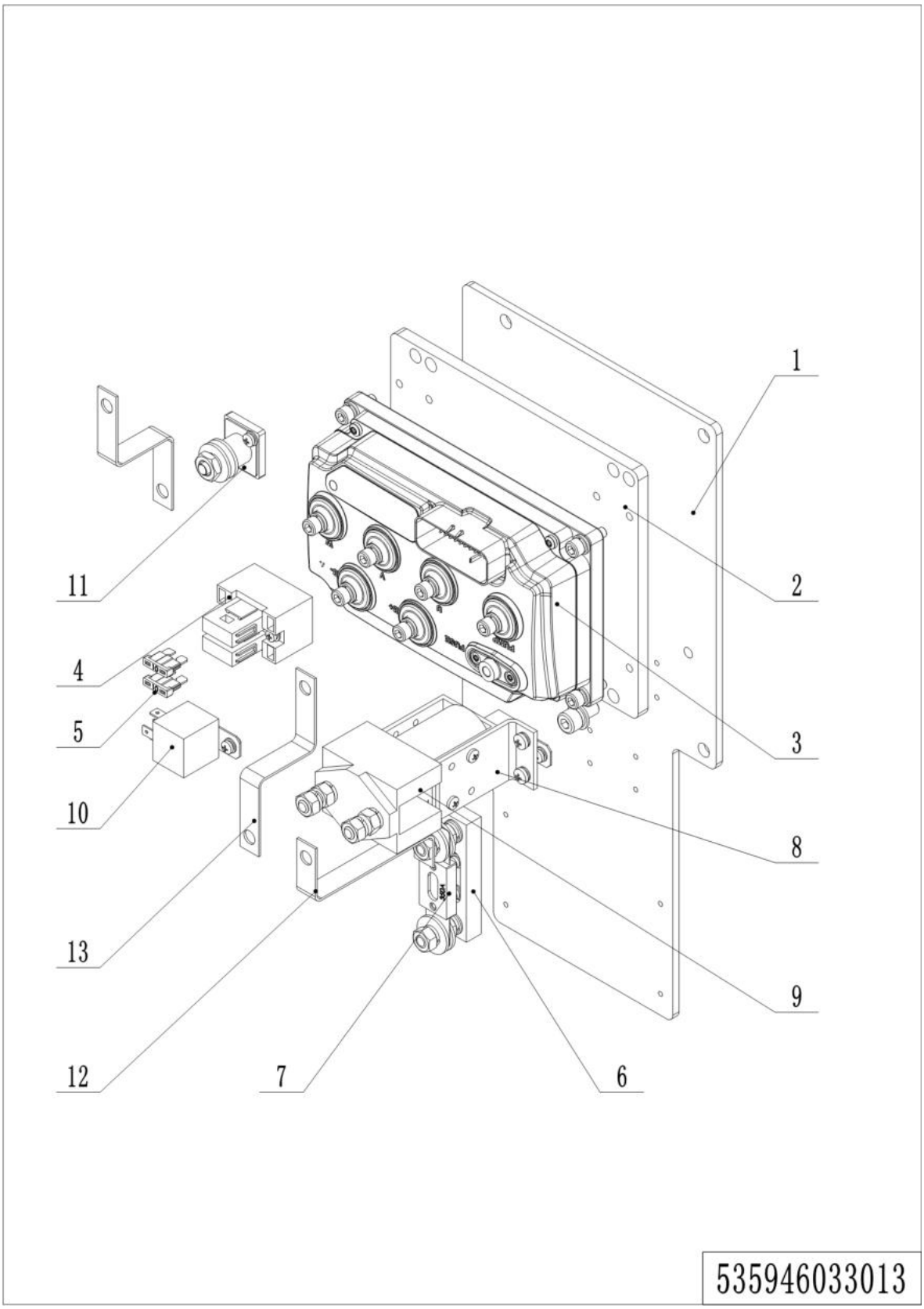

1= Supply as package. 2= Supply with constraints. 3= Phasing-out supply. 4= Supply as assembly. 5= Check other tables.

08 Electronic Components (EN1175-2020)(535946033013)

No.	Item Code	Mark	Item Description	Qty.	Substitute	Note
1	562633020002		Mounting Plate	1		
2	534733020003		Mounting Plate	1		
3	921400100124		Controller	1		
4	920100400005		Fuse Holder	1		
5	920100100001		Fuse	2		
6	920100400002		Fuse Holder	1		
7	920100100013		Fuse	1		
8	921300400004		Fixing Mount	1		
9	920700100002		Contactor	1		
10	920800100001		Relay	1		
11	920100400001		Fuse Holder	1		
12	535933020004		Copper Busbar	1		
13	535933020006		Copper Busbar	2		

09 Controller Assembly (Power Steering) (535946033004)

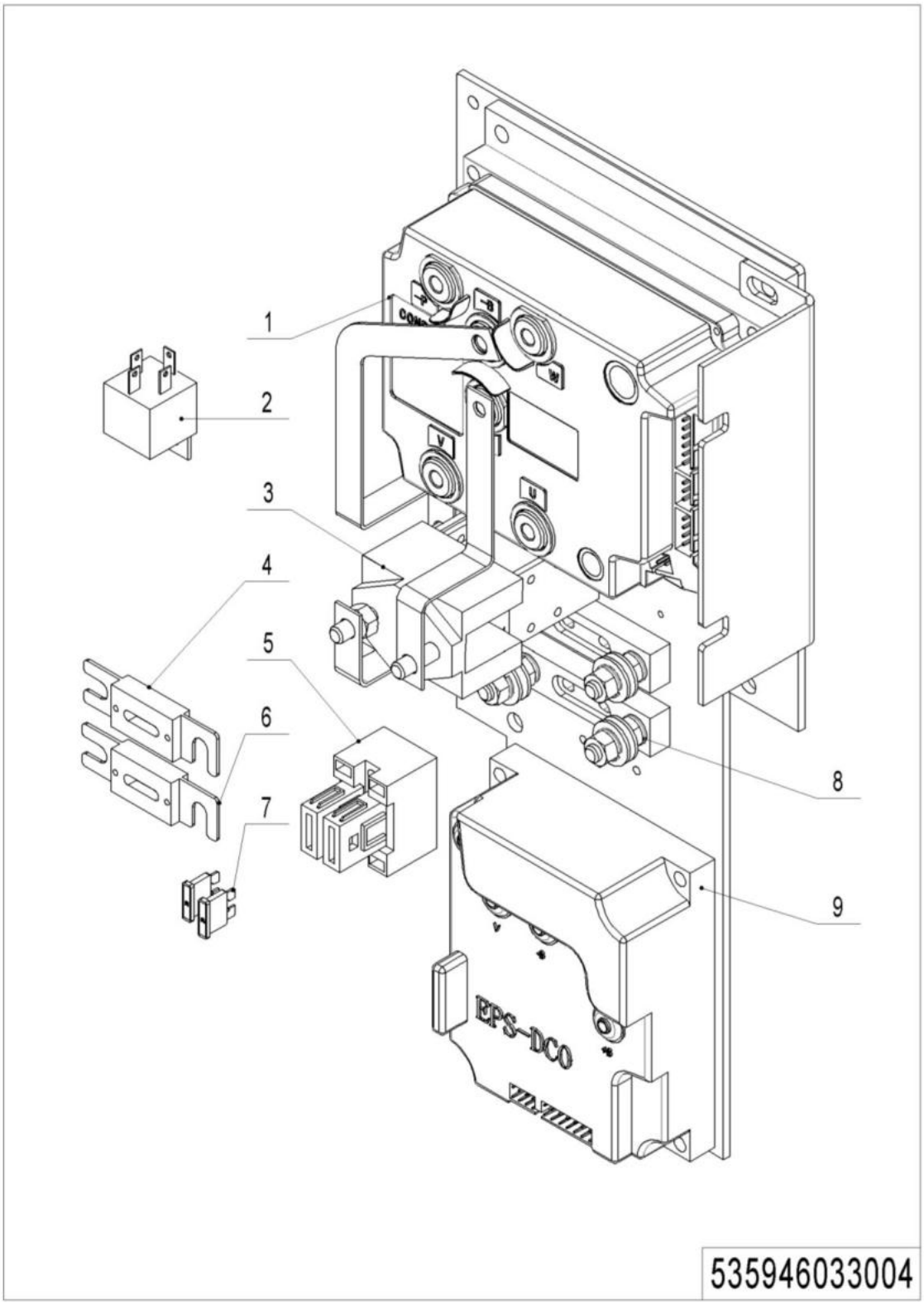

09 Controller Assembly (Power Steering) (535946033004)

No.	Item Code	Mark	Item Description	Qty.	Substitute	Note
1	921400100048		Controller	1		
2	920800100001		Relay	1		
3	920700100002		Contactor	1		
4	920100100013		Fuse	1		
5	920100400005		Fuse Holder	1		
6	920100100001		Fuse	1		
7	920100200002		Fuse	2		
8	920100400002		Fuse Holder	2		
9	921400100030		Controller	1		

10 Electronic Components (EPS,EN1175-2020)(535946033014)

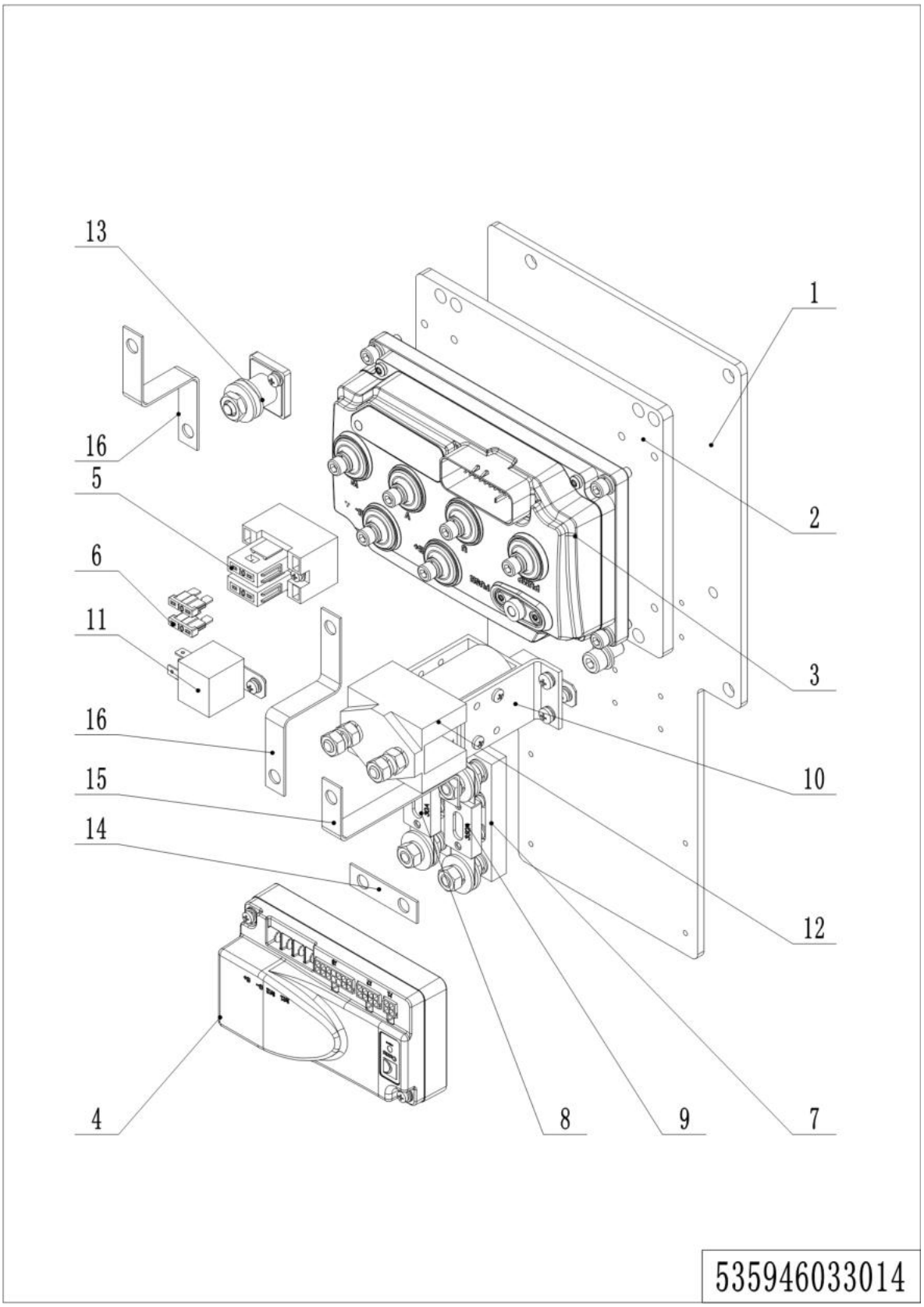

1= Supply as package. 2= Supply with constraints. 3= Phasing-out supply. 4= Supply as assembly. 5= Check other tables.

10 Electronic Components(EPS,EN1175-2020)(535946033014)

No.	Item Code	Mark	Item Description	Qty.	Substitute	Note
1	562633020001		Mounting Plate	1		
2	534733020003		Mounting Plate	1		
3	921400100124		Controller	1		
4	921400100077		Controller	1		
5	920100400005		Fuse Holder	1		
6	920100200002		Fuse	2		
7	920100400002		Fuse Holder	2		
8	920100100001		Fuse	1		
9	920100100013		Fuse	1		
10	921300400004		Fixing Mount	1		
11	920700100002		Contactor	1		
12	920800100001		Relay	1		
13	920100400001		Fuse Holder	1		
14	505633020003		Copper Busbar	1		
15	535933020004		Copper Busbar	1		
16	535933020006		Copper Busbar	2		

11 Charger (535646036501)

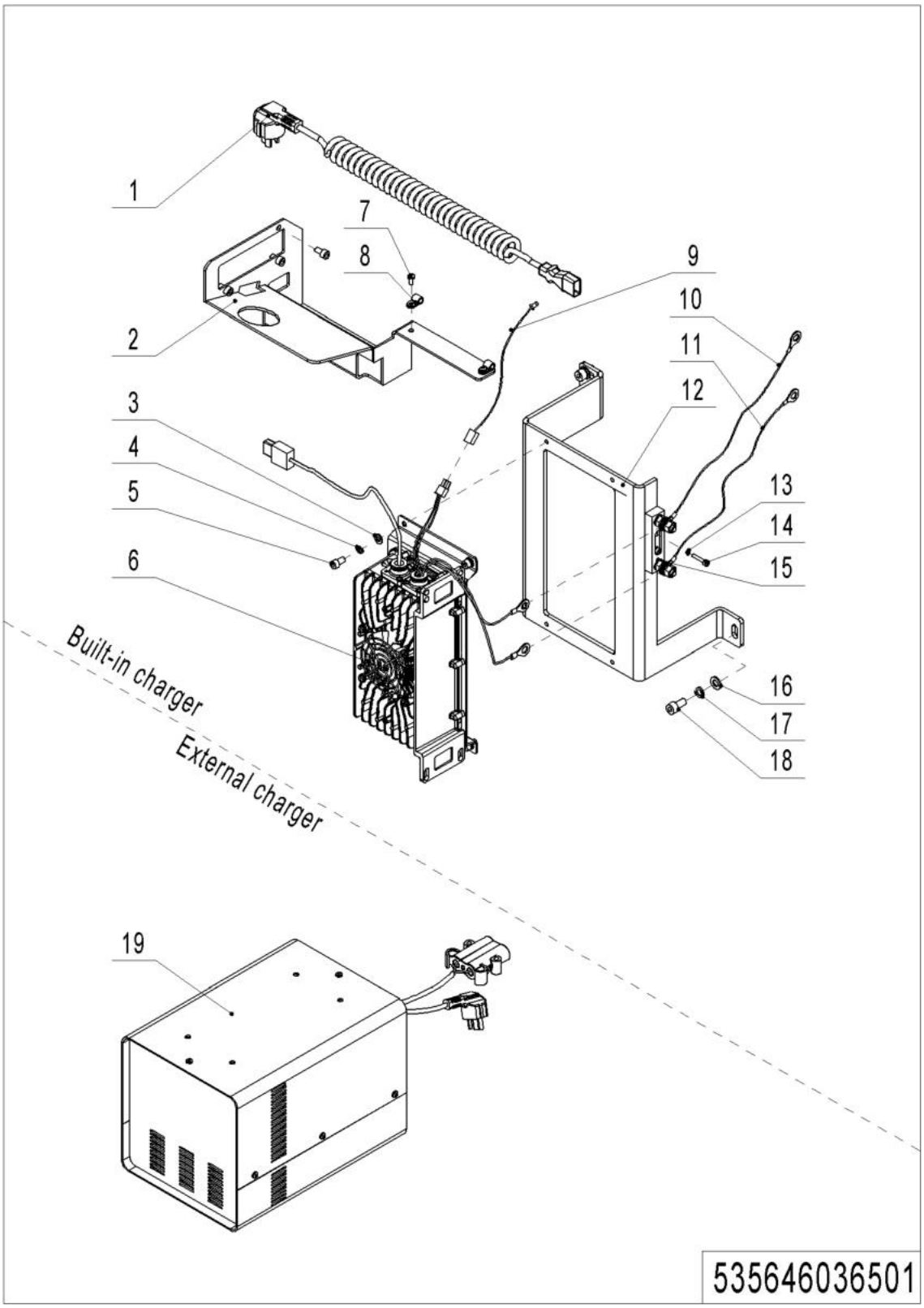

11 Charger (535646036501)

No.	Item Code	Mark	Item Description	Qty.	Substitute	Note
1	921500200008		Spring Cable(Asia)	1		
1	921500200005		Spring Cable(EU)	1		
1	921500200003		Spring Cable(AUS)	1		
1	921500200004		Spring Cable(ENG)	1		
1	921500200031		Spring Cable(USA)	1		
1	921500200037		Spring Cable(ARG)	1		
2	535936510001		Baffle	1		
3	910400100005	1	Flat Washer	4		
4	910400500005	1	Spring Washer	4		
5	910200200033	1	Screw	7		
6	921000100034		Charger24V25A	1		
7	910200500021	1	Screw	2		
8	921300200001		Cable Clamp	2		
9	922000100020		Lamp	1		
10	535933010012		Cables	1		
11	535933010013		Cables	1		
12	535936520001		Mounting Plate	1		
13	910400500003	1	Spring Washer	2		
14	910200200016	1	Screw	2		
15	920100400002		Fuse Holder	1		
16	910400100006	1	Flat Washer	3		
17	910400500006	1	Spring Washer	3		
18	910200200055	1	Screw	3		
19	921000200013		Charger24V25A(Aisa-CHN)	1		
19	921000200014		Charger24V25A(Aisa-ENG)	1		
19	921000200015		Charger24V25A(EU)	1		
19	921000200016		Charger24V25A(AUS)	1		
19	921000200017		Charger24V25A(ENG)	1		
19	921000200018		Charger24V25A(USA)	1		
19	921000200282		Charger24V25A(Aisa-CHN)	1		

11 Charger (535646036501) Continuation

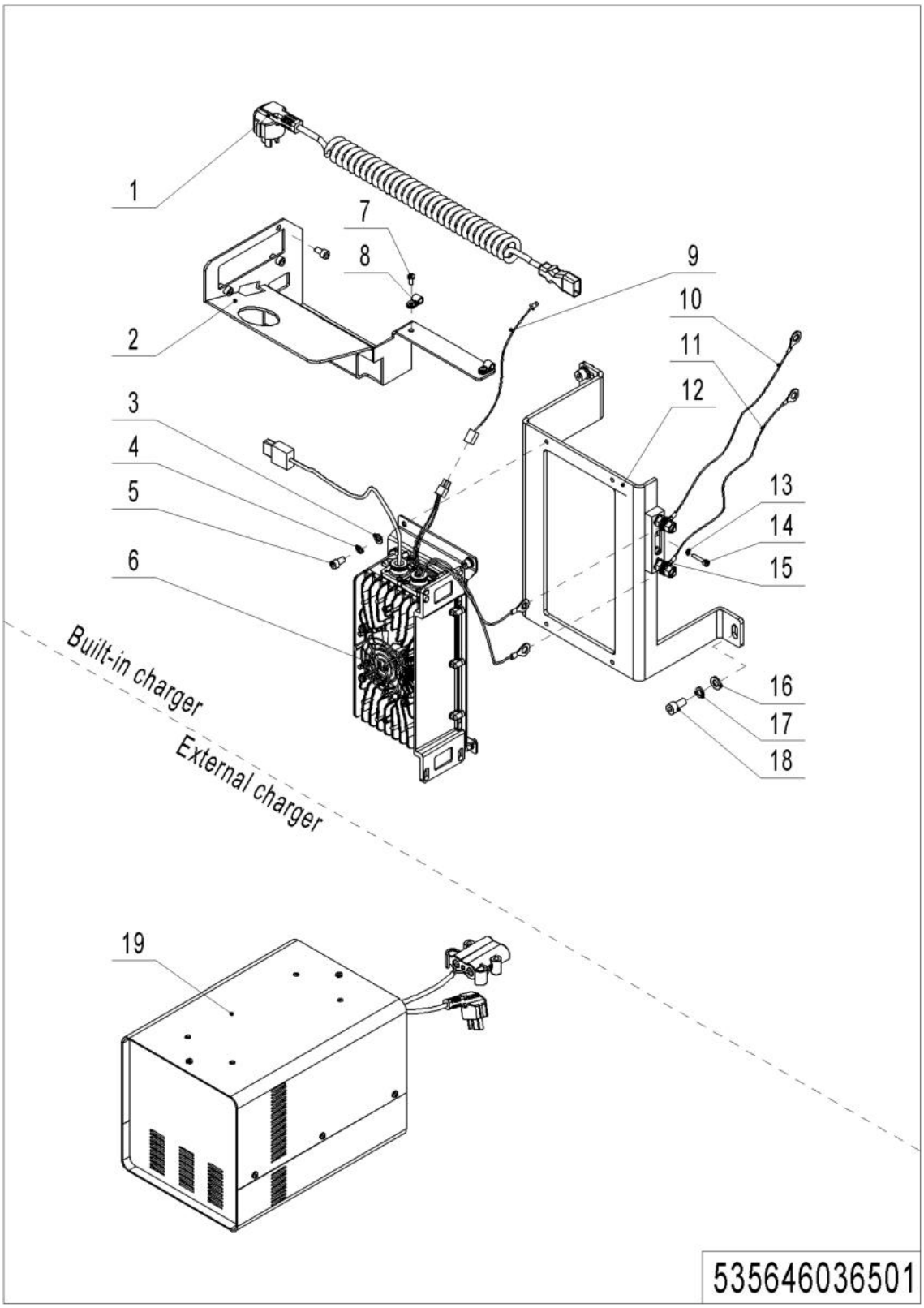

11 Charger (535646036501) Continuation

No.	Item Code	Mark	Item Description	Qty.	Substitute	Note
19	921000200288		Charger24V25A(Aisa-ENG)	1		
19	921000200292		Charger24V25A(EU)	1		
19	921000200300		Charger24V25A(AUS)	1		
19	921000200296		Charger24V25A(ENG)	1		
19	921000200304		Charger24V25A(USA)	1		

12 Traction Battery (534446037001)

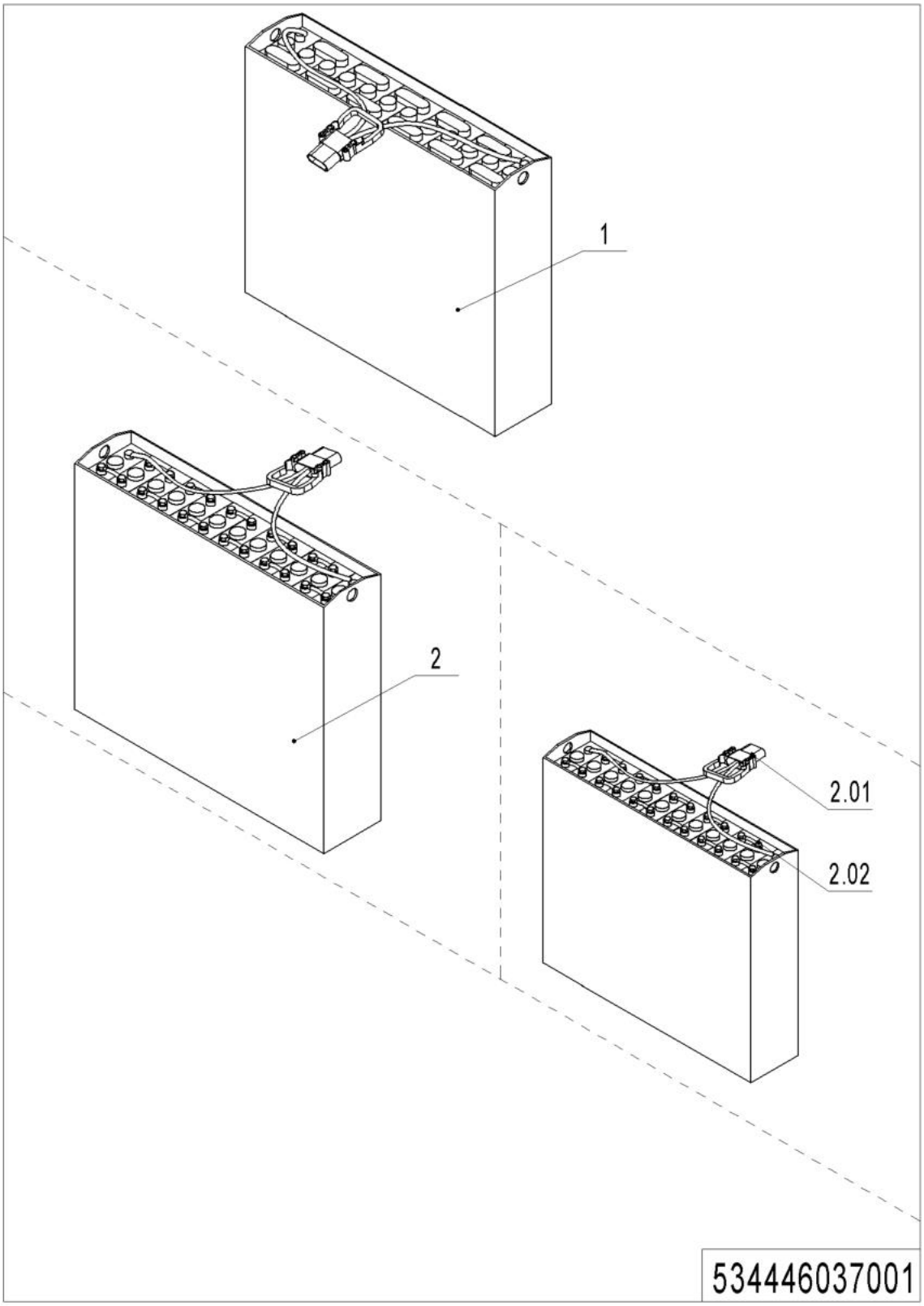

12 Traction Battery (534446037001)

No.	Item Code	Mark	Item Description	Qty.	Substitute	Note
1	535637010002		Battery24V160Ah(welded)	1		
1	534437010000		Battery24V180Ah(welded)	1		
2	535637010001		Battery24V160Ah	1		
2	534437010001		Battery24V180Ah	1		
2.01	920400100007		Connector	1		**For all battery**
2.02	505698520000		Bolt	24		**For bolted battery**

Chapter 7: Special Parts

01 Load Backrest (532646040501)

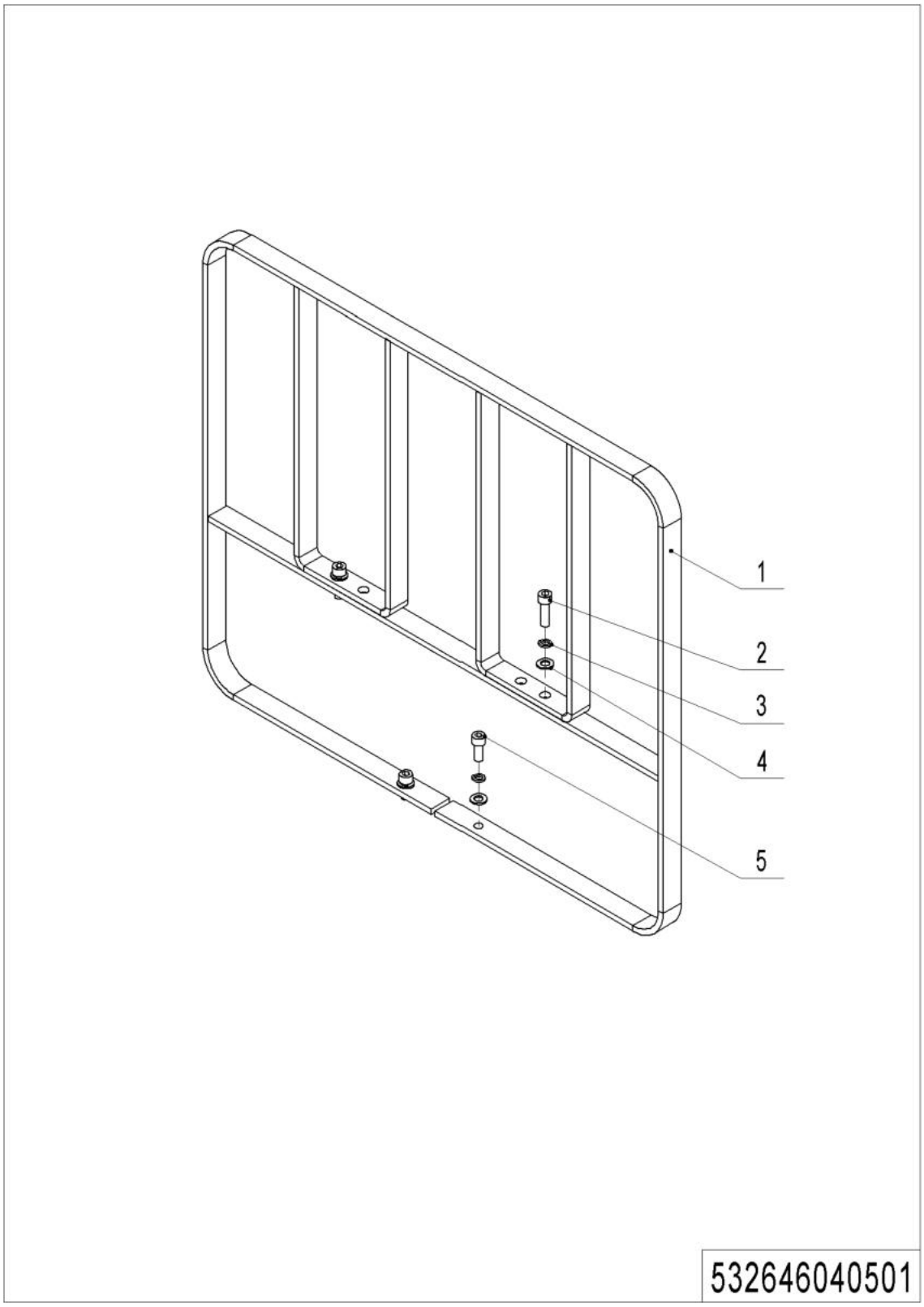

1= Supply as package. 2= Supply with constraints. 3= Phasing-out supply. 4= Supply as assembly. 5= Check other tables.

01 Load Backrest (532646040501)

No.	Item Code	Mark	Item Description	Qty.	Substitute	Note
1	532640510001	2	Load Backrest	1		
2	910200200076	1	Screw	2		
3	910400500007	1	Spring Washer	4		
4	910400100007	1	Flat Washer	4		
5	910200200078	1	Screw	2		

Chapter 8: Others

01 Label and Decal (EU) (535646047001)

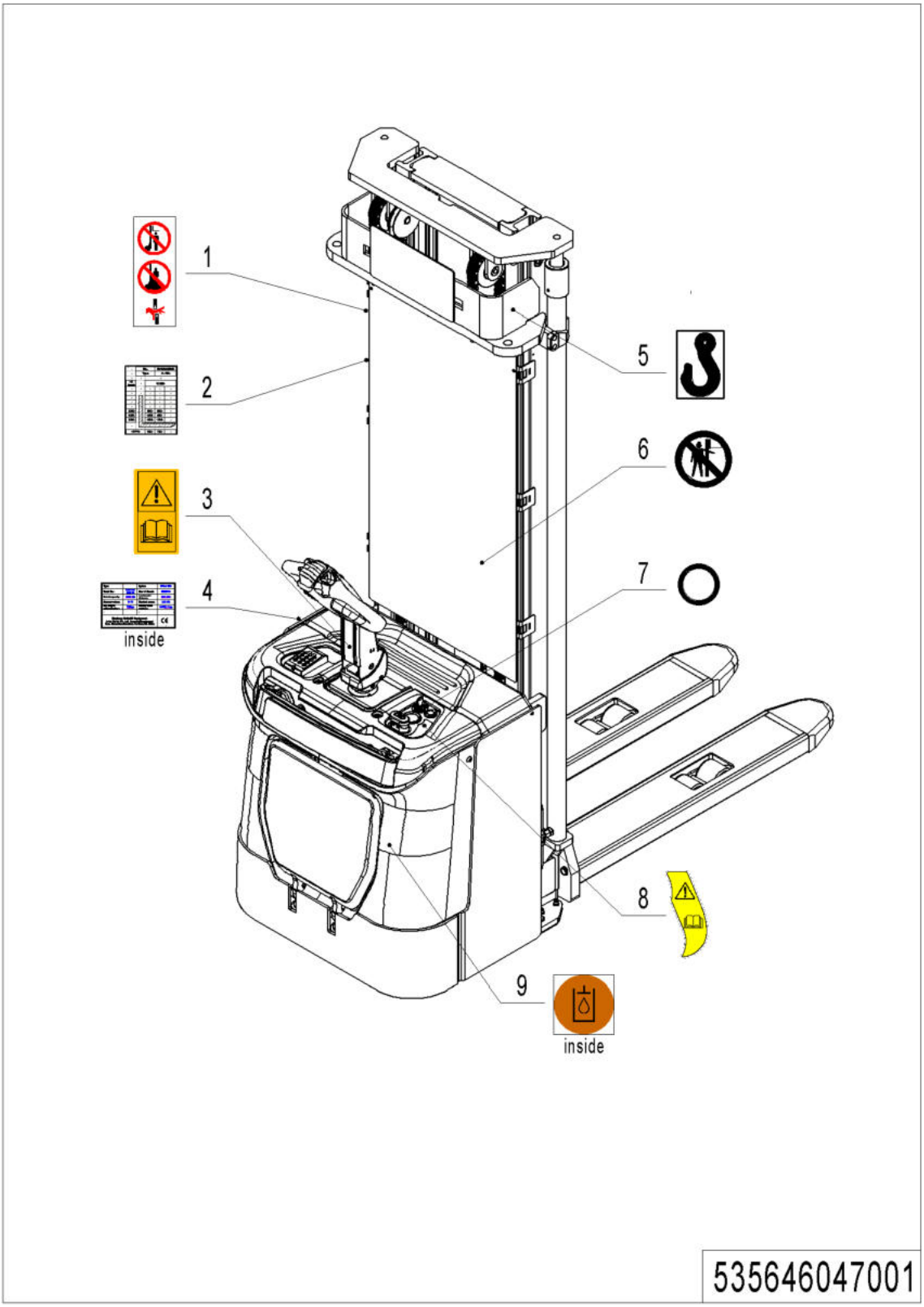

1= Supply as package. 2= Supply with constraints. 3= Phasing-out supply. 4= Supply as assembly. 5= Check other tables.

01 Label and Decal (EU) (535646047001)

No.	Item Code	Mark	Item Description	Qty.	Substitute	Note
1	941200100004		Label	2		
2	535647520000		Load Capacity Diagram	1		
3	941200300002		Label	1		
4	535647520001		Truck data plate	1		
5	941200300001		Label	2		
6	941200100006		Label	1		
7	941200400013		Label	1		
8	941200300018		Label	1		
9	941200300003		Label	1		

Appendix

01 Electrical Circuit Diagram

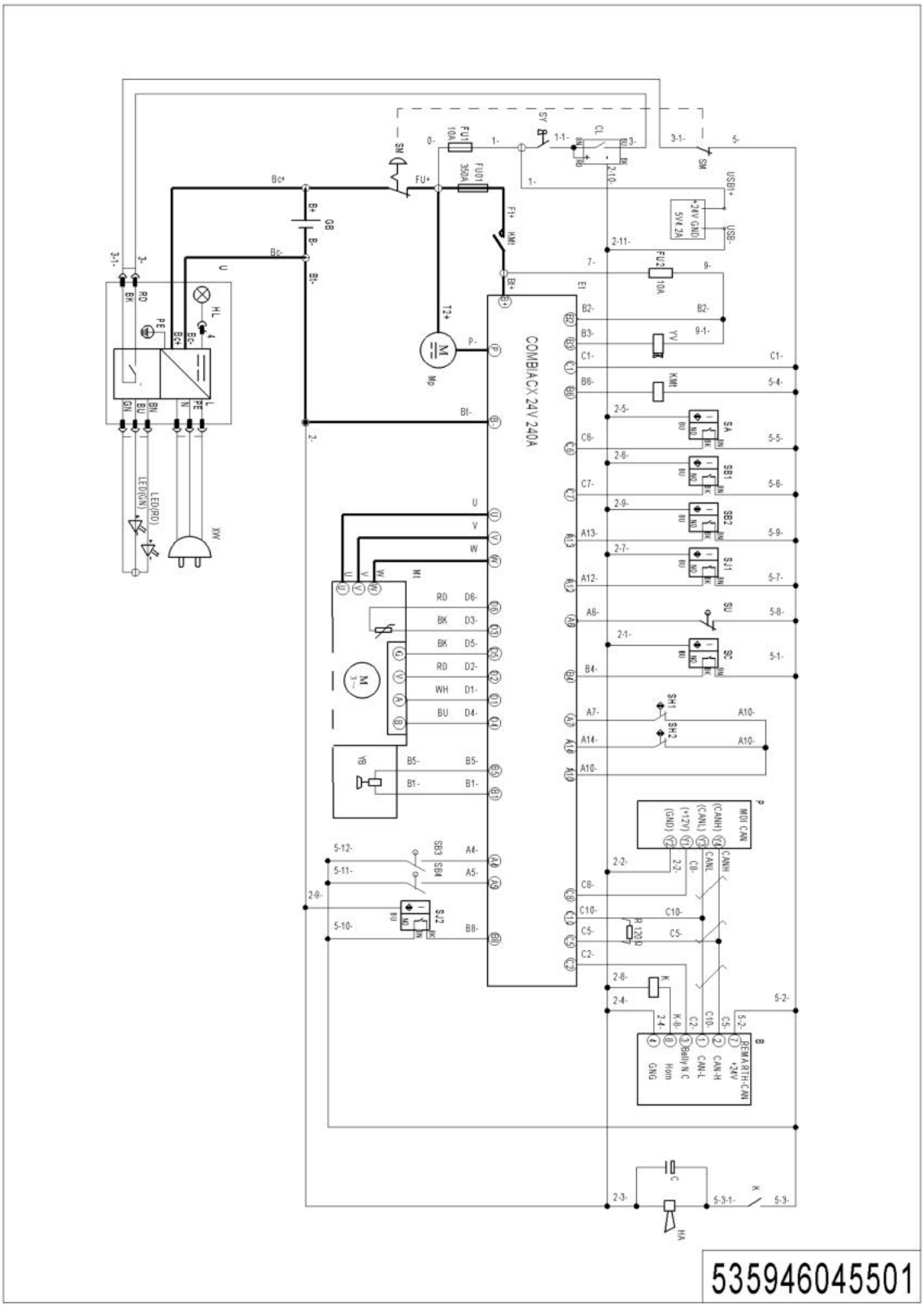

02 Electrical Circuit Diagram (EN1175-2020)

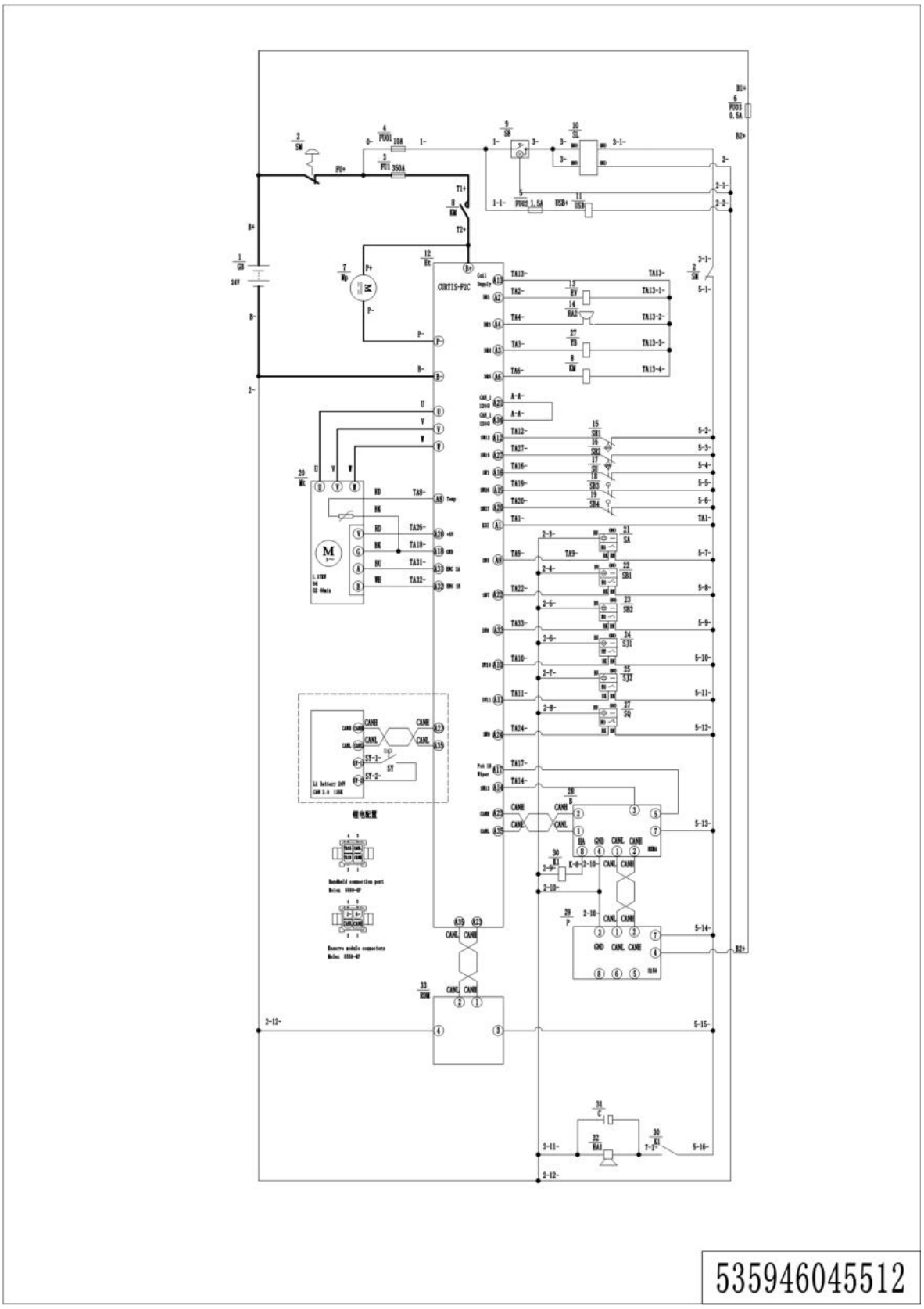

03 Electrical Circuit Diagram (Power Steering)

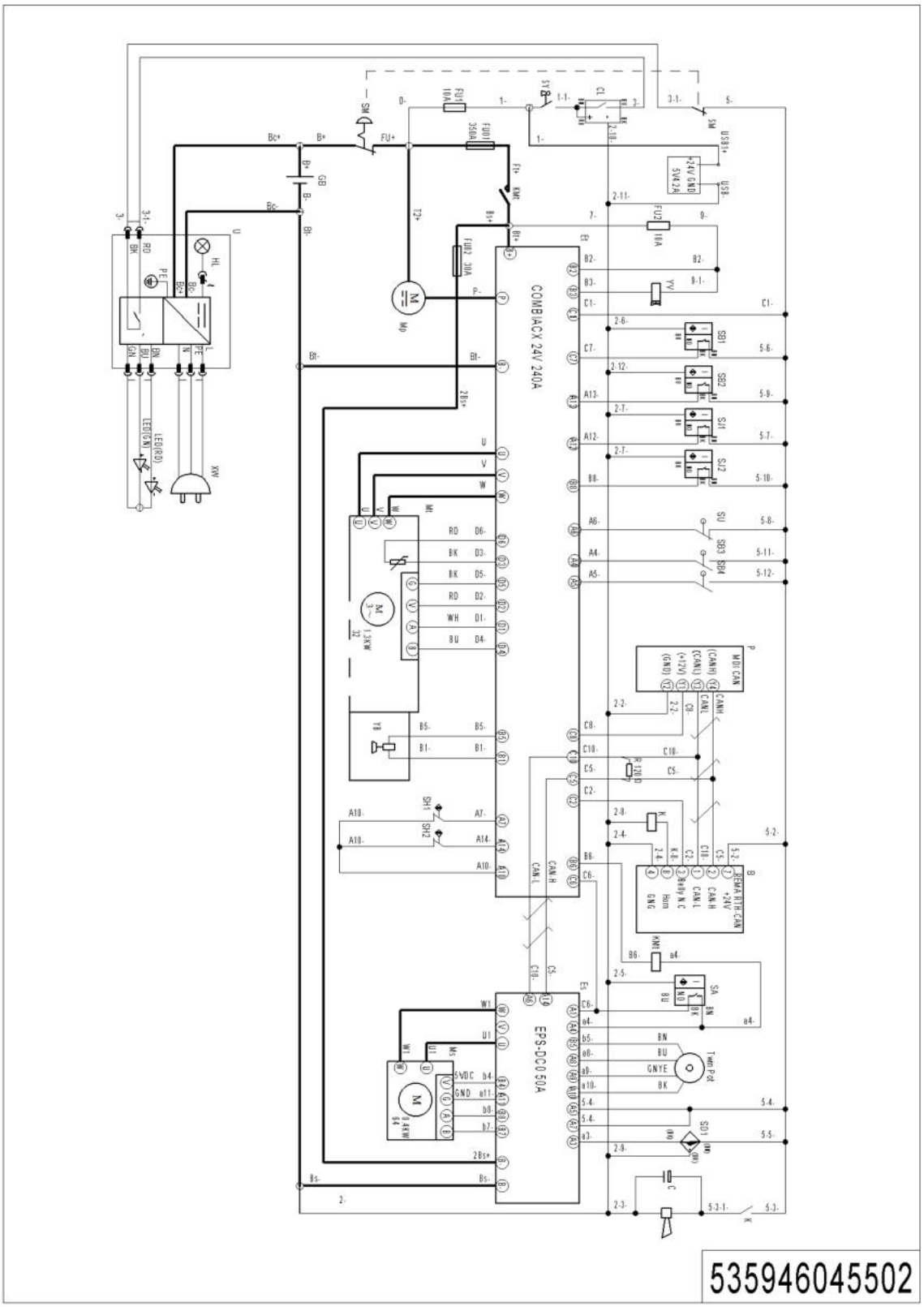

04 Electrical Circuit Diagram (Power Steering,EN1175-2020)

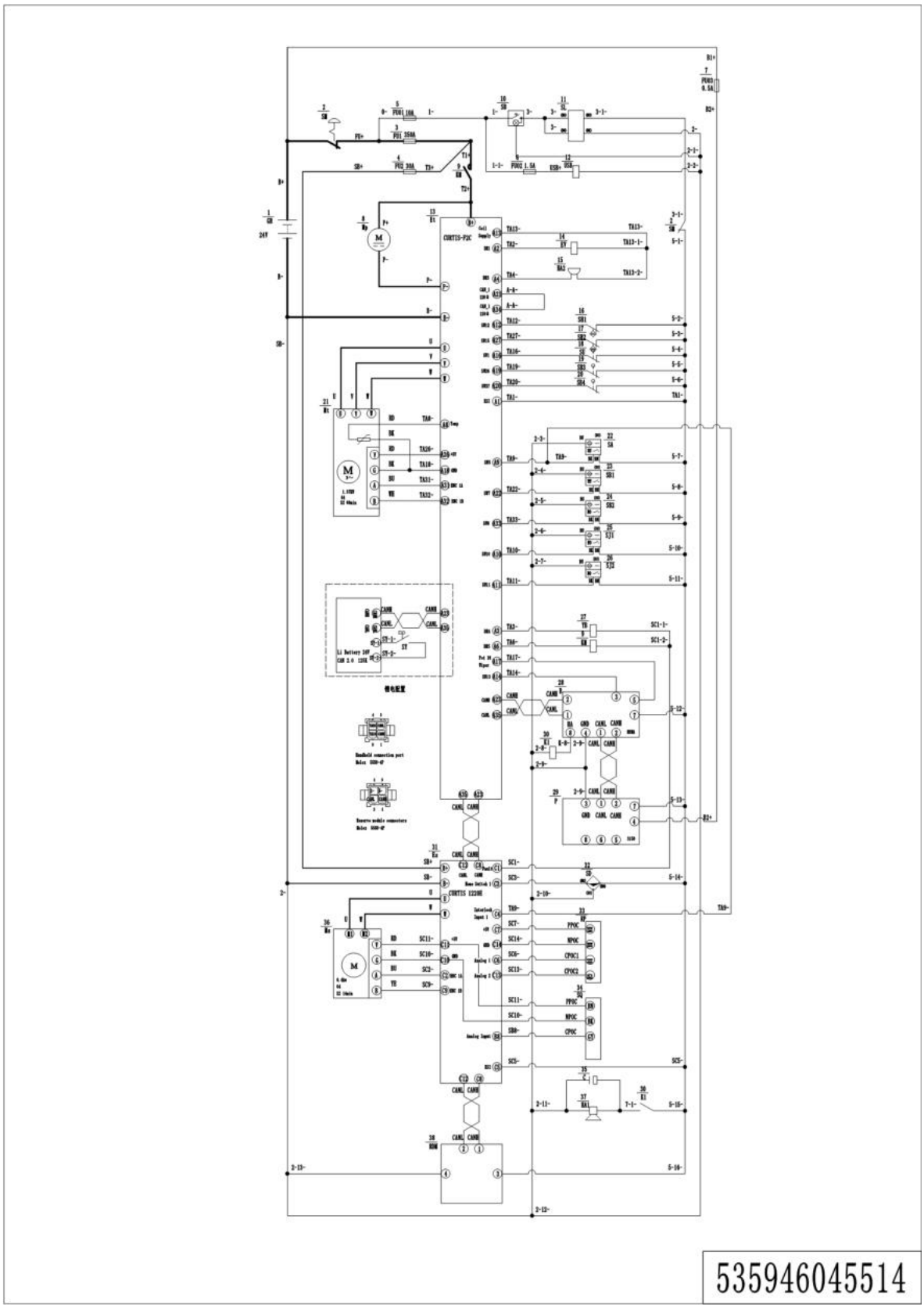

535946045514

05 Hydraulic Circuit Diagram

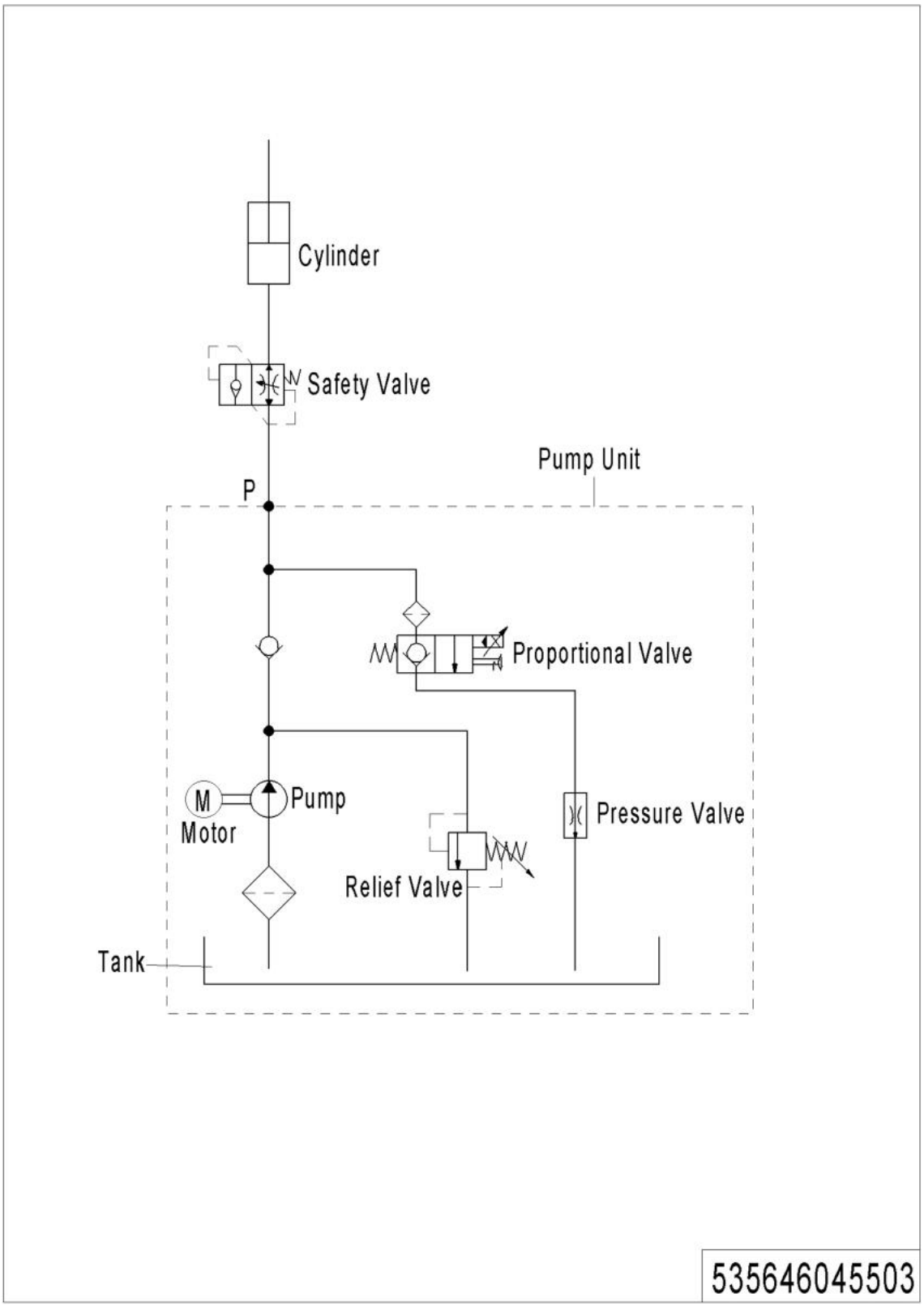

06 Consumable Parts List

No.	Item Code	Item Description	Qty.	Chapter/ Section/ Number
1	910700200021	Bearing	1	Chapter 1/01/4
2	505633510000	Proximity Switch	1	Chapter 1/01/7
3	940300400005	WheelΦ230x70	1	Chapter 1/01/20
4	910700200025	Bearing	2	Chapter 1/01/21
5	910700200007	Bearing	1	Chapter 1/01/27
6	535998510002	Sensor	1	Chapter 1/02/4.02
7	910700200041	Bearing	2	Chapter 1/03/2
8	921800200008	Potentiometer	1	Chapter 1/03/16
9	940300400005	WheelΦ230x70	1	Chapter 1/03/20
10	505733510001	Proximity Switch	1	Chapter 1/03/24
11	535998510002	Sensor	1	Chapter 1/04/4.02
12	535998520004	Safety Element	1	Chapter 1/04/4.05
13	534498510008	Carbon Brush	1	Chapter 2/03/2
14	534798520026	Carbon Brush	1	Chapter 2/04/2
15	940200300002	Compound Roller	4	Chapter 3/04/1
16	534498510002	Seal Kit	1	Chapter 4/01/7.01
17	920200300001	Microswitch	2	Chapter 4/01/17Chapter 4/02/20
18	535933510012	Switch	3	Chapter 4/01/24Chapter 4/02/27Chapter 4/03/40
19	535933510013	Switch	3	Chapter 4/01/24Chapter 4/02/27Chapter 4/03/37
20	535933510015	Switch	2	Chapter 4/01/24Chapter 4/02/27
21	535933510005	Switch	3	Chapter 4/01/26 Chapter 4/02/31
	535933510005	Switch	3	Chapter 4/03/43
22	940200300001	Compound Roller	8	Chapter 4/01/38Chapter 4/02/35
23	534498510000	Seal Kit	2	Chapter 4/02/12.01
24	534498510001	Seal Kit	1	Chapter 4/02/47.01
25	534798510000	Seal Kit	2	Chapter 4/03/16.01
26	535933510014	Switch	1	Chapter 4/03/38
27	534798510001	Seal Kit	1	Chapter 4/03/58.01
28	506733510002	Proximity Switch	1	Chapter 5/01/12
29	940400100001	Air Spring	1	Chapter 5/01/13

1= Supply as package. 2= Supply with constraints. 3= Phasing-out supply. 4= Supply as assembly. 5= Check other tables.

30	940400100045	Air Spring	1	Chapter 5/01/13
31	940500200002	Bushing	2	Chapter 5/01/17
32	532998510001	Wheel	4	Chapter 5/04/1
33	940300300009	WheelΦ84x70	4	Chapter 5/04/1.01
34	910700200019	Bearing	8	Chapter 5/04/1.02
35	910700400004	Bearing	2	Chapter 5/05/4.03
36	940300300020	WheelΦ150x54	1	Chapter 5/05/4.07
37	910700200019	Bearing	2	Chapter 5/05/4.08
38	920200100012	Emergency Button	1	Chapter 6/01/3.02 Chapter 6/02/3.02
39	920100100013	Fuse	1	Chapter 6/07/4 Chapter 6/08/7
	920100100013	Fuse	1	Chapter 6/08/4 Chapter 6/10/9
40	920100200002	Fuse	2	Chapter 6/04/6 Chapter 6/05/7

1= Supply as package. 2= Supply with constraints. 3= Phasing-out supply. 4= Supply as assembly. 5= Check other tables.