NOBLELIFT

Electric Pallet Stacker PS20L

PARTS MANUAL

535046020101

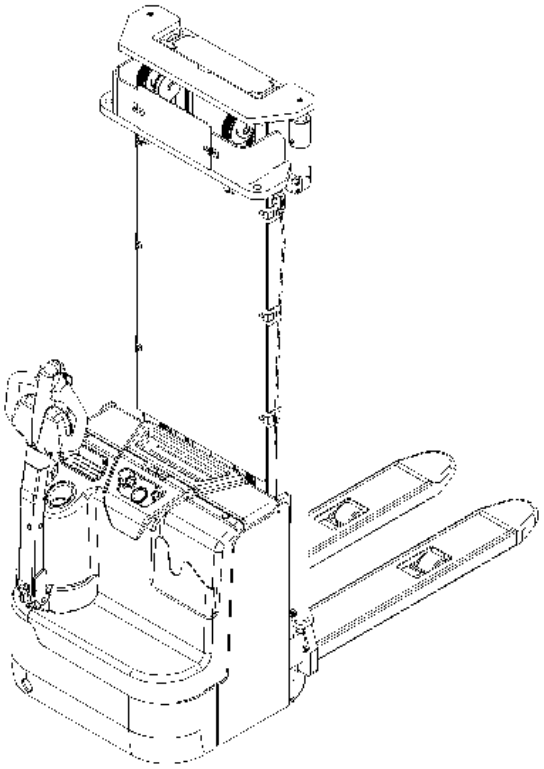

Version V04

Truck Identification Number From:

Parts Manual

PS20L-PM04EN

Please order parts from authorized dealers of Noblelift Intelligent Equipment Co., LTD.

In order to avoid wrong delivery, all the orders for spare parts should specify the following items:

- Truck model, identification number and manufacture year.
- Orders for spare parts of mast, hydraulic transmission unit, steering axle, motor, etc. shall indicate the manufacture number of these parts.
- Codes for Noblelift spare parts are shown in the table of parts manual. Please also pay attention to the description of supply status, order quantity, etc. (check the number listed in "Mark" column of the parts manual).

"Mark" Column:

The unmarked indicates the parts are in short supply cycle.

Number 1: supply as package. Indicating these that parts are small parts and seal parts, which are supplied in package unit and in short supply cycle.

Number 2: supply with constraints. Indicating that these spare parts are not in stock and will be prepared for production after receiving the order from customers, which are in long supply cycle.

Number 3: phasing-out supply. Indicating that these parts will be replaced by new parts due to technical improvements and the current stock will not be available when these parts run out. Please check the description of technical improvements notice.

Number 4: supply as assembly. Indicating that these parts are assembly parts defined by manufacture process, which cannot be supplied as a single part.

Number 5: check other tables.

This parts manual is the property of Noblelift and can be shared under the confidential agreement only, Noblelift has the right to claim for compensation of any unauthorized use. Copy without permission is not allowed. Figures in the manual are not limited by the original design. Noblelift Intelligent Equipment Co., LTD reserves the right to improve the products for continuous technology progress.

Table of Contents

Chapter 1: Drive System 1

01 Drive Unit (535046013501) 1

02 Drive Unit 1.7kW (535046013502) 3

Chapter 2: Hydraulic System 5

01 Hydraulic Pipeline (535046024001) 5

02 Pump Unit (HPI,3.2KW)(534746023501) 7

03 Pump Unit (VIBO,3.2KW) (534746023502) 9

Chapter 3: Truck Frame 11

01 Chassis (535046021501) 11

02 Chassis (Sideways Exchange) (535046021502) 13

02 Chassis (Sideways Exchange) (535046021502) Continuation 15

03 Fork Carriage (535046038001) 17

Chapter 4: Mast System 19

01 Two-stage Mast Standard Lift (535046044001) 19

01 Two-stage Mast Standard Lift (535046044001) Continuation 21

02 Two-stage mast full free lift (535046043501) 23

02 Two-stage mast full free lift (535046043501) Continuation 1 25

02 Two-stage mast full free lift (535046043501) Continuation 2 27

03 Triple Mast Standard Lift (535046045001) 29

03 Triple Mast Standard Lift (535046045001) Continuation 31

04 Triple Mast Full Free Lift (535046044501) 33

04 Triple Mast Full Free Lift (535046044501) Continuation 1 35

04 Triple Mast Full Free Lift (535046044501) Continuation 2 37

Chapter 5: Steering System, Braking System, Wheels 39

01 Tiller Unit (504446011001) 39

02 Control Handle (535946011002) 41

03 Control Handle (EN1175:2020) (566546010002) 43

04 Load Wheel (532946017001) 45

05 Caster (534746016501).....47

Chapter 6: Electrical Parts 49

01 Display Assembly （534746010001）.....49

02 Display Assembly(EN1175:2020) (534746010001).....51

03 Electronic Components (534446033001) 53

04 Electronic Components(EN1175:2020) (534746033002).....55

05 Electric control assembly (534746033003) (EN1175:2020).....57

06 Charger (534746036501) 59

07 Charger (Lithium battery) (535946036502).....61

08 Traction Battery (534746037001).....63

09 Traction Battery (Lithium battery) (535946037002) 65

Chapter 7: Special Parts.....67

01 Load Backrest (532646040501).....67

Chapter 8: Others 69

01 Label and Decal (EU) (535046047001).....69

02 Label and Decal (US) (535046047002) 71

Appendix.....73

01 Electrical Circuit Diagram （534746045501）.....73

02 Electrical Circuit Diagram (lithium battery) （534746045501）.....74

03 Electrical Circuit Diagram(EN1175:2020) (534746045503).....75

04 Electrical Circuit Diagram (lithium battery) 76

05 Hydraulic Circuit Diagram (534746045502) 77

06Consumable Parts List 78

Chapter 1: Drive System

01 Drive Unit (535046013501)

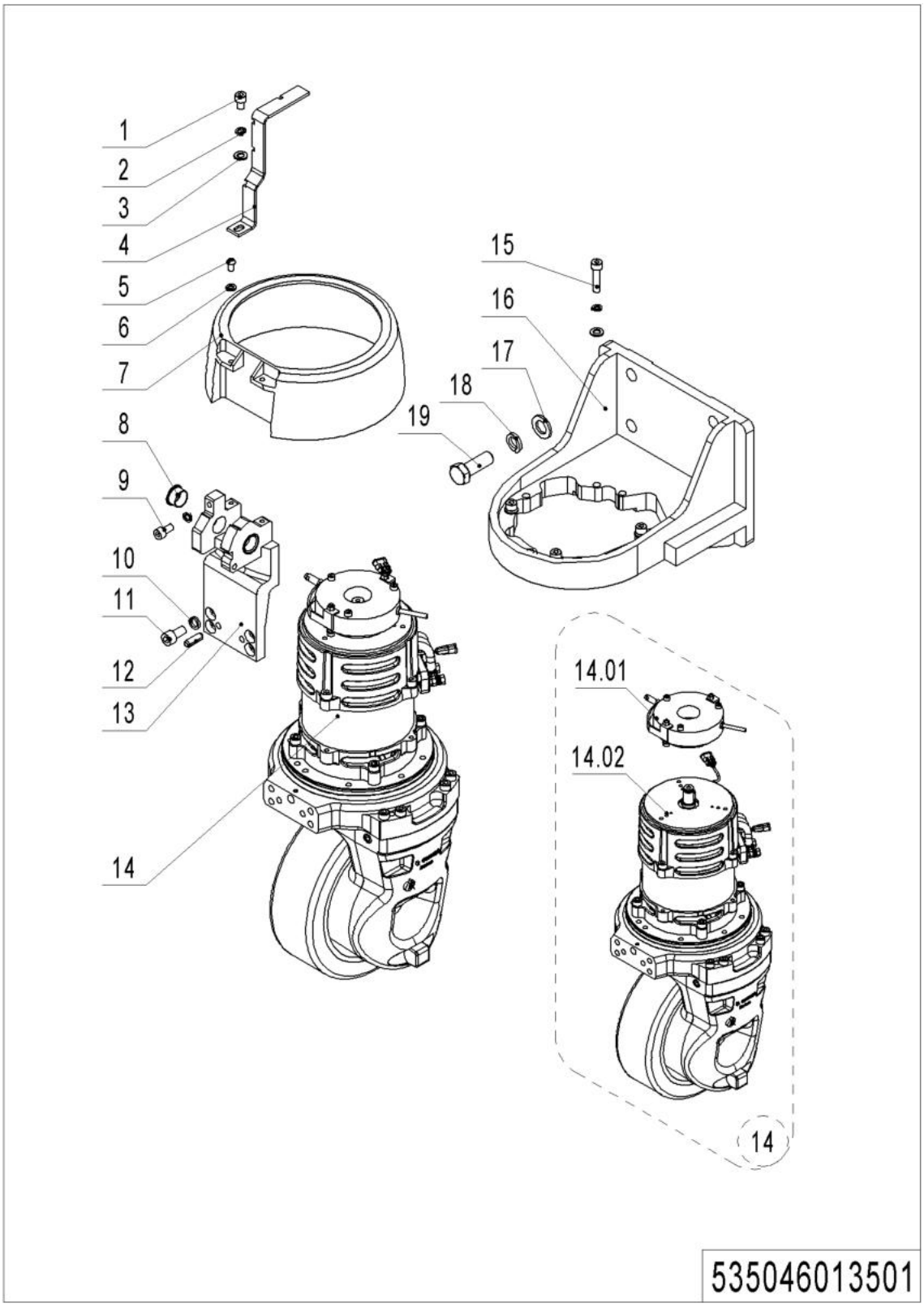

01 Drive Unit (535046013501)

No.	Item Code	Mark	Item Description	Qty.	Substitute	Note
1	910200200053	1	Screw	1		
2	910400500006	1	Spring Washer	5		
3	910400100006	1	Flat Washer	5		
4	534713520002		Fixing Mount	1		
5	910200300017	1	Screw	2		
6	910400100005	1	Flat Washer	2		
7	534713520003		Protective Cover	1		
8	940500200005		Bushing	2		
9	910200200055	1	Screw	1		
10	910400500007	1	Spring Washer	4		
11	910200200075	1	Screw	4		
12	910600400044	1	Spring Pin	2		
13	534713520001		Bracket	1		
14	535098510006		Drive Unit Assembly	1		
14.01	940700100001		Brake	1		
14.02	940900400003	5	Drive Unit 1.7Kw	1		**See 535046013001**
15	910200200060	1	Screw	4		
16	534713520000		Wheel Mount	1		
17	910400100010	1	Flat Washer	4		
18	910400500010	1	Spring Washer	4		
19	910100300071	1	Bolt	4		

1= Supply as package. 2= Supply with constraints. 3= Phasing-out supply. 4= Supply as assembly. 5= Check other tables.

02 Drive Unit 1.7kW (535046013502)

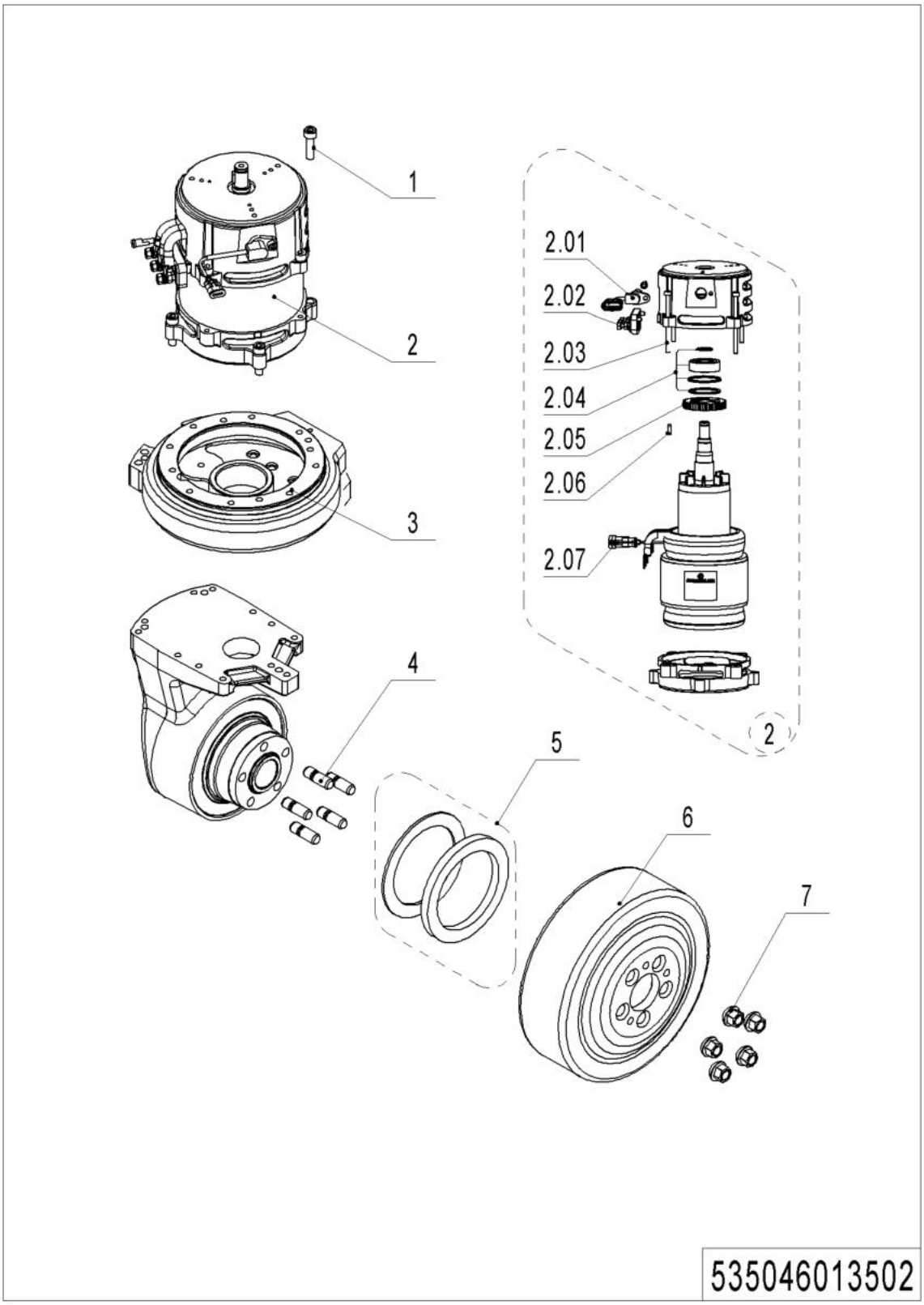

1= Supply as package. 2= Supply with constraints. 3= Phasing-out supply. 4= Supply as assembly. 5= Check other tables.

02 Drive Unit 1.7kW (535046013502)

No.	Item Code	Mark	Item Description	Qty.	Substitute	Note
1	504498520016	1	Screw	4		
2	535098510004	2	Motor	1		
2.01	535098520041		Sensor	1		
2.02	535098520042		Wiring Board	1		
2.03	535098520043		Screw	4		
2.04	535098510005		Motor Kit	1		
2.05	535098520044		Sensor	1		
2.06	504498520011		Feather Key	1		
2.07	535098520045		Sensor	1		
3	504498510002	2	Rotary Table Kit	1		
4	504498520005	2	Bolt	5		
5	504498510003	2	Seal Kit	1		
6	940300400005		WheelΦ230x70	1		
7	504498520003	1	Nut	5		

Chapter 2: Hydraulic System

01 Hydraulic Pipeline (535046024001)

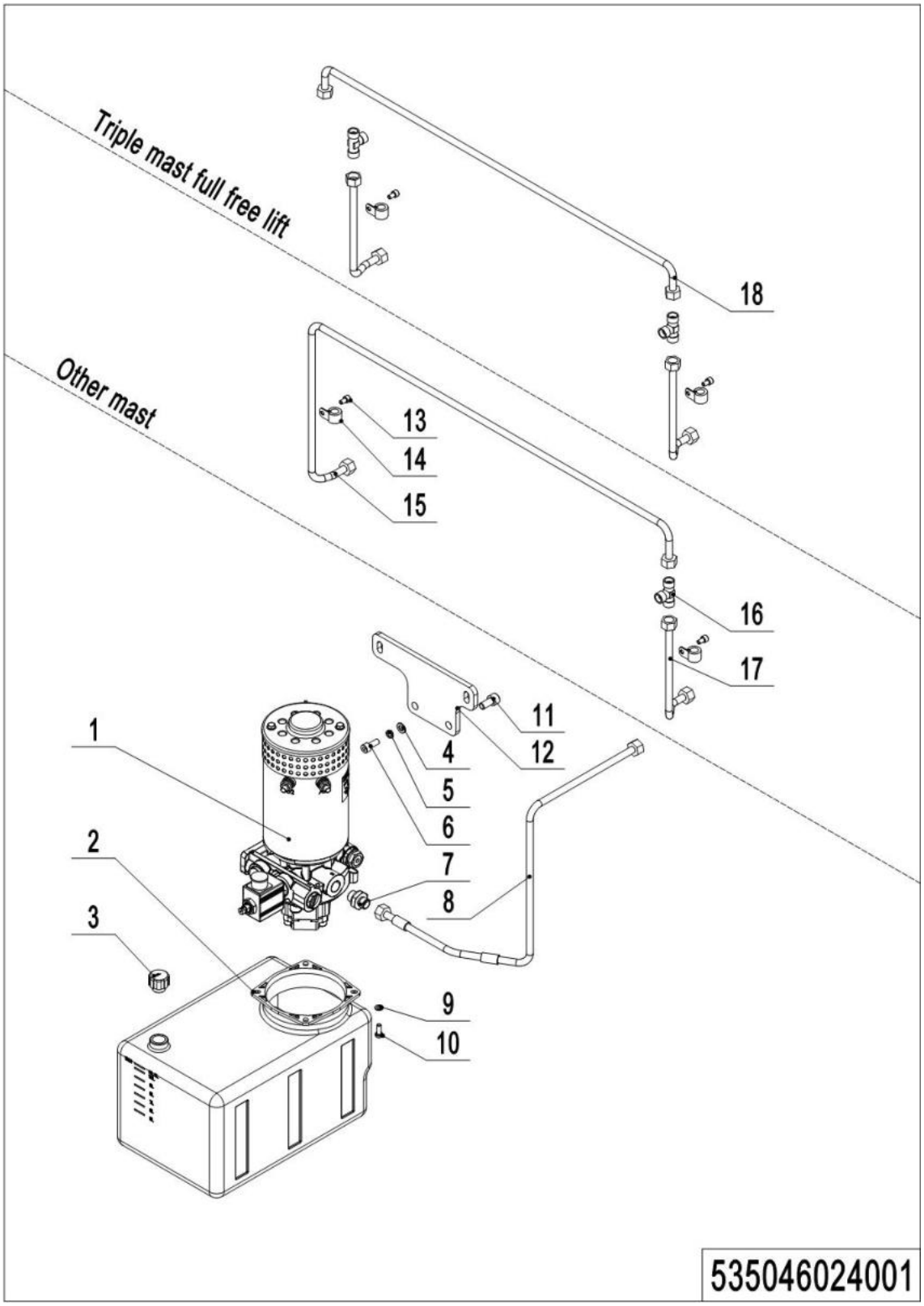

01 Hydraulic Pipeline (535046024001)

No.	Item Code	Mark	Item Description	Qty.	Substitute	Note
1	950900100015	5	Pump Unit	1		**See 534746023501**
1	950900100098	5	Pump Unit	1		**See 534746023502**
2	534719020002		Tank	1		
3	951100200004		Screw Plug	1		
4	910400100006	1	Flat Washer	2		
5	910400500006	1	Spring Washer	2		
6	910200200057	1	Screw	2		
7	950400300005		Joint	1		
8	535024010005		Hose	1		
9	910400100005	1	Flat Washer	4		
10	910100300010	1	Bolt	4		
11	910200200075	1	Screw	2		
12	534719020001		Mounting Plate	1		
13	910200200032		Screw	2		
14	951000100001		Hose Clamp	2		
15	535024010001		Steel Tube	1		
16	950400700002		Joint	1		
16	950400700002		Joint	2		
17	535024010002		Steel Tube	1		Others
17	535024010002		Steel Tube	2		Triple Mast Full Free Lift
18	535024010000		Steel Tube	1		

1= Supply as package. 2= Supply with constraints. 3= Phasing-out supply. 4= Supply as assembly. 5= Check other tables.

02 Pump Unit (HPI,3.2KW)(534746023501)

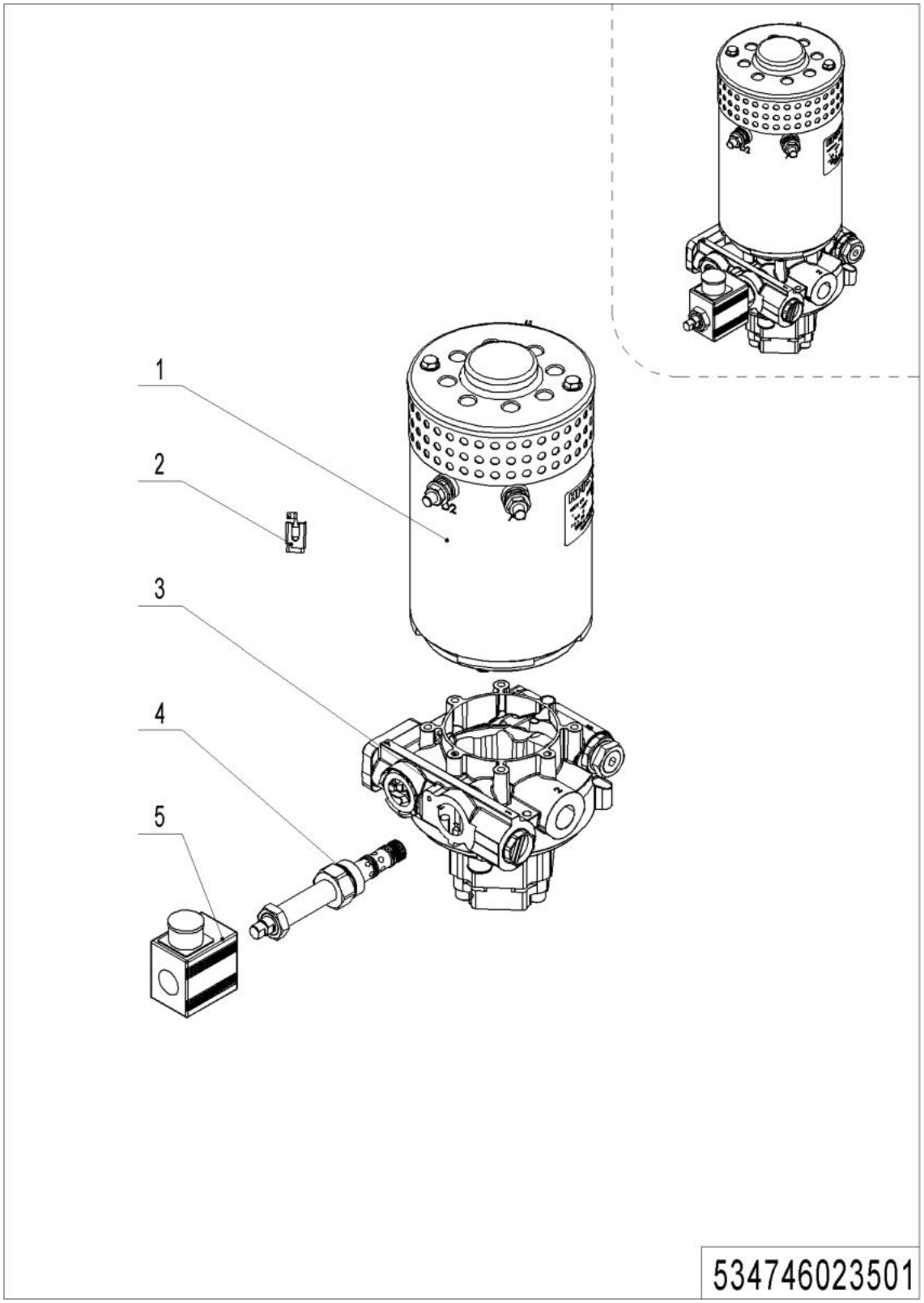

1= Supply as package. 2= Supply with constraints. 3= Phasing-out supply. 4= Supply as assembly. 5= Check other tables.

02 Pump Unit (HPI,3.2KW) (534746023501)

No.	Item Code	Mark	Item Description	Qty.	Substitute	Note
--	950900100015		Pump Unit	1		HPI,3.2KW
1	534798510006	2	Motor	1		
2	534798520026	2	Carbon Brush	1		
3	534798510007	2	Valve Block	1		
4	534798520024	2	Magnetic Valve	1		**Provide with coil**
5	534798520025	2	Coil	1		**Provide with valve**

03 Pump Unit (VIBO,3.2KW) (534746023502)

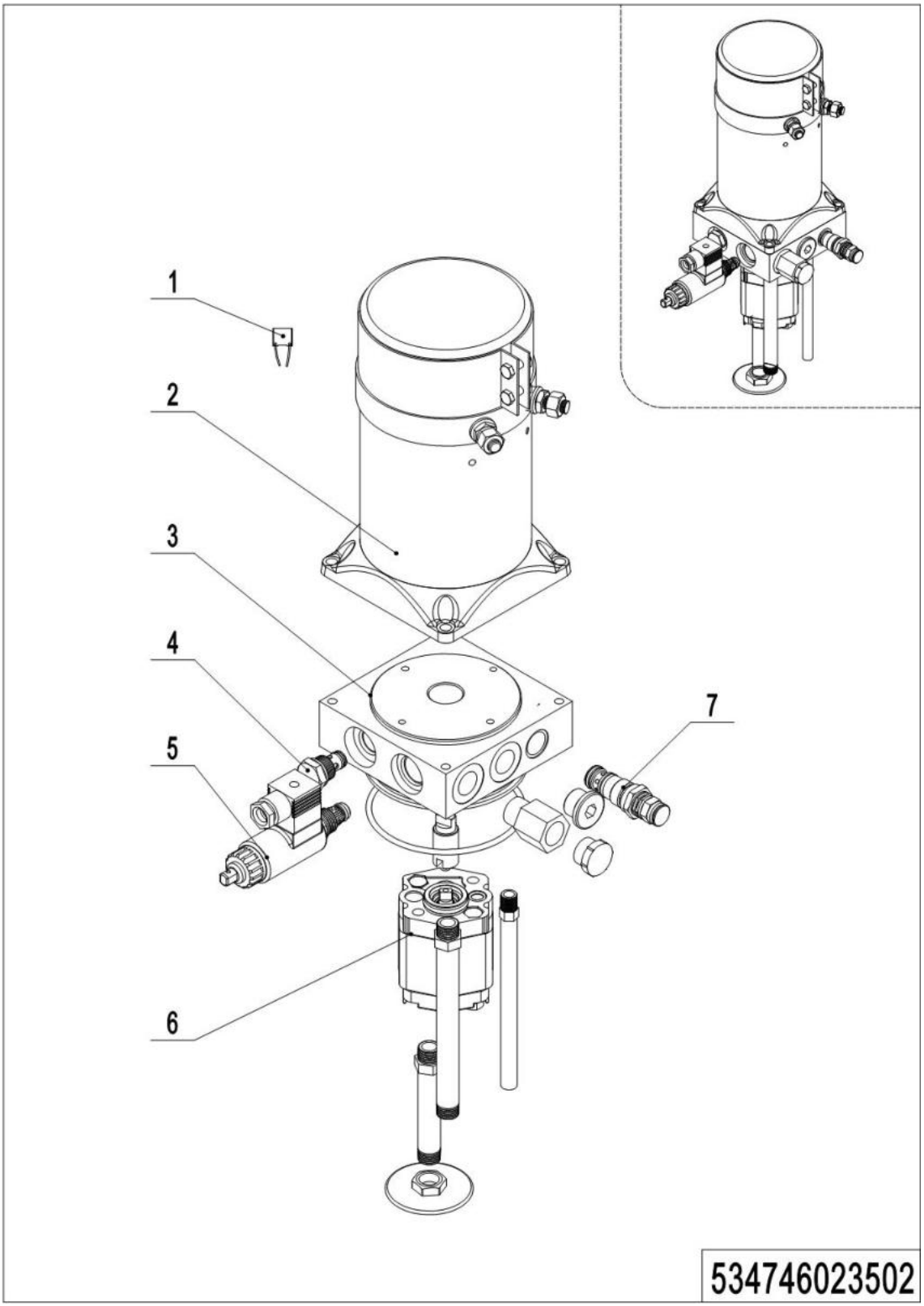

1= Supply as package. 2= Supply with constraints. 3= Phasing-out supply. 4= Supply as assembly. 5= Check other tables.

03 Pump Unit(VIBO,3.2KW) (534746023502)

No.	Item Code	Mark	Item Description	Qty.	Substitute	Note
--	950900100098		Pump Unit	1		**VIBO,3.2KW**
1	534798510012	2	Motor	1		
2	534798510013	2	Valve	1		
3	532098510003	2	Check Valve	1		
4	534798510014	2	Magnetic Valve	1		
5	534798510015	2	Gear Pump	1		
6	402698520018	2	Overflow Valve	1		

Chapter 3: Truck Frame

01 Chassis (535046021501)

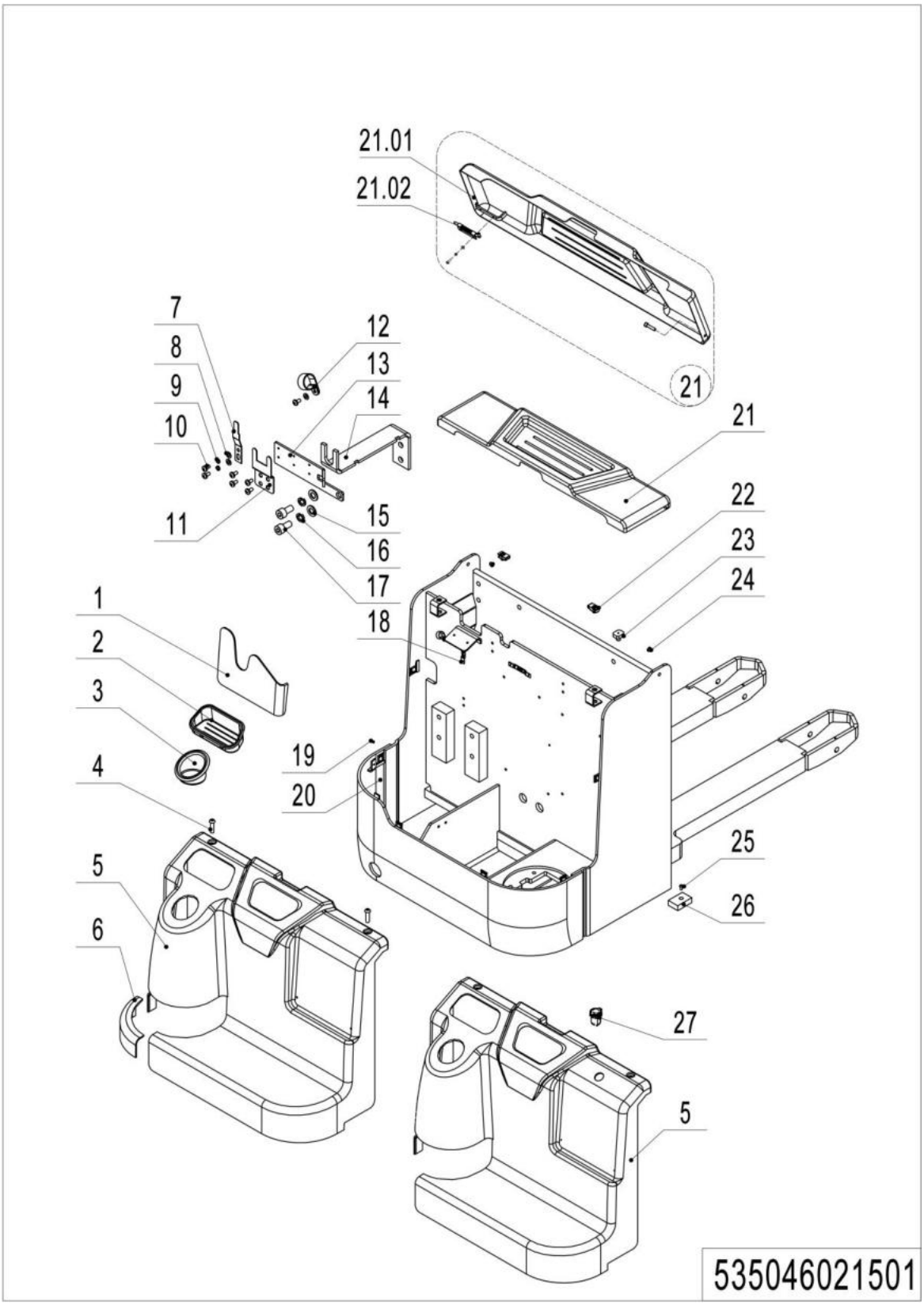

01 Chassis (535046021501)

No.	Item Code	Mark	Item Description	Qty.	Substitute	Note
1	534721520022		File Box	1		
2	534721520021		Container	1		
3	534721520020		Cup Holder	1		
4	941100100002	1	Screw	2		
5	534721520018		Protective Cover	1		
5	535021520022		Protective Cover	1		Only for lithium battery
6	534721520019		Protective Cover	1		
7	921300300010		Connector Holder	1		
8	910400100003	1	Flat Washer	5		
9	910400500003	1	Spring Washer	4		
10	910200500034	1	Screw	9		
11	921300300015		Holder	1		
12	921300200004		Cable Clamp	1		
13	921300300012		Holder	1		
14	534721520025		Fixing Mount	1		
15	910400100006	1	Flat Washer	2		
16	910400500006	1	Spring Washer	2		
17	910200200055	1	Screw	2		
18	921300300005		Holder	3		
19	910200800011	1	Screw	2		
20	535021510000	2	Chassis(570x1150)	1		
20	535021510001	2	Chassis(685x1150)	1		
21	535021010001		Cell Cover Assembly	1		
21.01	535021010000		Cell Cover	1		
21.02	940800900001		Lock Pin	1		
22	940400400003		Cage Nut	2		
23	505938520016		Crash Pad	1		
24	534721520023		Sleeve	2		
25	910200300017	1	Screw	2		
26	534721520024		Crash Pad	2		
27	921900100006		USB interface	1		Only for lithium battery

02 Chassis (Sideways Exchange) (535046021502)

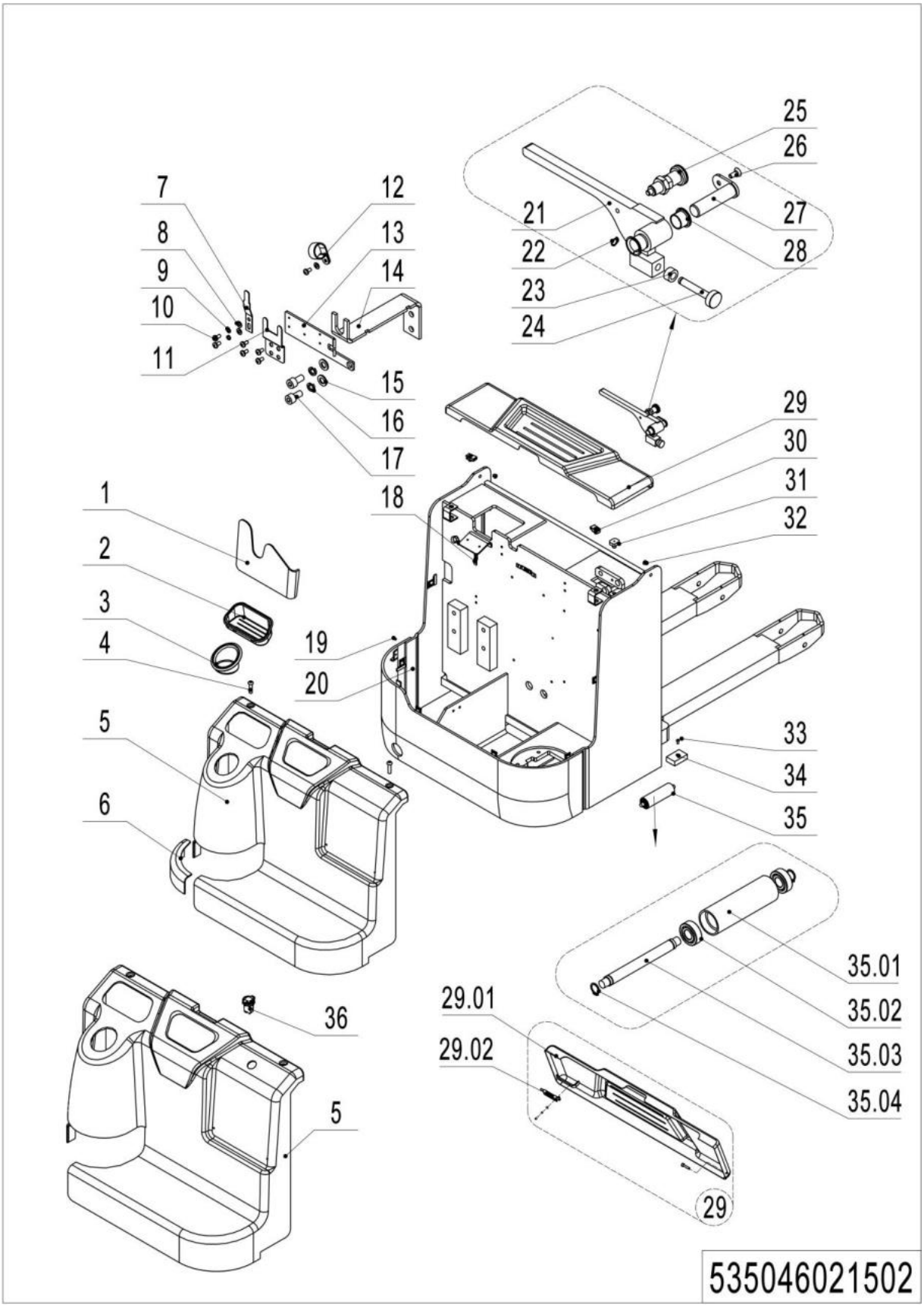

02 Chassis (Sideways Exchange) (535046021502)

No.	Item Code	Mark	Item Description	Qty.	Substitute	Note
1	534721520022		File Box	1		
2	534721520021		Container	1		
3	534721520020		Cup Holder	1		
4	941100100002	1	Screw	2		
5	534721520018		Protective Cover	1		
5	535021520022		Protective Cover	1		Only for lithium battery
6	534721520019		Protective Cover	1		
7	921300300010		Connector Holder	1		
8	910400100003	1	Flat Washer	5		
9	910400500003	1	Spring Washer	4		
10	910200500034	1	Screw	9		
11	921300300015		Holder	1		
12	921300200004		Cable Clamp	1		
13	921300300012		Holder	1		
14	534721520025		Fixing Mount	1		
15	910400100006	1	Flat Washer	2		
16	910400500006	1	Spring Washer	2		
17	910200200055	1	Screw	2		
18	921300300005		Holder	3		
19	910200800011	1	Screw	2		
20	535021510002	2	Chassis(570x1150)	1		
20	535021510003	2	Chassis(685x1150)	1		
21	562038510008		Baffle	1		
22	910401300002	1	Circlip	1		
23	535921520038	1	Spacer Bush	1		
24	535921520037		Pin	1		
25	940800900002		Indexing Plunger	1		
26	910200400017	1	Screw	1		
27	535921510004		Pin	1		
28	940500200008		Bushing	2		

02 Chassis (Sideways Exchange) (535046021502) Continuation

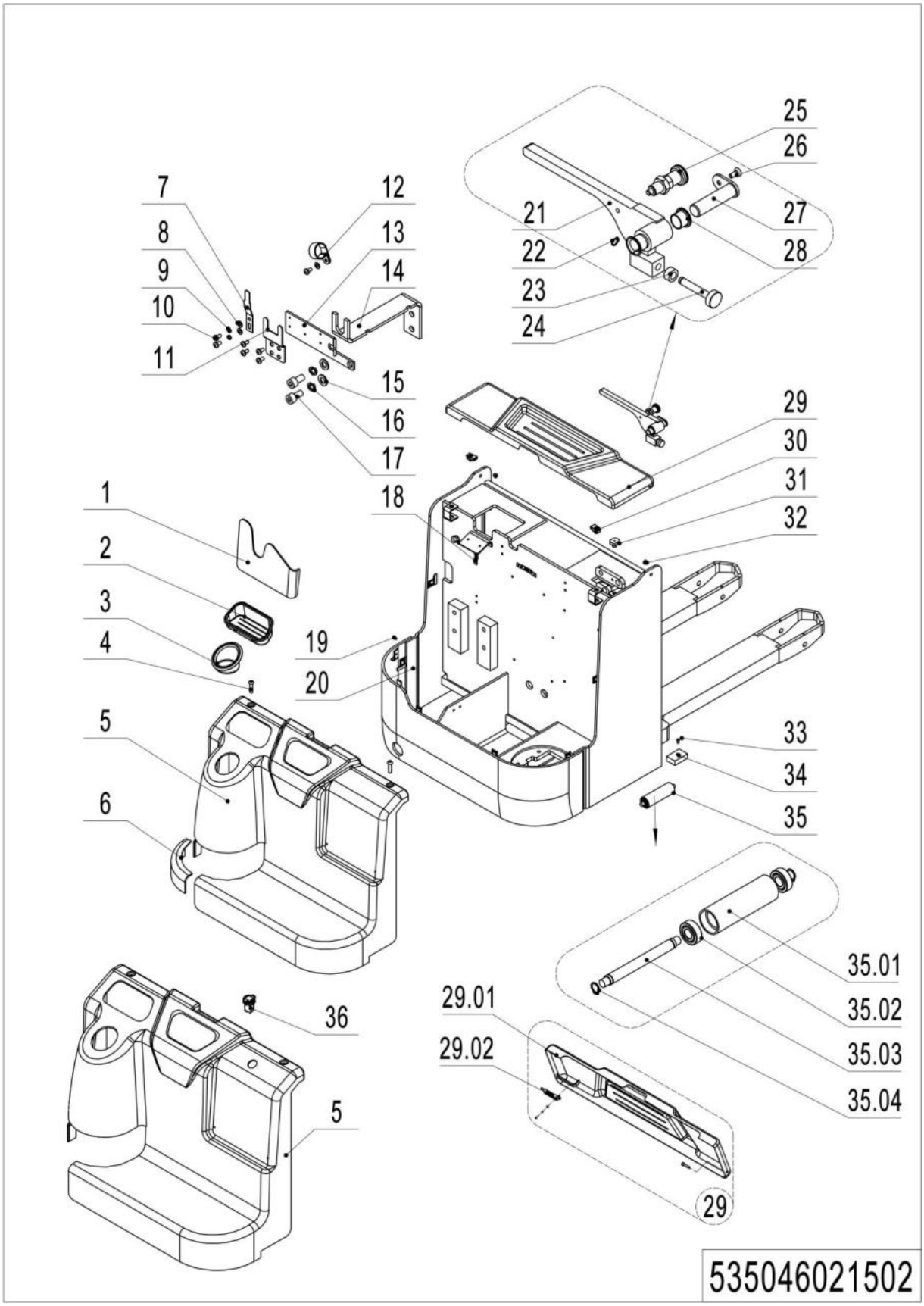

02 Chassis (Sideways Exchange) (535046021502) Continuation

No.	Item Code	Mark	Item Description	Qty.	Substitute	Note
29	535021010001		Cell Cover	1		
29.01	535021010000		Cell Cover	1		
29.02	940800900001		Lock Pin	1		
30	940400400003		Cage Nut	2		
31	505938520016		Crash Pad	2		
32	534721520023		Sleeve	2		
33	910200300017	1	Screw	2		
34	534721520024		Crash Pad	2		
35	534721510003		Roller	5		
35. 01	534721520028		Roller	5		
35. 02	910700200017		Bearing	10		
35. 03	534721520029		Axle	5		
35. 04	910401300006	1	Circlip	10		
36	921900100006		USB interface	1		Only for lithium battery

03 Fork Carriage (535046038001)

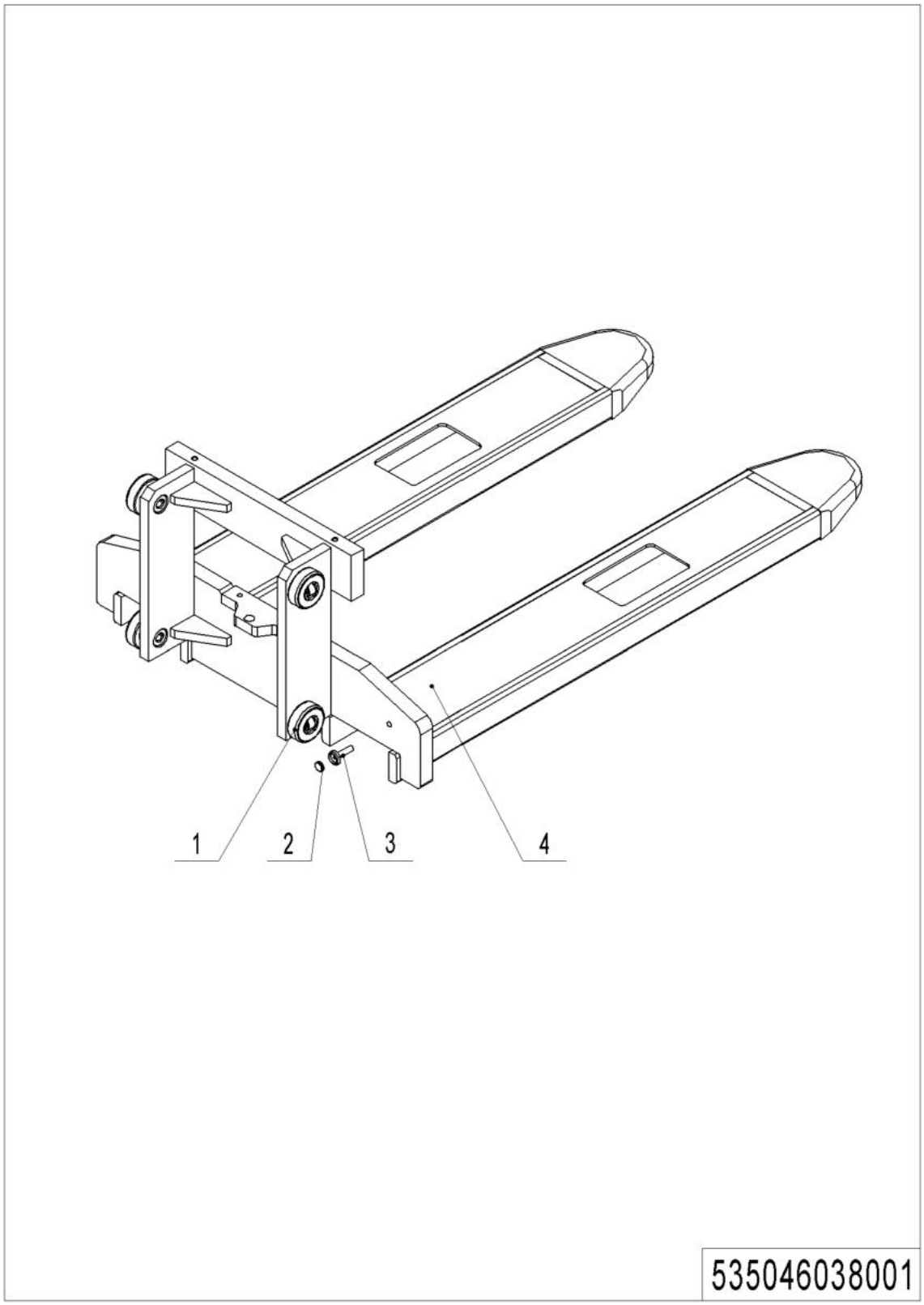

1= Supply as package. 2= Supply with constraints. 3= Phasing-out supply. 4= Supply as assembly. 5= Check other tables.

03 Fork Carriage (535046038001)

No.	Item Code	Mark	Item Description	Qty.	Substitute	Note
1	940200300022		Compound Roller	4		
2	940600100001		Magnetic Steel	1		
3	940600200001		Mounting Base	1		
4	535038010000	2	Fork(570x1150)	1		**DX**
4	535038010001	2	Fork(685x1150)	1		**DX**
4	535038010002	2	Fork(570x1150)	1		**TX**
4	535038010003	2	Fork(685x1150)	1		**TX**

Chapter 4: Mast System

01 Two-stage Mast Standard Lift (535046044001)

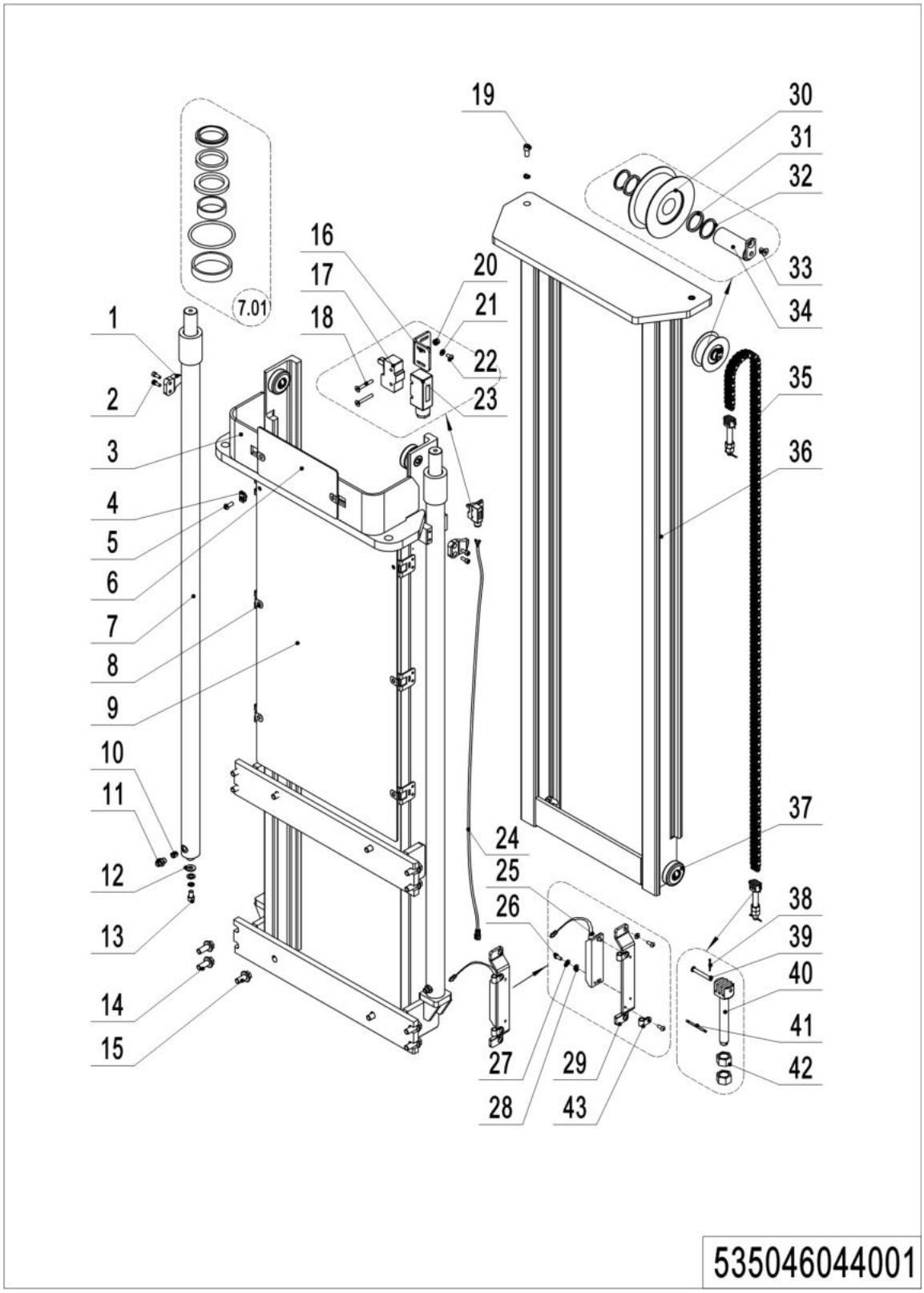

01 Two-stage Mast Standard Lift (535046044001)

No.	Item Code	Mark	Item Description	Qty.	Substitute	Note
1	275044020076		Fixing Plate	2		
2	910200200057	1	Screw	4		
3	535044010020	2	Outer Mast(2900)	1		
3	535044010019	2	Outer Mast(3200)	1		
3	535044010018	2	Outer Mast(3600)	1		
4	940400400003		Cage Nut	2		
5	941100100005	1	Screw	2		
6	534744520037		Guard Plate	1		
7	535044010008		Cylinder	2		**2900**
7	535044010007		Cylinder	2		**3200**
7	535044010006		Cylinder	2		**3600**
7.01	535098510003		Seal Kit	2		
8	940400300001		Spring Buckle	4		
8	940400300001		Spring Buckle	6		
9	535044020012		Guard Plate	1		**2900**
9	535044020011		Guard Plate	1		**3200**
9	535044020010		Guard Plate	1		**3600**
10	950600300001		Safety Valve	2		
11	950400400003		Joint	2		
12	534744520015		Subplate	2		
13	910200200096	1	Screw	2		
14	910100800006	1	Bolt	8		
15	910100800005	1	Bolt	4		
16	534744520036		Fixing Plate	1		
17	920200300001		Microswitch	1		
18	910200400007	1	Screw	2		
19	910200200097	1	Screw	2		
20	910300500001	1	Nut	2		
21	910400100003	1	Flat Washer	1		
22	910200300005	1	Screw	2		

1= Supply as package. 2= Supply with constraints. 3= Phasing-out supply. 4= Supply as assembly. 5= Check other tables.

01 Two-stage Mast Standard Lift (535046044001) Continuation

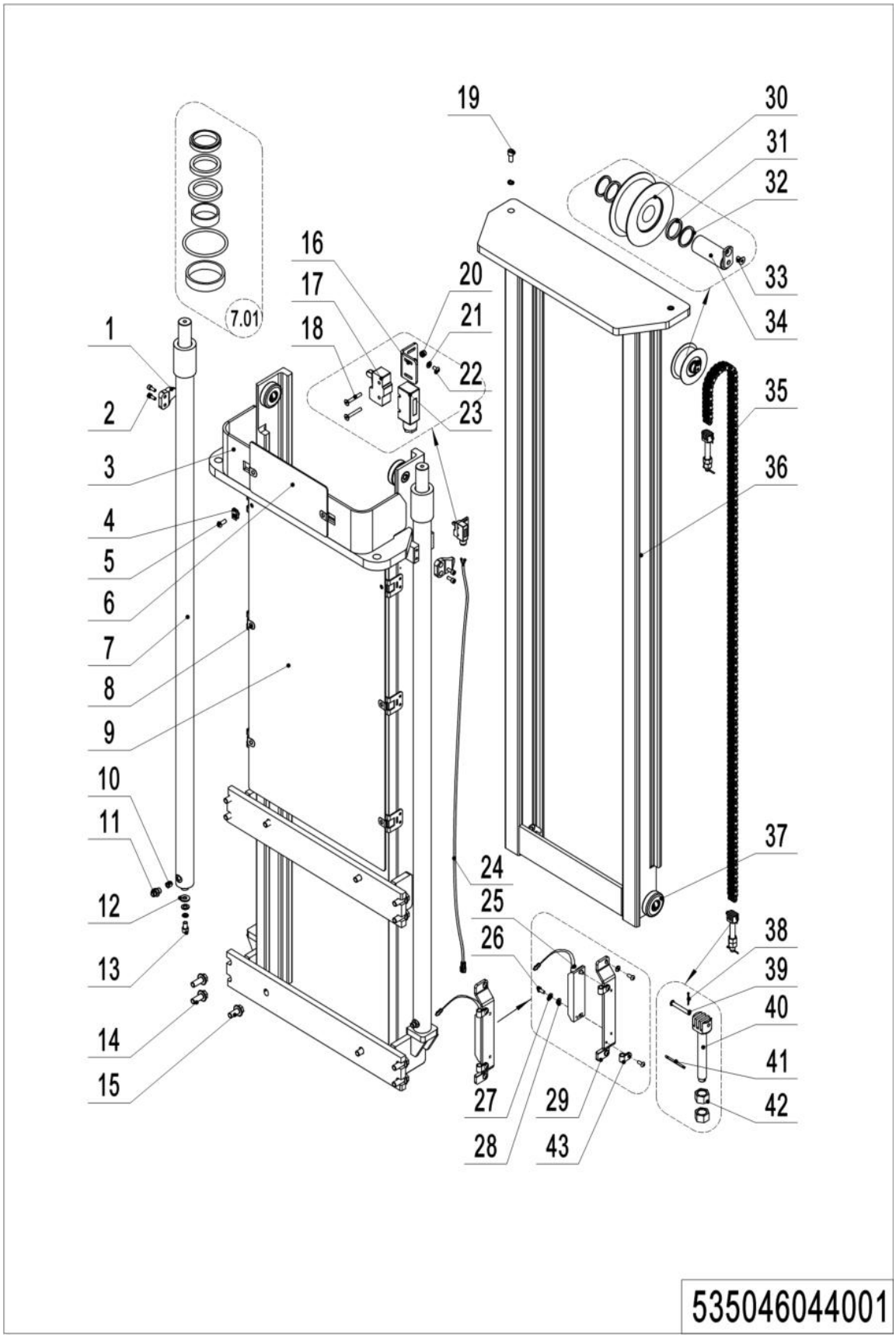

01 Two-stage Mast Standard Lift (535046044001) Continuation

No.	Item Code	Mar	Item Description	Qty.	Substitute	Note
23	920200300008		Protective Cover	1		
24	534733010013		Wire Harness	1		2900
24	534733010014		Wire Harness	1		3200
24	534733010017		Wire Harness	1		3600
25	535933510005		Switch	1		
25	534733010041		Switch	1		EN1175:2020
26	910200500010	1	Screw	2		
26	910200300006	1	Screw	4		EN1175:2020
27	910400100003		Spring Washer	4		EN1175:2020
28	910400500003	1	Spring Washer	2		
29	534744520059		Protective Cover	1		
29	534744520080		Protective Cover	1		EN1175:2020
30	940200500011		Sprocket Bearing	1		
31	940600500009	1	Washer	2		
32	940600500008	1	Washer	2		
33	910200400016	1	Screw	1		
34	535045010008		Pin	1		
35	535044010011		Chain	1		2900
35	535045010009		Chain	1		3200
35	535044010009		Chain	1		3600
36	535044010017	2	Inner Mast(2900)	1		
36	535044010016	2	Inner Mast(3200)	1		
36	535044010015	2	Inner Mast(3600)	1		
37	940200300020		Compound Roller	4		
38	910600600015	1	Cotter Pin	2		
39	941100800009		Pin	2		
40	535045020024		Chain Anchor	2		
41	910600600023	1	Cotter Pin	2		
42	910300200008	1	Nut	4		
43	921300200001		Cable fixer	2		

02 Two-stage mast full free lift (535046043501)

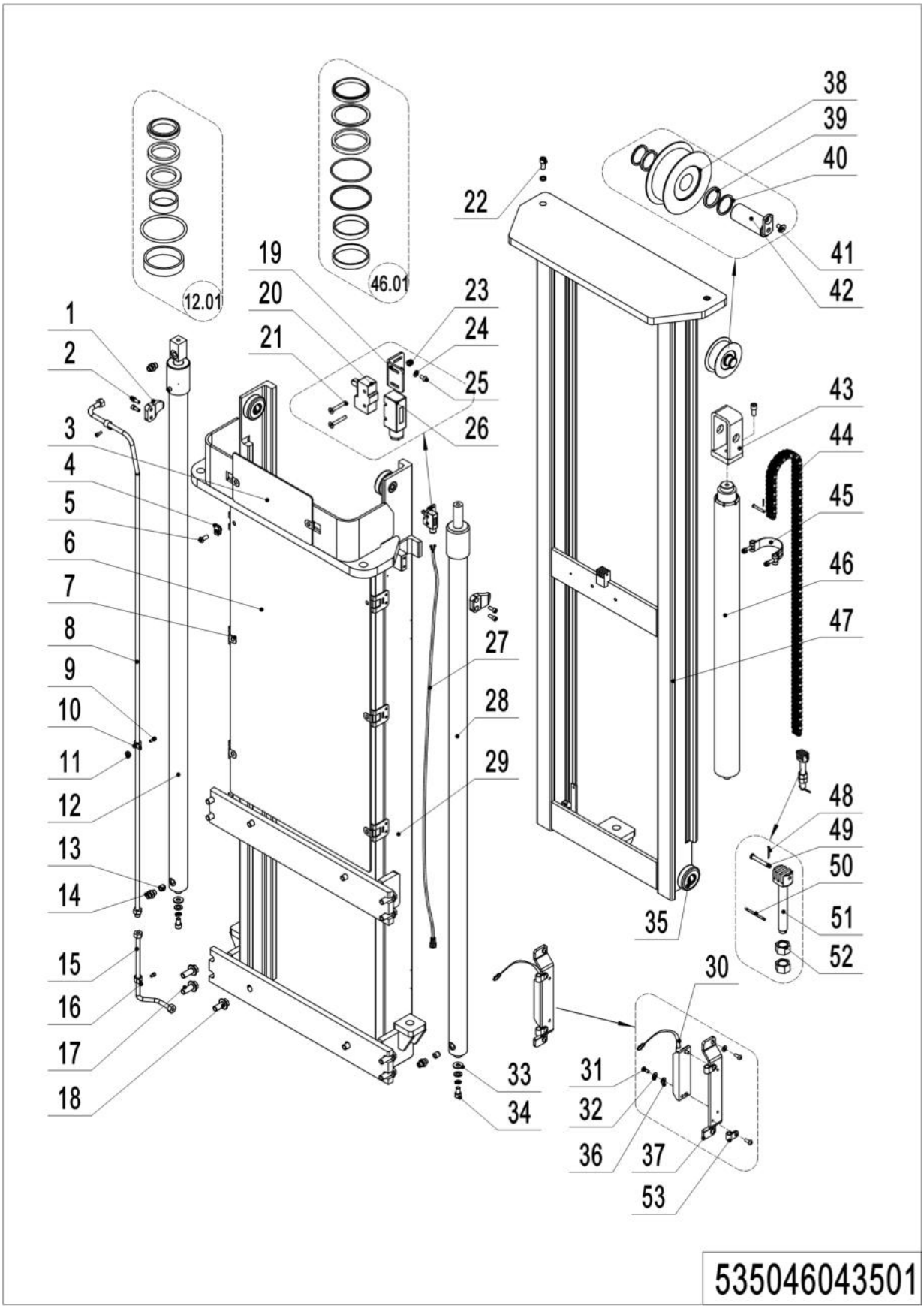

02 Two-stage mast full free lift (535046043501)

No.	Item Code	Mark	Item Description	Qty.	Substitute	Note
1	275044020076		Fixing Plate	2		
2	910200200057	1	Screw	4		
3	534744520037		Guard Plate	1		
4	940400400003		Cage Nut	2		
5	941100100005	1	Screw	2		
6	535043520005		Guard Plate	1		**2700**
6	535044020012		Guard Plate	1		**2900**
6	535044020011		Guard Plate	1		**3200**
6	535044020010		Guard Plate	1		**3600**
7	940400300001		Spring Buckle	4		
7	940400300001		Spring Buckle	6		
8	535043510035		Steel Tube	1		
9	910200200035		Screw	2		
10	951000100001		Hose Clamp	2		
11	940600500001		Washer	2		
12	535043510003		Cylinder	1		**2700**
12	535043510002		Cylinder	1		**2900**
12	535043510001		Cylinder	1		**3200**
12	535043510000		Cylinder	1		**3600**
12.01	535098510002		Seal Kit	2		**Also for cylinder 28**
13	950600300001		Safety Valve	3		
14	950400400003		Joint	3		
15	535043510011		Steel Tube	1		**2700**
15	535043510010		Steel Tube	1		**2900**
15	535043510009		Steel Tube	1		**3200**
15	535043510008		Steel Tube	1		**3600**
16	951000100003		Hose Clamp	1		
17	910100800006		Bolt	8		
18	910100800005		Bolt	4		
19	534744520036		Fixing Plate	1		

1= Supply as package. 2= Supply with constraints. 3= Phasing-out supply. 4= Supply as assembly. 5= Check other tables.

02 Two-stage mast full free lift (535046043501) Continuation 1

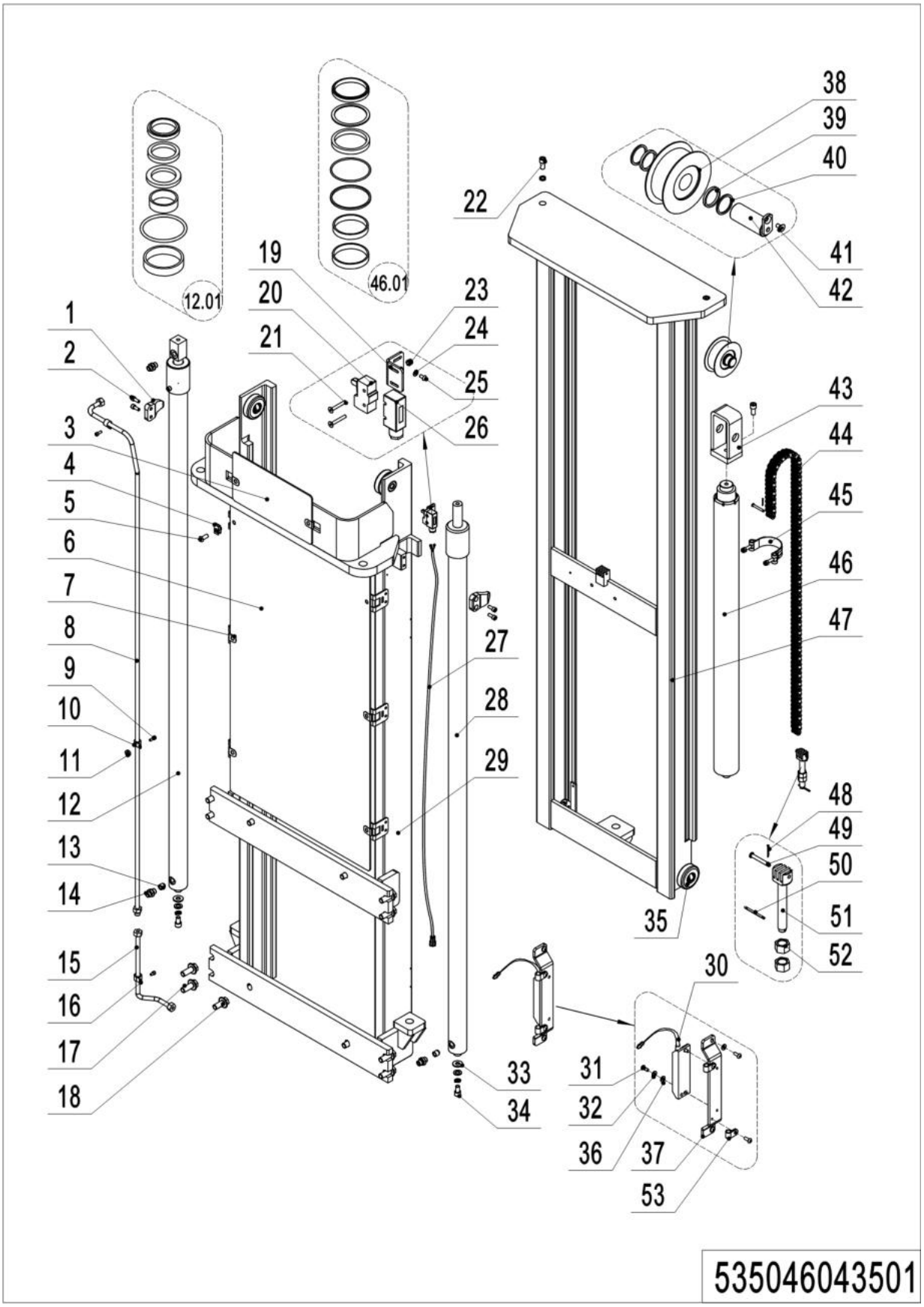

02 Two-stage mast full free lift (535046043501) Continuation 1

No.	Item Code	Mark	Item Description	Qty.	Substitute	Note
20	920200300001		Micro switch	1		
21	910200400007	1	Screw	2		
22	910200200097	1	Screw	3		
23	910300500001	1	Nut	2		
24	910400100003	1	Flat Washer	2		
25	910200300005	1	Screw	2		
26	920200300008		Protective Cover	1		
27	534733010011		Wire Harness	1		**2700**
27	534733010013		Wire Harness	1		**2900**
27	534733010014		Wire Harness	1		**3200**
27	534733010017		Wire Harness	1		**3600**
28	535043510007		Cylinder	1		**2700**
28	535043510006		Cylinder	1		**2900**
28	535043510005		Cylinder	1		**3200**
28	535043510004		Cylinder	1		**3600**
29	535043510039	2	Outer Mast(2700)	1		
29	535043510036	2	Outer Mast(2900)	1		
29	535043510038	2	Outer Mast(3200)	1		
29	535043510037	2	Outer Mast(3600)	1		
30	535933510005		Switch	1		
30	534733010041		Switch	1		EN1175:2020
31	910200500010	1	Screw	2		
31	910200300006	1	Screw	4		EN1175:2020
32	910400500003	1	Washer	2		
33	534744520015		Subplate	2		
34	910200200096	1	Screw	2		
35	940200300020		Compound Roller	4		
36	910400100003	1	Washer	4		EN1175:2020
37	534744520059		Protective Cover	1		
37	534744520080		Protective Cover	1		EN1175:2020

02 Two-stage mast full free lift (535046043501) Continuation 2

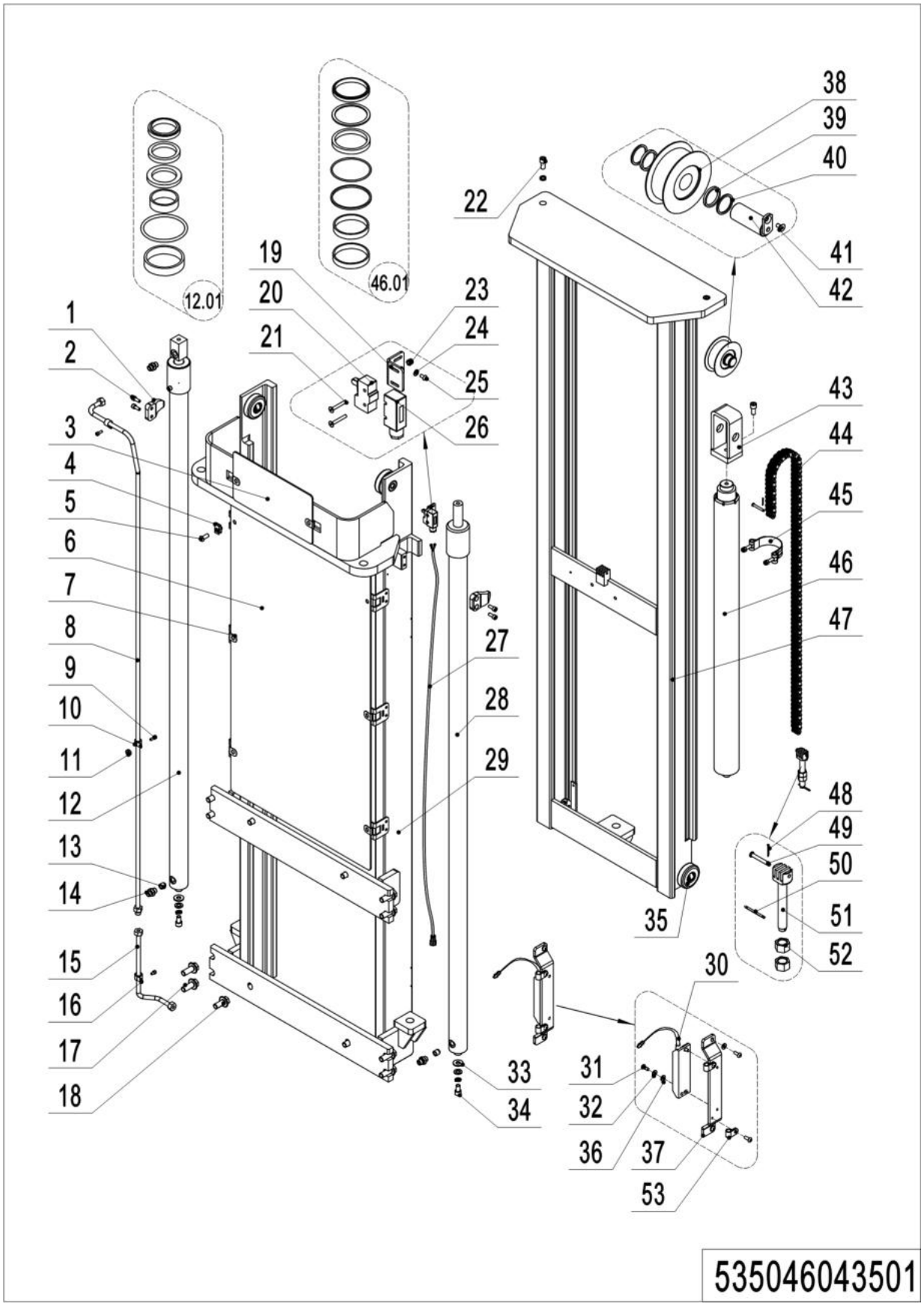

02 Two-stage mast full free lift (535046043501) Continuation 2

No.	Item Code	Mark	Item Description	Qty.	Substitute	Note
38	940200500011		Sprocket Bearing	1		
39	940600500009	1	Washer	2		
40	940600500008	1	Washer	2		
41	910200400016	1	Screw	1		
42	535045010008		Pin	1		
43	535043510034		Yoke	1		
44	535043510025		Chain	1		**2700**
44	535043510024		Chain	1		**2900**
44	535043510023		Chain	1		**3200**
44	535043510022		Chain	1		**3600**
45	940800600002		Hoop	1		
46	535043510012		Cylinder	1		**2700**
46	534743510011		Cylinder	1		**2900**
46	534743510010		Cylinder	1		**3200**
46	534743510009		Cylinder	1		**3600**
46.01	534798510003		Seal Kit	1		
47	535043510033	2	Inner Mast(2700)	1		
47	535043510032	2	Inner Mast(2900)	1		
47	535043510031	2	Inner Mast(3200)	1		
47	535043510030	2	Inner Mast(3600)	1		
48	910600600015	1	Cotter Pin	2		
49	941100800009		Pin	2		
50	910600600023	1	Cotter Pin	1		
51	535045020024		Chain Anchor	1		
52	910300200008	1	Nut	2		
53	921300200001		Cable fixer	2		

03 Triple Mast Standard Lift (535046045001)

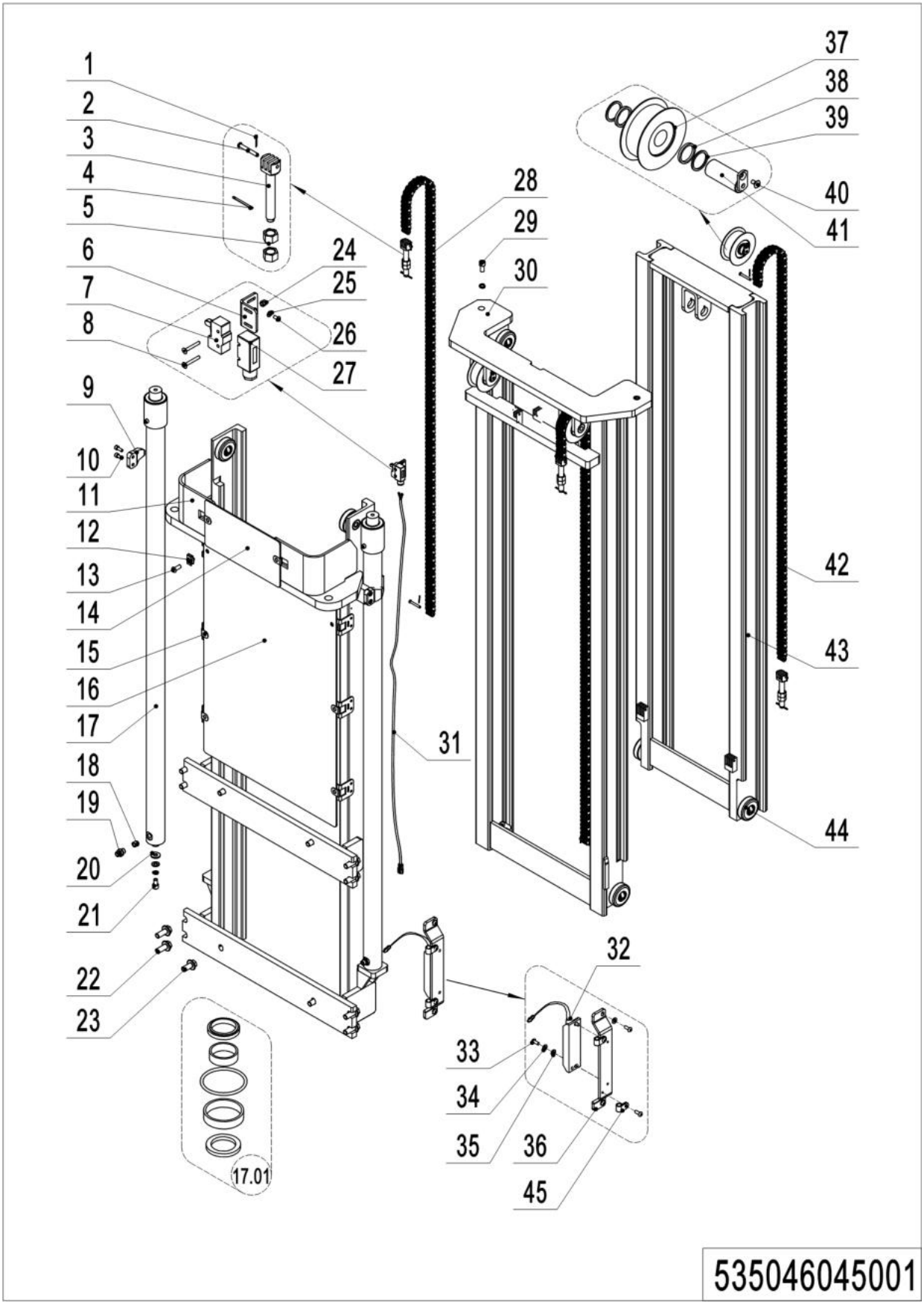

03 Triple Mast Standard Lift (535046045001)

No.	Item Code	Mark	Item Description	Qty.	Substitute	Note
1	910600600015		Cotter Pin	6		
2	941100800009		Pin	6		
3	535045020024		Chain Anchor	3		
4	910600600023		Cotter Pin	3		
5	910300200008		Nut	6		
6	534744520036		Fixing Plate	1		
7	920200300001		Microswitch	1		
8	910200400007		Screw	2		
9	275044020076		Fixing Plate	2		
10	910200200057		Screw	4		
11	535045010020		Outer Mast(4300)	1		
11	535045010019		Outer Mast(4600)	1		
12	940400400003		Cage Nut	2		
13	941100100005	1	Screw	2		
14	534744520037		Guard Plate	1		
15	940400300001		Spring Buckle	6		
16	535045020026		Guard Plate	1		**4300**
16	535044020011		Guard Plate	1		**4600**
17	535045010001		Cylinder	2		**4300**
17	535045010000		Cylinder	2		**4600**
17.01	535098510001		Seal Kit	2		
18	950600300001		Safety Valve	2		
19	950400400003		Joint	2		
20	534744520015		Subplate	2		
21	910200200096	1	Screw	2		
22	910100800006		Bolt	8		
23	910100800005		Bolt	4		
24	910300500001		Nut	2		
25	910400100003	1	Flat Washer	2		
26	910200300005	1	Screw	2		

1= Supply as package. 2= Supply with constraints. 3= Phasing-out supply. 4= Supply as assembly. 5= Check other tables.

03 Triple Mast Standard Lift (535046045001) Continuation

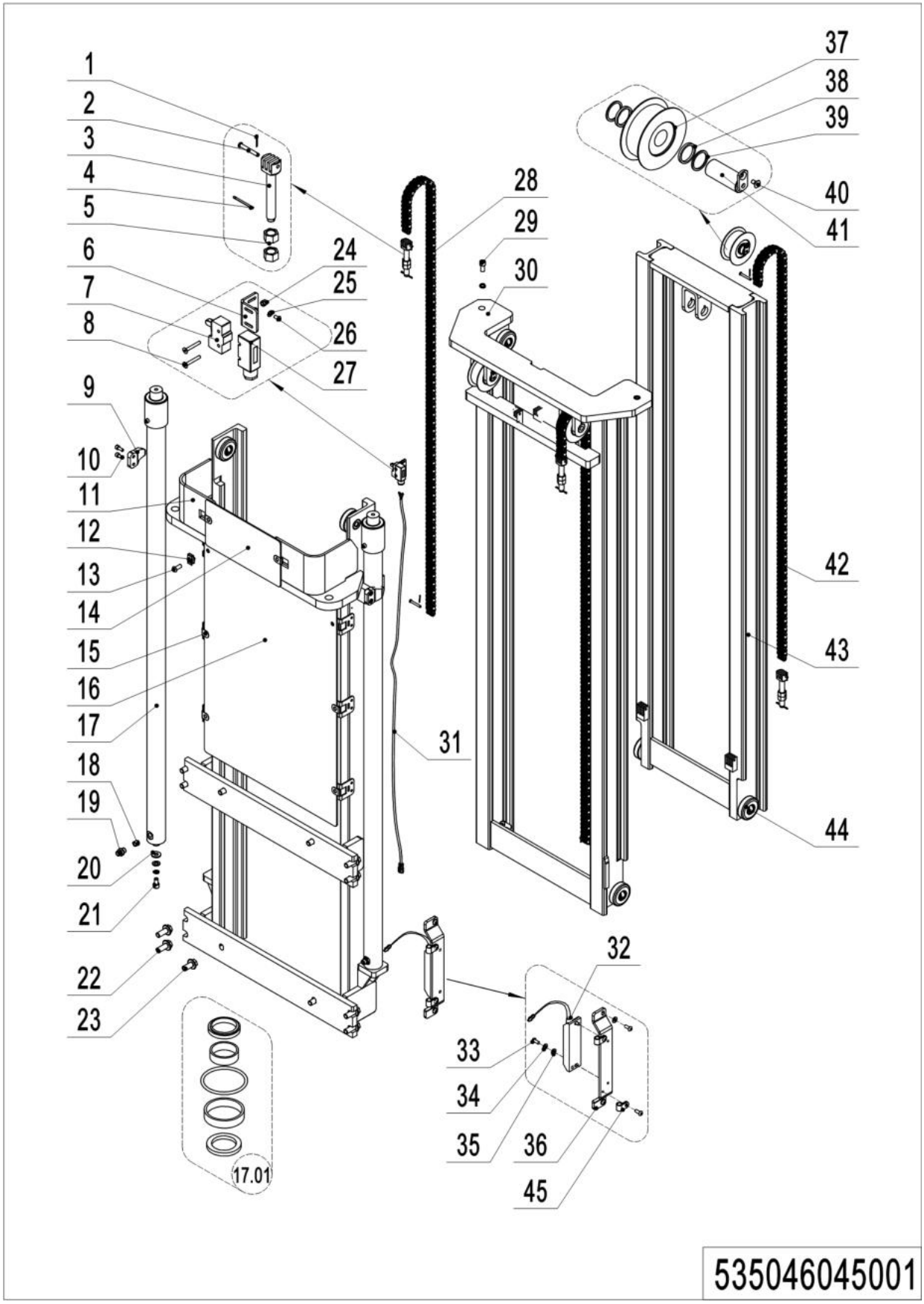

03 Triple Mast Standard Lift (535046045001) Continuation

No.	Item Code	Mark	Item Description	Qty.	Substitute	Note
27	920200300008		Protective Cover	1		
28	535044010010		Chain	2		**4300**
28	535045010010		Chain	2		**4600**
29	910200200097		Screw	2		
30	535045010016		Middle Mast(4300)	1		
30	535045010015		Middle Mast(4600)	1		
31	534733010013		Wire Harness	1		**4300**
31	534733010014		Wire Harness	1		**4600**
32	535933510005		Switch	1		
32	534733010041		Switch	1		EN1175:2020
33	910200500010	1	Screw	2		
33	910200300006	1	Screw	4		EN1175:2020
34	910400500003	1	Washer	4		
35	910400100003	1	Washer	4		EN1175:2020
36	534744520059		Protective Cover	1		
36	534744520080		Protective Cover	1		EN1175:2020
37	940200500011		Sprocket Bearing	1		
38	940600500009	1	Washer	2		
39	940600500008	1	Washer	2		
40	910200400016	1	Screw	3		
41	535045010008		Pin	3		
42	535044010011		Chain	1		**4300**
42	535044010010		Chain	1		**4600**
43	535045010018		Inner Mast(4300)	1		
43	535045010017		Inner Mast(4600)	1		
44	940200300020		Compound Roller	8		
45	921300200001		Cable fixer	2		

04 Triple Mast Full Free Lift (535046044501)

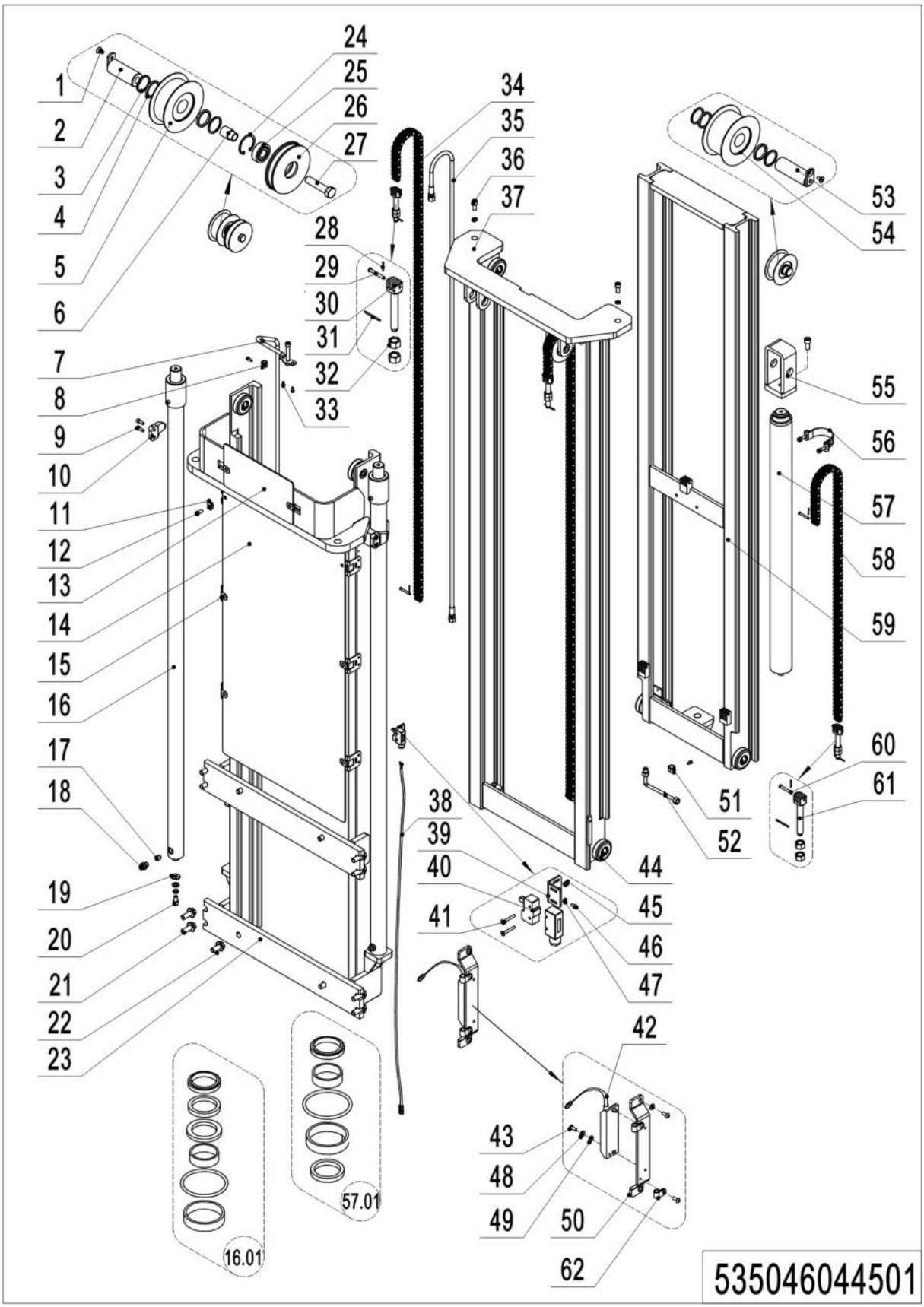

04 Triple Mast Full Free Lift (535046044501)

No.	Item Code	Mark	Item Description	Qty.	Substitute	Note
1	910200400016	1	Screw	3		
2	533544510006		Pin	2		
3	940200500010		Sprocket Bearing	2		
4	940600500009		Washer	6		
5	940600500008		Washer	6		
6	535944520001		Sleeve	1		
7	535044510014		Steel Tube	1		**4000**
7	535044510013		Steel Tube	1		**4300**
7	535044510012		Steel Tube	1		**4600**
8	951000100001		Hose Clamp	2		
9	910200200057		Screw	4		
10	275044020076		Fixing Plate	2		
11	940400400003		Cage Nut	2		
12	941100100005	1	Screw	2		
13	534744520037		Guard Plate	1		
14	535044520004		Guard Plate	1		**4000**
14	535045020026		Guard Plate	1		**4300**
14	535044020011		Guard Plate	1		**4600**
15	940400300001		Spring Buckle	6		
16	535044510002		Cylinder	1		**4000**
16	535044510001		Cylinder	1		**4300**
16	535044510000		Cylinder	1		**4600**
16.01	535098510000		Seal Kit	2		
17	950600300001		Safety Valve	3		
18	950400400003		Joint	3		
19	534744520015		Subplate	2		
20	910200200096	1	Screw	2		
21	910100800006		Bolt	8		
22	910100800005	1	Bolt	4		
23	535044510034	2	Outer Mast(4000)	1		**4000**

04 Triple Mast Full Free Lift (535046044501) Continuation 1

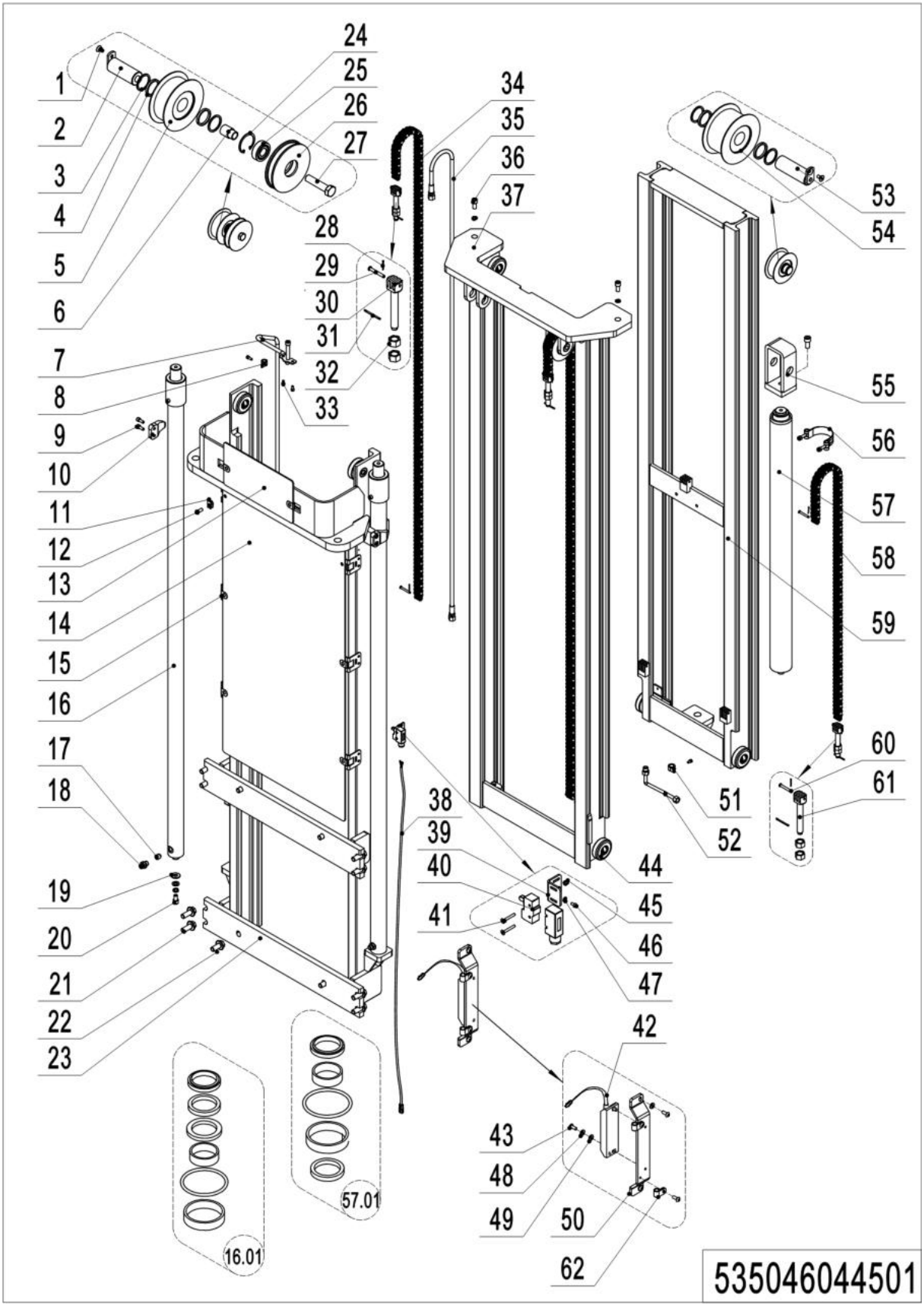

04 Triple Mast Full Free Lift (535046044501) Continuation 1

No.	Item Code	Mark	Item Description	Qty.	Substitute	Note
23	535044510033	2	Outer Mast(4300)	1		**4300**
23	535044510032	2	Outer Mast(4600)	1		**4600**
24	910401400013	1	Circlip	1		
25	910700200019		Bearing	1		
26	535944520000		Pulley	1		
27	910100100073	1	Bolt	1		
28	910600600006	1	Cotter Pin	6		
29	941100800012		Pin	4		
30	532644520038		Chain Anchor	2		
31	910600600023	1	Cotter Pin	3		
32	910300200008	1	Nut	6		
33	910200400016	1	Screw	2		
34	535044510020		Chain	2		**4000**
34	534145010005		Chain	2		**4300**
34	535044510016		Chain	2		**4600**
35	535044510019		Hose	1		**4000**
35	532644520143		Hose	1		**4300**
35	532644520144		Hose	1		**4600**
36	910200200097	1	Screw	3		
37	535044510026		Middle Mast(4000)	1		
37	535044510025		Middle Mast(4300)	1		
37	535044510024		Middle Mast(4600)	1		
38	534733010012		Wire Harness	1		**4000**
38	534733010013		Wire Harness	1		**4300**
38	534733010014		Wire Harness	1		**4600**
39	534744520036		Fixing Plate	1		
40	920200300001		Microswitch	1		
41	910200400007	1	Screw	2		
42	535933510005		Switch	1		
42	534433510001		Switch	1		EN1175:2020

1= Supply as package. 2= Supply with constraints. 3= Phasing-out supply. 4= Supply as assembly. 5= Check other tables.

04 Triple Mast Full Free Lift (535046044501) Continuation 2

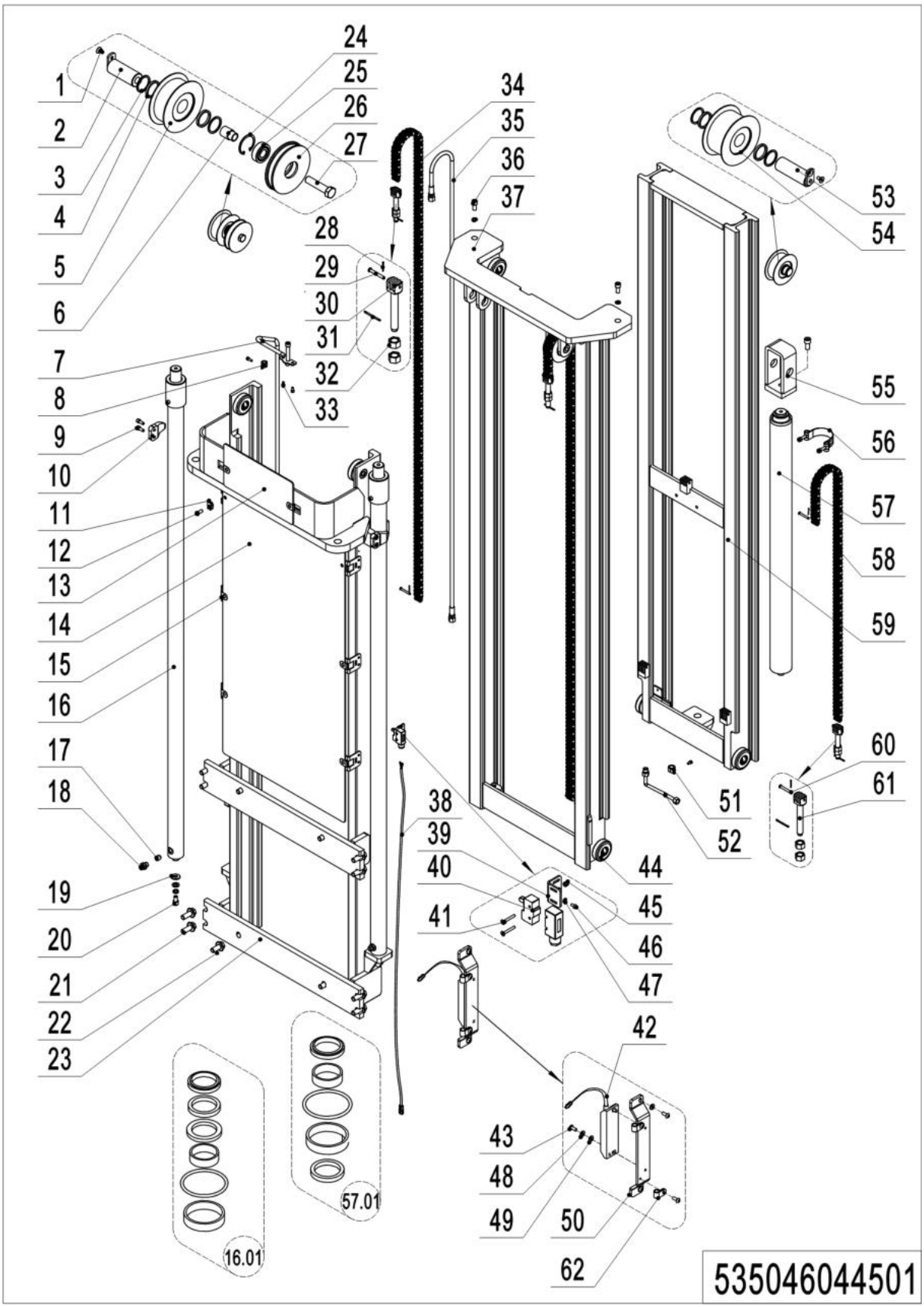

04 Triple Mast Full Free Lift (535046044501) Continuation 2

No.	Item Code	Mark	Item Description	Qty.	Substitute	Note
43	910200500010	1	Screw	2		
43	910200300006	1	Screw	4		EN1175:2020
44	940200300022		Compound Roller	8		
45	910300500001	1	Nut	2		
46	910200300005	1	Screw	2		
47	910400100003	1	Flat Washer	2		
48	910400500003	1	Washer	2		
49	910400100003	1	Washer	4		EN1175:2020
50	534744520059		Protective Cover	1		
50	534744520080		Protective Cover	1		EN1175:2020
51	951000100003		Hose Clamp	1		
52	535044510015		Steel Tube	1		
53	535045010008		Pin	1		
54	940200500011		Sprocket Bearing	1		
55	535043510034		Yoke	1		
56	940800600002		Hoop	1		
57	535043510012		Cylinder	1		
57	534744510013		Cylinder	1		
57	534744510012		Cylinder	1		
57. 01	534798510001		Seal Kit	1		
58	535043510025		Chain	1		
58	535044510030		Chain	1		
58	535043510023		Chain	1		
59	535044510029		Inner Mast(4000)	1		
59	535044510028		Inner Mast(4300)	1		
59	535044510027		Inner Mast(4600)	1		
60	941100800009		Pin	1		
61	535045020024		Chain Anchor	1		
62	921300200001		Cable fixer	2		

Chapter 5: Steering System, Braking System, Wheels

01 Tiller Unit (504446011001)

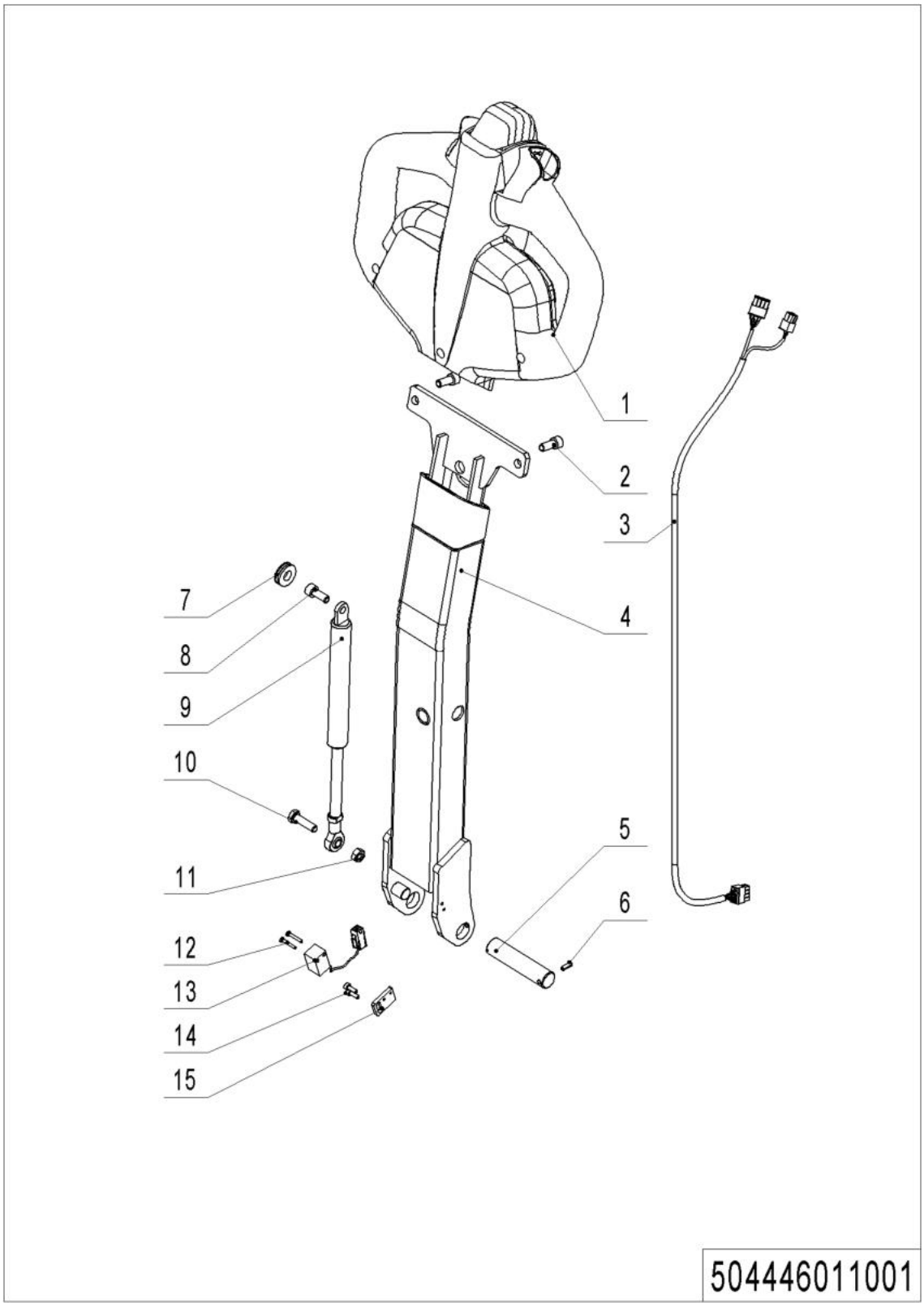

01 Tiller Unit (504446011001)

No.	Item Code	Mark	Item Description	Qty.	Substitute	Note
1	922100100001		Control Tiller	1		See 535946011002
1	922100100099		Tiller	1		**EN1175:2020, See 566546010002**
2	910200200057	1	Screw	2		
3	534733010001		Wire Harness	1		
4	504411010001		Tiller	1		
5	504411020011		Axle	1		
6	910600400009	1	Spring Pin	1		
7	502311020009		Close Plate	1		
8	941100400001	1	Screw	1		
9	940400100011		Air Spring	1		
10	910100300024	1	Bolt	1		
11	910300100006	1	Nut	1		
12	910200500015	1	Screw	2		
13	505633510002		Proximity Switch	1		
14	910200200014	1	Screw	2		
15	504411020009		Baseboard	1		

02 Control Handle (535946011002)

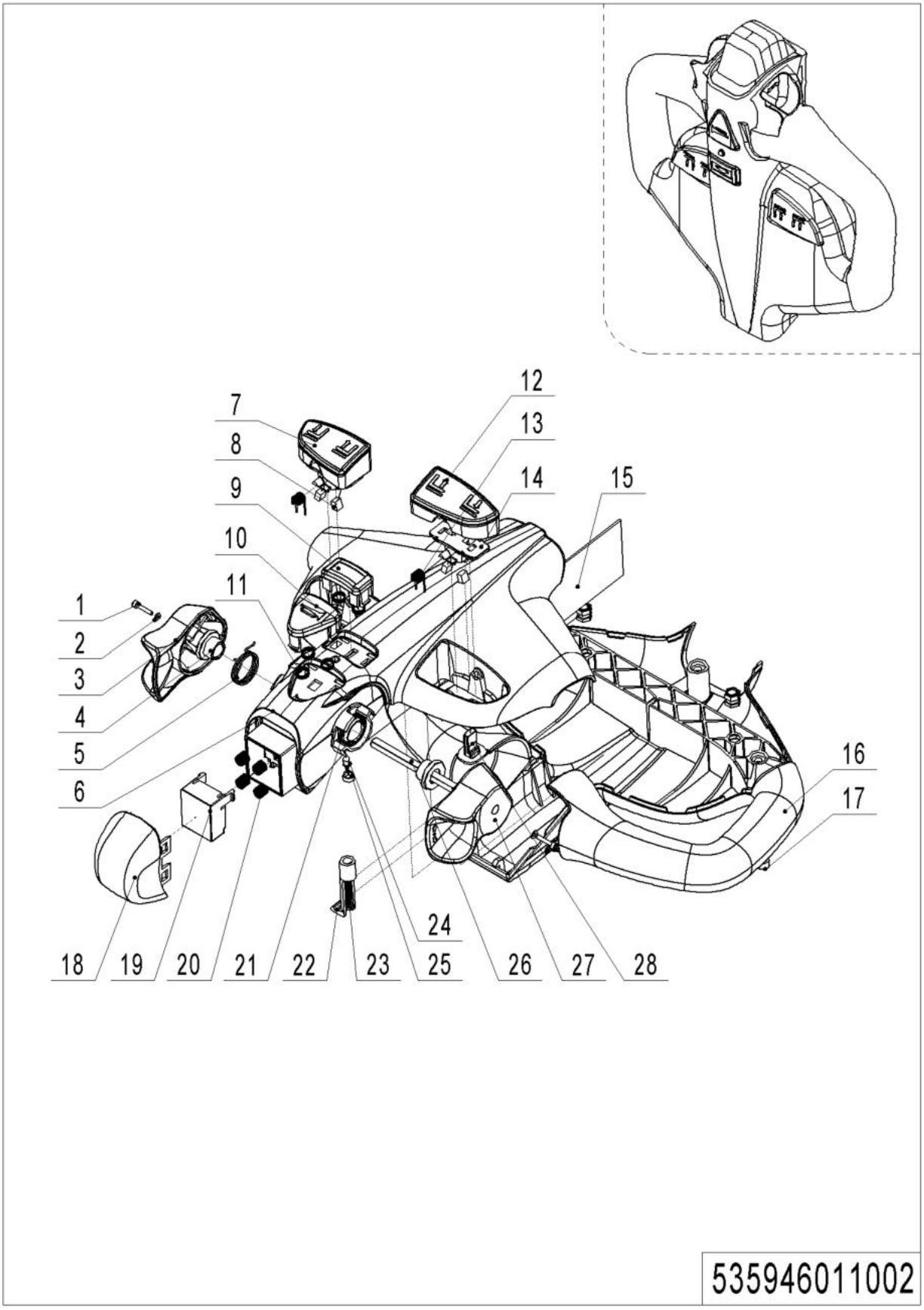

1= Supply as package. 2= Supply with constraints. 3= Phasing-out supply. 4= Supply as assembly. 5= Check other tables.

02 Control Handle (535946011002)

No.	Item Code	Mark	Item Description	Qty.	Substitute	Note
--	922100100001		Tiller	1		
1	505698520008		Screw	2		
2	505698520009		Washer	2		
3	505698520001		Traction lever	1		
4	505698520004		Sleeve	2		
5	505698520027		Torsional Spring	1		
6	505698520014		Handle Cap	1		
7	505698520016		Button cap	1		
8	505698520005		Magnet	4		
9	505698520021		Button Cap	1		
10	505698520002		Horn Button	1		
11	505698520003		Spring	5		
12	505698520022		Button Cap	1		
13	505698520018		Torsional Spring	2		
14	505698520017		Fixing Base	2		
15	505698520028		circuit Board	1		
16	505698520015		Handle Cap	1		
17	505698520007		Screw	3		
18	505698520020		Button Cap-	1		
19	505698520019		Pedestal	1		
20	505698520006		Spring	4		
21	505698520026		Torsional Spring	1		
22	505698520012		Clamp	1		
23	505698520023		Screw	1		
24	505698520024		Light	1		
25	505698520025		Lamp Holder	1		
26	505698520011		Axle-Traction lever	1		
27	505698520010		Traction lever	1		
28	505698520013		Sensor	2		

03 Control Handle (EN1175:2020) (566546010002)

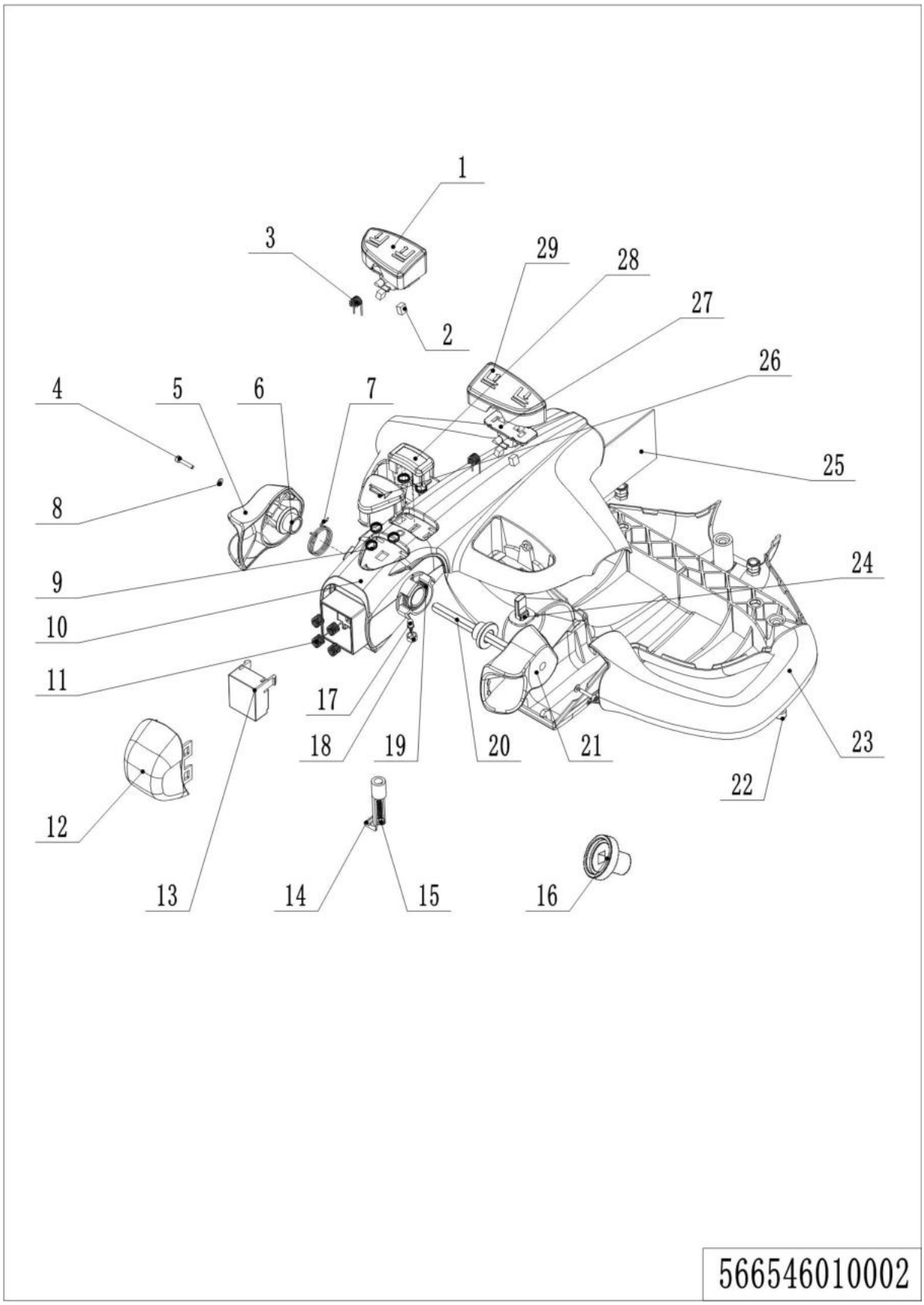

03 Control Handle (EN1175:2020) (566546010002)

No.	Item Code	Mark	Item Description	Qty.	Substitute	Note
1	505698520016		Button cap	1		
2	505698520005		Magnet	4		
3	505698520018		Torsional Spring	2		
4	505698520008		Screw	2		
5	505698520001		Traction lever	1		
6	505698520004		Sleeve	2		
7	505698520027		Torsional Spring	1		
8	505698520009		Washer	2		
9	505698520003		Spring	5		
10	505698520099		Handle Cap	1		
11	505698520006		Spring	4		
12	505698520020		Button Cap-	1		
13	505698520100		Pedestal	1		
14	505698520012		Clamp	1		
15	505698520023		Screw	1		
16	505698520102		Magnet holder	2		
17	505698520024		Light	1		
18	505698520025		Lamp Holder	1		
19	505698520026		Torsional Spring	1		
20	505698520011		Axle-Traction lever	1		
21	505698520010		Traction lever	1		
22	505698520007		Screw	3		
23	505698520015		Handle Cap	1		
24	505698520013		Sensor	2		
25	505698520101		circuit Board	1		
26	505698520002		Horn Button	1		
27	505698520017		Fixing Base	2		
28	505698520021		Button Cap	1		
29	505698520022		Button Cap	1		

04 Load Wheel (532946017001)

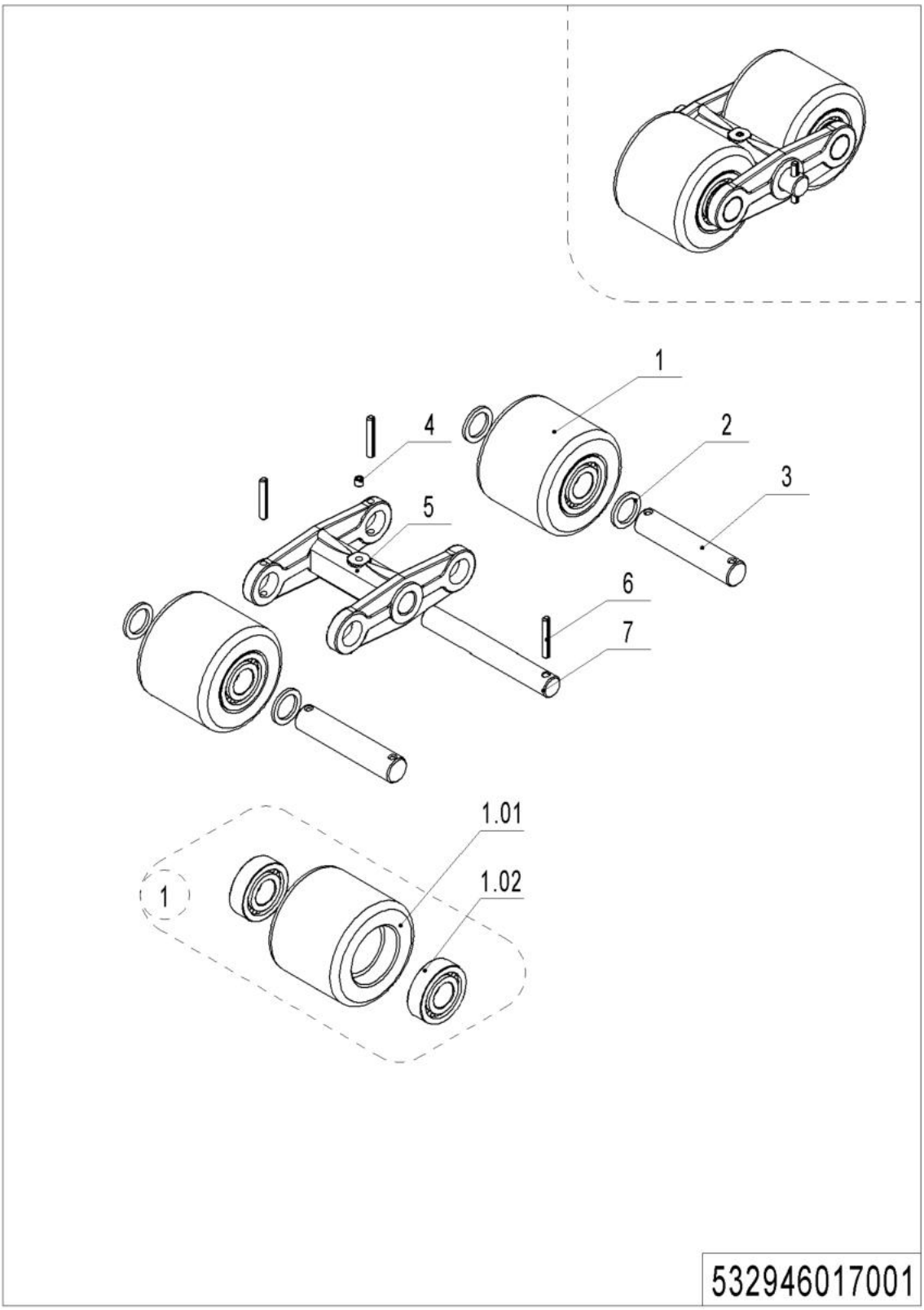

1= Supply as package. 2= Supply with constraints. 3= Phasing-out supply. 4= Supply as assembly. 5= Check other tables.

05 Load Wheel (532946017001)

No.	Item Code	Mark	Item Description	Qty.	Substitute	Note
--	532998510000		Wheel Assembly	2		
1	532998510001		Wheel Kits	4		
1.01	940300300009		WheelΦ84x70	4		
1.02	910700200019		Bearing	8		
2	940600500004		Washer	8		
3	504117020005		Axle	4		
4	911200100001		Oil Cup	2		
5	504117020004		Wheel Carrier	2		
6	910600400027	1	Spring Pin	6		
7	504117020003		Axle	2		

05 Caster (534746016501)

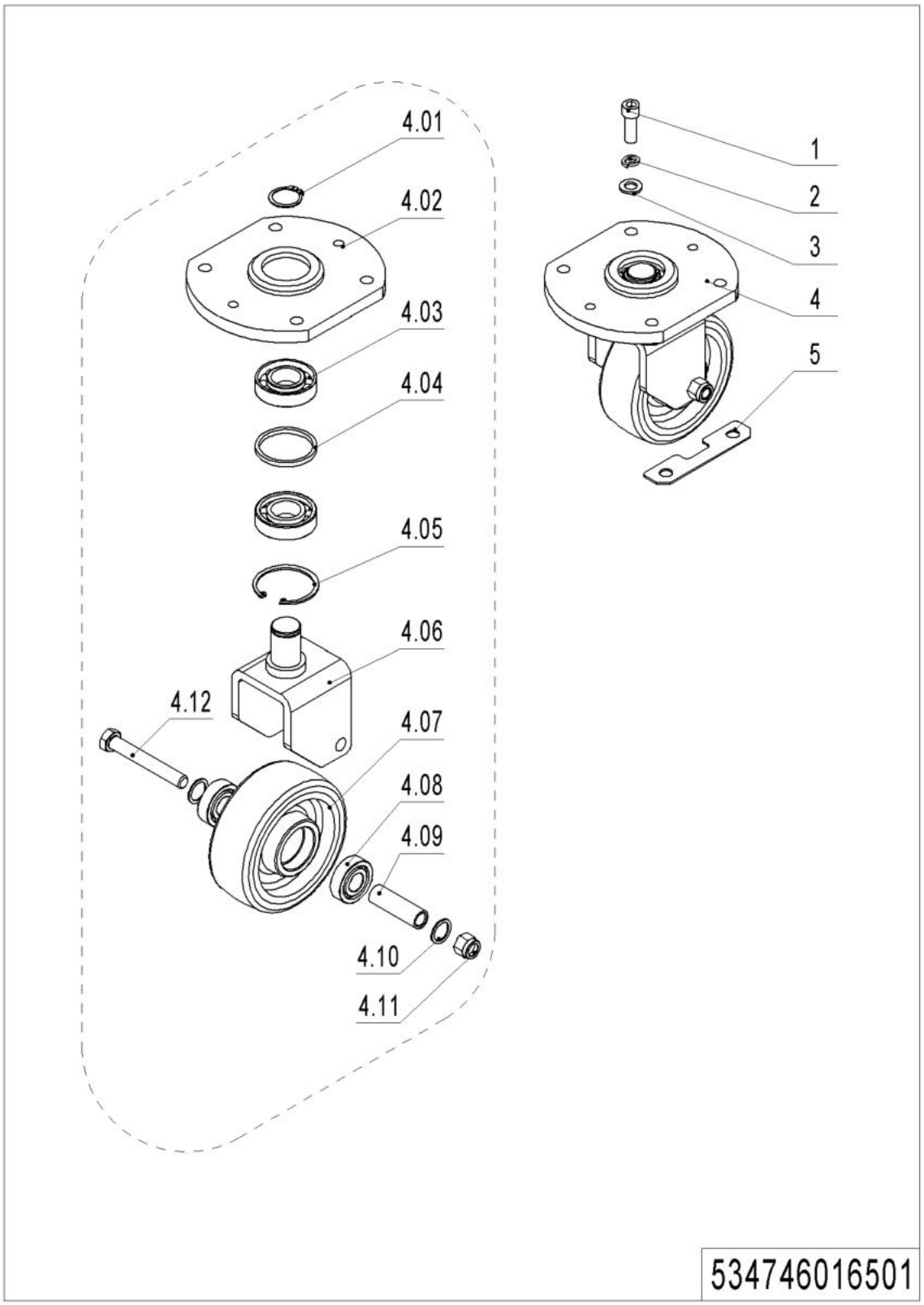

05 Caster (534746016501)

No.	Item Code	Mark	Item Description	Qty.	Substitute	Note
1	910200200099		Screw	4		
2	910400500008		Spring Washer	4		
3	910400100008		Flat Washer	4		
4	534716510002		Caster Assembly	1		
4.01	910401300016		Circlip	1		
4.02	534716510000		Bracket	1		
4.036	910700400004		Bearing	2		
4.04	532616520001		Check Ring	1		
4.05	910401400018	1	Circlip	1		
4.06	534716510001	2	Wheel Carrier	1		
4.07	940300300020		WheelΦ150x54	1		
4.08	910700200019		Bearing	2		
4.09	532616520003		Bushing	1		
4.10	940600500014		Washer	2		
4.11	910300500007	1	Nut	1		
4.12	910100100069	1	Bolt	1		
5	534721520026		Subplate	6		

Chapter 6: Electrical Parts

01 Display Assembly （534746010001）

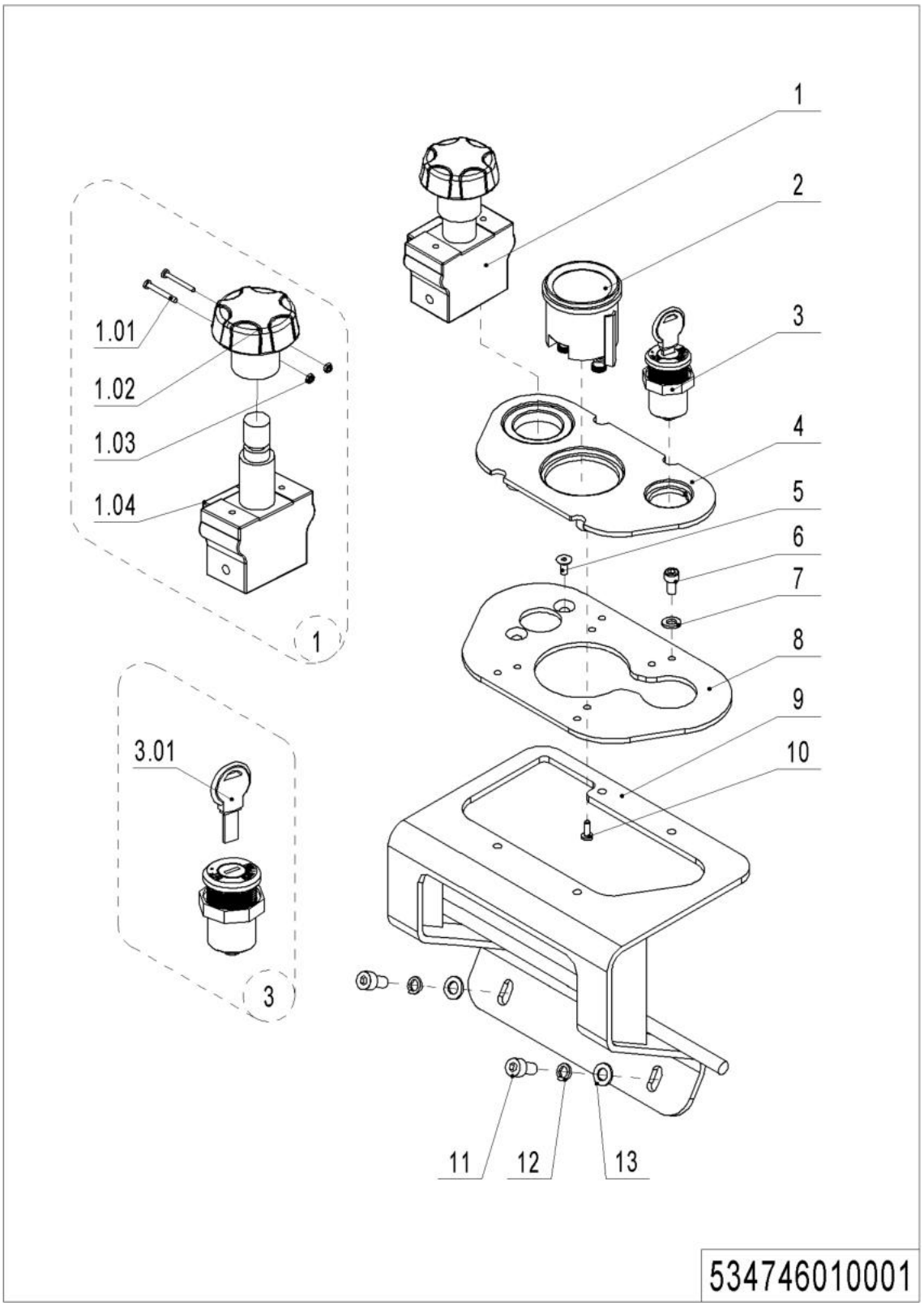

1= Supply as package. 2= Supply with constraints. 3= Phasing-out supply. 4= Supply as assembly. 5= Check other tables.

01 Display Assembly（534746010001）

No.	Item Code	Mark	Item Description	Qty.	Substitute	Note
1	920200100001		Emergency Button	1		
1.01	910200500016		Screw	2		
1.02	505698520029		Button	1		
1.03	910300100002		Nut	2		
1.04	505698520030		Proximity Switch	1		
2	921100100012		仪表	1		
3	505634010000		Key Switch	1		
3.01	505698520031		Key	1		
4	534710020004		Panel	1		
5	910200400010		Screw	2		
6	910200200036		Screw	4		
7	910400100005		Flat Washer	4		
8	534710020005		Fixing Base	1		
9	534710010000		Mounting Plate	1		
10	910201300001		Screw	4		
11	910200200055		Screw	2		
12	910400500006		Spring Washer	2		
13	910400100006		Flat Washer	2		

02 Display Assembly(EN1175:2020) (534746010001)

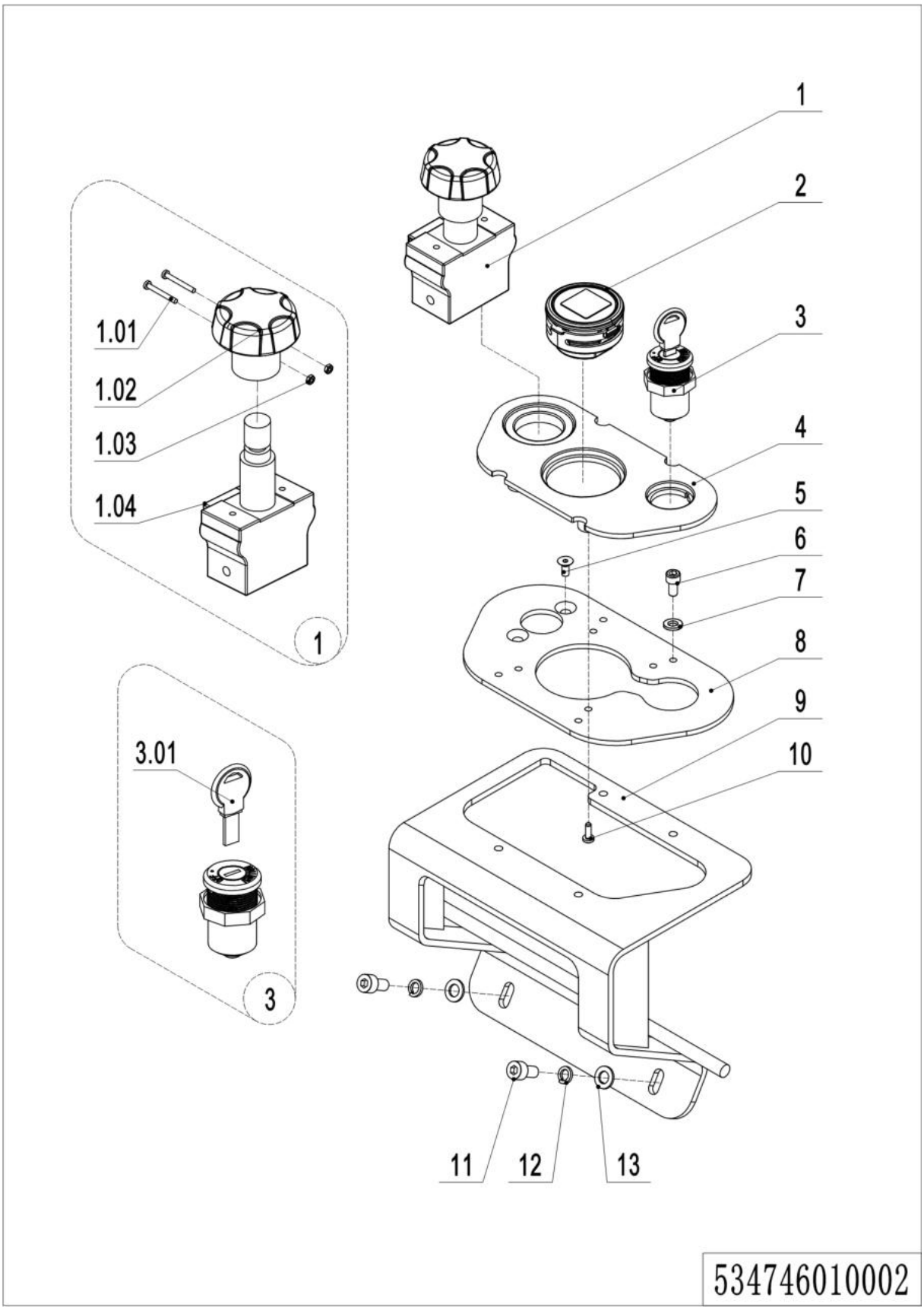

02 Display Assembly (EN1175:2020) (534746010001)

No.	Item Code	Mark	Item Description	Qty.	Substitute	Note
1	920200100001		Emergency Button	1		
1.01	910200500016		Screw	2		
1.02	505698520029		Button	1		
1.03	910300100002		Nut	2		
1. 04	505698520030		Proximity Switch	1		
2	921100100116		Display	1		
3	505634010000		Key Switch	1		
3	505634010001		Key Switch	1		**Only for lithium battery**
3.01	505698520031		Key	1		
4	534710020004		Panel	1		
5	910200400010		Screw	2		
6	910200200036		Screw	4		
7	910400100005		Flat Washer	4		
8	534710020005		Fixing Base	1		
9	534710010000		Mounting Plate	1		
10	910201300001		Screw	4		
11	910200200055		Screw	2		
12	910400500006		Spring Washer	2		
13	910400100006		Flat Washer	2		

03 Electronic Components (534446033001)

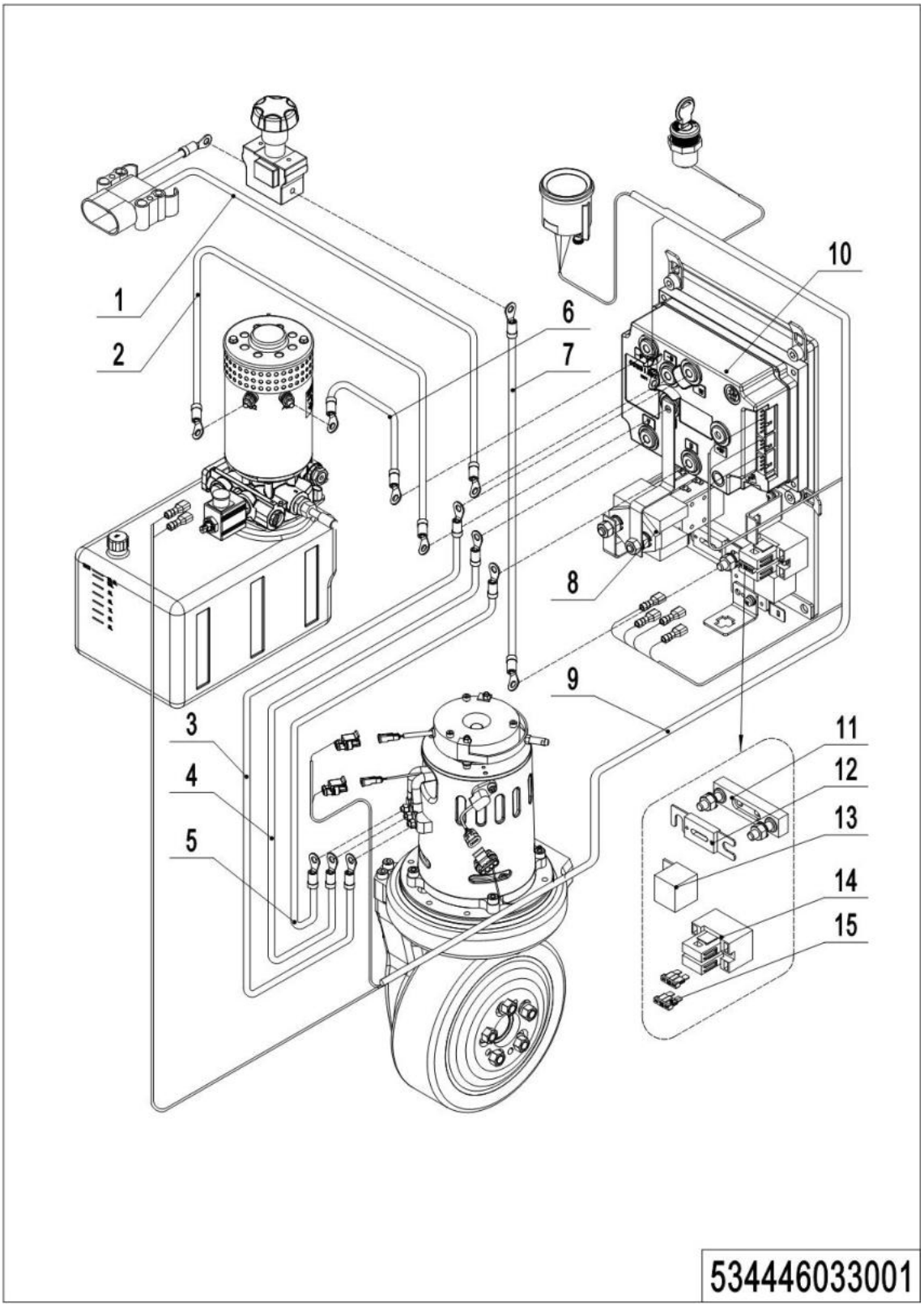

1= Supply as package. 2= Supply with constraints. 3= Phasing-out supply. 4= Supply as assembly. 5= Check other tables.

03 Electronic Components（534446033001）

No.	Item Code	Mark	Item Description	Qty.	Substitute	Note
1	534733010008		Wire Harness	1		
2	534433010000		Cable	1		
3	534733010005		Cable	1		
4	534733010004		Cable	1		
5	534733010003		Cable	1		
6	534433010001		Cable	1		
7	534733010009		Cable	1		
8	920700100002		Contactor	1		
9	534733010000		Wire Harness	1		
10	921400100048		Controller	1		
11	920100400002		Fuse Holder	1		
12	920100100013		Fuse350A	1		
13	920800100001		Relay	1		
14	920100400005		Fuse Holder	1		
15	920100200002		Fuse10A	2		

04 Electronic Components(EN1175:2020) (534746033002)

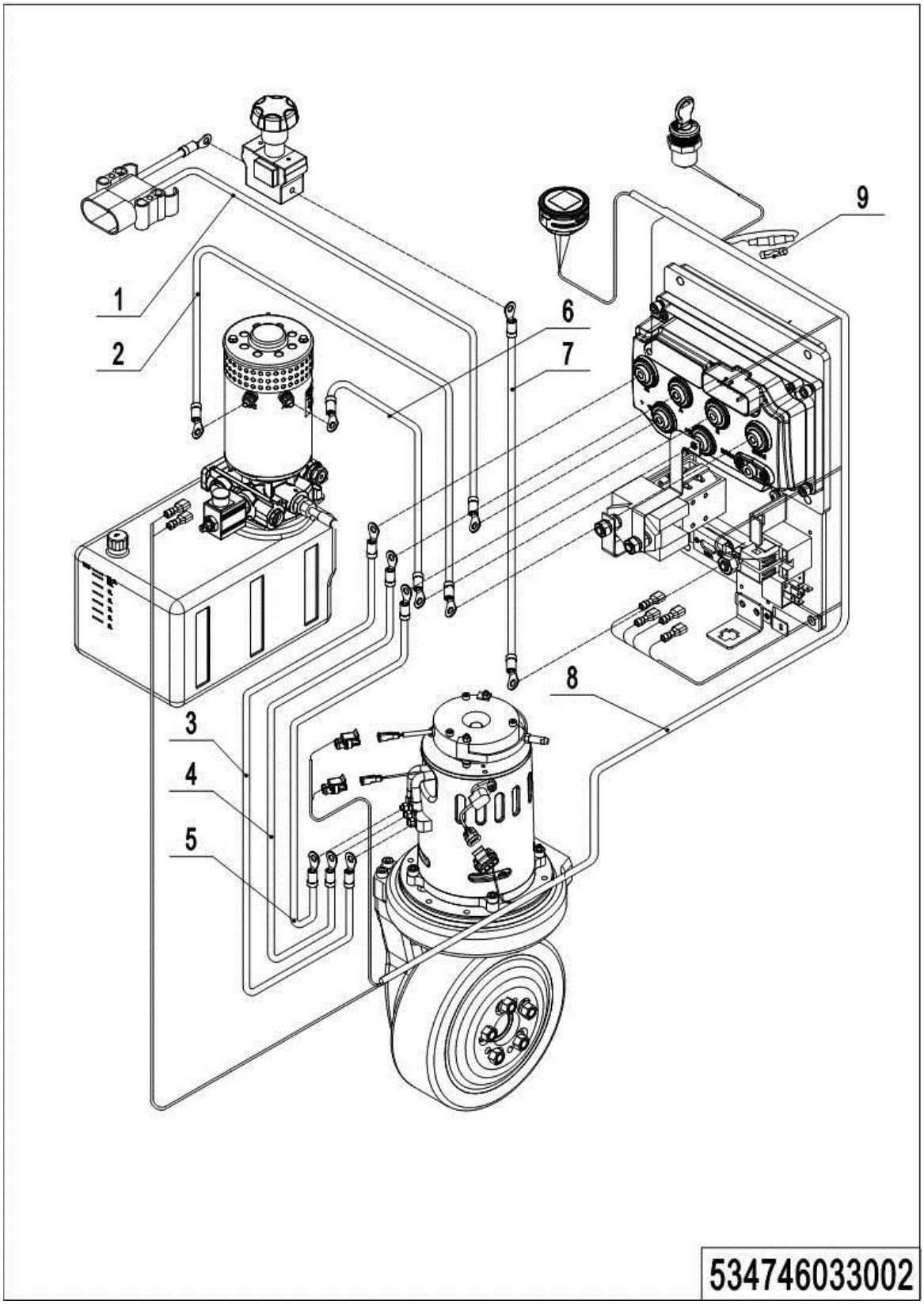

04 Electronic Components (EN1175:2020) (534746033002)

No.	Item Code	Mark	Item Description	Qty.	Substitute	Note
1	534733010031		Wire Harness	1		
1	534733010042		Wire Harness	1		**Only for lithium battery**
2	534733010033		Cable	1		
3	534733010034		Cable	1		
4	534733010027		Cable	1		
5	534733010028		Cable	1		
6	534733010029		Cable	1		
7	534733010009		Cable	1		
8	534733010026		Wire Harness	1		
9	920100300001		Fuse 0.5A	1		

05 Electric control assembly (534746033003) (EN1175:2020)

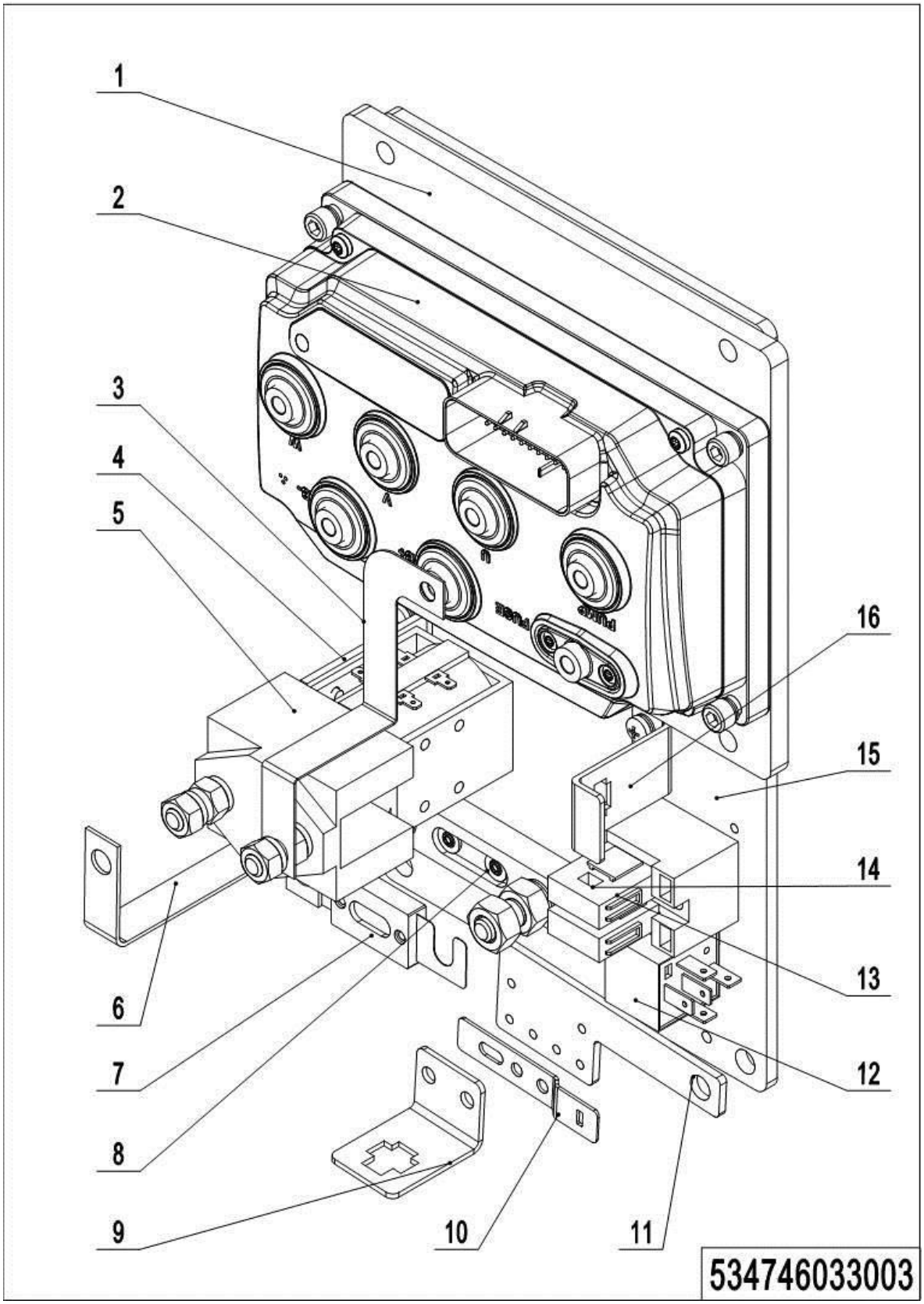

05 Electric control assembly (534746033003)

No.	Item Code	Mark	Item Description	Qty.	Substitute	Note
1	534733020003		Aluminium plate	1		
2	921400100124		Controller	1		
3	534733020004		Copper bar	1		
4	921300400004		Fixed mount	1		
5	920700100002		Contactor	1		
6	534733020002		Copper bar	1		
7	920100100013		Fuse350A 350A	1		
8	920100400002		Fuse Holder	1		
9	921300300002		Fixed mount	1		
10	921300300005		Fixed mount	1		
11	921300300008		Fixed mount	1		
12	920800100011		Relay	1		
13	920100400005		Fuse Holder	1		
14	920100200002		Fuse10A 10A	1		
15	534721520027		Mounting plate	1		
16	921300300001		Fixed mount	1		

06 Charger (534746036501)

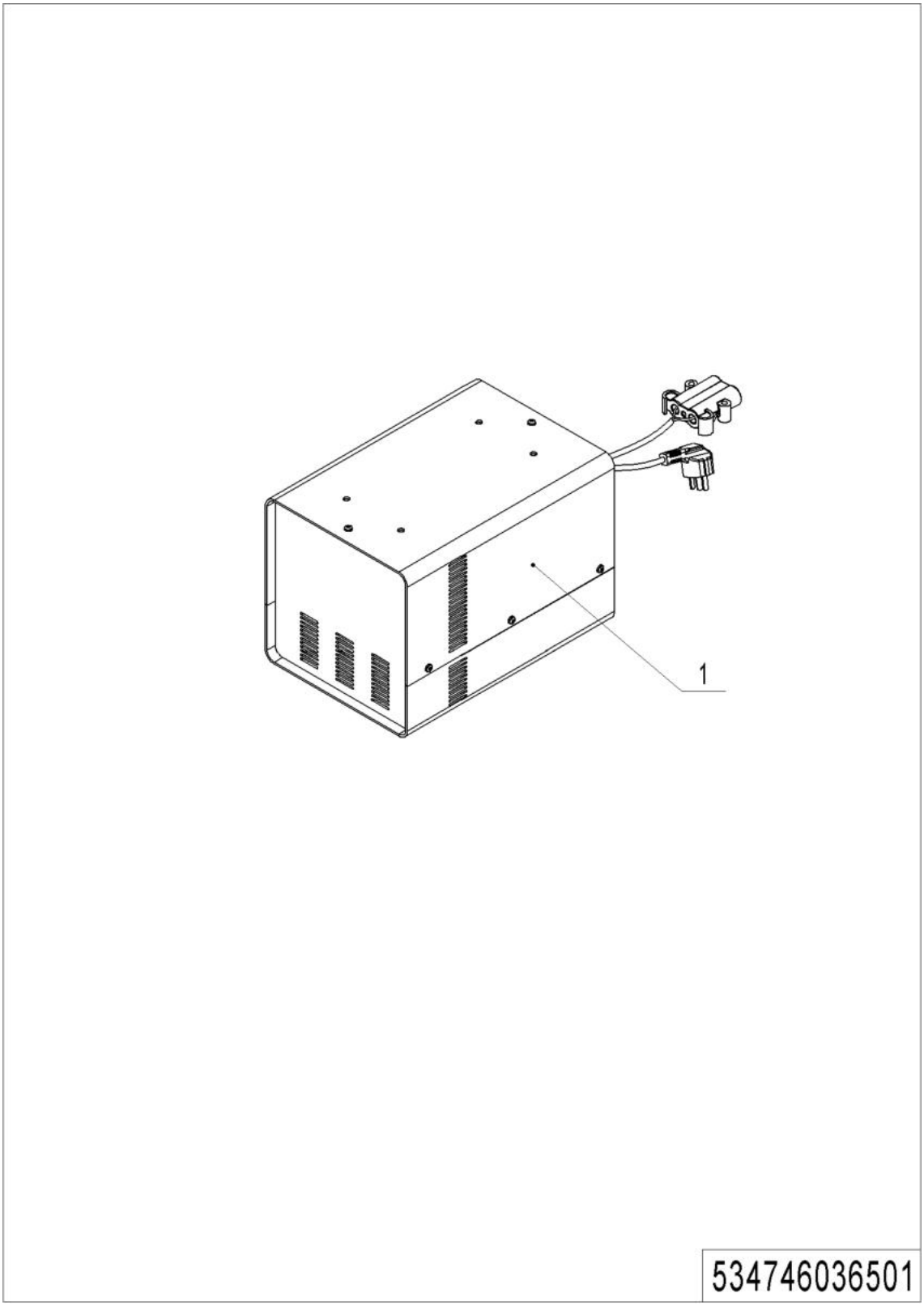

1= Supply as package. 2= Supply with constraints. 3= Phasing-out supply. 4= Supply as assembly. 5= Check other tables.

06 Charger (534746036501)

No.	Item Code	Mark	Item Description	Qty.	Substitute	Note
1	921000200183		Charger24V35A(Aisa-CHN)	1		
1	921000200184		Charger24V35A(Aisa-ENG)	1		
1	921000200185		Charger24V35A（EU）	1		
1	921000200186		Charger24V35A（ENG）	1		
1	921000200187		Charger24V35A（AUS）	1		
1	921000200188		Charger24V35A（USA）	1		
1	921000200365		Charger24V35A（ISR）	1		
1	921000200361		Charger24V35A（ITA）	1		

07 Charger (Lithium battery) (535946036502)

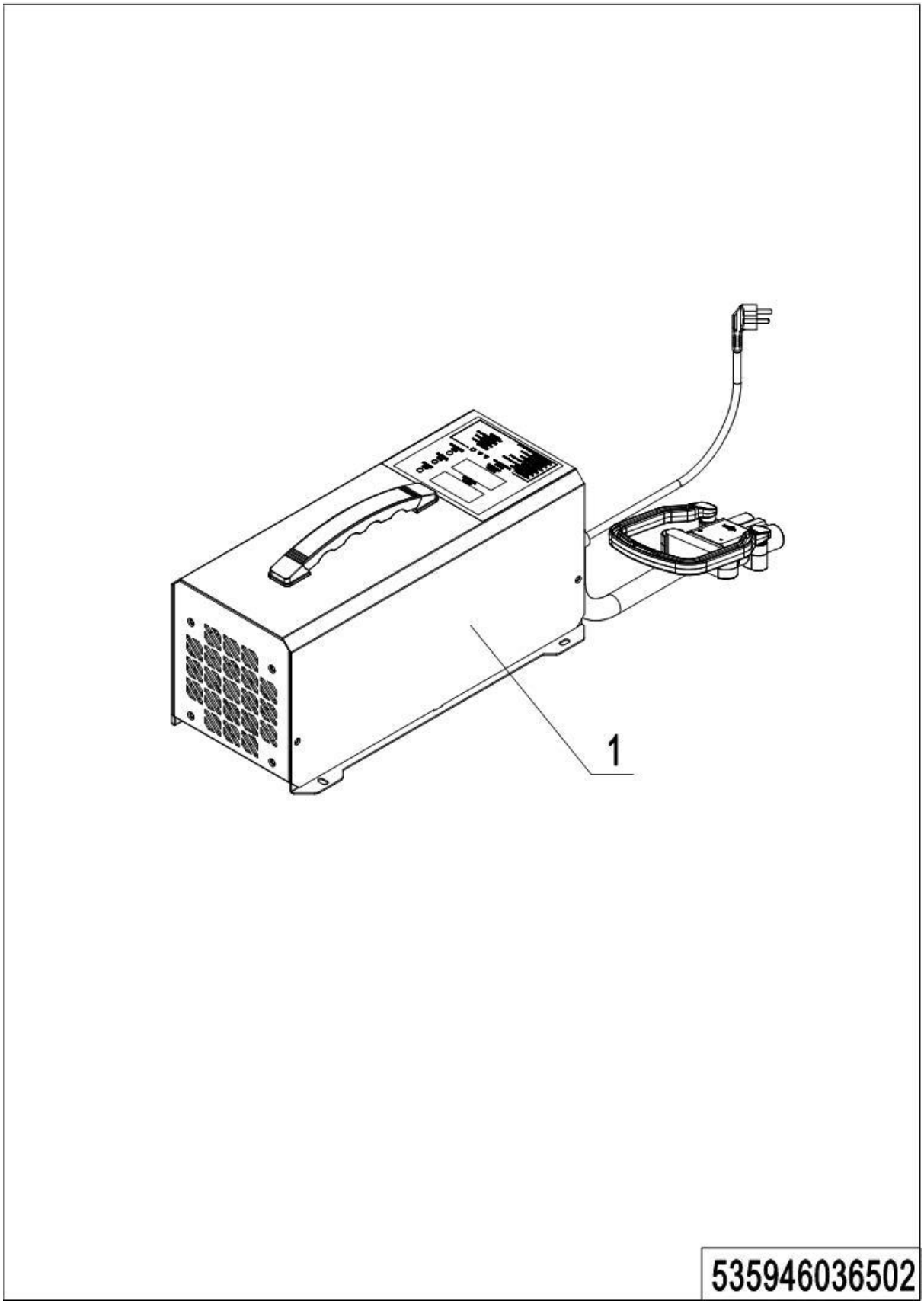

1= Supply as package. 2= Supply with constraints. 3= Phasing-out supply. 4= Supply as assembly. 5= Check other tables.

07 Charger (Lithium battery) (535946036502)

No.	Item Code	Mark	Item Description	Qty.	Substitute	Note
1	921000200522		Charger24V60A (Aisa-CHN)	1		
1	921000200523		Charger24V60A (Aisa-ENG)	1		
1	921000200524		Charger24V60A (EU)	1		
1	921000200525		Charger24V60A (ENG)	1		
1	921000200526		Charger24V60A (AUS)	1		
1	921000200527		Charger24V60A (ISR)	1		
1	921000200528		Charger24V60A (ARG)	1		
1	921000200529		Charger24V60A (RSA)	1		small plug
1	921000200530		Charger24V60A (USA)	1		single-phase
1	921000200631		Charger24V60A (THA)	1		
1	921000200663		Charger24V60A (RSA)	1		large plug
1	921000200724		Charger24V60A (BRA)	1		
1	921000200690		Charger24V60A (USA)	1		Three-phase
1	921000200649		Charger24V60A (Aisa-CHN)	1		
1	921000200533		充电器 24V80A(EU)	1		
1	921000200534		充电器 24V80A((ENG)	1		
1	921000200535		充电器 24V80A(AUS)	1		
1	921000200536		充电器 24V80A(ISR)	1		
1	921000200537		充电器 24V80A(ARG)	1		
1	921000200538		充电器 24V80A(RSA)	1		small plug
1	921000200539		充电器 24V80A(USA)	1		ANDSON80
1	921000200652		充电器 24V80A(Aisa-CHN)	1		

08 Traction Battery (534746037001)

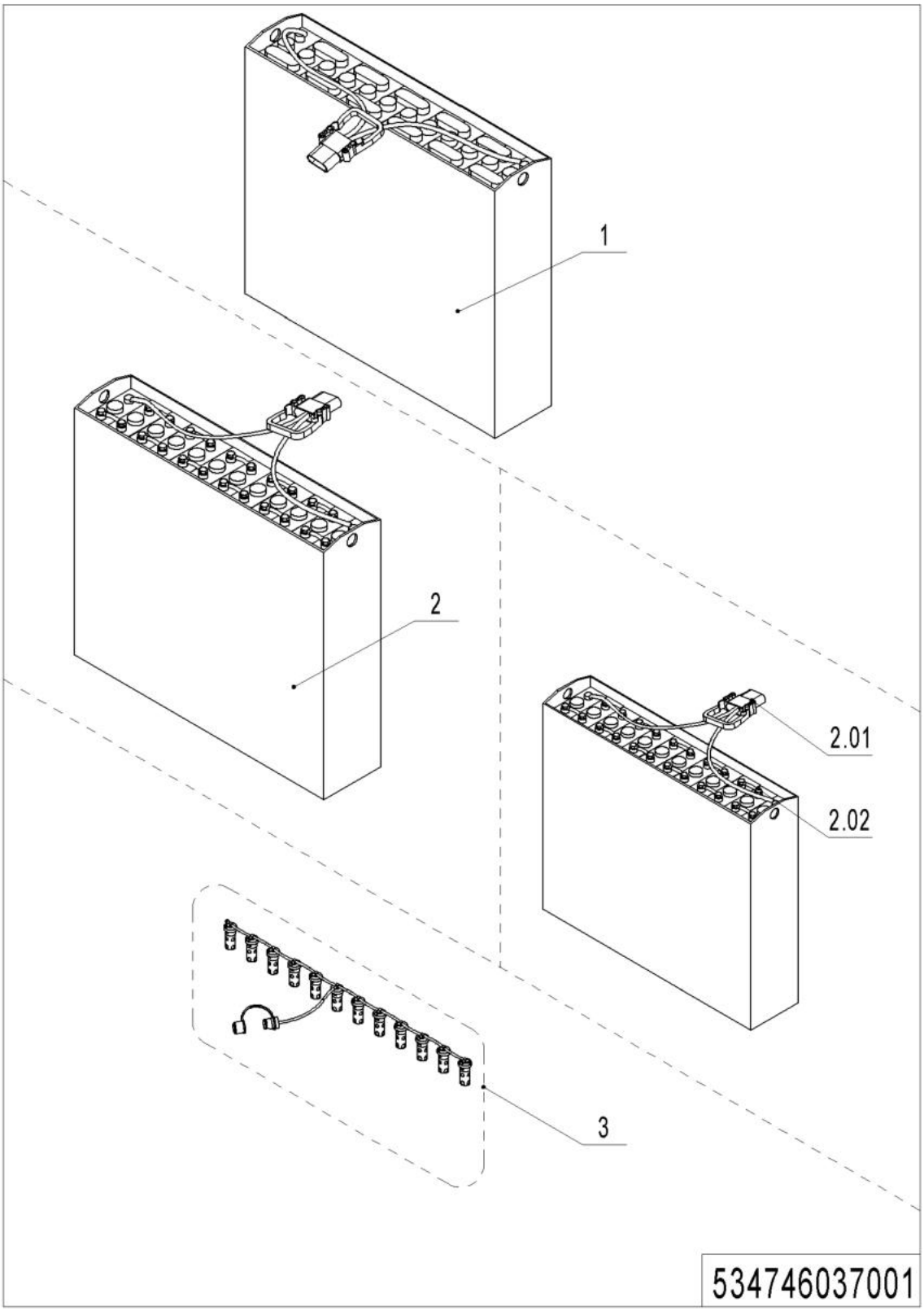

1= Supply as package. 2= Supply with constraints. 3= Phasing-out supply. 4= Supply as assembly. 5= Check other tables.

08 Traction Battery (534746037001)

No.	Item Code	Mark	Item Description	Qty.	Substitute	Note
1	532637010002		电池 24V350Ah(welded)	1		
1	920600100512		电池 24V350Ah(welded)			EN1175:2020
2	532637010003		电池 24V350Ah	1		
2	920600100588		电池 24V350Ah	1		Without liquid
2.01	920400100007		connector	1		Common to all
2.02	505698520000		Plastic sealing bolt	24		Universal bolt
3	535937110000		hydration system	1		Optional, assmbled

09 Traction Battery (Lithium battery) (535946037002)

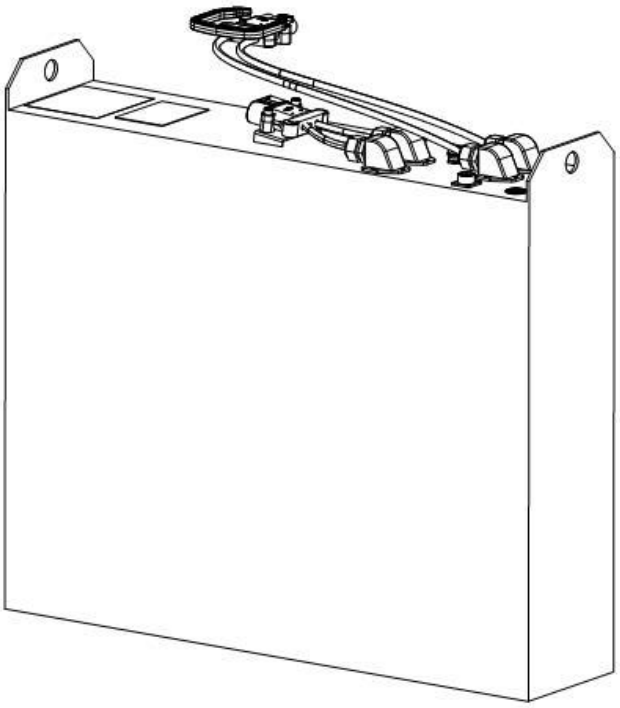

535946037002

1= Supply as package. 2= Supply with constraints. 3= Phasing-out supply. 4= Supply as assembly. 5= Check other tables.

09 Traction Battery (Lithium battery) (535946037002)

No.	Item Code	Mark	Item Description	Qty.	Substitute	Note
1	920600100336		Battery24V200Ah	1		Compatibility EN1175:2020
1	920600100334		Battery24V150Ah	1		Compatibility EN1175:2020
1	920600100387		Battery24V200Ah	1		With counterweight

Chapter 7: Special Parts

01 Load Backrest (532646040501)

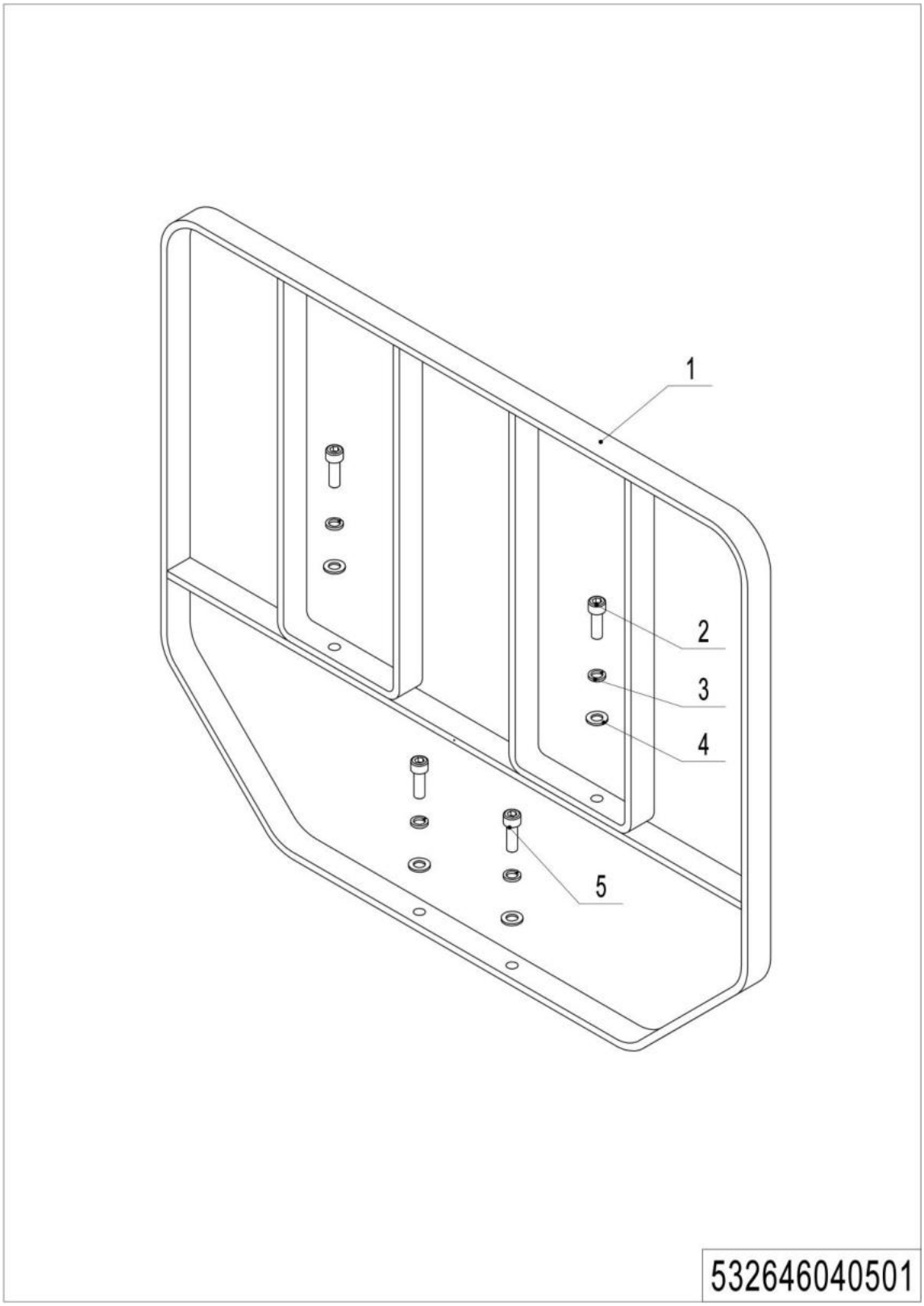

1= Supply as package. 2= Supply with constraints. 3= Phasing-out supply. 4= Supply as assembly. 5= Check other tables.

01 Load Backrest (532646040501)

No.	Item Code	Mark	Item Description	Qty.	Substitute	Note
1	532640510001	2	Load Backrest	1		
2	910200200076	1	Screw	2		
3	910400500007	1	Spring Washer	4		
4	910400100007	1	Flat Washer	4		
5	910200200078	1	Screw	2		

Chapter 8: Others

01 Label and Decal (EU) (535046047001)

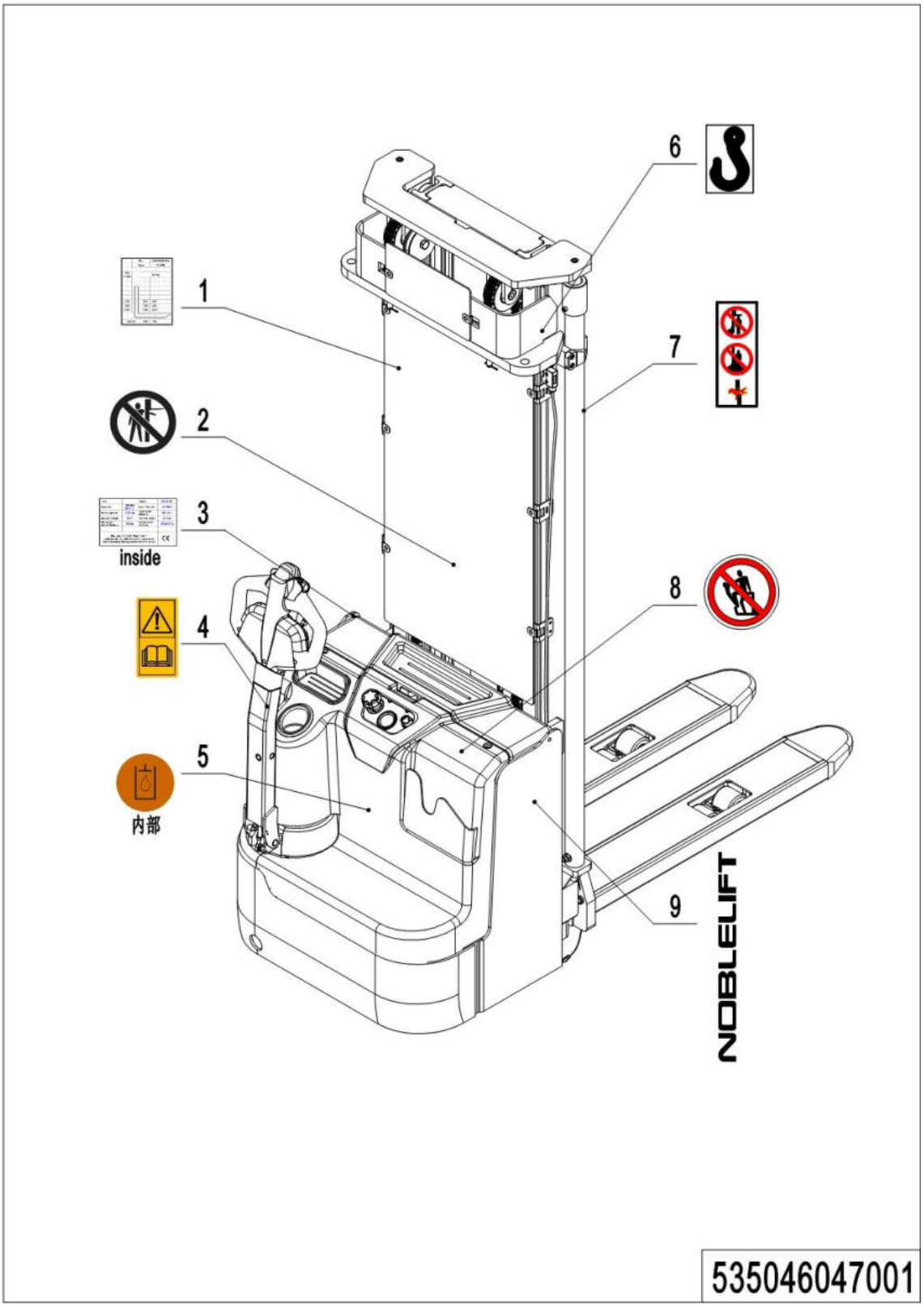

01 Label and Decal (EU) (535046047001)

No.	Item Code	Mark	Item Description	Qty.	Substitute	Note
1	535047520000		Load Capacity Diagram	1		
2	941200100006		Label	1		
3	535047520007		Identification Plat	1		
4	941200300002		Label	1		
5	941200300003		Label	1		
6	941200300001		Label	2		
7	941200100004		Label	2		
8	941200100003		Label	1		
9	941200500001		Label	2		**Special label**

02 Label and Decal (US) (535046047002)

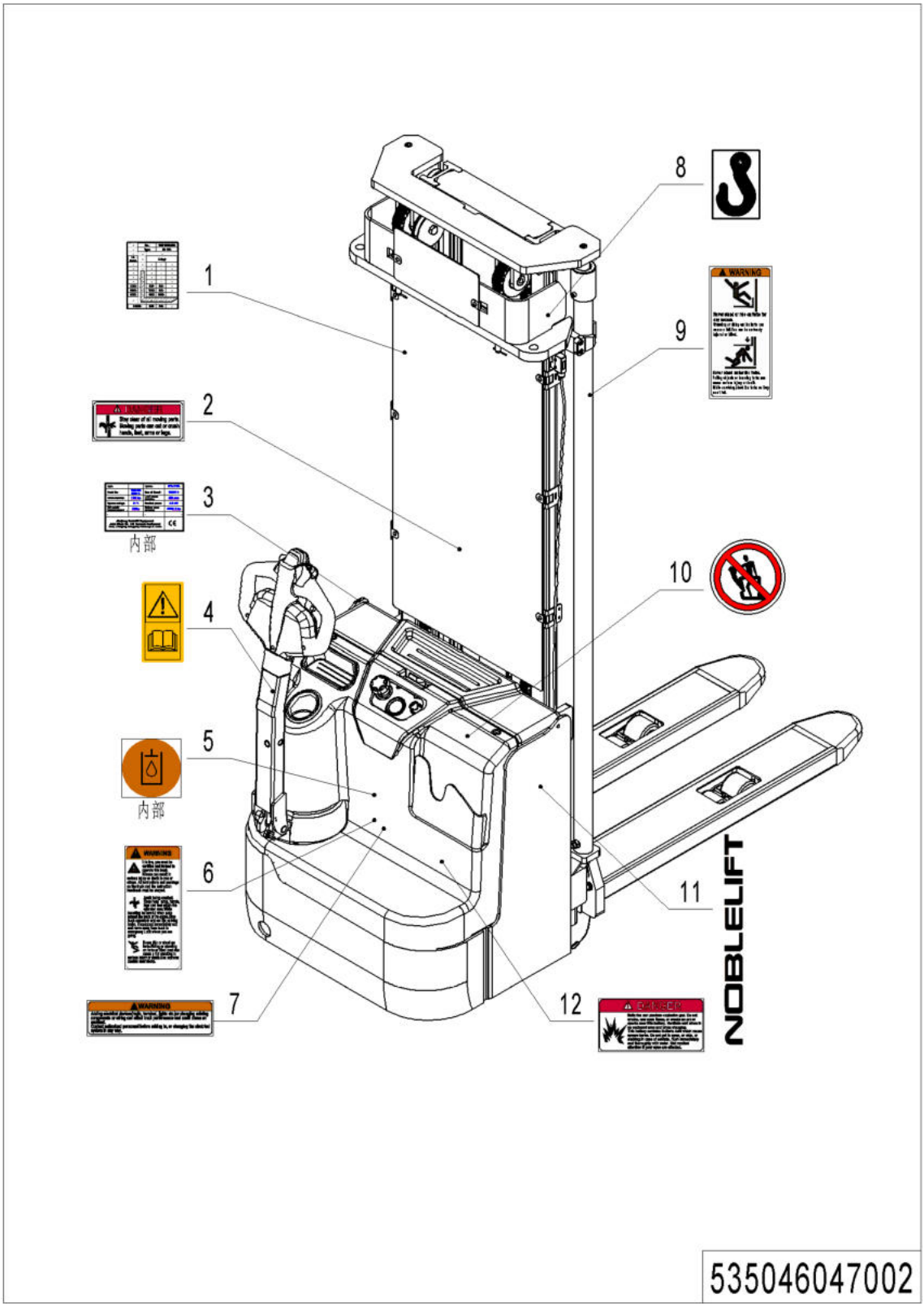

02 Label and Decal (US) (535046047002)

No.	Item Code	Mark	Item Description	Qty.	Substitute	Note
1	535047520000		Load Capacity Diagram	1		
2	941200100014		Label	1		
3	535047520007		Identification Plat	1		
4	941200300002		Label	1		
5	941200300003		Label	1		
6	941200100009		Label	1		
7	941200100010		Label	1		
8	941200300001		Label	2		
9	941200100016		Label	2		
10	941200100011		Label	1		
11	941200500001		Label	2		**Special label**
12	941200100013		Label	1		

Appendix

01 Electrical Circuit Diagram（534746045501）

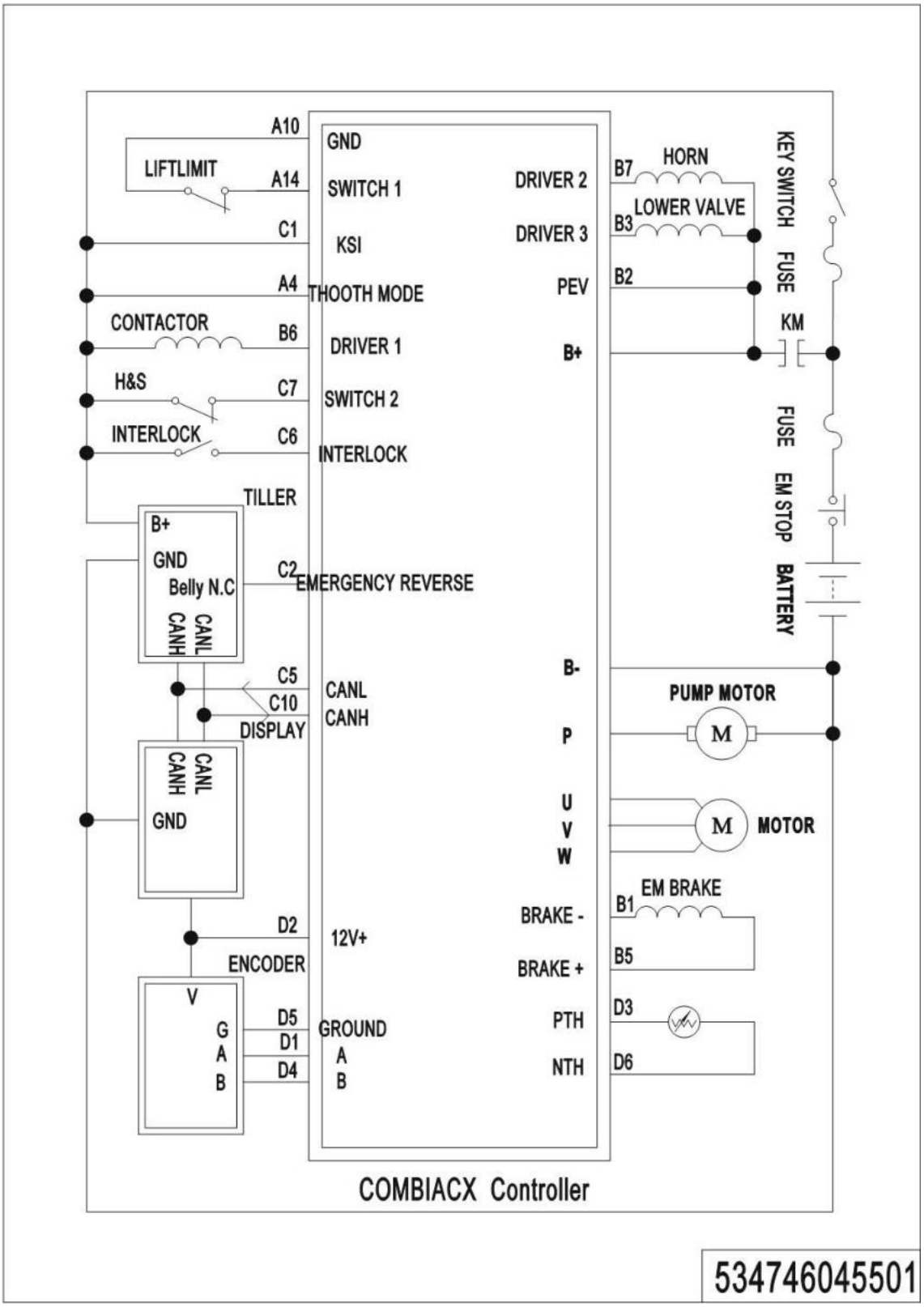

02 Electrical Circuit Diagram (lithium battery)（534746045501）

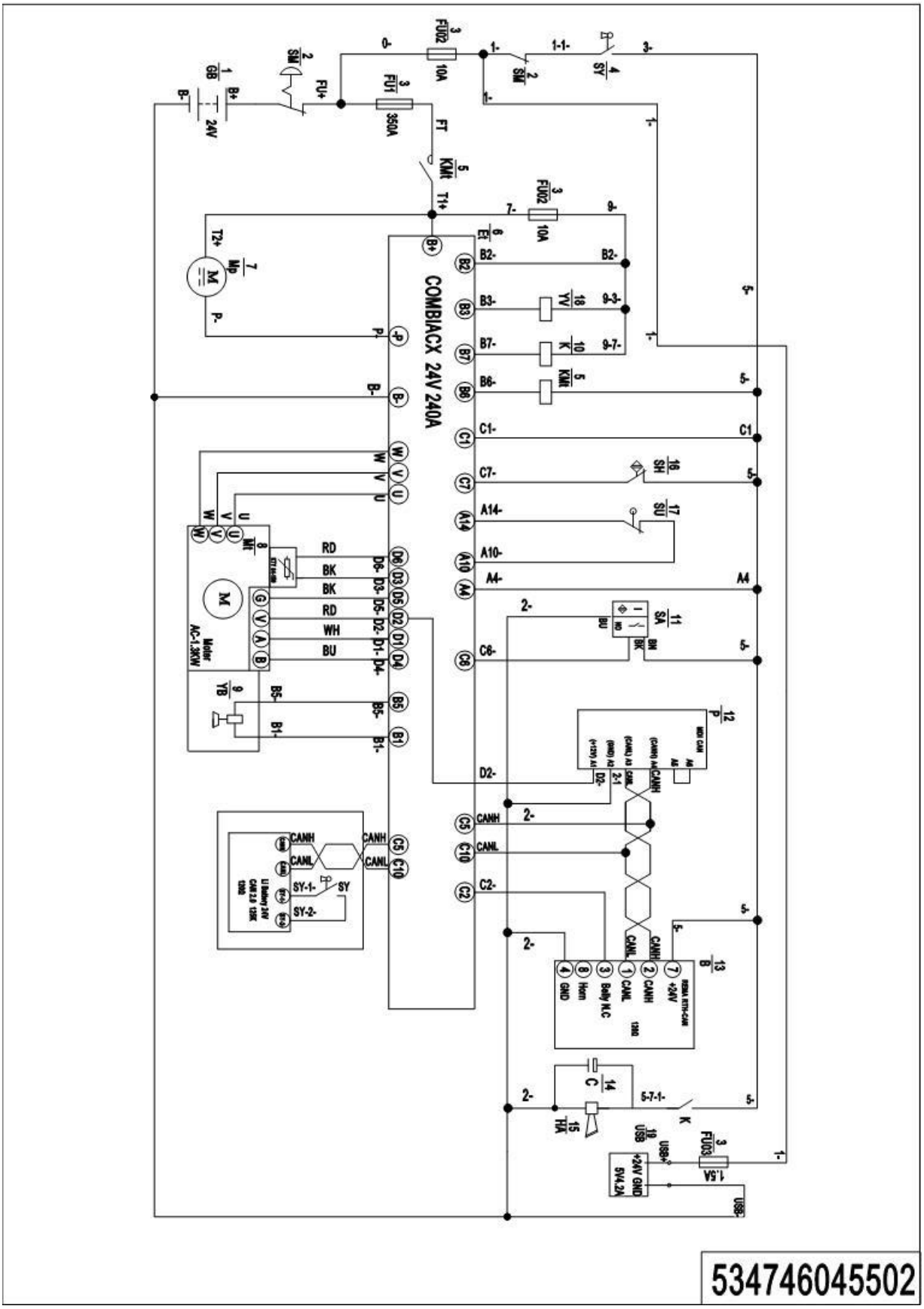

03 Electrical Circuit Diagram(EN1175:2020) (534746045503)

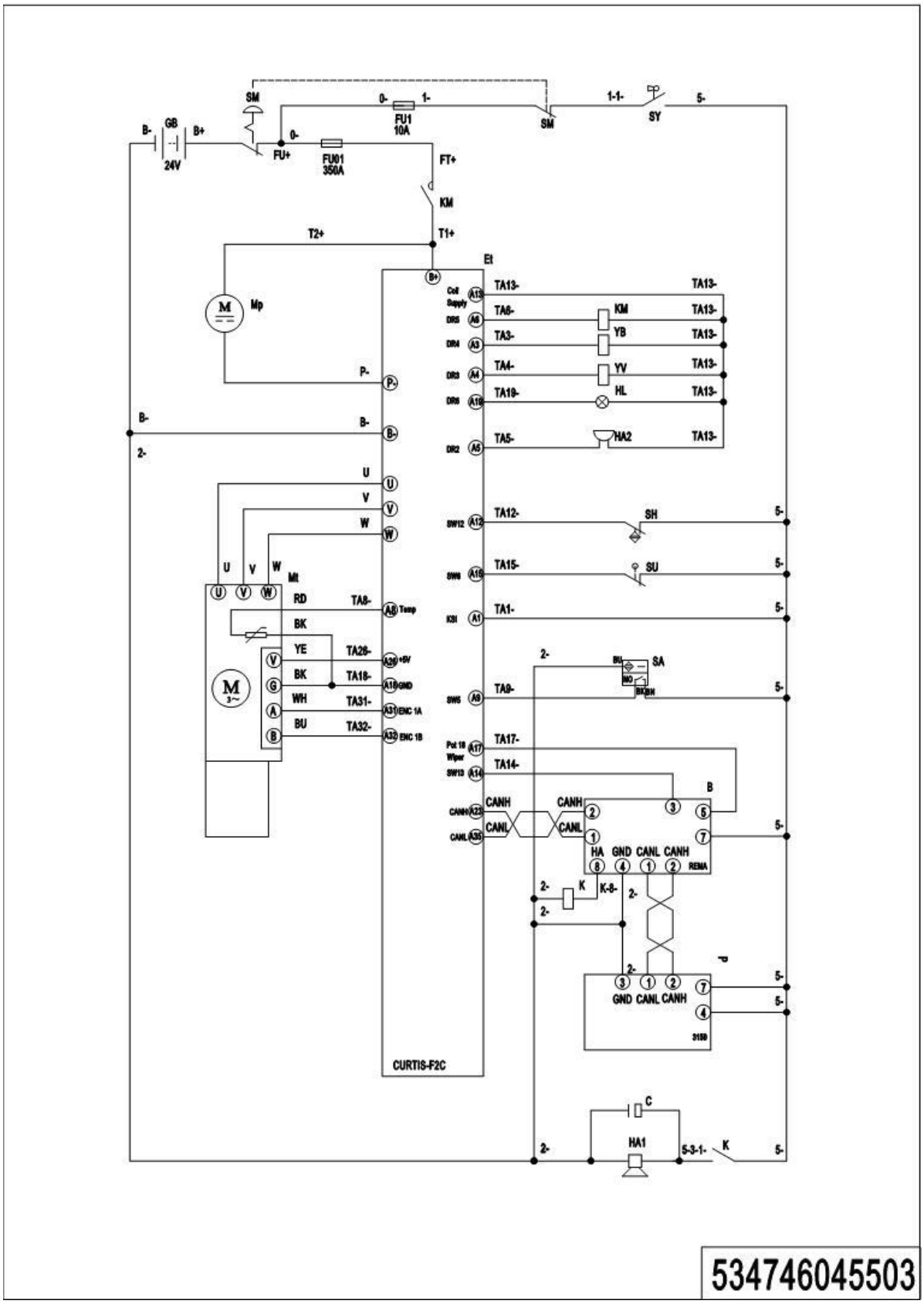

1= Supply as package. 2= Supply with constraints. 3= Phasing-out supply. 4= Supply as assembly. 5= Check other tables.

04 Electrical Circuit Diagram (lithium battery)

(EN1175:2020)(534746045504)

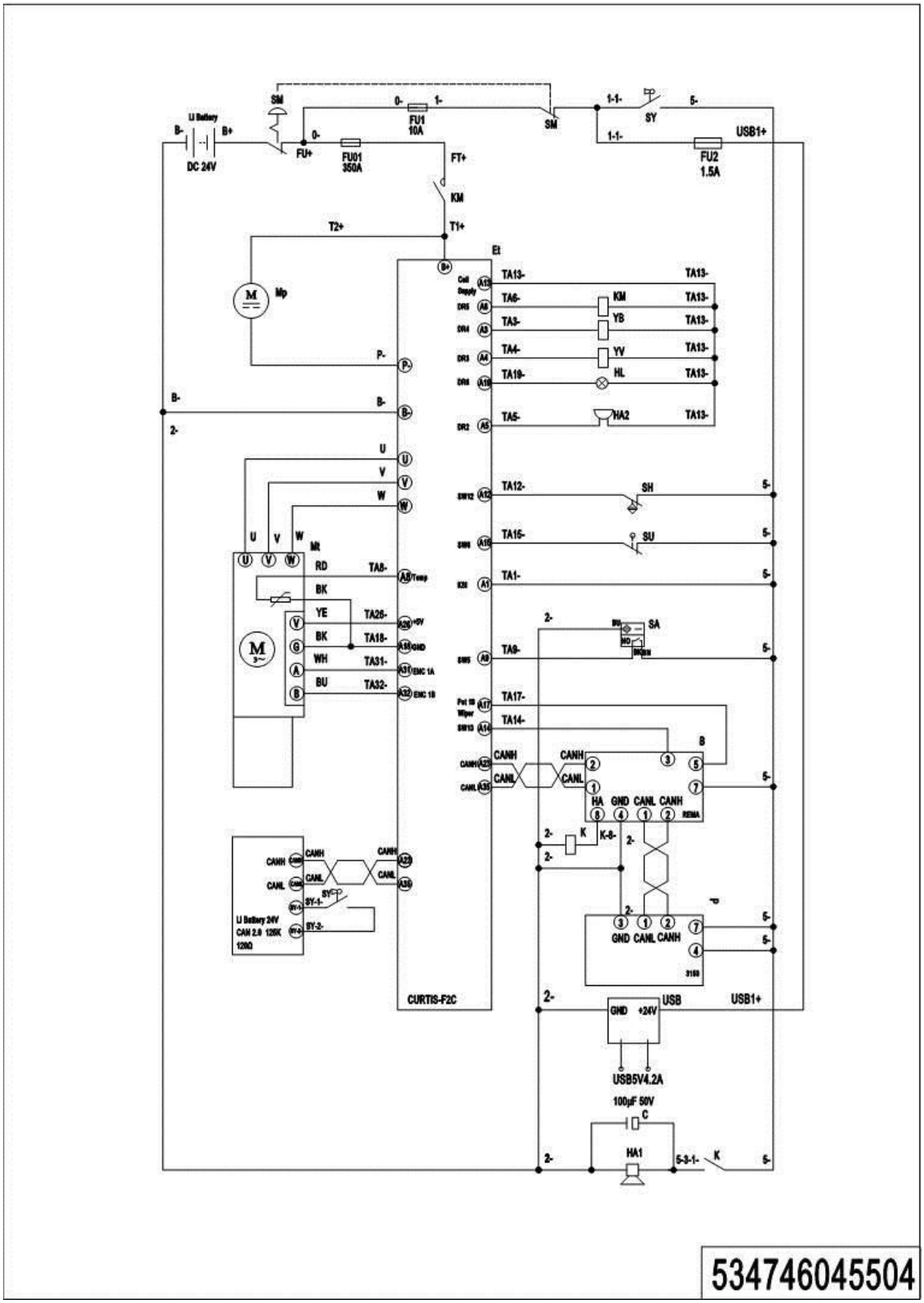

1= Supply as package. 2= Supply with constraints. 3= Phasing-out supply. 4= Supply as assembly. 5= Check other tables.

05 Hydraulic Circuit Diagram (534746045502)

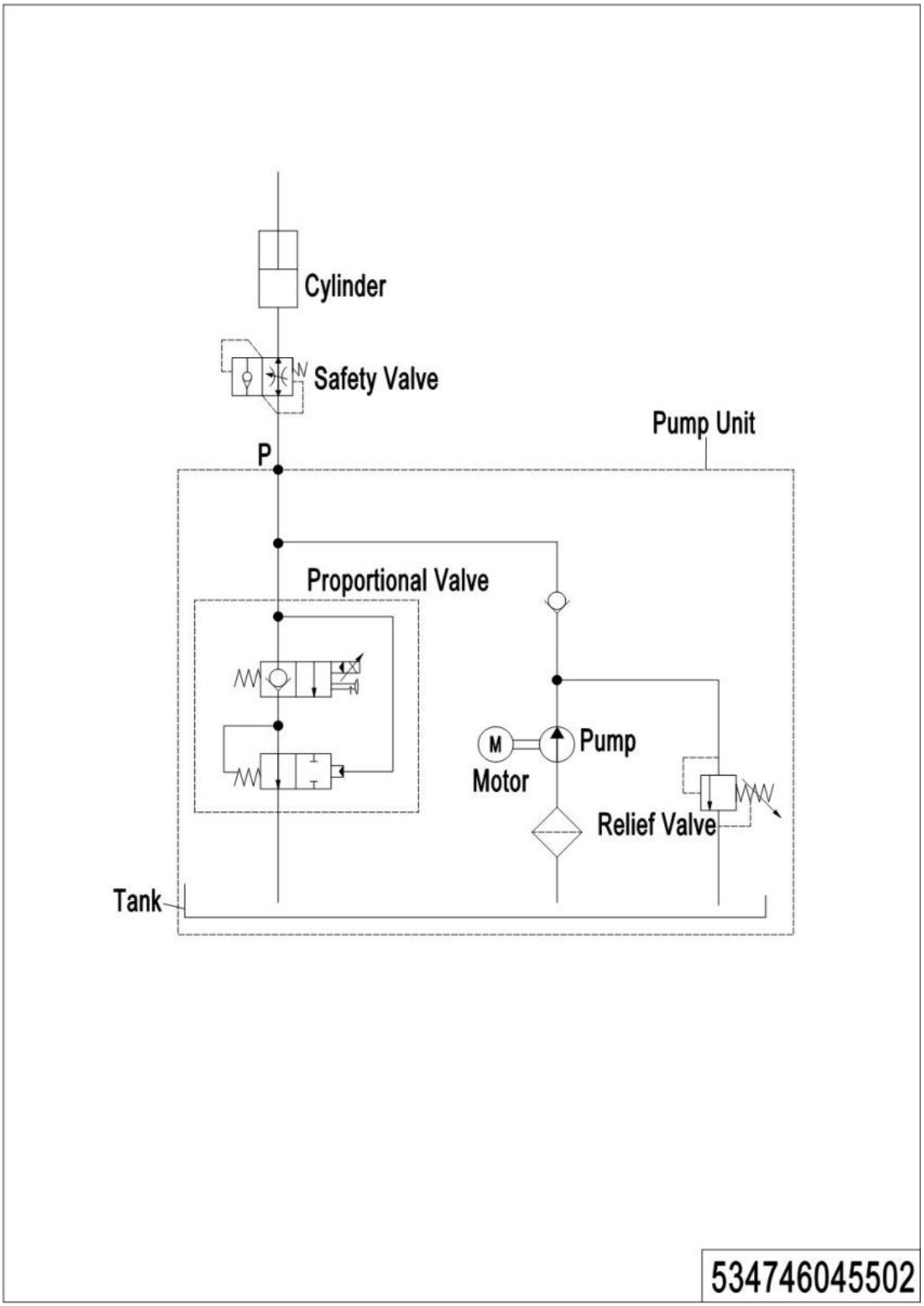

06Consumable Parts List

No.	Item Code	Item Description	Qty.	Chapter/ Section/ Number
1	940500200005	Bushing	2	Chapter 1/01/8
2	940300400005	WheelΦ230x70	1	Chapter 1/02/6
3	534798520026	Carbon Brush	1	Chapter 2/02/2
4	940500200008	Bushing	2	Chapter 3/02/28
5	910700200017	Bearing	12	Chapter 3/02/35.02
6	940200300022	Compound Roller	4	Chapter 3/03/1 Chapter 04/44
7	535098510003	Seal Kit	2	Chapter 4/01/7.01
8	535933510005	Switch	2	Chapter 4/01/25Chapter 4/02/30Chapter 4/03/32
8	535933510005	Switch		Chapter 4/04/42
9	940200300020	Compound Roller	16	Chapter 4/01/37Chapter 4/02/35Chapter 4/03/44
10	535098510002	Seal Kit	2	Chapter 4/02/12.01
11	534798510003	Seal Kit	1	Chapter 4/02/46.01
12	535098510001	Seal Kit	2	Chapter 4/03/17.01
13	535098510000	Seal Kit	2	Chapter 4/04/16.01
14	534798510001	Seal Kit	1	Chapter 4/04/57.01
15	940400100011	Air Spring	1	Chapter 5/01/9
16	505633510002	Proximity Switch	1	Chapter 5/01/13
17	940300300009	WheelΦ84x70	4	Chapter 5/03/1.01
18	910700200019	Bearing	10	Chapter /04/25 Chapter /04/1. 02 Chapter /05/4. 08
19	910700400004	Bearing	2	Chapter 5/05/4.03
20	940300300020	WheelΦ150x54	1	Chapter 5/05/4.07
21	505698520029	Button	1	Chapter 6/01/1.02 Chapter 6/02/1.02
22	920100300001	Fuse	1	Chapter 6/04/9
23	920100100013	Fuse	1	Chapter 6/03/12 Chapter 6/05/7
24	920100200002	Fuse	1	Chapter 6/03/15 Chapter 6/05/17