Print Number: Print Date:

NOBLELIFT

Scan QR Code for More

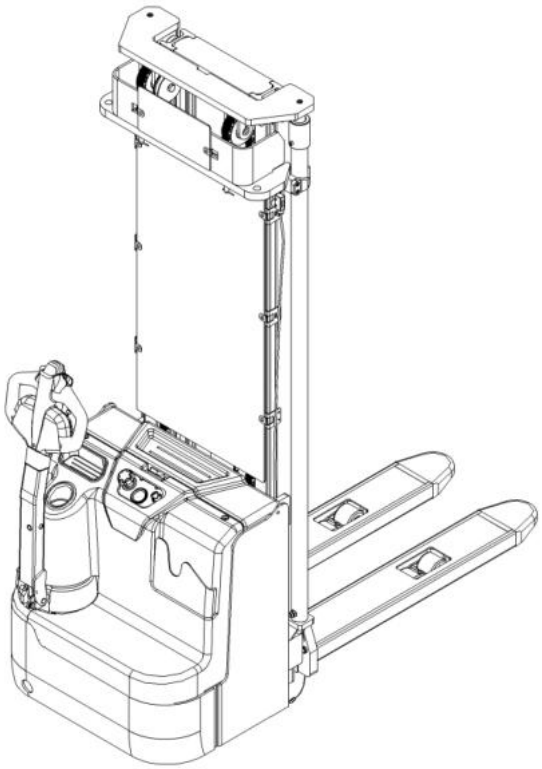

Electric Pallet Stacker PS12L

PARTS MANUAL

534446020101

Version V03

Truck Identification Number From:

Parts Manual

PS12L-PM03EN

Please order parts from authorized dealers of Noblelift Intelligent Equipment Co., LTD.

In order to avoid wrong delivery, all the orders for spare parts should specify the following items:

- Truck model, identification number and manufacture year.
- Orders for spare parts of mast, hydraulic transmission unit, steering axle, motor, etc. shall indicate the manufacture number of these parts.
- Codes for Noblelift spare parts are shown in the table of parts manual. Please also pay attention to the description of supply status, order quantity, etc. (check the number listed in "Mark" column of the parts manual).

"Mark" Column:

The unmarked indicates the parts are in short supply cycle.

Number 1: supply as package. Indicating these that parts are small parts and seal parts, which are supplied in package unit and in short supply cycle.

Number 2: supply with constraints. Indicating that these spare parts are not in stock and will be prepared for production after receiving the order from customers, which are in long supply cycle.

Number 3: phasing-out supply. Indicating that these parts will be replaced by new parts due to technical improvements and the current stock will not be available when these parts run out. Please check the description of technical improvements notice.

Number 4: supply as assembly. Indicating that these parts are assembly parts defined by manufacture process, which cannot be supplied as a single part.

Number 5: check other tables.

This parts manual is the property of Noblelift and can be shared under the confidential agreement only, Noblelift has the right to claim for compensation of any unauthorized use. Copy without permission is not allowed. Figures in the manual are not limited by the original design. Noblelift Intelligent Equipment Co., LTD reserves the right to improve the products for continuous technology progress.

Table of Contents

Chapter 1: Drive System 1

01 Drive Unit (534746013501) 1

02 Drive Unit 1.3KW (534746013502) 3

Chapter 2: Hydraulic System 5

01 Hydraulic Pipeline (Two-stage mast) (534446024002) 5

02 Hydraulic Pipeline (Triple mast full free lift) (534446024001) 7

03 Pump Unit (HPI,1.5KW) (534446023501) 9

04 Pump Unit (HPI,3.2KW) (534746023501) 11

05 Pump Unit (VIBO,3.2KW) (534746023502) 13

Chapter 3: Truck Frame 15

01 Chassis (534446021501) 15

02 Fork Carriage (534446038001) 17

Chapter 4: Mast System 19

01 Two-stage mast standard lift (534446044001) 19

01 Two-stage mast standard lift (534446044001) Continuation 21

02 Two-stage mast full free lift (534446043501) 23

02 Two-stage mast full free lift (534446043501) Continuation 1 25

02 Two-stage mast full free lift (534446043501) Continuation 2 27

03 Triple Mast Full Free Lift (534446044501) 29

03 Triple Mast Full Free Lift (534446044501) Continuation 1 31

03 Triple Mast Full Free Lift (534446044501) Continuation 2 33

Chapter 5: Steering System, Braking System, Wheels 35

01 Tiller Unit (504446011001) 35

02 Control Handle （535946011002） 37

02 Control Handle(EN1175:2020) (566546010002) 39

03 Load Wheel (532946017001) 41

04 Caster (534746016501) 43

Chapter 6: Electrical Parts 45

01 Display Assembly （534746010001）.....45

02 Display Assembly(EN1175:2020) (534746010001).....47

03 Electronic Components (534446033001).....49

04 Electronic Components(EN1175:2020) (534746033002).....51

05 Electric control assembly (534746033003) (EN1175:2020).....53

06 Charger (534446036501).....55

07 Charger (lithium battery) (534446036502).....57

08 Traction Battery (534446037001).....59

09 Traction Battery (lithium battery) (534446037002).....61

Chapter 7: Special Parts.....63

01 Load Backrest (532646040501).....63

Chapter 8: Others.....65

01 Label and Decal (EU) (534446047001).....65

02 Label and Decal (US) (534446047002).....67

Appendix.....69

01 Electrical Circuit Diagram (534746045501).....69

02 Electrical Circuit Diagram (lithium battery) (534746045501).....70

03 Electrical Circuit Diagram(EN1175:2020) (534746045503).....71

04 Electrical Circuit Diagram (lithium battery).....72

(EN1175:2020)(534746045504).....72

05 Hydraulic Circuit Diagram (534446045502).....73

06 Consumable Parts List.....74

Chapter 1: Drive System

01 Drive Unit (534746013501)

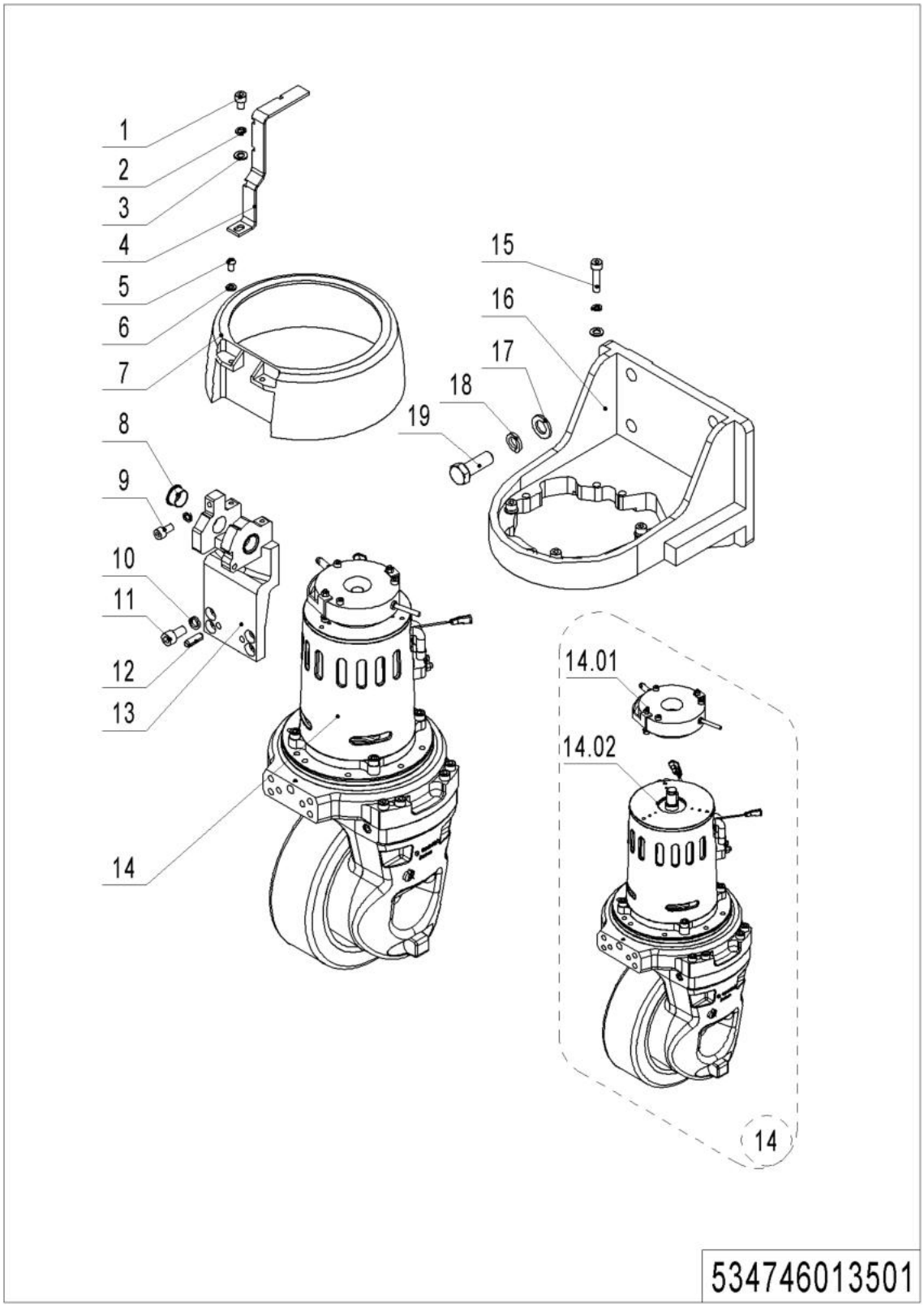

01 Drive Unit (534746013501)

No.	Item Code	Mark	Item Description	Qty.	Substitute	Note
1	910200200053	1	Screw	1		
2	910400500006	1	Spring Washer	5		
3	910400100006	1	Flat Washer	5		
4	534713520002		Fixing Mount	1		
5	910200300017	1	Screw	2		
6	910400100005	1	Flat Washer	2		
7	534713520003		Protective Cover	1		
8	940500200005		Bushing	2		
9	910200200055	1	Screw	1		
10	910400500007	1	Spring Washer	4		
11	910200200075	1	Screw	4		
12	910600400044	1	Spring Pin	2		
13	534713520001		Bracket	1		
14	534798510010		Drive Unit Assembly	1		
14.01	940700100001		Brake	1		
14.02	940900400002	5	Drive Unit	1		**See 534746013502**
15	910200200060	1	Screw	4		
16	534713520000		Wheel Mount	1		
17	910400100010	1	Flat Washer	4		
18	910400500010	1	Spring Washer	4		
19	910100300071	1	Bolt	4		

1= Supply as package. 2= Supply with constraints. 3= Phasing-out supply. 4= Supply as assembly. 5= Check other tables.

02 Drive Unit 1.3KW (534746013502)

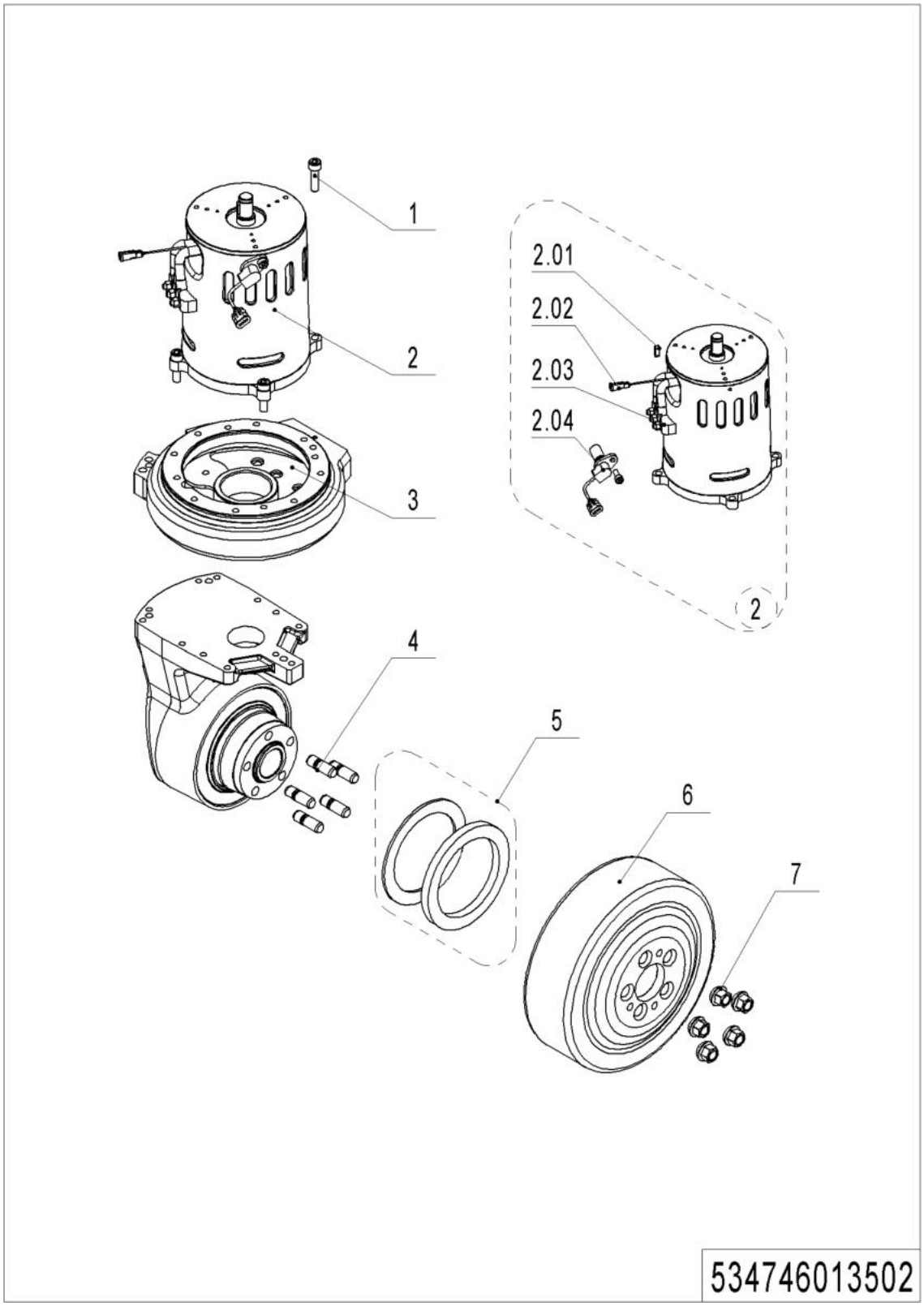

1= Supply as package. 2= Supply with constraints. 3= Phasing-out supply. 4= Supply as assembly. 5= Check other tables.

02 Drive Unit 1.3KW(534746013502)

No.	Item Code	Mark	Item Description	Qty.	Substitute	Note
1	504498520016	1	Screw	4		
2	504498510005	2	Motor	1		
2.01	504498520011	2	Feather Key	1		
2.02	504498520012	2	Sensor	1		
2.03	504498520013	2	Wiring Board	1		
2.04	504498520010	2	Sensor	1		
3	504498510002	2	Rotary Table Kit	1		
4	504498520005	2	Bolt	5		
5	504498510003	2	Seal Kit	1		
6	940300400005		WheelΦ230x70	1		
7	504498520003	1	Nut	5		

Chapter 2: Hydraulic System

01 Hydraulic Pipeline (Two-stage mast) (534446024002)

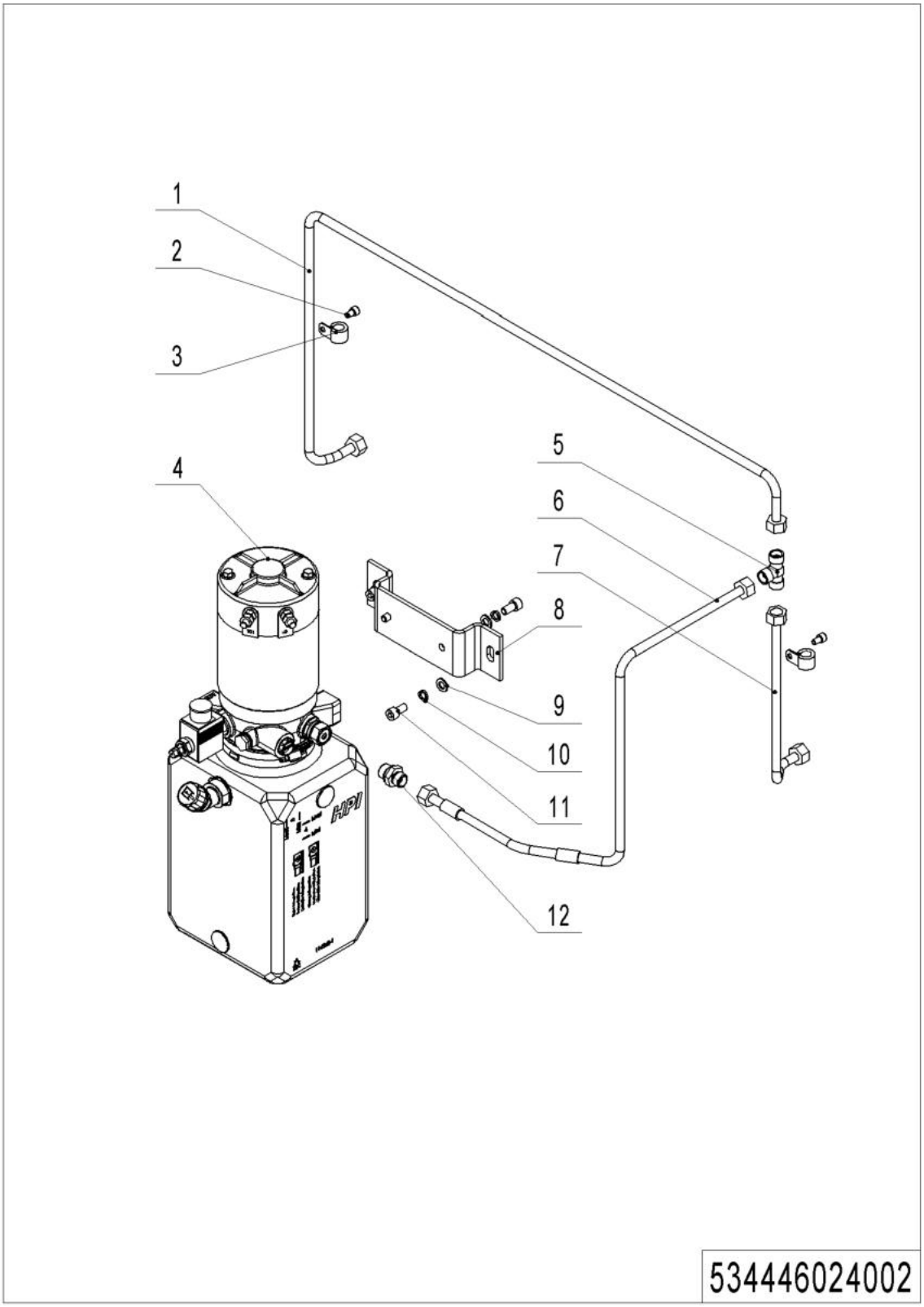

1= Supply as package. 2= Supply with constraints. 3= Phasing-out supply. 4= Supply as assembly. 5= Check other tables.

01 Hydraulic Pipeline (Two-stage mast) (534446024002)

No.	Item Code	Mark	Item Description	Qty.	Substitute	Note
1	534724010008		Steel Tube	1		
2	910200200032	1	Screw	2		
3	951000100001		Hose Clamp	2		
4	950900100014	5	Pump Unit	1		**See 534446023501**
5	950400700002		Joint	1		
6	534424010001		Hose	1		
7	534724010007		Steel Tube	1		
8	534424020000		Mounting Plate	1		
9	910400100006	1	Flat Washer	4		
10	910400500006	1	Spring Washer	4		
11	910200200055	1	Screw	4		
12	950400300007		Joint	1		

02 Hydraulic Pipeline (Triple mast full free lift) (534446024001)

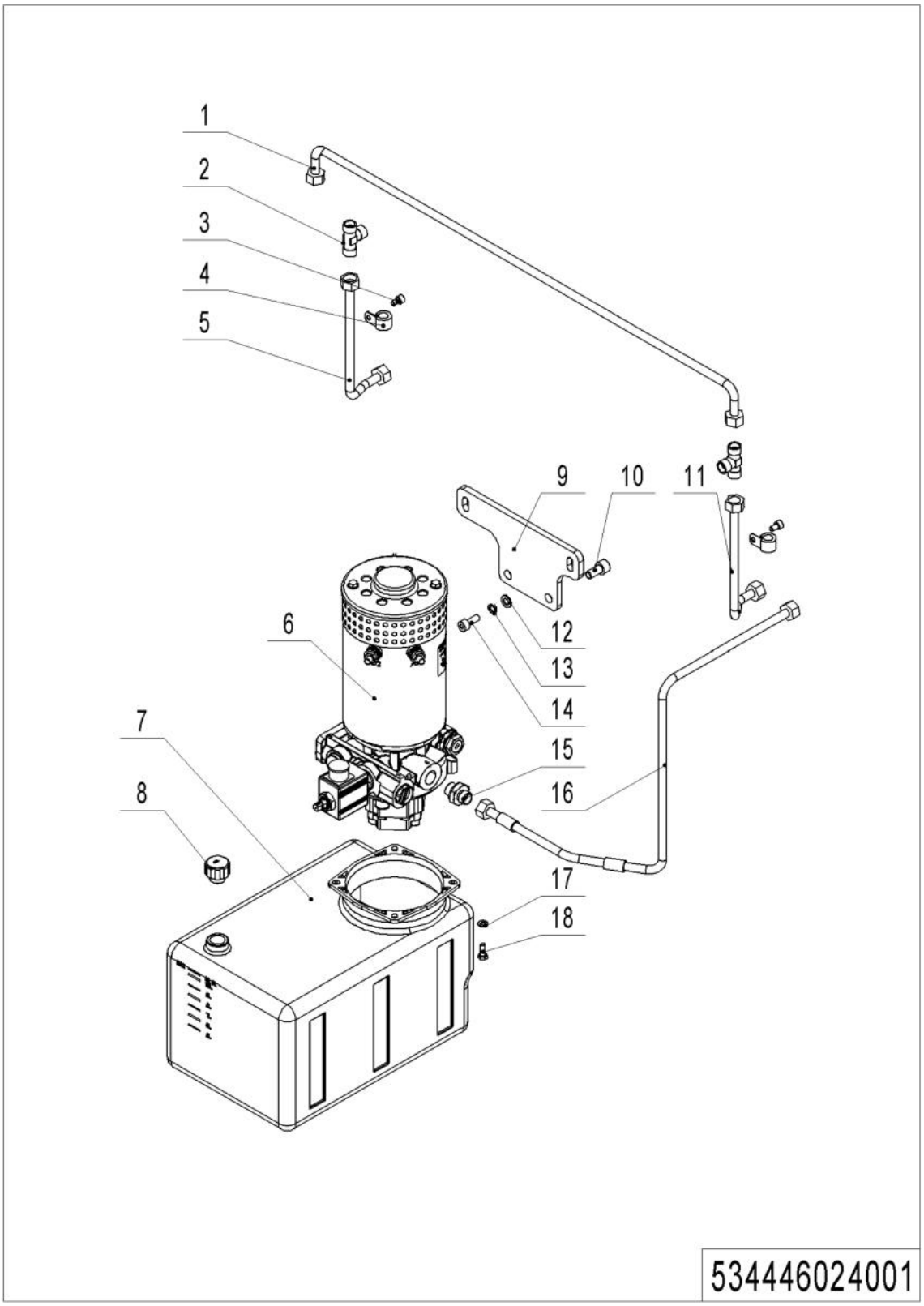

02 Hydraulic Pipeline (Triple mast full free lift) (534446024001)

No.	Item Code	Mark	Item Description	Qty.	Substitute	Note
1	534724010000		Steel Tube	1		
2	950400700002		Joint	2		
3	910200200032	1	Screw	2		
4	951000100001		Hose Clamp	2		
5	534724010005		Steel Tube	1		
6	950900100015	5	Pump Unit	1		**See 534746023501**
6	950900100098	5	Pump Unit	1		**See 534746023502**
7	534719020002		Tank	1		
8	951100200004		Screw Plug	1		
9	534719020001		Mounting Plate	1		
10	910200200075	1	Screw	2		
11	534724010006		Steel Tube	1		
12	910400100006	1	Flat Washer	2		
13	910400500006	1	Spring Washer	2		
14	910200200057	1	Screw	2		
15	950400300005		Joint	1		
16	534424010001		Hose	1		
17	910400100005	1	Flat Washer	4		
18	910100300010	1	Bolt	4		

1= Supply as package. 2= Supply with constraints. 3= Phasing-out supply. 4= Supply as assembly. 5= Check other tables.

03 Pump Unit (HPI,1.5KW) (534446023501)

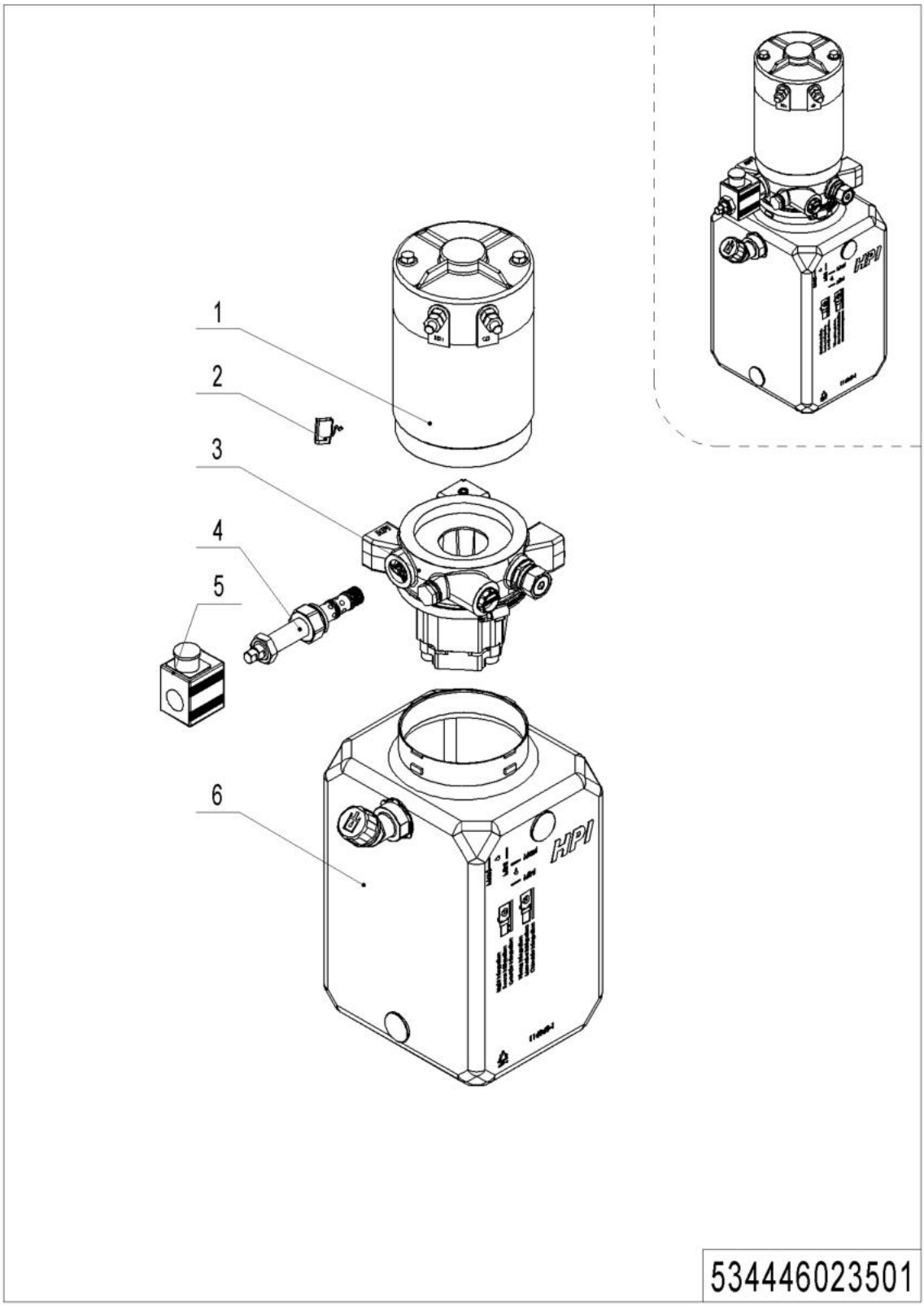

1= Supply as package. 2= Supply with constraints. 3= Phasing-out supply. 4= Supply as assembly. 5= Check other tables.

03 Pump Unit (HPI,1.5KW) (534446023501)

No.	Item Code	Mark	Item Description	Qty.	Substitute	Note
--	950900100014		Pump Unit	1		**HPI,1.5KW**
1	534498510003	2	Motor	1		
2	534498510008	2	Carbon Brush	1		
3	534498510004	2	Valve Block	1		
4	534498510005	2	Magnetic Valve	1		**Provide with coil**
5	534498510006	2	Coil	1		**Provide with valve**
6	534498510007	2	Tank	1		

04 Pump Unit (HPI,3.2KW) (534746023501)

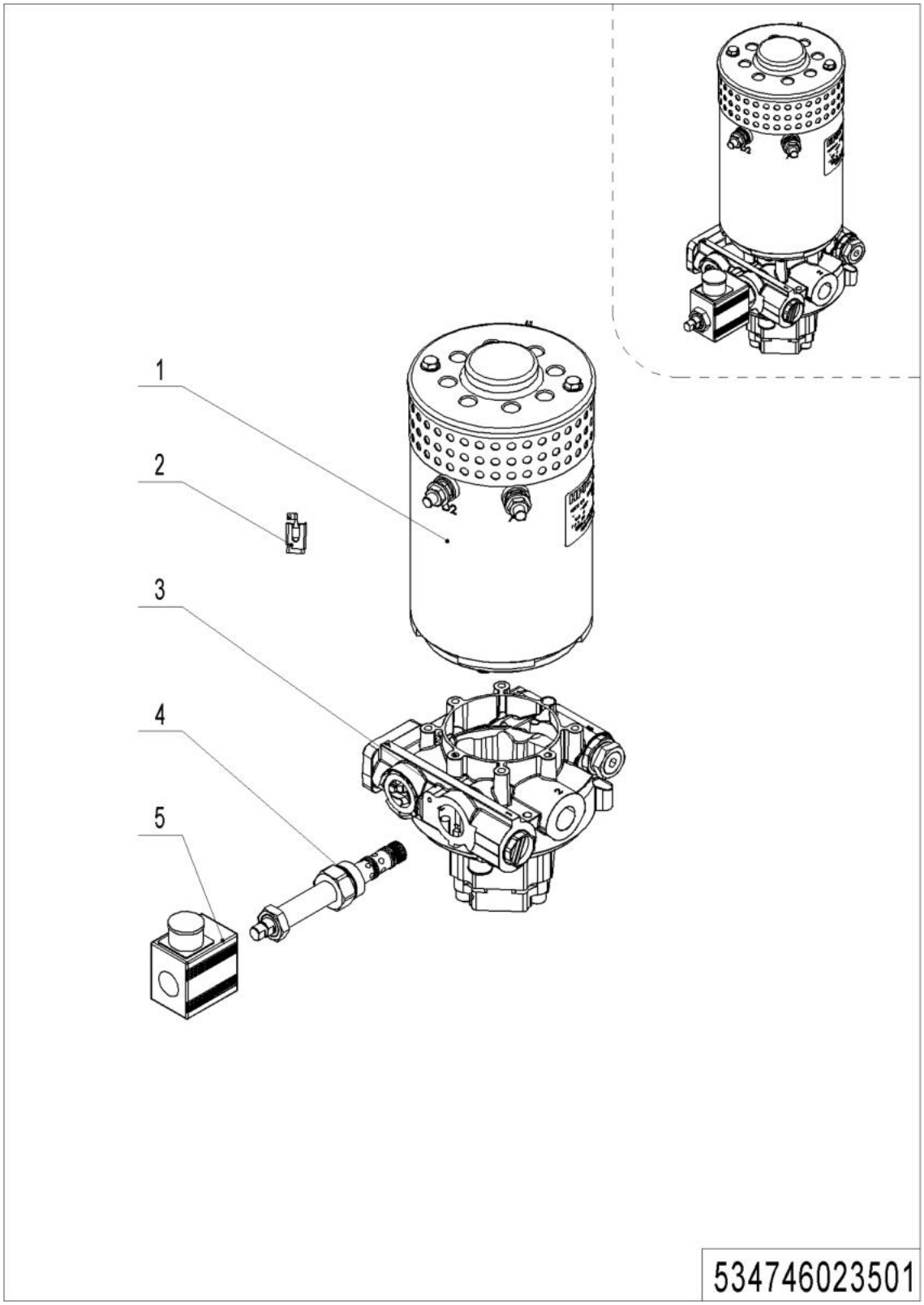

1= Supply as package. 2= Supply with constraints. 3= Phasing-out supply. 4= Supply as assembly. 5= Check other tables.

04 Pump Unit (HPI,3.2KW) (534746023501)

No.	Item Code	Mark	Item Description	Qty.	Substitute	Note
--	950900100015		Pump Unit	1		**HPI,3.2KW**
1	534798510006	2	Motor	1		
2	534798520026	2	Carbon Brush	1		
3	534798510007	2	Valve Block	1		
4	534798520024	2	Magnetic Valve	1		**Provide with coil**
5	534798520025	2	Coil	1		**Provide with valve**

05 Pump Unit (VIBO,3.2KW) (534746023502)

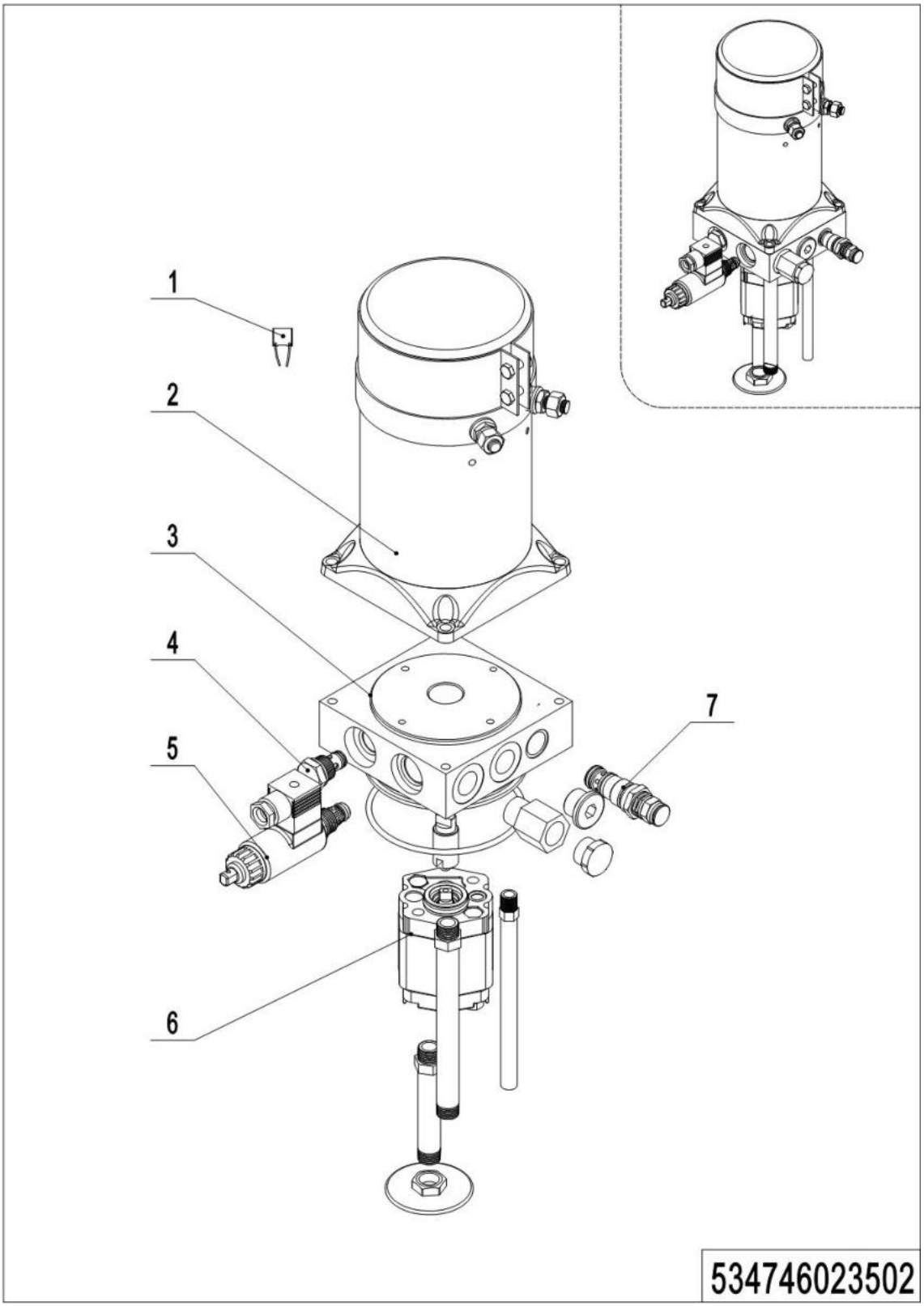

1= Supply as package. 2= Supply with constraints. 3= Phasing-out supply. 4= Supply as assembly. 5= Check other tables.

05 Pump Unit (VIBO,3.2KW) (534746023502)

No.	Item Code	Mark	Item Description	Qty.	Substitute	Note
--	950900100098		Pump Unit	1		**VIBO,3.2KW**
1	535998510013	2	Carbon Brush	1		
2	534798510012	2	Motor	1		
3	534798510013	2	Valve	1		
4	532098510003	2	Check Valve	1		
5	534798510014	2	Magnetic Valve	1		
6	534798510015	2	Gear Pump	1		
7	402698520018	2	Overflow Valve	1		

Chapter 3: Truck Frame

01 Chassis (534446021501)

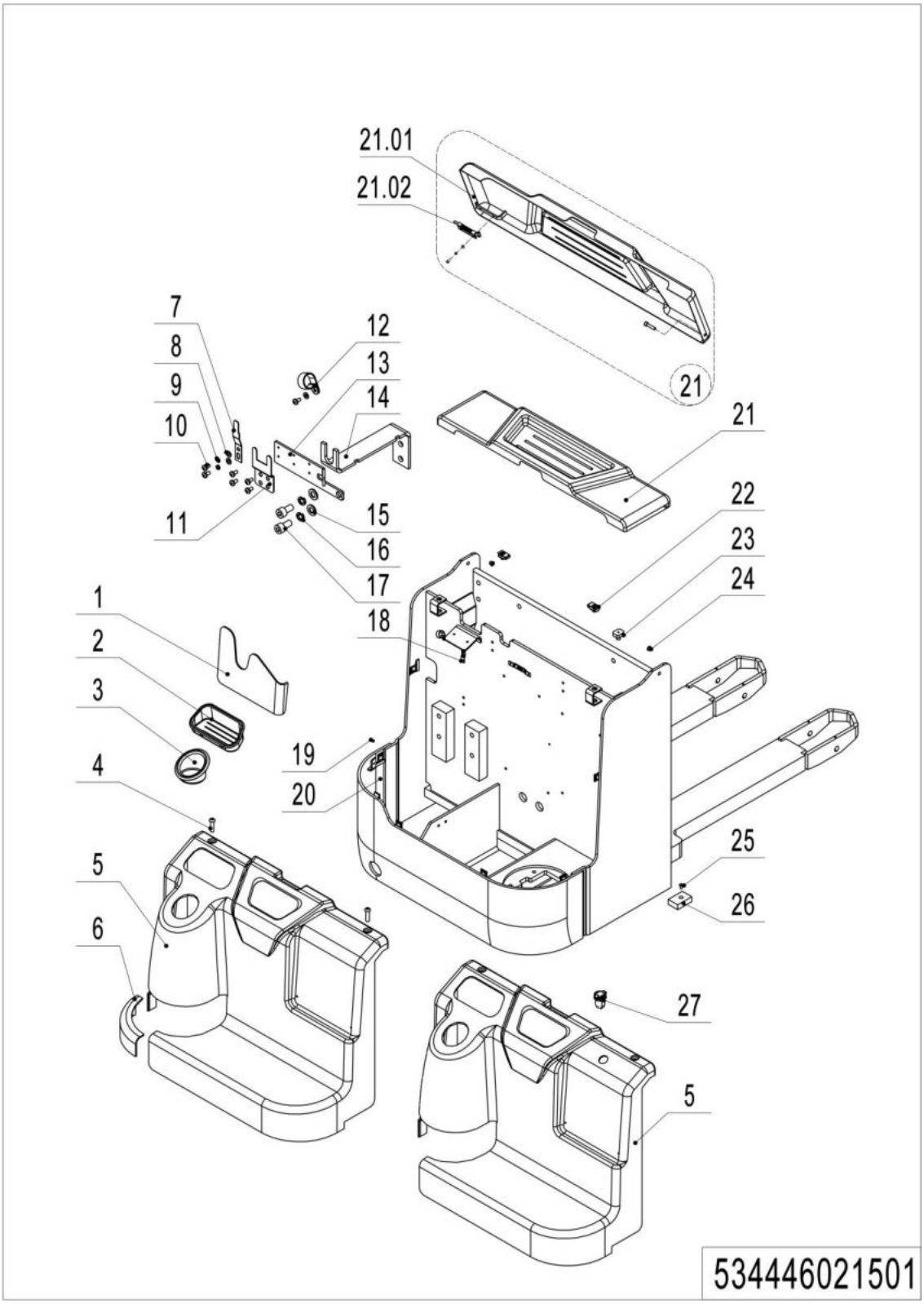

01 Chassis (534446021501)

No.	Item Code	Mark	Item Description	Qty.	Substitute	Note
1	534721520022		File Box	1		
2	534721520021		Container	1		
3	534721520020		Cup Holder	1		
4	941100100002	1	Screw	2		
5	534721520018		Protective Cover	1		
5	535021520022		Protective Cover	1		**Only for lithium battery**
6	534721520019		Protective Cover	1		
7	921300300010		Connector Holder	1		
8	910400100003	1	Flat Washer	5		
9	910400500003	1	Spring Washer	4		
10	910200500034	1	Screw	9		
11	921300300015		Holder	1		
12	921300200004		Cable Clamp	1		
13	921300300012		Holder	1		
14	534721520025		Fixing Mount	1		
15	910400100006	1	Flat Washer	2		
16	910400500006	1	Spring Washer	2		
17	910200200055	1	Screw	2		
18	921300300005		Holder	3		
19	910200800011	1	Screw	2		
20	534421510000	2	Chassis(570x1150)	1		
20	534421510001	2	Chassis(685x1150)	1		
21	534421010001		Cell Cover Assembly	1		
21.01	534421010000		Cell Cover	1		
21.02	940800900001		Lock Pin	1		
22	940400400003		Cage Nut	2		
23	505938520016		Crash Pad	1		
24	534721520023		Sleeve	2		
25	910200300017	1	Screw	2		
26	534721520024		Crash Pad	2		
27	921900100006		USB interface	1		Only for lithium battery

02 Fork Carriage (534446038001)

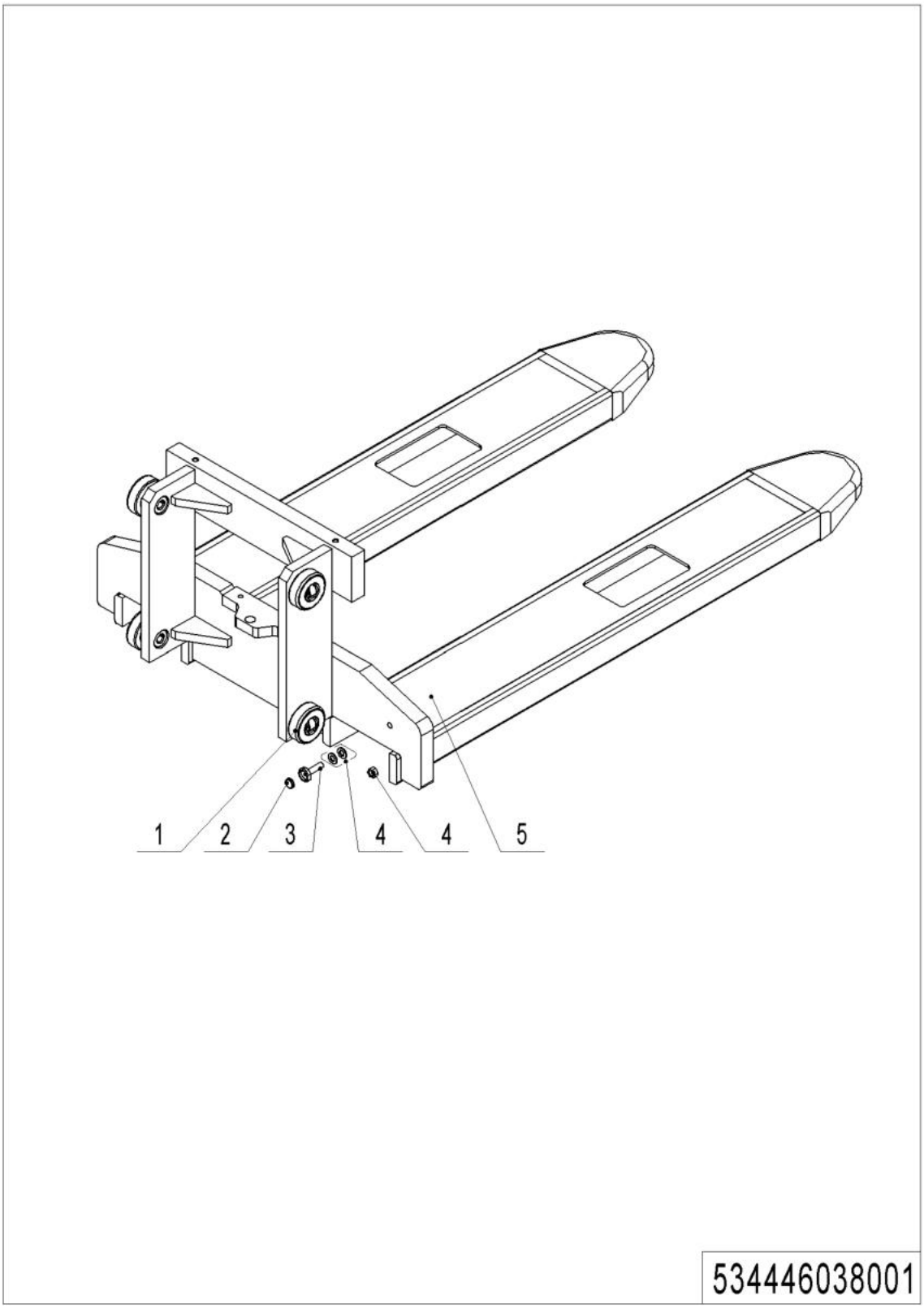

1= Supply as package. 2= Supply with constraints. 3= Phasing-out supply. 4= Supply as assembly. 5= Check other tables.

03 Fork Carriage (534446038001)

No.	Item Code	Mark	Item Description	Qty.	Substitute	Note
1	940200300002		Compound Roller	4		
2	940600100001		Magnetic Steel	1		
3	940600200001		Mounting Base	1		
4	910400100007	1	Flat Washer	2		
4	910300100007	1	Nut	1		
5	534438010000	2	Fork(570x1150)	1		**DX**
5	534438010001	2	Fork(685x1150)	1		**DX**
5	534438010002	2	Fork(570x1150)	1		**DX+FFL**
5	534438010003	2	Fork(685x1150)	1		**DX+FFL**
5	534438010004	2	Fork(570x1150)	1		**TX+FFL**
5	534438010005	2	Fork(685x1150)	1		**TX+FFL**

Chapter 4: Mast System

01 Two-stage mast standard lift (534446044001)

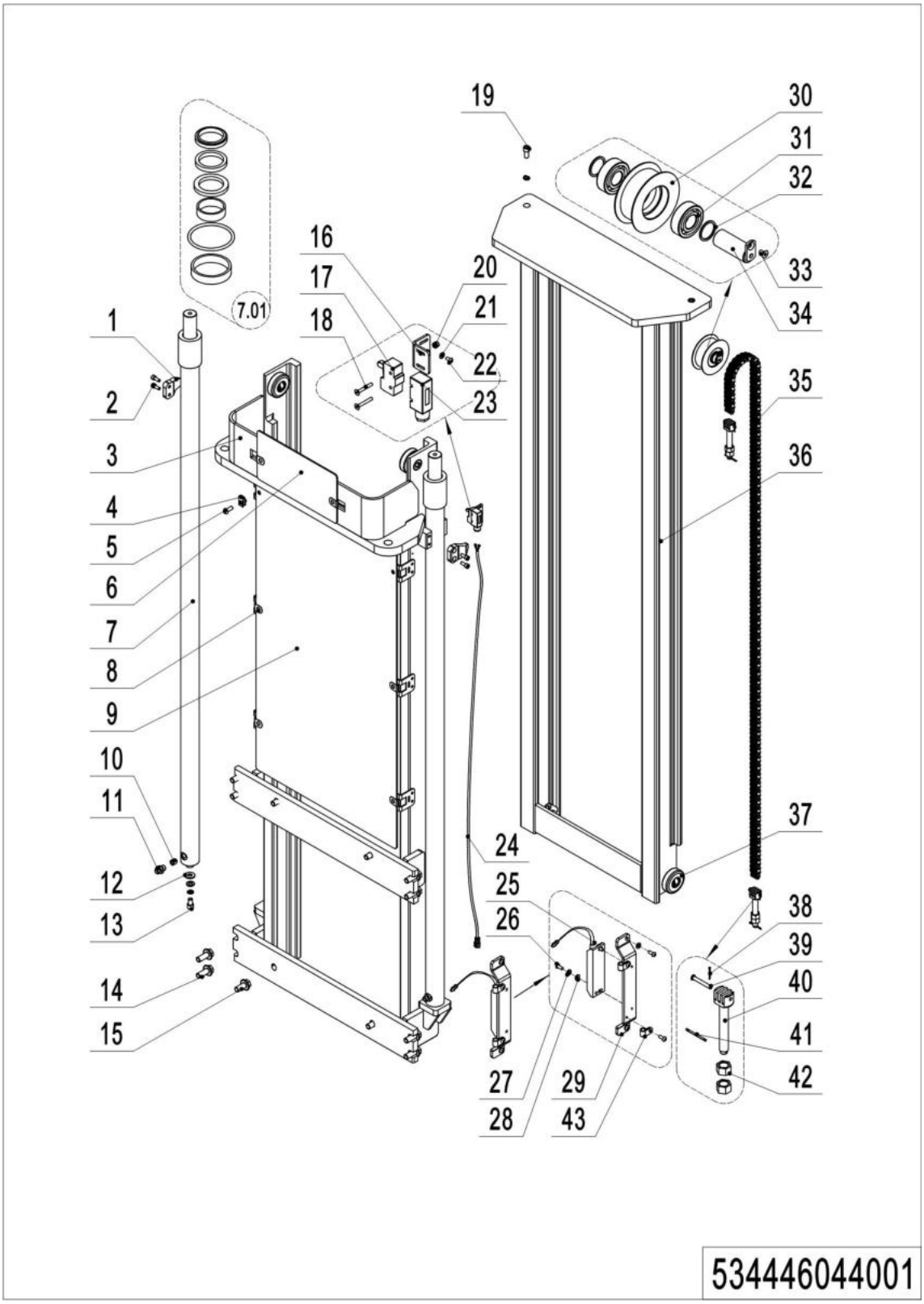

01 Two-stage mast standard lift (534446044001)

No.	Item Code	Mark	Item Description	Qty.	Substitute	Note
1	275044020076		Fixing Plate	2		
2	910200200057	1	Screw	4		
3	534444010013	2	Outer Mast(2900)	1		
3	534444010011	2	Outer Mast(3200)	1		
3	534444010009	2	Outer Mast(3600)	1		
4	940400400003		Cage Nut	2		
5	941100100005		Screw	2		
6	534744520037		Guard Plate	1		
7	534444010008		Cylinder	2		**2900**
7	534444010007		Cylinder	2		**3200**
7	534444010006		Cylinder	2		**3600**
7.01	534498510002		Seal Kit	1		
8	940400300001		Spring Buckle	4		
8	940400300001		Spring Buckle	6		
9	534744020011		Guard Plate	1		**2900**
9	534744520038		Guard Plate	1		**3200**
9	534744020006		Guard Plate	1		**3600**
10	950600300001		Safety Valve	2		
11	950400400003		Joint	2		
12	534744520015		Sub plate	2		
13	910200200096	1	Screw	2		
14	910100800006	1	Bolt	8		
15	910100800005	1	Bolt	4		
16	534744520036		Fixing Plate	1		
17	920200300001		Micro switch	1		
18	910200400007	1	Screw	2		
19	910200200097	1	Screw	2		
20	910300500001	1	Nut	2		
21	910400100003	1	Flat Washer	1		
22	910200300005	1	Screw	2		

1= Supply as package. 2= Supply with constraints. 3= Phasing-out supply. 4= Supply as assembly. 5= Check other tables.

01 Two-stage mast standard lift (534446044001) Continuation

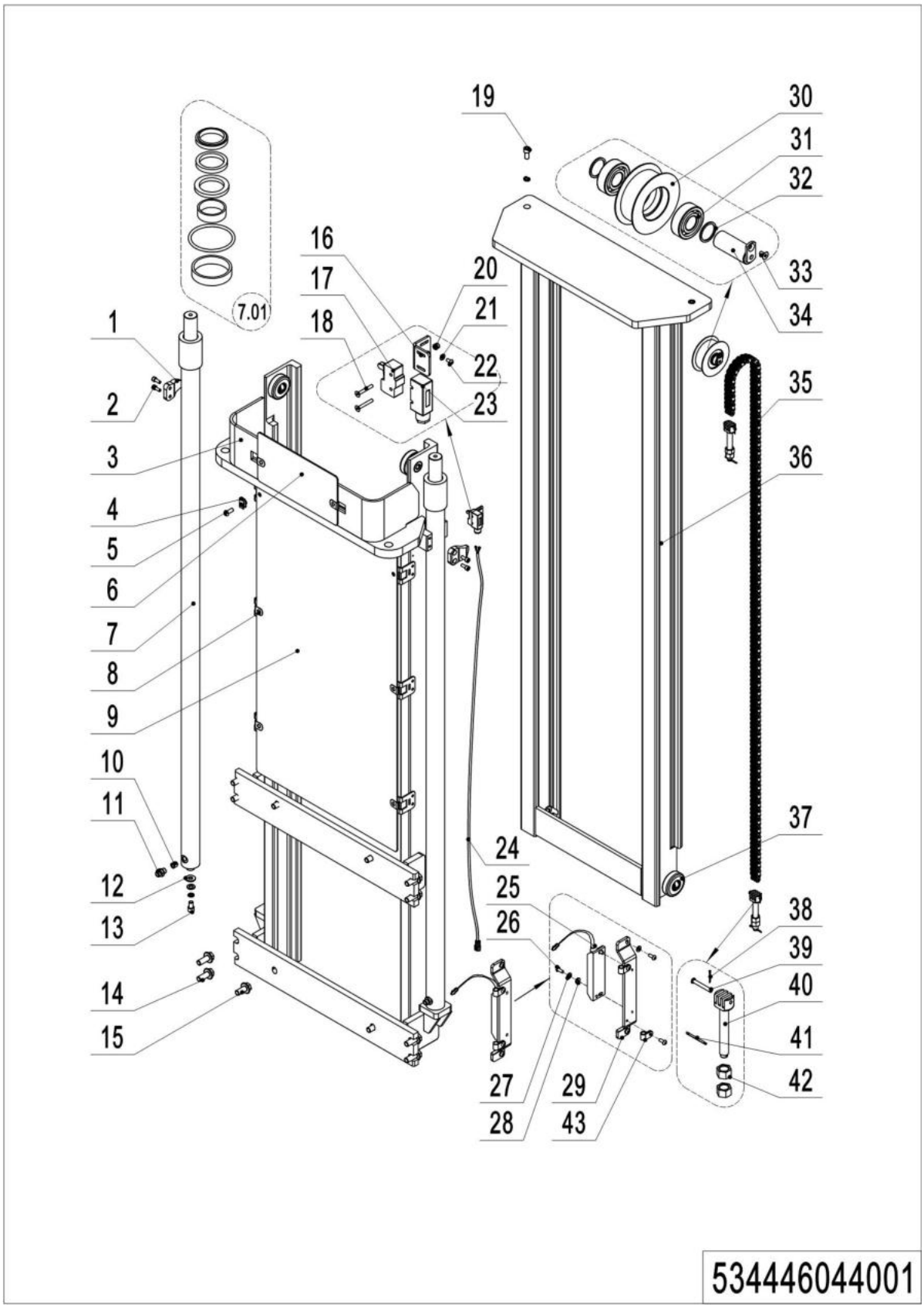

01 Two-stage mast standard lift (534446044001) Continuation

No.	Item Code	Mark	Item Description	Qty.	Substitute	Note
23	920200300008		Protective Cover	1		
24	534733010011		Wire Harness	1		**2900**
24	534733010013		Wire Harness	1		**3200**
24	534733010016		Wire Harness	1		**3600**
25	535933510005		Switch	1		
25	534433510001		Switch	1		**EN1175:2020**
26	910200500010	1	Screw	2		
26	910200500021		Screw	4		**EN1175:2020**
27	910400500003		Washer	2		
28	910400100003		Washer	4		**EN1175:2020**
29	534744520059		Protective Cover	1		
29	534744520080		Protective Cover	1		**EN1175:2020**
30	940200400006		Sprocket	1		
31	910700200021		Bearing	2		
32	940600500008	1	Washer	2		
33	910200400016	1	Screw	1		
34	533544510006		Pin	1		
35	534444010024		Chain	1		**2900**
35	534444010026		Chain	1		**3200**
35	534444010025		Chain	1		**3600**
36	534444010014	2	Inner Mast(2900)	1		
36	534444010012	2	Inner Mast(3200)	1		
36	534444010010	2	Inner Mast(3600)	1		
37	940200300001		Compound Roller	4		
38	910600600006	1	Cotter Pin	2		
39	941100800005		Pin	2		
40	533244020020		Chain Anchor	2		
41	910600600023	1	Cotter Pin	2		
42	910300200008	1	Nut	4		
43	921300200001		Cable fixer	2		

02 Two-stage mast full free lift (534446043501)

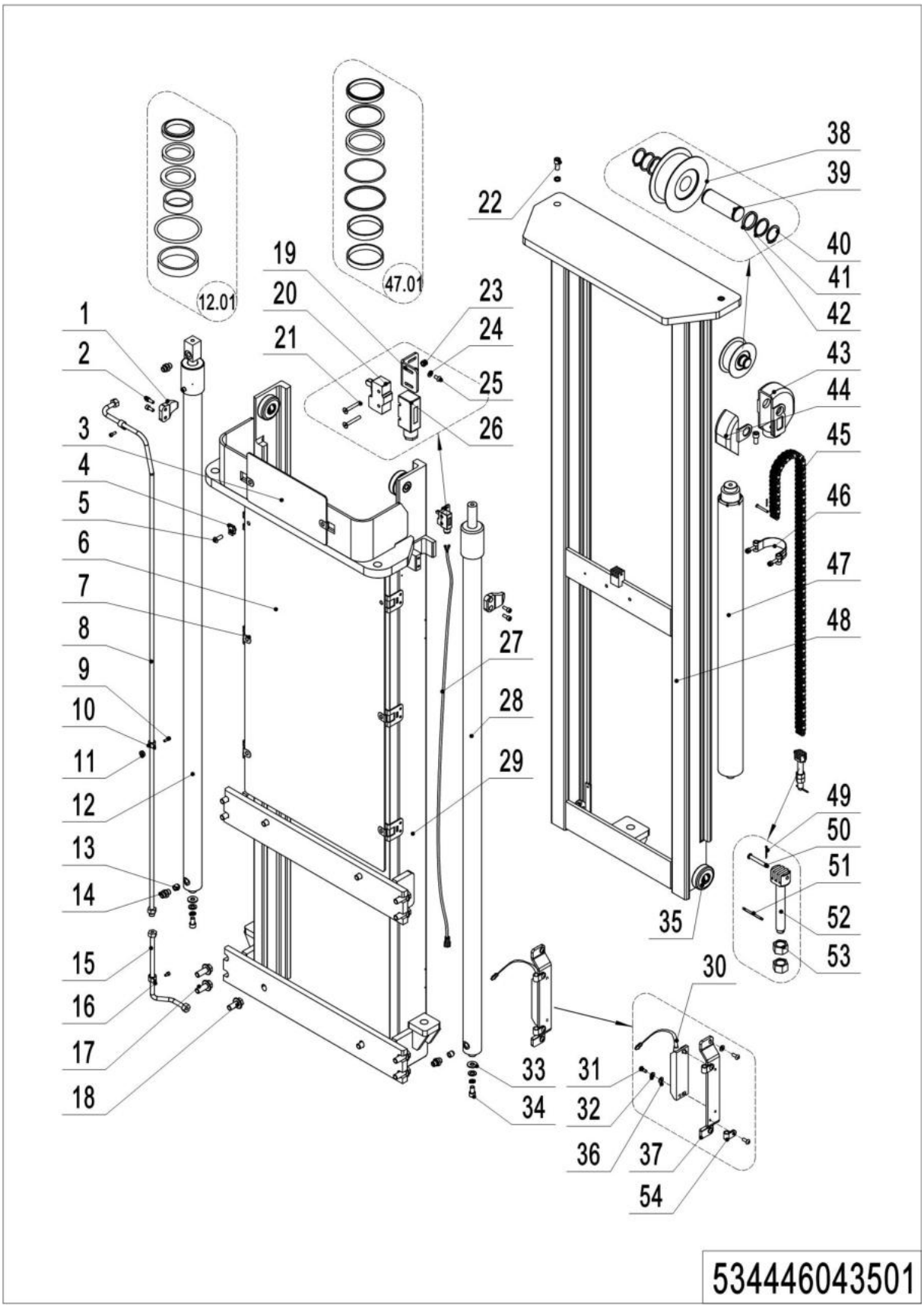

02 Two-stage mast full free lift (534446043501)

No.	Item Code	Mark	Item Description	Qty.	Substitute	Note
1	275044020076		Fixing Plate	2		
2	910200200057		Screw	4		
3	534744520037		Guard Plate	1		
4	940400400003		Cage Nut	2		
5	941100100005		Screw	2		
6	534744020011		Guard Plate	1		**2900**
6	534744520038		Guard Plate	1		**3200**
6	534744020006		Guard Plate	1		**3600**
7	940400300001		Spring Buckle	4		
7	940400300001		Spring Buckle	6		
8	534743510017		Steel Tube	1		**2900**
8	534743510016		Steel Tube	1		**3200**
8	534443520001		Steel Tube	1		**3600**
9	910200200035	1	Screw	2		
10	951000100001		Hose Clamp	2		
11	940600500001		Washer	2		
12	534444010017		Cylinder	1		**2900**
12	534444010016		Cylinder	1		**3200**
12	534444010015		Cylinder	1		**3600**
12.01	534498510000		Seal Kit	2		**Also for cylinder 28**
13	950600300001		Safety Valve	3		
14	950400400003		Joint	4		
15	534743510018		Steel Tube	1		
16	951000100003		Hose Clamp	1		
17	910100800006	1	Bolt	8		
18	910100800005	1	Bolt	4		
19	534744520036		Fixing Plate	1		
20	920200300001		Micro switch	1		
21	910200400007	1	Screw	2		
22	910200200097	1	Screw	3		

1= Supply as package. 2= Supply with constraints. 3= Phasing-out supply. 4= Supply as assembly. 5= Check other tables.

02 Two-stage mast full free lift (534446043501) Continuation 1

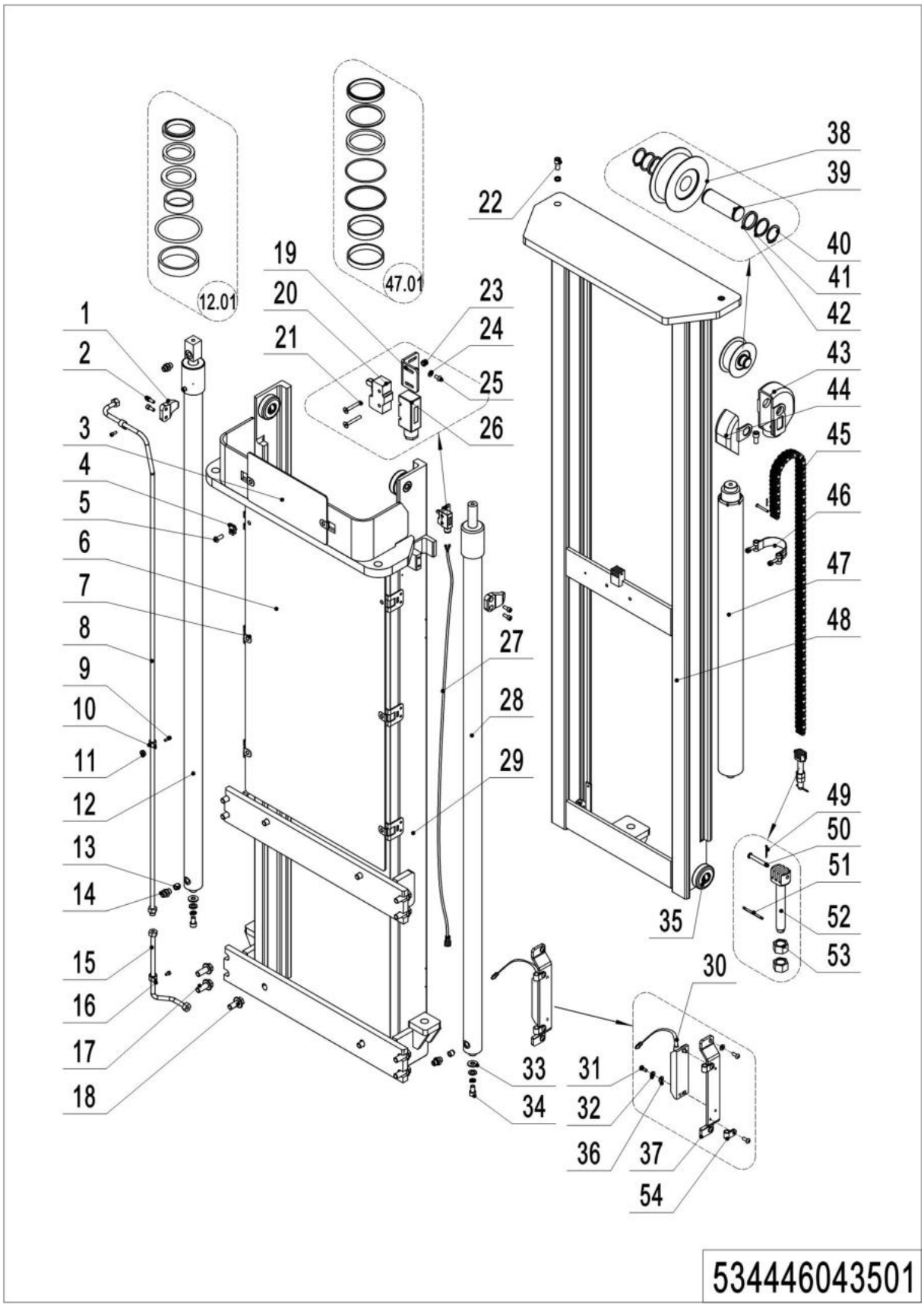

02 Two-stage mast full free lift (534446043501) Continuation 1

No.	Item Code	Mark	Item Description	Qty.	Substitute	Note
23	910300500001	1	Nut	2		
24	910400100003	1	Flat Washer	2		
25	910200300005	1	Screw	2		
26	920200300008		Protective Cover	1		
27	534733010011		Wire Harness	1		**2900**
27	534733010013		Wire Harness	1		**3200**
27	534733010016		Wire Harness	1		**3600**
28	534444010023		Cylinder	1		**2900**
28	534444010022		Cylinder	1		**3200**
28	534444010021		Cylinder	1		**3600**
29	534443510004	2	Outer Mast(2900)	1		
29	534443510002	2	Outer Mast(3200)	1		
29	534443510000	2	Outer Mast(3600)	1		
30	535933510005		Switch	1		
30	534433510001		Switch	1		**EN1175:2020**
31	910200500010		Screw	2		
31	910200500021		Screw	4		**EN1175:2020**
32	910400500003		Washer	2		
33	534744520015		Sub plate	2		
34	910200200096	1	Screw	2		
35	940200300001		Compound Roller	4		
36	910400100003		Washer	4		
37	534744520059		Protective Cover	1		
37	534744520080		Protective Cover	1		**EN1175:2020**
38	940200500010		Sprocket Bearing	1		
39	532644520037		Axle	1		
40	910401300016	1	Cir clip	2		
41	940600500008		Washer	2		
42	940600500009		Washer	2		
43	532644520035		Yoke	1		
44	532644520036		Side Cover	1		
45	251044510096		Chain	1		**2900**
45	534744510024		Chain	1		**3200**

1= Supply as package. 2= Supply with constraints. 3= Phasing-out supply. 4= Supply as assembly. 5= Check other tables.

02 Two-stage mast full free lift (534446043501) Continuation 2

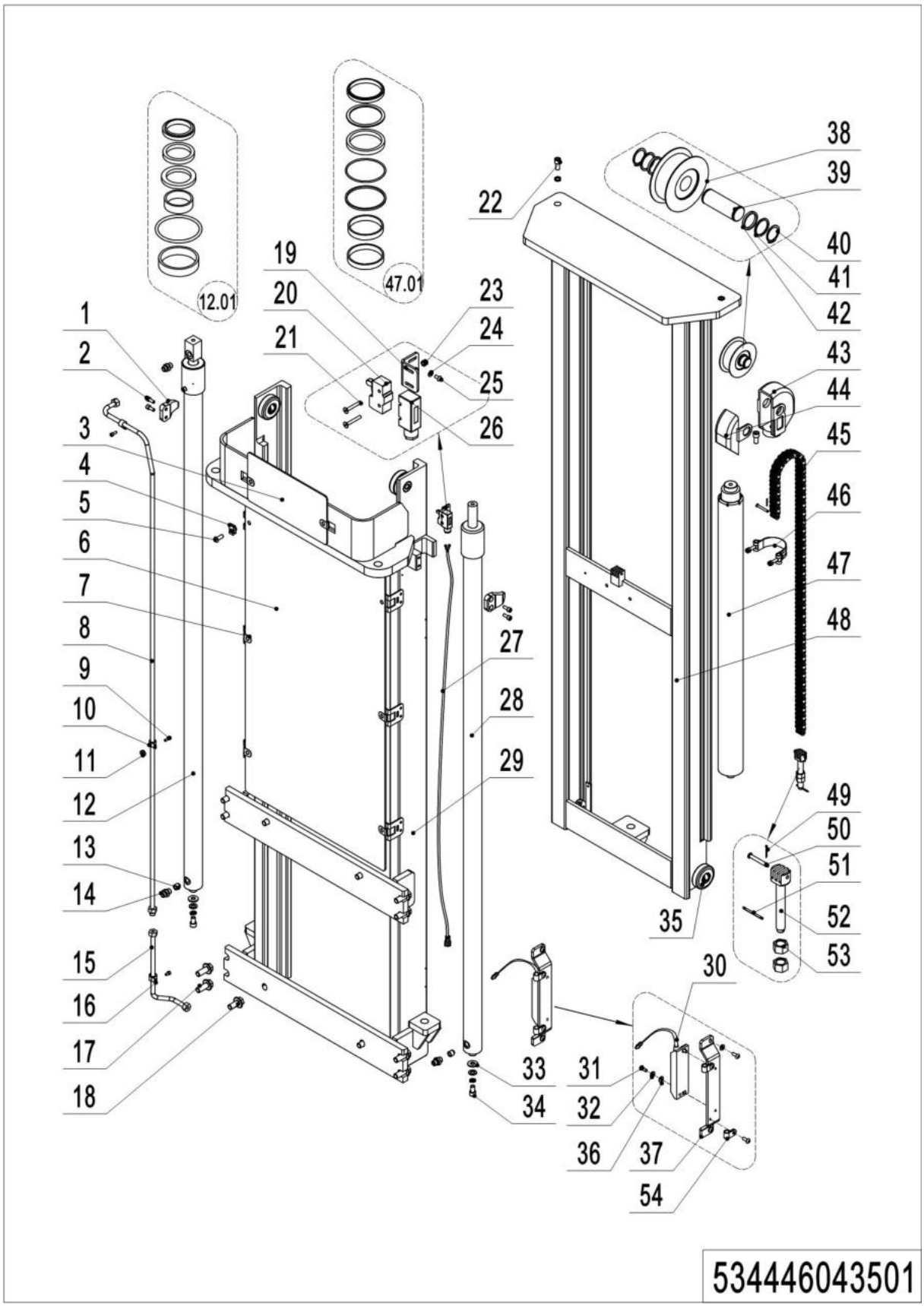

02 Two-stage mast full free lift (534446043501) Continuation 2

No.	Item Code	Mark	Item Description	Qty.	Substitute	Note
45	532644510079		Chain	1		**3600**
46	940800600002		Hoop	1		
47	534444010020		Cylinder	1		**2900**
47	534444010019		Cylinder	1		**3200**
47	534444010018		Cylinder	1		**3600**
47.01	534498510001		Seal Kit	1		
48	534443510005	2	Inner Mast(2900)	1		
48	534443510003	2	Inner Mast(3200)	1		
48	534443510001	2	Inner Mast(3600)	1		
49	910600600006	1	Cotter Pin	2		
50	941100800012		Pin	2		
51	910600600023	1	Cotter Pin	1		
52	532644520038		Chain Anchor	1		
53	910300200008	1	Nut	2		
54	921300200001		Cable fixer	2		

03 Triple Mast Full Free Lift (534446044501)

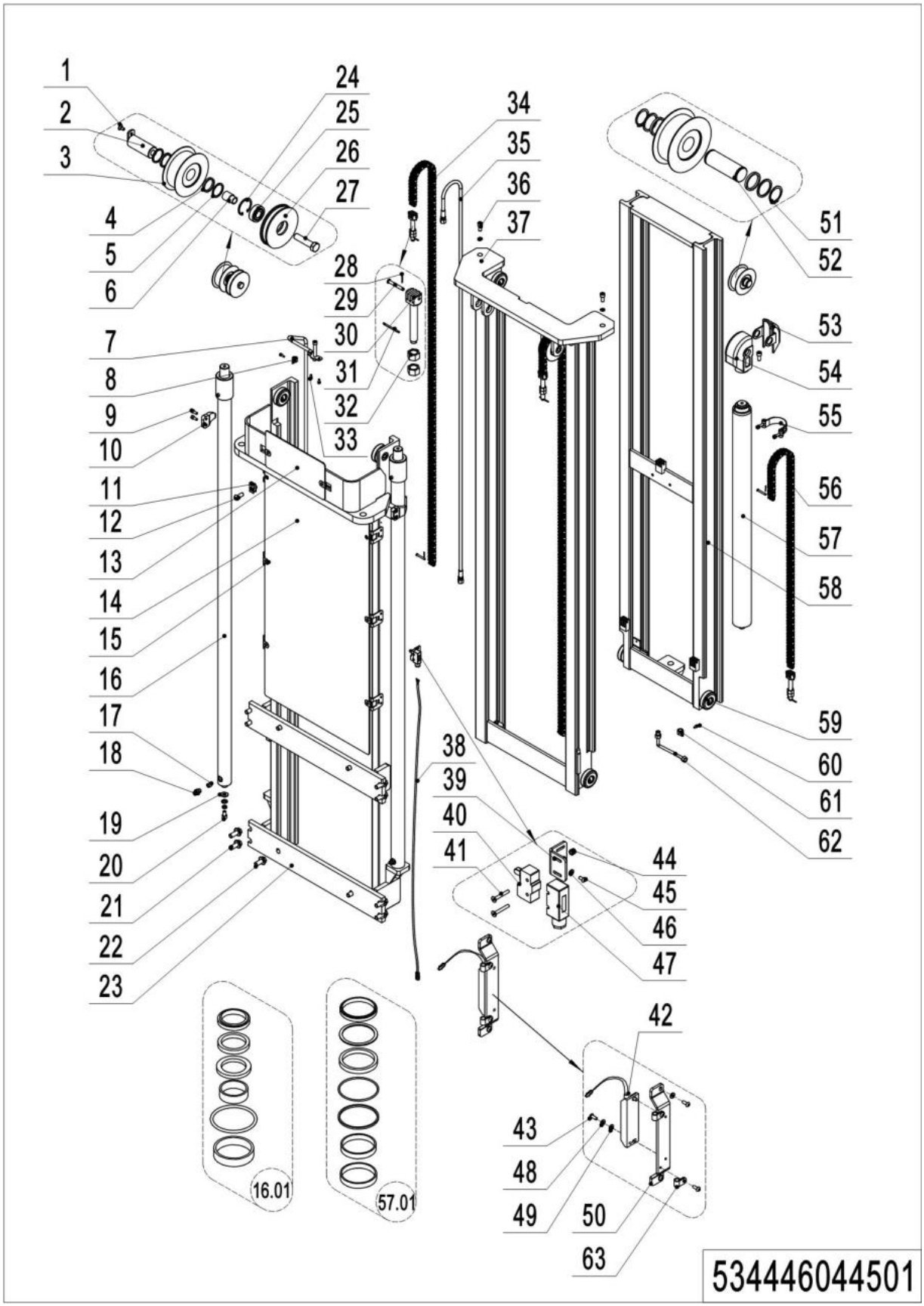

03 Triple Mast Full Free Lift (534446044501)

No.	Item Code	Mark	Item Description	Qty.	Substitute	Note
1	910200400016	1	Screw	2		
2	533544510006		Pin	2		
3	940200500010		Sprocket Bearing	3		
4	940600500009		Washer	6		
5	940600500008		Washer	6		
6	535944520001		Sleeve	1		
7	534744510021		Steel Tube	1		**4300**
7	534744510020		Steel Tube	1		**4600**
8	951000100001		Hose Clamp	2		
9	910200200057	1	Screw	4		
10	275044020076		Fixing Plate	2		
11	940400400003		Cage Nut	2		
12	941100100005		Screw	2		
13	534744520037		Guard Plate	1		
14	534744520039		Guard Plate	1		**4300**
14	534744520038		Guard Plate	1		**4600**
15	940400300001		Spring Buckle	6		
16	534744510017		Cylinder	2		**4300**
16	534744510016		Cylinder	2		**4600**
16.01	534798510000		Seal Kit	2		
17	950600300001		Safety Valve	3		
18	950400400003		Joint	3		
19	534744520015		Sub plate	2		
20	910200200096	1	Screw	2		
21	910100800006	1	Bolt	8		
22	910100800005	1	Bolt	4		
23	534444510004	2	Outer Mast(4300)	1		
23	534444510000	2	Outer Mast(4600)	1		
24	910401400013	1	Cir clip	1		
25	910700200019		Bearing	1		

1= Supply as package. 2= Supply with constraints. 3= Phasing-out supply. 4= Supply as assembly. 5= Check other tables.

03 Triple Mast Full Free Lift (534446044501) Continuation 1

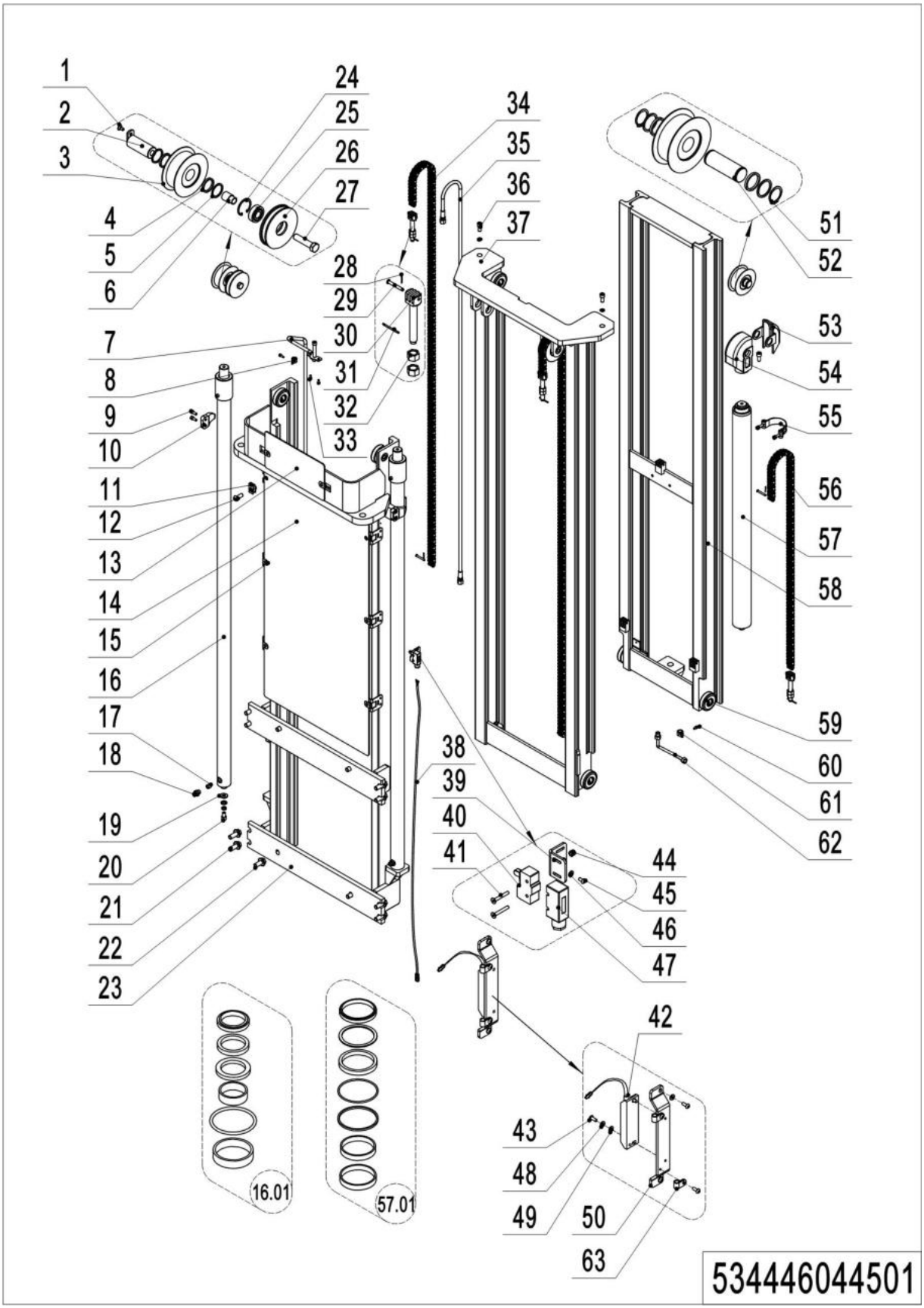

03 Triple Mast Full Free Lift (534446044501) Continuation 1

No.	Item Code	Mark	Item Description	Qty.	Substitute	Note
26	535944520000		Pulley	1		
27	910100100073	1	Bolt	1		
28	910600600006	1	Cotter Pin	6		
29	941100800012		Pin	6		
30	532644520038		Chain Anchor	3		
31	910600600023	1	Cotter Pin	3		
32	910300200008	1	Nut	6		
33	910200200033	1	Screw	2		
33	534745010009		Chain	2		**4300**
34	534145010005		Chain	2		**4600**
34	532644520143		Hose	1		**4300**
35	532644520144		Hose	1		**4600**
36	910200200097	1	Screw	3		
36	534444510005	2	Middle Mast(4300)	1		
37	534444510001	2	Middle Mast(4600)	1		
37	534733010012		Wire Harness	1		**4300**
38	534733010013		Wire Harness	1		**4600**
39	534744520036		Fixing Plate	1		
40	920200300001		Micro switch	1		
41	910200400007	1	Screw	2		
42	535933510005		Switch	1		
42	534433510001		Switch	1		**EN1175:2020**
43	910200500010	1	Screw	2		
43	910200500021		Screw	4		**EN1175:2020**
44	910300500001	1	Nut	2		
45	910200300005	1	Screw	2		
46	910400100003	1	Flat Washer	2		
47	920200300008		Protective Cover	1		
48	910400500003		Washer	2		
49	910400100003		Washer	4		
50	534744520059		Protective Cover	1		
50	534744520080		Protective Cover	1		**EN1175:2020**
51	910401300016	1	Circlip	2		

03 Triple Mast Full Free Lift (534446044501) Continuation 2

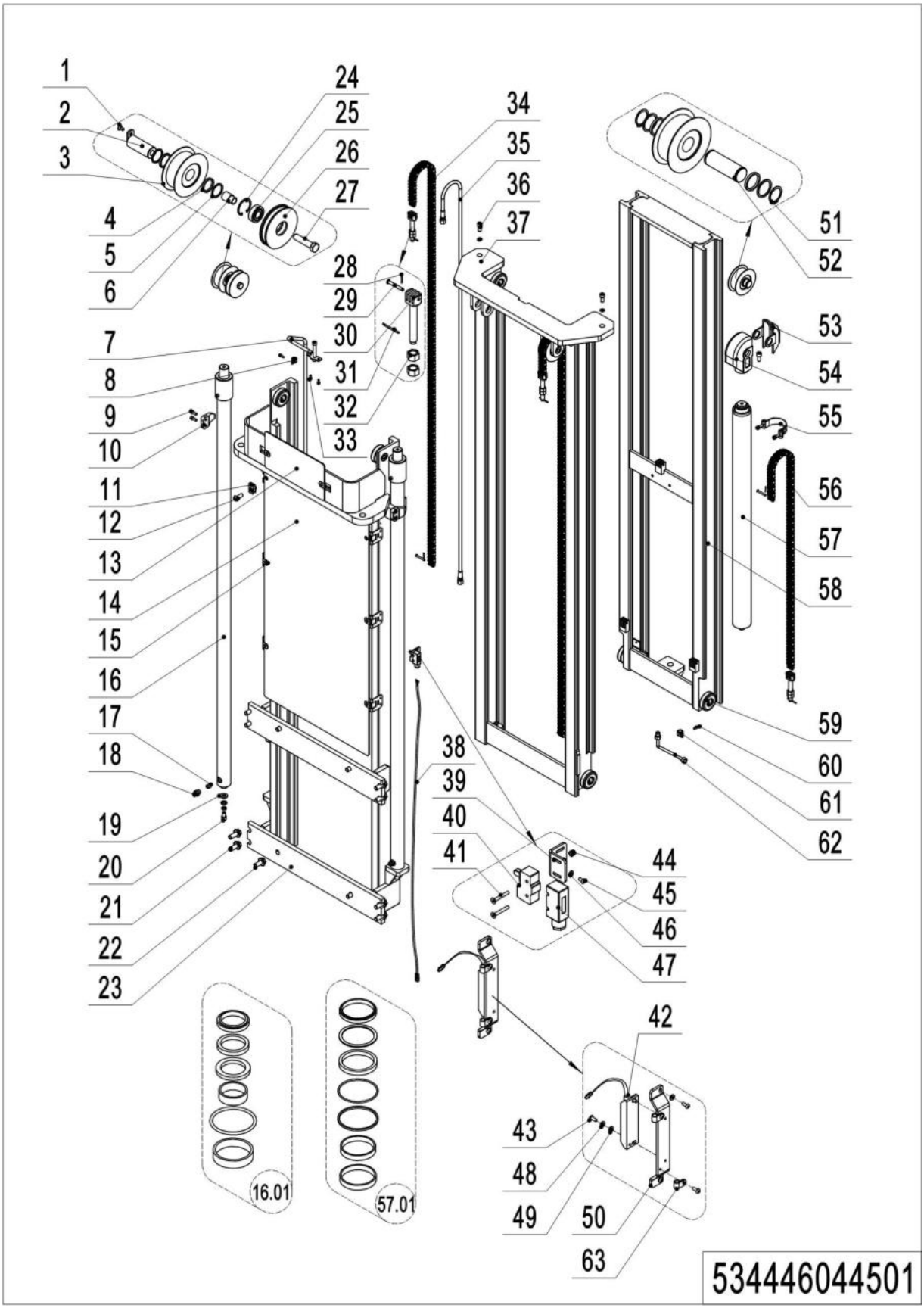

03 Triple Mast Full Free Lift (534446044501) Continuation 2

No.	Item Code	Mark	Item Description	Qty.	Substitute	Note
52	532644520037		Axle	1		
53	532644520036		Side Cover	1		
54	532644520035		Yoke	1		
55	940800600002		Hoop	1		
55	532644510083		Chain	1		**4300**
56	534444510003		Chain	1		**4600**
57	534744510013		Cylinder	1		**4300**
57	534744510012		Cylinder	1		**4600**
57.01	534798510001		Seal Kit	1		
58	534444510006	2	Inner Mast(4300)	1		
58	534444510002	2	Inner Mast(4600)	1		
59	940200300001		Compound Roller	8		
60	910200200032	1	Screw	1		
61	951000100003		Hose Clamp	1		
62	533544520006		Steel Tube	1		
63	921300200001		Cable fixer	2		

Chapter 5: Steering System, Braking System, Wheels

01 Tiller Unit (504446011001)

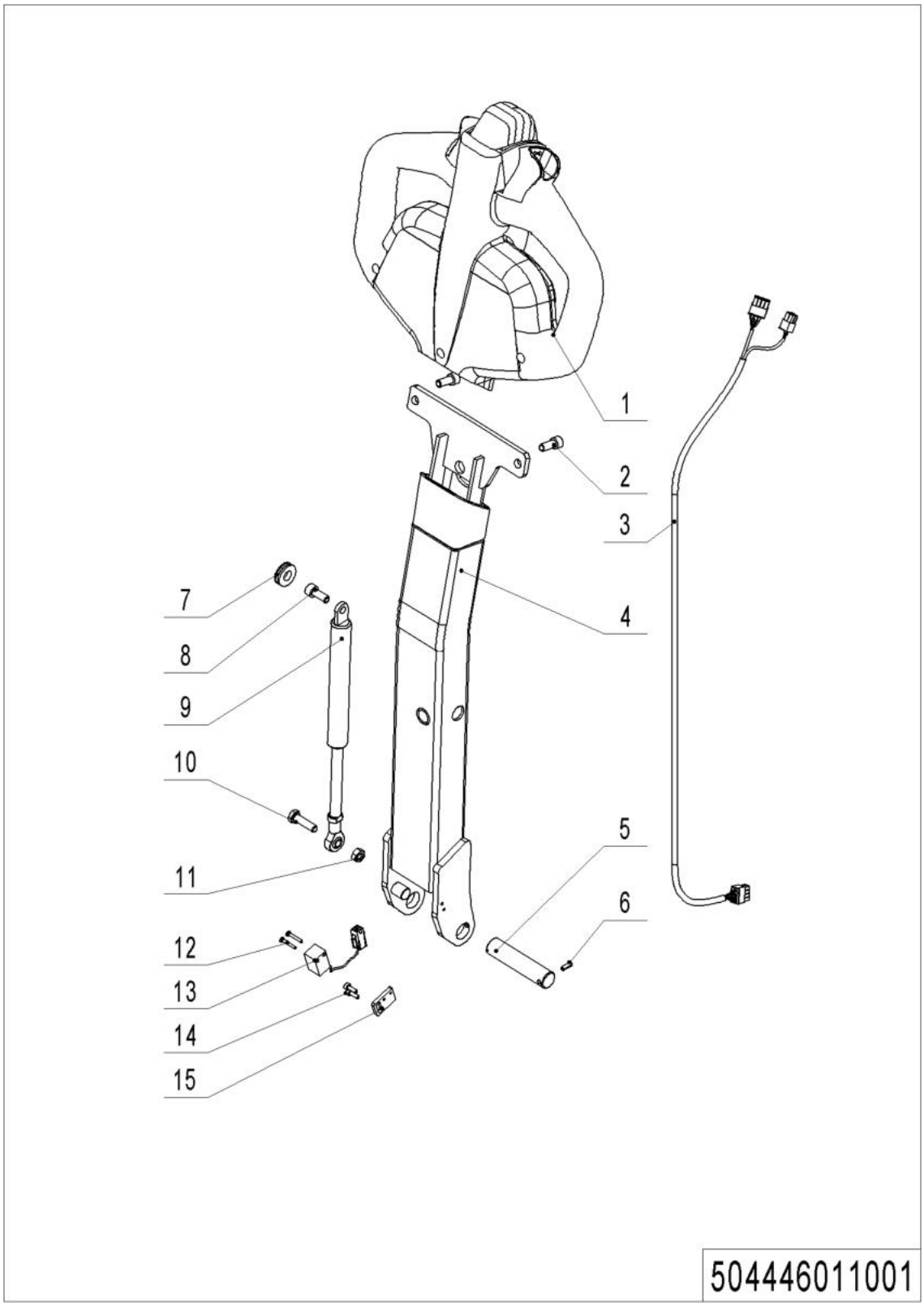

01 Tiller Unit (504446011001)

No.	Item Code	Mark	Item Description	Qty.	Substitute	Note
1	922100100012		Tiller	1		**See 535946011002**
1	922100100099		Tiller	1		**See 535946011002 (EN1175:2020)**
2	910200200057	1	Screw	2		
3	534733010001		Wire Harness	1		
3	534733010032		Wire Harness	1		**EN1175:2020**
4	504411010001		Tiller	1		
5	504411020011		Axle	1		
6	910600400009	1	Spring Pin	1		
7	502311020009		Close Plate	1		
8	941100400001	1	Screw	1		
9	940400100011		Air Spring	1		
10	910100300024	1	Bolt	1		
11	910300100006	1	Nut	1		
12	910200500015	1	Screw	2		
13	505633510002		Proximity Switch	1		
14	910200200014	1	Screw	2		
15	504411020009		Baseboard	1		

02 Control Handle（535946011002）

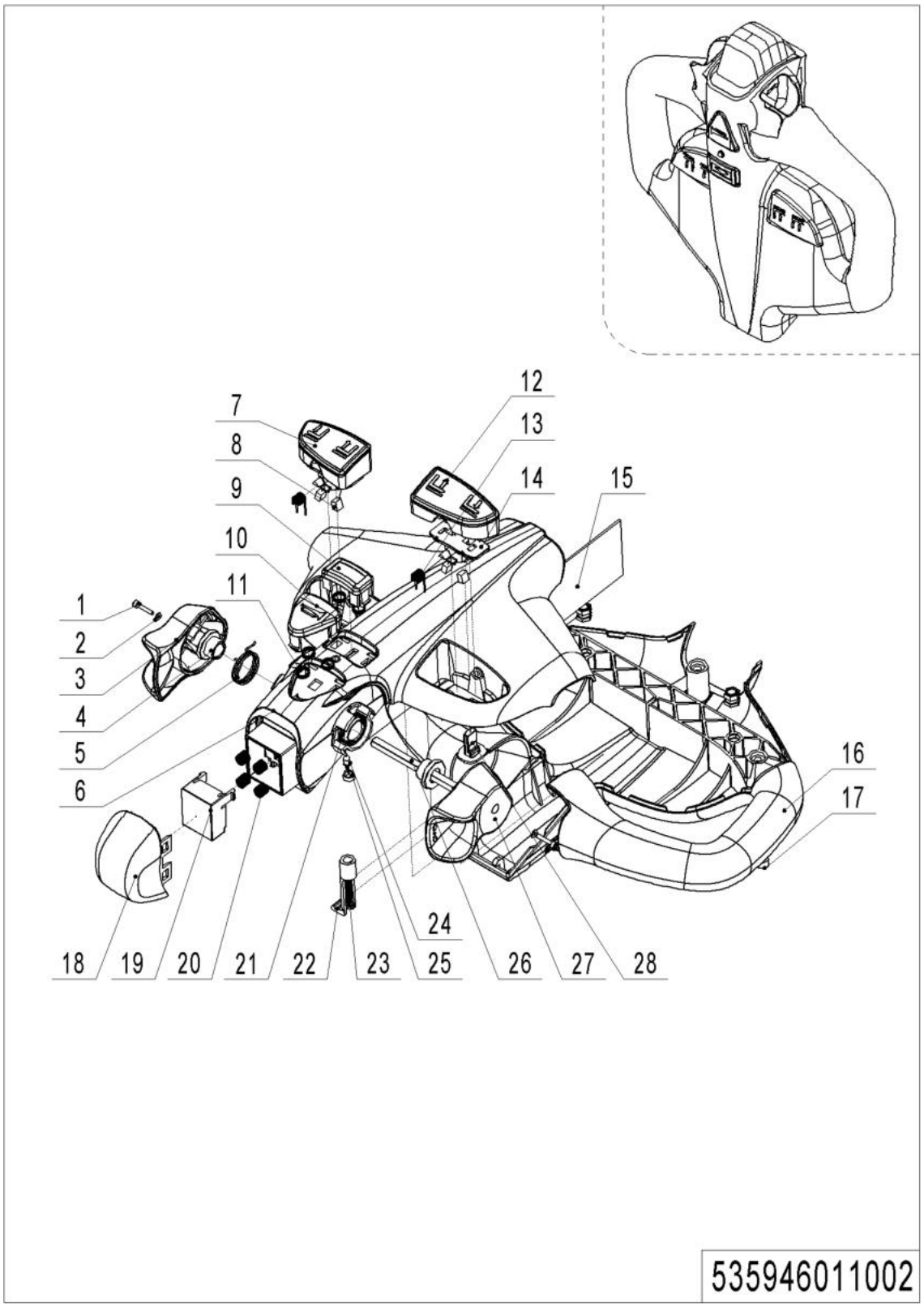

02 Control Handle (535946011002)

No.	Item Code	Mark	Item Description	Qty.	Substitute	Note
--	922100100001		Control Handle	1		
1	505698520008		Screw	2		
2	505698520009		Washer	2		
3	505698520001		Traction lever	1		
4	505698520004		Sleeve	2		
5	505698520027		Torsional Spring	1		
6	505698520014		Handle Cap	1		
7	505698520016		Button Cap	1		
8	505698520005		Magnet	4		
9	505698520021		Button Cap	1		
10	505698520002		Horn Button	1		
11	505698520003		Spring	5		
12	505698520022		Button Cap	1		
13	505698520018		Torsional Spring	2		
14	505698520017		Fixing Base	2		
15	505698520028		circuit Board	1		
16	505698520015		Handle Cap	1		
17	505698520007		Screw	3		
18	505698520020		Button Cap-	1		
19	505698520019		Pedestal	1		
20	505698520006		Spring	4		
21	505698520026		Torsional Spring	1		
22	505698520012		Clamp	1		
23	505698520023		Screw	1		
24	505698520024		Light	1		
25	505698520025		Lamp Holder	1		
26	505698520011		Axle-Traction lever	1		
27	505698520010		Traction lever	1		
28	505698520013		Sensor	2		

02 Control Handle(EN1175:2020) (566546010002)

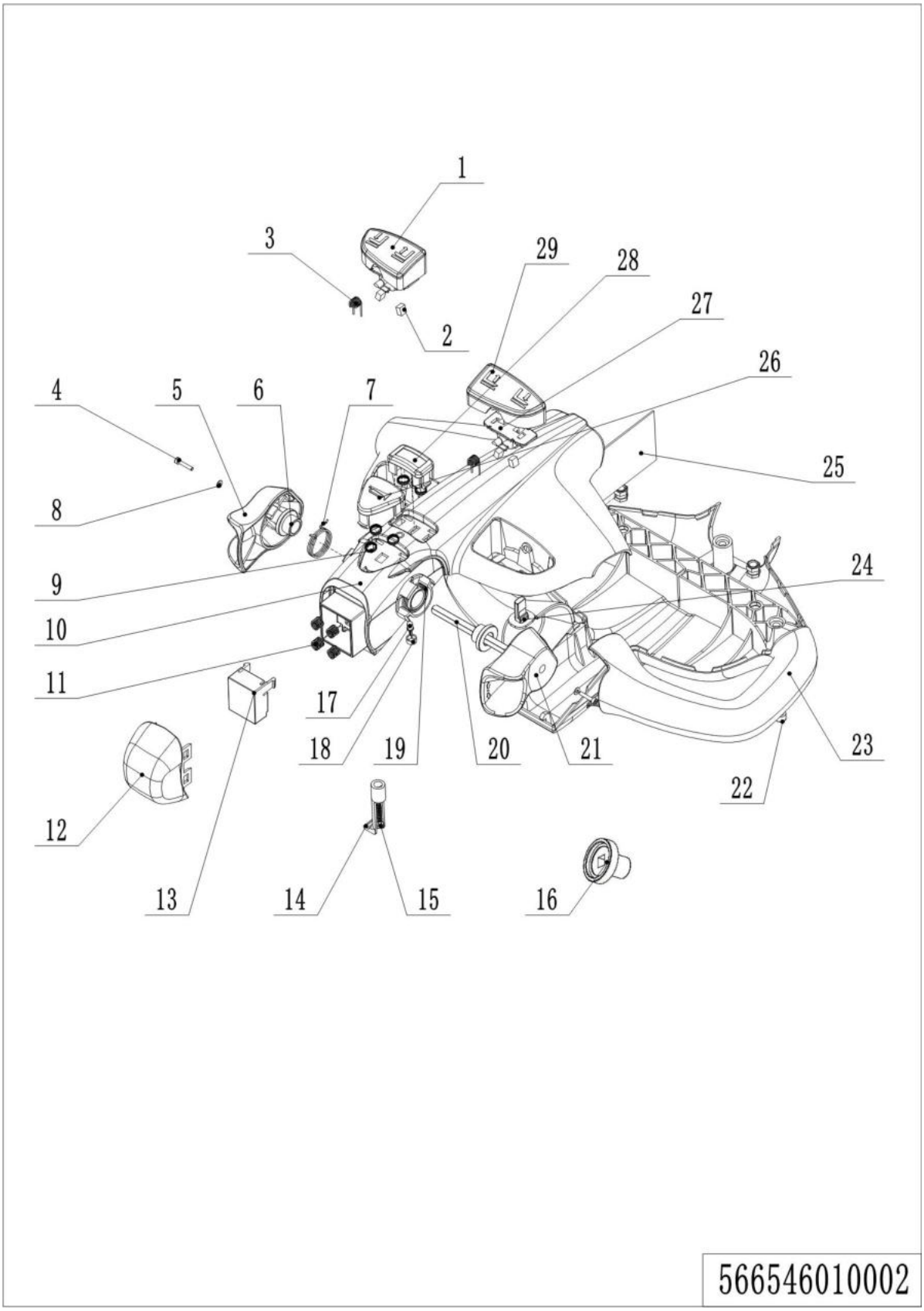

02 Control Handle (EN1175:2020) (566546010002)

No.	Item Code	Mark	Item Description	Qty.	Substitute	Note
1	505698520016		Button cap	1		
2	505698520005		Magnet	4		
3	505698520018		Torsional Spring	2		
4	505698520008		Screw	2		
5	505698520001		Traction lever	1		
6	505698520004		Sleeve	2		
7	505698520027		Torsional Spring	1		
8	505698520009		Washer	2		
9	505698520003		Spring	5		
10	505698520099		Handle Cap	1		
11	505698520006		Spring	4		
12	505698520020		Button Cap-	1		
13	505698520100		Pedestal	1		
14	505698520012		Clamp	1		
15	505698520023		Screw	1		
16	505698520102		Magnet holder	2		
17	505698520024		Light	1		
18	505698520025		Lamp Holder	1		
19	505698520026		Torsional Spring	1		
20	505698520011		Axle-Traction lever	1		
21	505698520010		Traction lever	1		
22	505698520007		Screw	3		
23	505698520015		Handle Cap	1		
24	505698520013		Sensor	2		
25	505698520101		circuit Board	1		
26	505698520002		Horn Button	1		
27	505698520017		Fixing Base	2		
28	505698520021		Button Cap	1		
29	505698520022		Button Cap	1		

03 Load Wheel (532946017001)

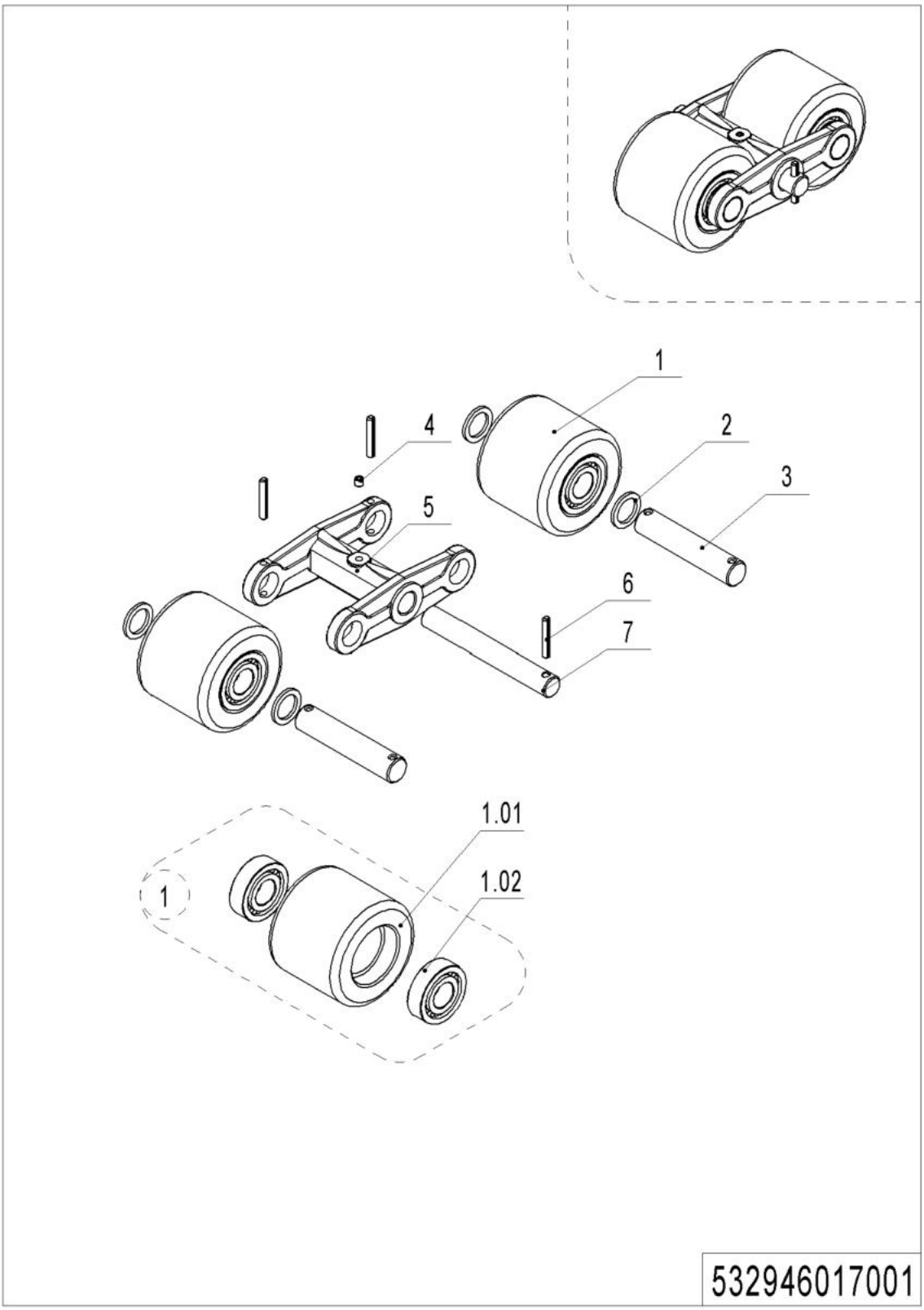

03 Load Wheel (532946017001)

No.	Item Code	Mark	Item Description	Qty.	Substitute	Note
--	532998510000		Wheel Assembly	2		
1	532998510001		Wheel Kits	4		
1.01	940300300009		WheelΦ84x70	4		
1.02	910700200019		Bearing	8		
2	940600500004	1	Washer	8		
3	504117020005		Axle	4		
4	911200100001		Oil Cup	2		
5	504117020004		Wheel Carrier	2		
6	910600400027	1	Spring Pin	6		
7	504117020003		Axle	2		

04 Caster (534746016501)

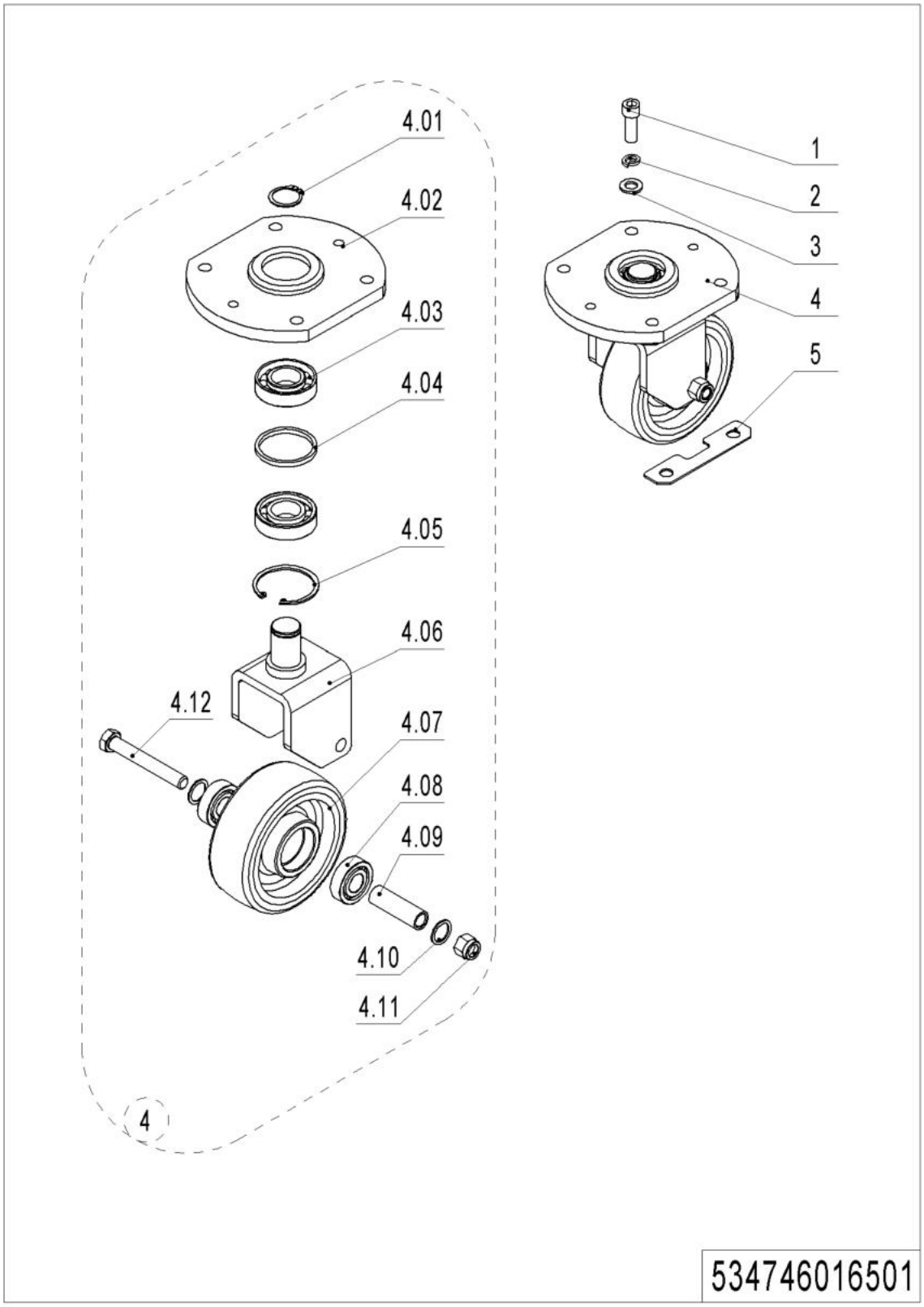

04 Caster (534746016501)

No.	Item Code	Mark	Item Description	Qty.	Substitute	Note
1	910200200099	1	Screw	4		
2	910400500008	1	Spring Washer	4		
3	910400100008	1	Flat Washer	4		
4	534716510002		Caster Assembly	1		
4.01	910401300016	1	Circlip	1		
4.02	534716510000		Bracket	1		
4.03	910700400004		Bearing	2		
4.04	532616520001	1	Check Ring	1		
4.05	910401400018	1	Circlip	1		
4.06	534716510001	2	Wheel Carrier	1		
4.07	940300300020		WheelΦ150x54	1		
4.08	910700200019		Bearing	2		
4.09	532616520003		Bushing	1		
4.10	940600500014	1	Washer	2		
4.11	910300500007	1	Nut	1		
4.12	910100100069	1	Bolt	1		
5	534721520026		Subplate	6		

Chapter 6: Electrical Parts

01 Display Assembly （534746010001）

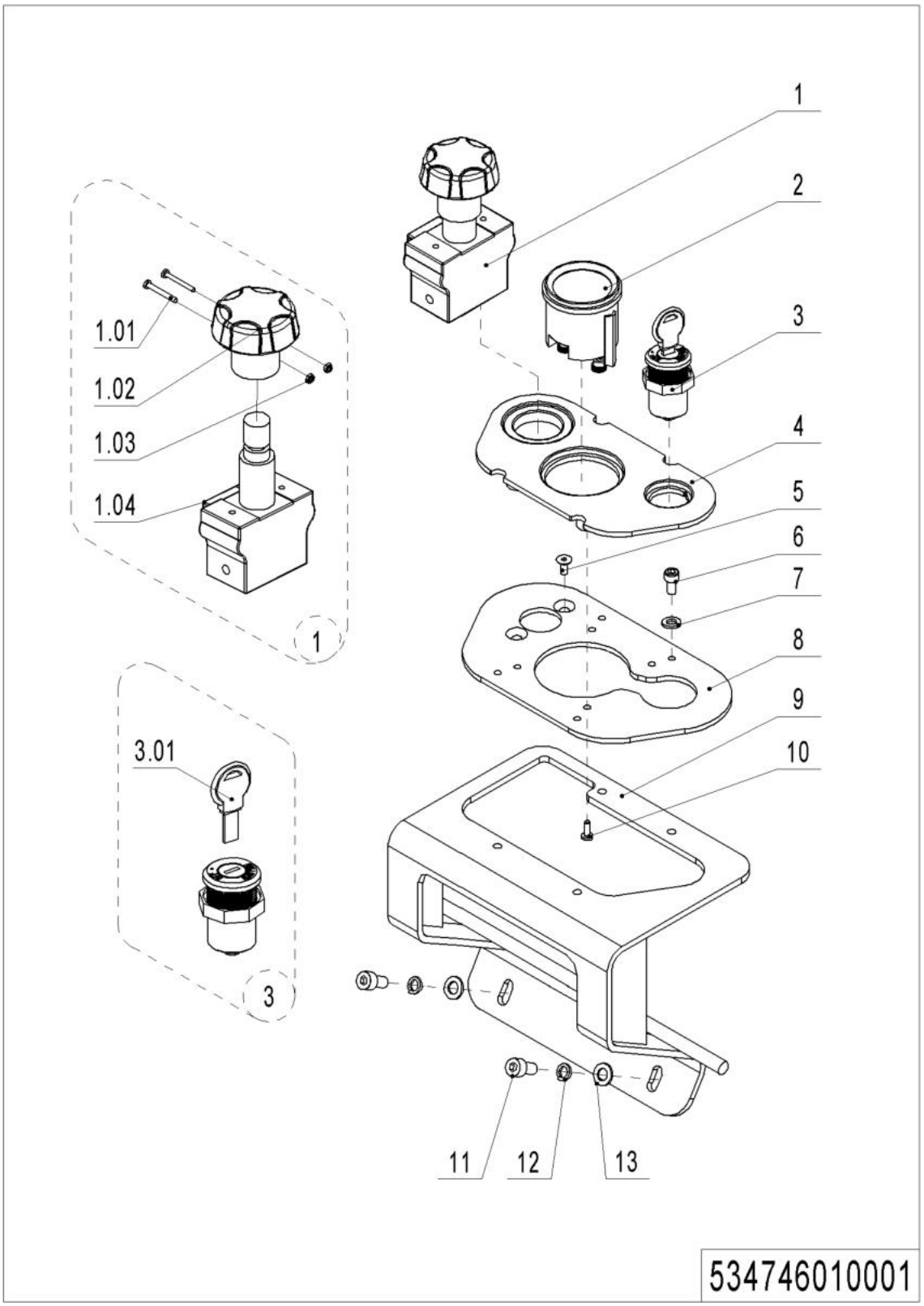

1= Supply as package. 2= Supply with constraints. 3= Phasing-out supply. 4= Supply as assembly. 5= Check other tables.

01 Display Assembly（534746010001）

No.	Item Code	Mark	Item Description	Qty.	Substitute	Note
1	920200100001		Emergency Button	1		
1.01	910200500016		Screw	2		
1.02	505698520029		Button	1		
1.03	910300100002		Nut	2		
1.04	505698520030		Proximity Switch	1		
2	921100100049		仪表	1		
3	920200200025		Key Switch	1		
4	534710020004		Panel	1		
5	910200400010		Screw	2		
6	910200200036		Screw	4		
7	910400100005		Flat Washer	4		
8	534710020005		Fixing Base	1		
9	534710010000		Mounting Plate	1		
10	910201300001		Screw	4		
11	910200200055		Screw	2		
12	910400500006		Spring Washer	2		
13	910400100006		Flat Washer	2		

02 Display Assembly(EN1175:2020) (534746010001)

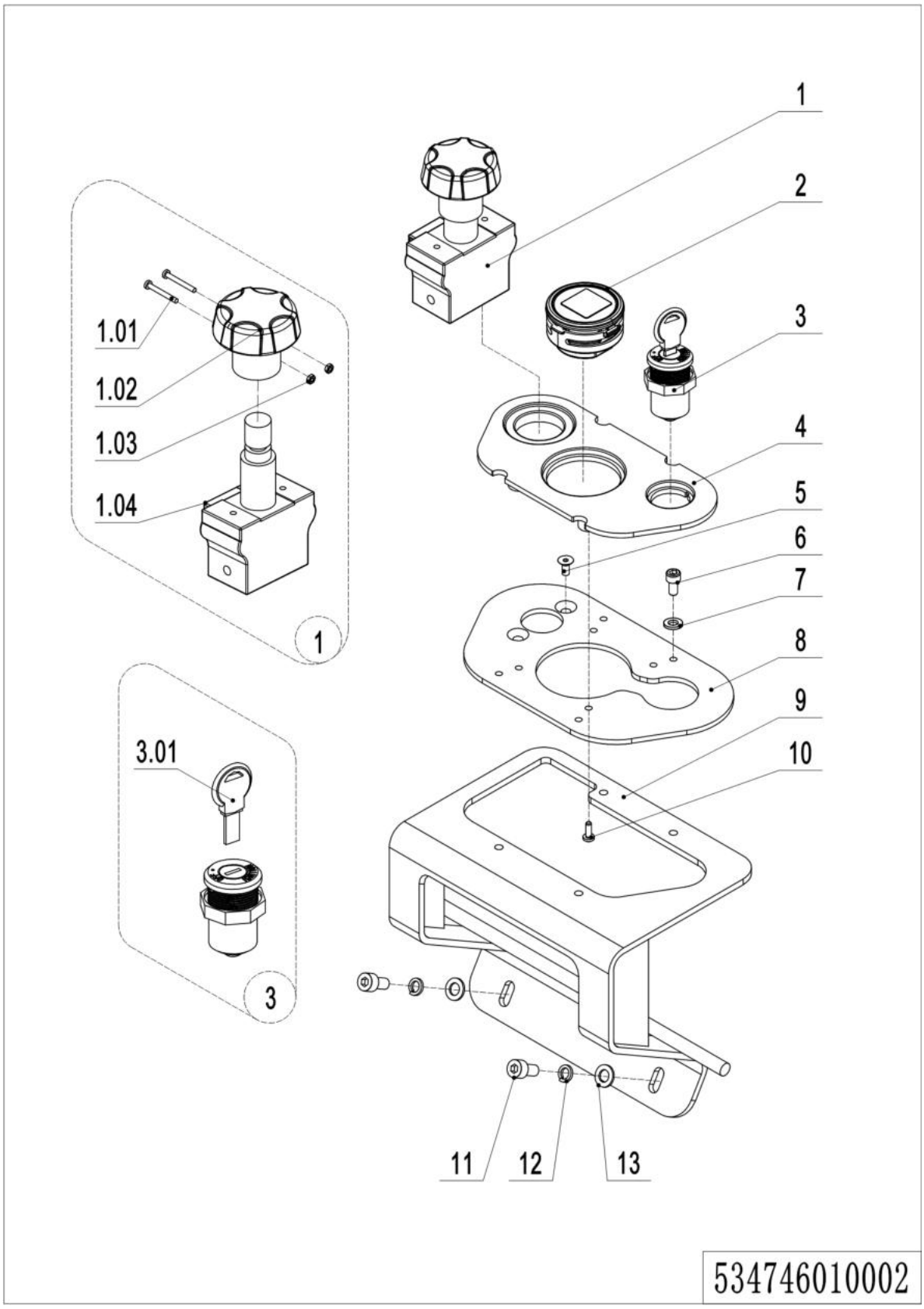

02 Display Assembly (EN1175:2020) (534746010001)

No.	Item Code	Mark	Item Description	Qty.	Substitute	Note
1	920200100001		Emergency Button	1		
1.01	910200500016		Screw	2		
1.02	505698520029		Button	1		
1.03	910300100002		Nut	2		
1. 04	505698520030		Proximity Switch	1		
2	921100100116		Display	1		
3	505634010000		Key Switch	1		
3	505634010001		Key Switch	1		**Only for lithium battery**
3.01	505698520031		Key	1		
4	534710020004		Panel	1		
5	910200400010		Screw	2		
6	910200200036		Screw	4		
7	910400100005		Flat Washer	4		
8	534710020005		Fixing Base	1		
9	534710010000		Mounting Plate	1		
10	910201300001		Screw	4		
11	910200200055		Screw	2		
12	910400500006		Spring Washer	2		
13	910400100006		Flat Washer	2		

03 Electronic Components (534446033001)

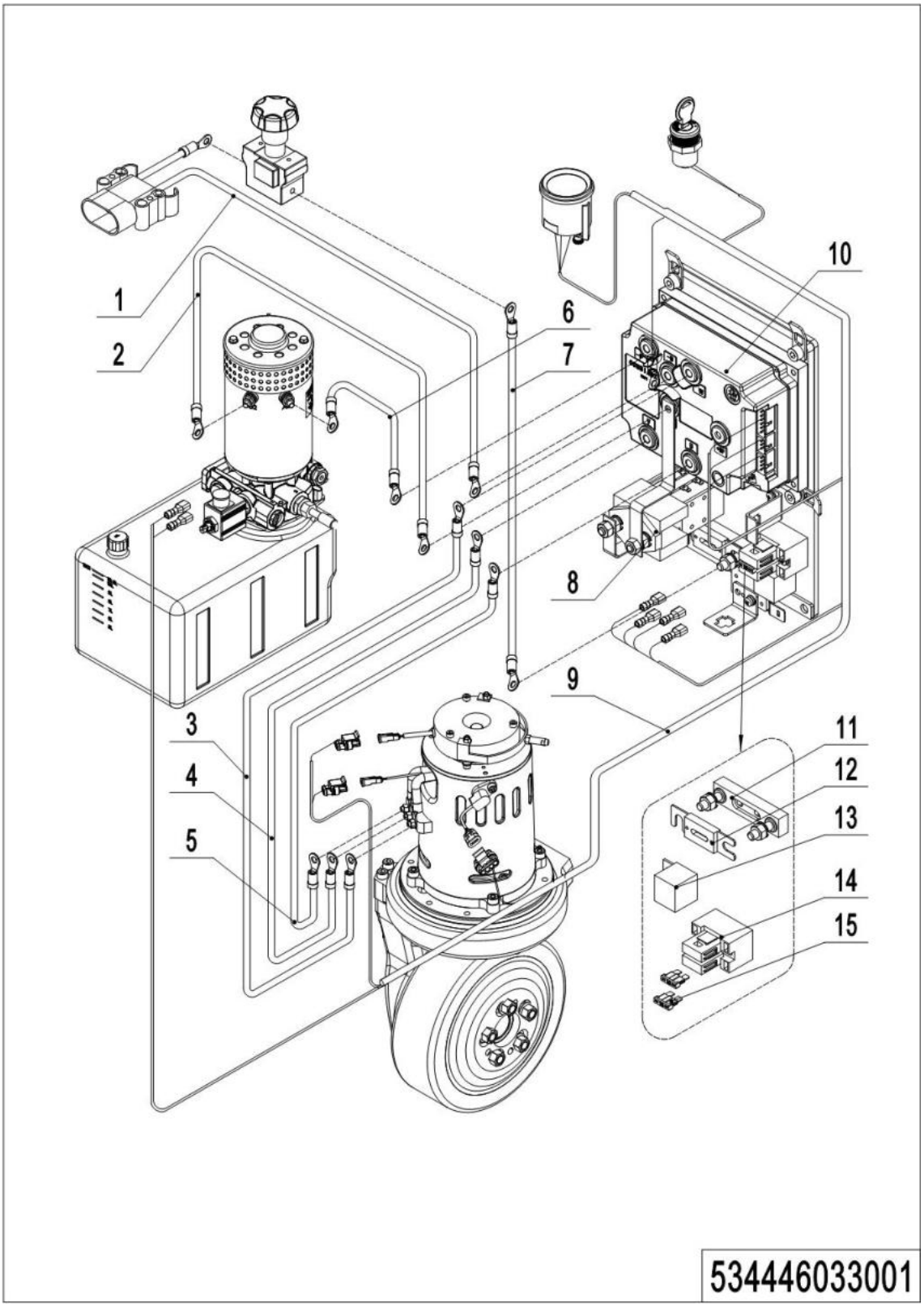

1= Supply as package. 2= Supply with constraints. 3= Phasing-out supply. 4= Supply as assembly. 5= Check other tables.

03 Electronic Components（534446033001）

No.	Item Code	Mark	Item Description	Qty.	Substitute	Note
1	534733010008		Wire Harness	1		
2	534433010000		Cable	1		
3	534733010005		Cable	1		
4	534733010004		Cable	1		
5	534733010003		Cable	1		
6	534433010001		Cable	1		
7	534733010009		Cable	1		
8	920700100002		Contactor	1		
9	534733010000		Wire Harness	1		
10	921400100048		Controller	1		
11	920100400002		Fuse Holder	1		
12	920100100013		Fuse350A	1		
13	920800100001		Relay	1		
14	920100400005		Fuse Holder	1		
15	920100200002		Fuse10A	2		

04 Electronic Components(EN1175:2020) (534746033002)

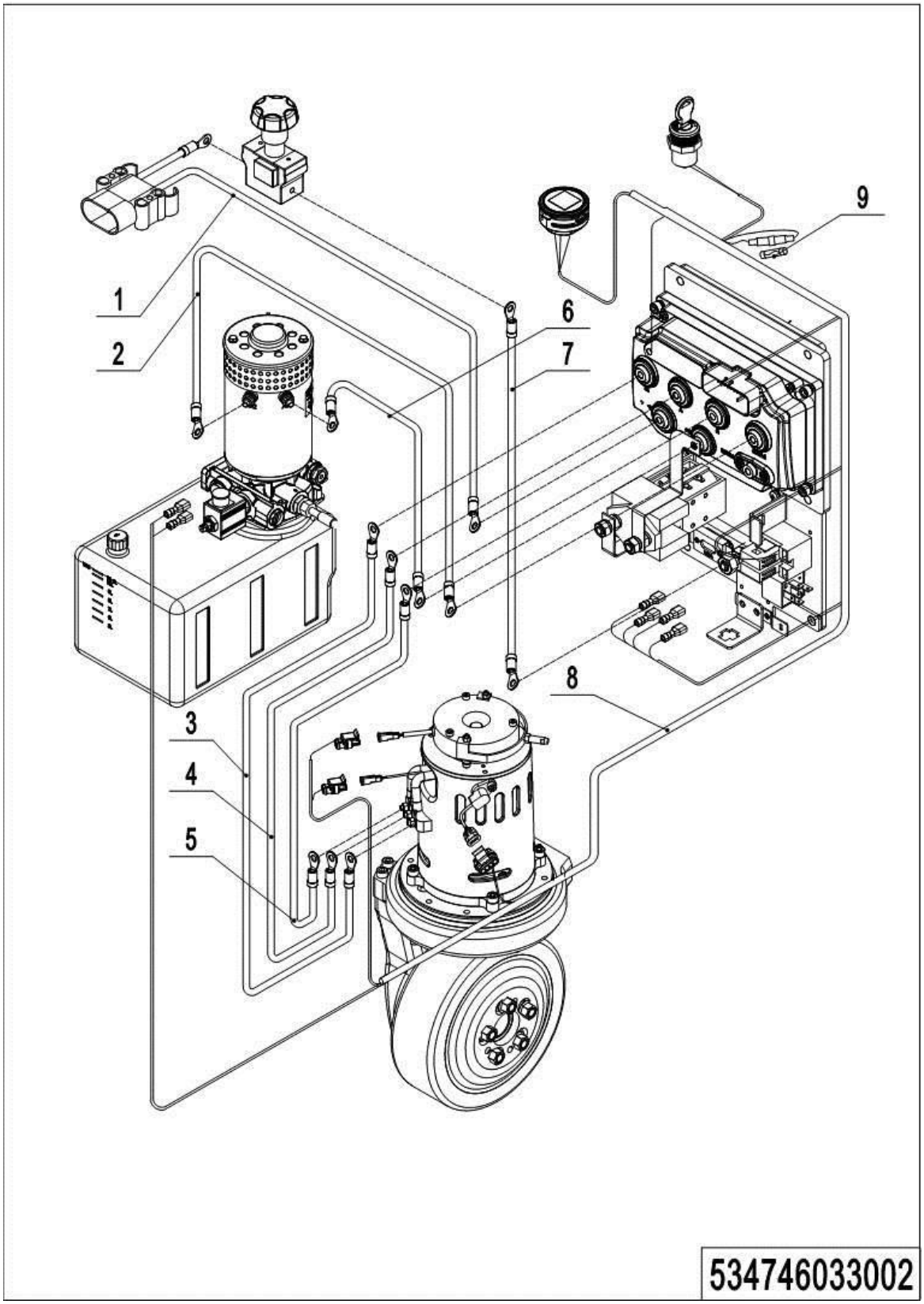

04 Electronic Components (EN1175:2020) (534746033002)

No.	Item Code	Mark	Item Description	Qty.	Substitute	Note
1	534733010031		Wire Harness	1		
1	534733010042		Wire Harness	1		**Only for lithium battery**
2	534733010033		Cable	1		
3	534733010034		Cable	1		
4	534733010027		Cable	1		
5	534733010028		Cable	1		
6	534733010029		Cable	1		
7	534733010009		Cable	1		
8	534733010026		Wire Harness	1		
9	920100300001		Fuse 0.5A	1		

05 Electric control assembly (534746033003) (EN1175:2020)

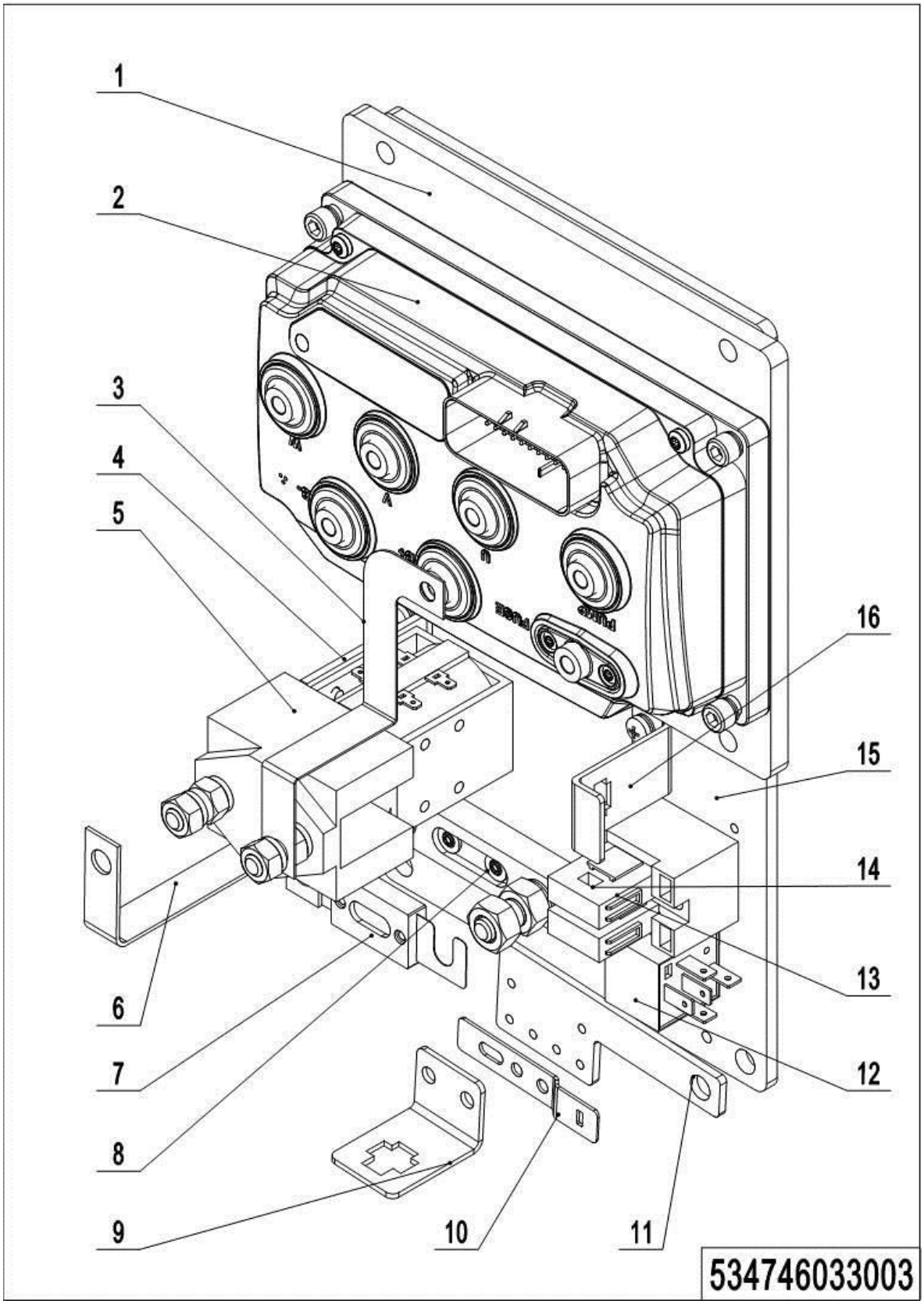

05 Electric control assembly (534746033003)

No.	Item Code	Mark	Item Description	Qty.	Substitute	Note
1	534733020003		Aluminium plate	1		
2	921400100124		Controller	1		
3	534733020004		Copper bar	1		
4	921300400004		Fixed mount	1		
5	920700100002		Contactor	1		
6	534733020002		Copper bar	1		
7	920100100013		Fuse350A 350A	1		
8	920100400002		Fuse Holder	1		
9	921300300002		Fixed mount	1		
10	921300300005		Fixed mount	1		
11	921300300008		Fixed mount	1		
12	920800100011		Relay	1		
13	920100400005		Fuse Holder	1		
14	920100200002		Fuse10A 10A	1		
15	534721520027		Mounting plate	1		
16	921300300001		Fixed mount	1		

06 Charger (534446036501)

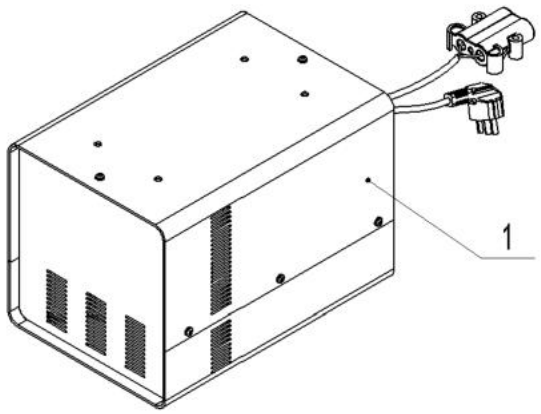

534446036501

1= Supply as package. 2= Supply with constraints. 3= Phasing-out supply. 4= Supply as assembly. 5= Check other tables.

06 Charger (534446036501)

No.	Item Code	Mark	Item Description	Qty.	Substitute	Note
1	921000200013		Charger24V25A(Aisa-CHN)	1		
1	921000200014		Charger24V25A(Aisa-ENG)	1		
1	921000200015		Charger24V25A(EU)	1		
1	921000200016		Charger24V25A(AUS)	1		
1	921000200017		Charger24V25A(ENG)	1		
1	921000200018		Charger24V25A(USA)	1		
1	921000200595		Charger24V25A(CHE)	1		
1	921000200726		Charger24V25A (USA single-phase 110V)	1		
1	921000200782		Charger24V25A (USA Three-phase 220V)	1		

07 Charger (lithium battery) (534446036502)

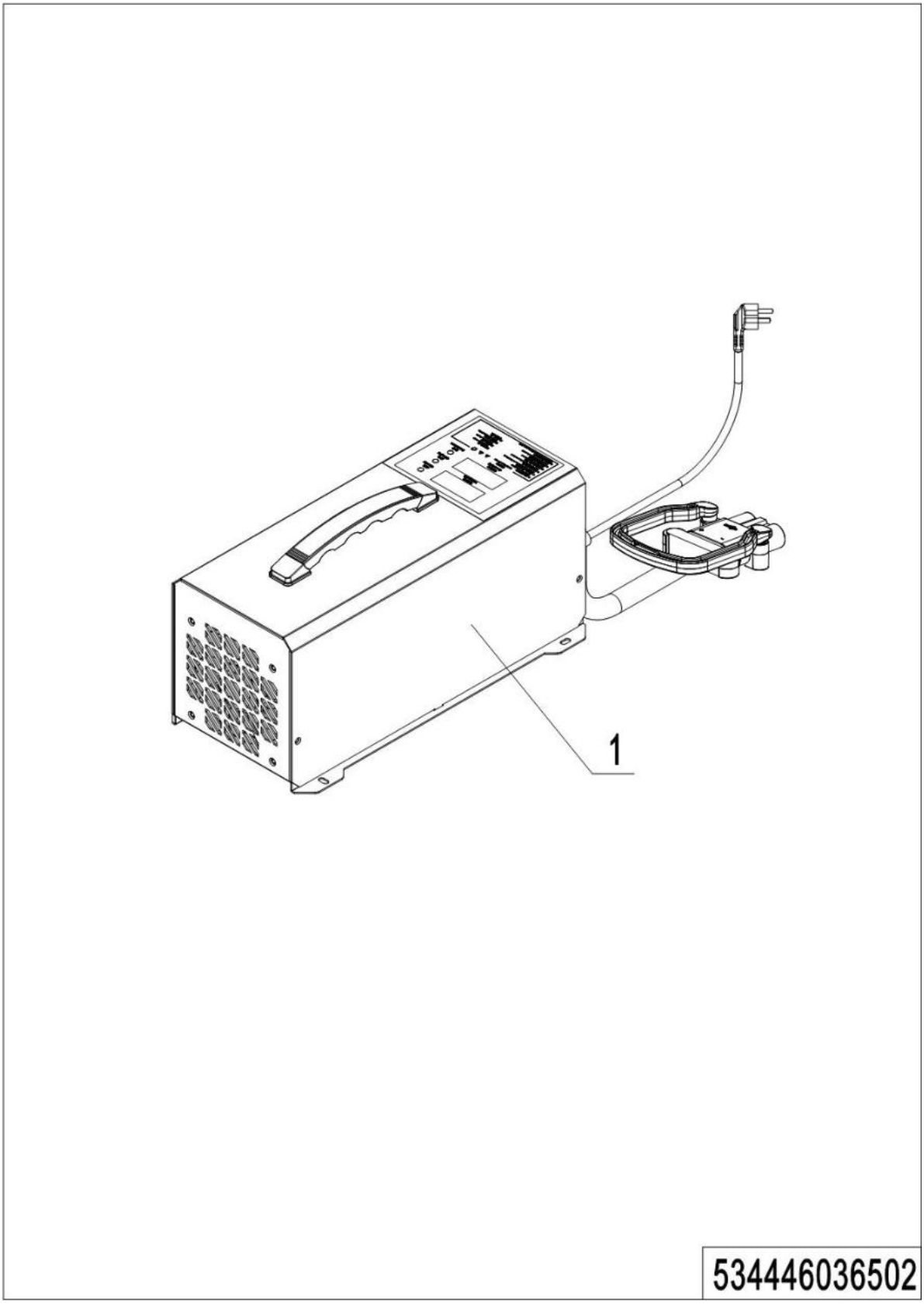

07 Charger (lithium battery) (534446036502)

No.	Item Code	Mark	Item Description	Qty.	Substitute	Note
1	921000200723		Charger24V50A(USA)	1		**REMA**
1	921000200785		Charger24V50A(USA)	1		**Anderson**
1	921000200522		Charger24V60A(Aisa-CHN)	1		
1	921000200523		Charger24V60A(Aisa-ENG)	1		
1	921000200524		Charger24V60A(EU)	1		
1	921000200525		Charger24V60A(ENG)	1		
1	921000200526		Charger24V60A(AUS)	1		
1	921000200527		Charger24V60A(ISR)	1		
1	921000200528		Charger24V60A(ARG)	1		
1	921000200529		Charger24V60A(RSA)	1		**small plug**
1	921000200530		Charger24V60A(USA)	1		**single-phase 110V,REMA**
1	921000200631		Charger24V60A(THA)	1		
1	921000200663		Charger24V60A(RSA)	1		**large plug**
1	921000200724		Charger24V60A(BRA)	1		
1	921000200690		Charger24V60A(USA)	1		**Three-phase 220V,REMA**
1	921000200649		Charger24V60A(Aisa-CHN)	1		

08 Traction Battery (534446037001)

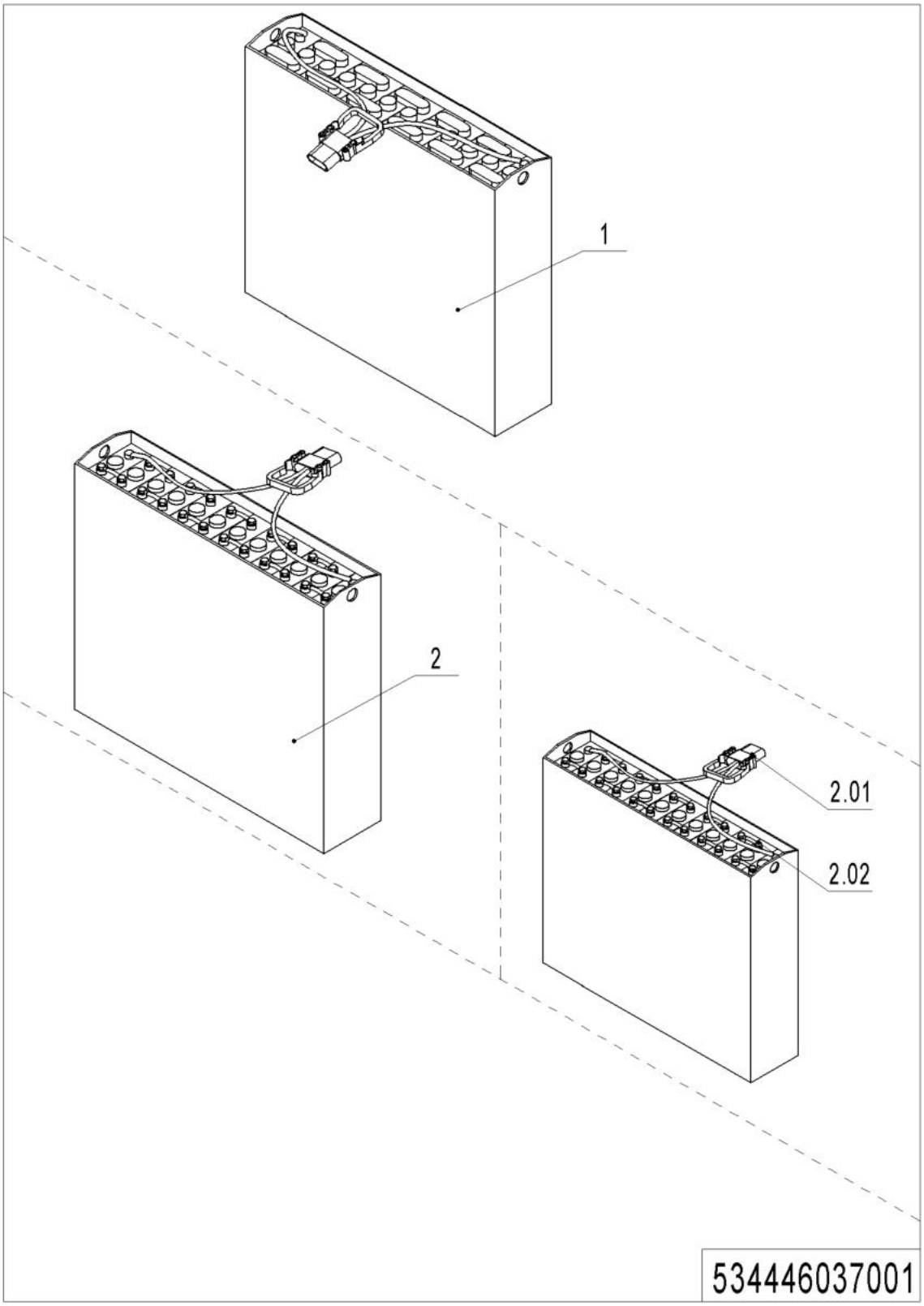

08 Traction Battery (534446037001)

No.	Item Code	Mark	Item Description	Qty.	Substitute	Note
1	534437010000		Battery24V180Ah（welded）	1		
1	920600100516		Battery24V180Ah(welded)	1		EN1175:2020
2	534437010001		Battery24V180Ah	1		
2	534437010003		Battery24V180Ah			
2	920600100536		Battery24V180Ah	1		EN1175:2020
2	920600100592		Battery24V180Ah			EN1175:2020
2.01	920400100007		Connector	1		**For all battery**
2.02	505698520000		Bolt	24		**For bolted battery**

09 Traction Battery (lithium battery) (534446037002)

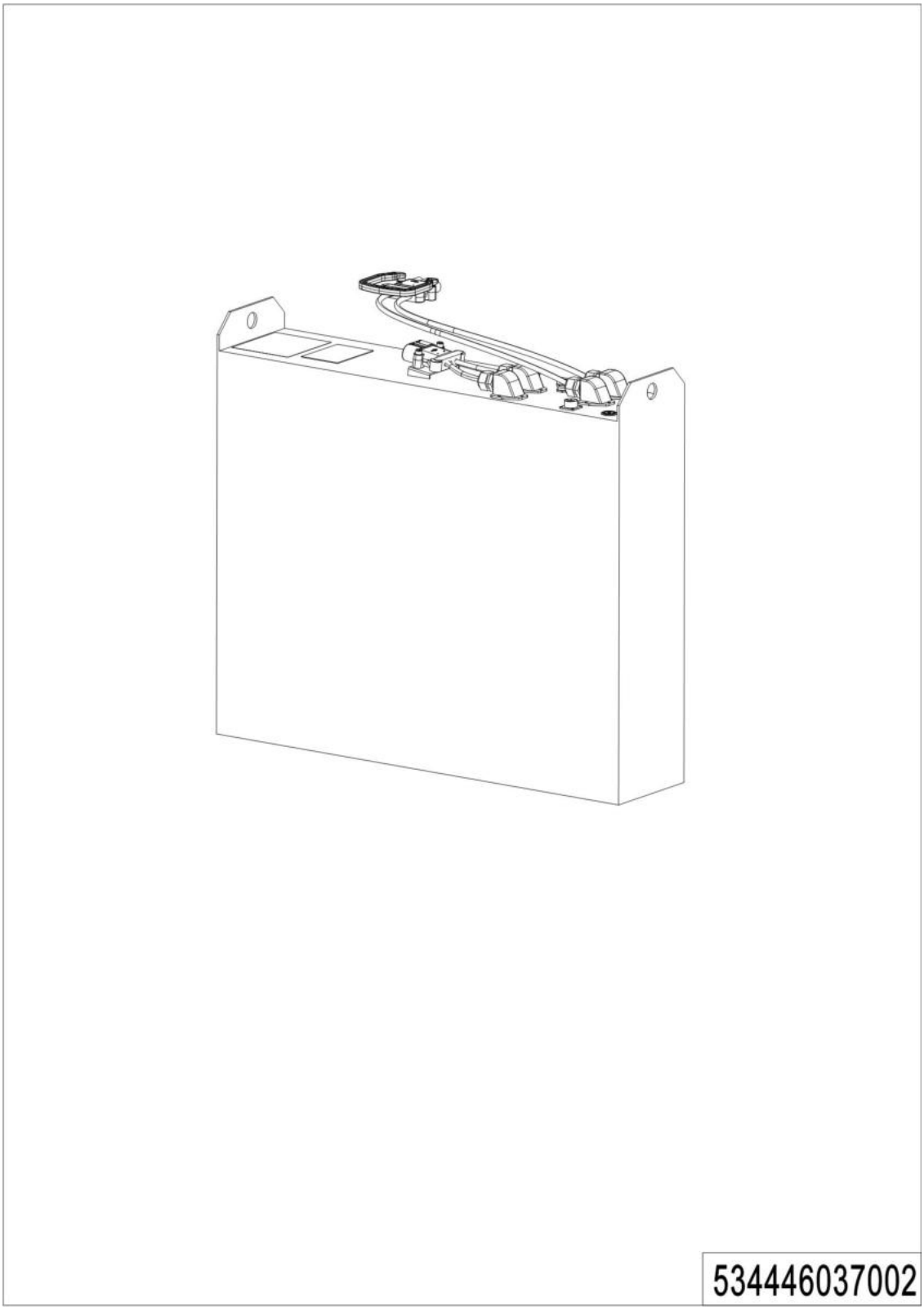

1= Supply as package. 2= Supply with constraints. 3= Phasing-out supply. 4= Supply as assembly. 5= Check other tables.

09 Traction Battery (lithium battery) (534446037002)

No.	Item Code	Mark	Item Description	Qty.	Substitute	Note
1	920600100304		Battery24V100Ah	1		
1	920600100306		Battery24V100Ah	1		

Chapter 7: Special Parts

01 Load Backrest (532646040501)

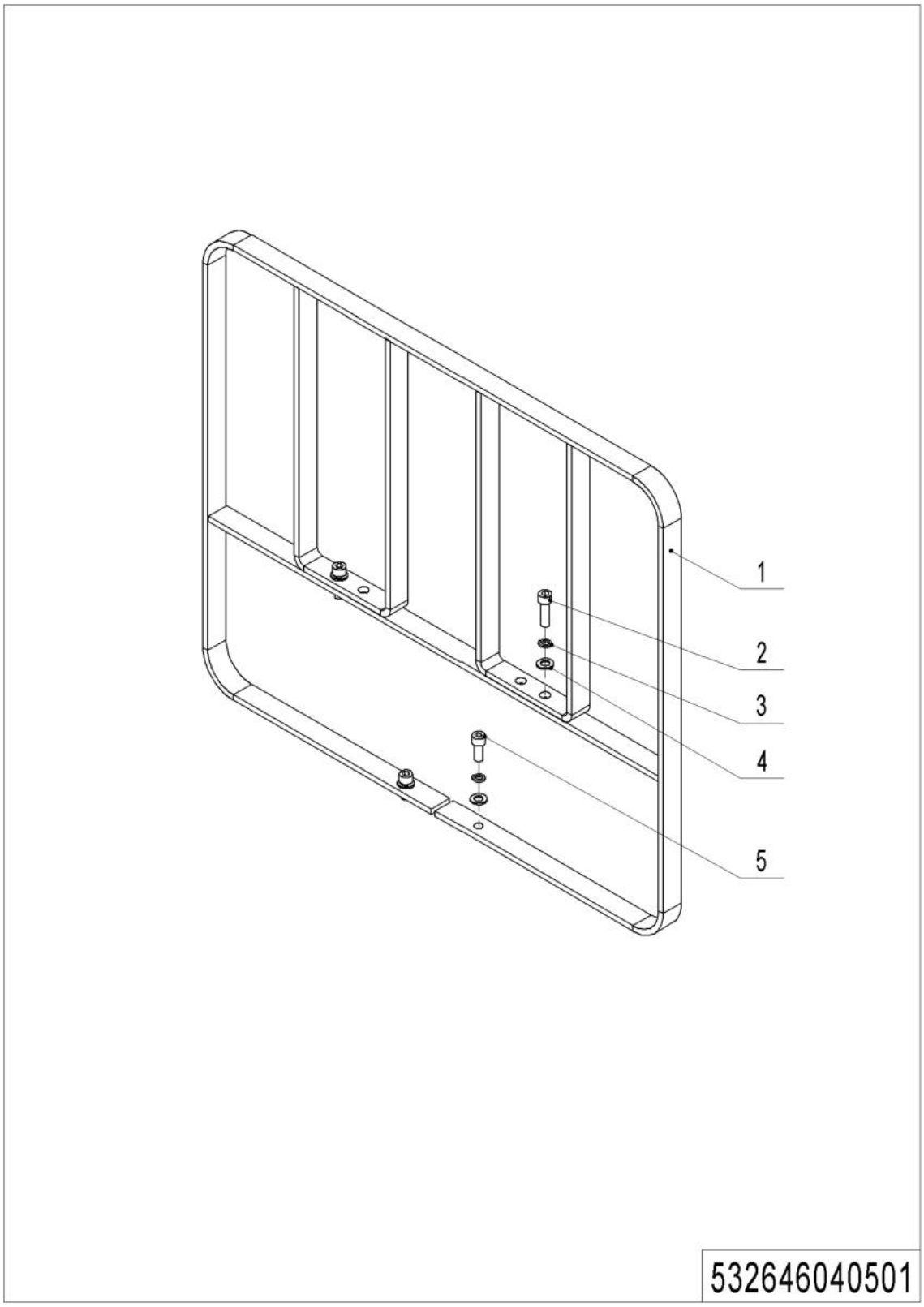

1= Supply as package. 2= Supply with constraints. 3= Phasing-out supply. 4= Supply as assembly. 5= Check other tables.

01 Load Backrest (532646040501)

No.	Item Code	Mark	Item Description	Qty.	Substitute	Note
1	532640510001	2	Load Backrest	1		
2	910200200076	1	Screw	2		
3	910400500007	1	Spring Washer	4		
4	910400100007	1	Flat Washer	4		
5	910200200078	1	Screw	2		

Chapter 8: Others

01 Label and Decal (EU) (534446047001)

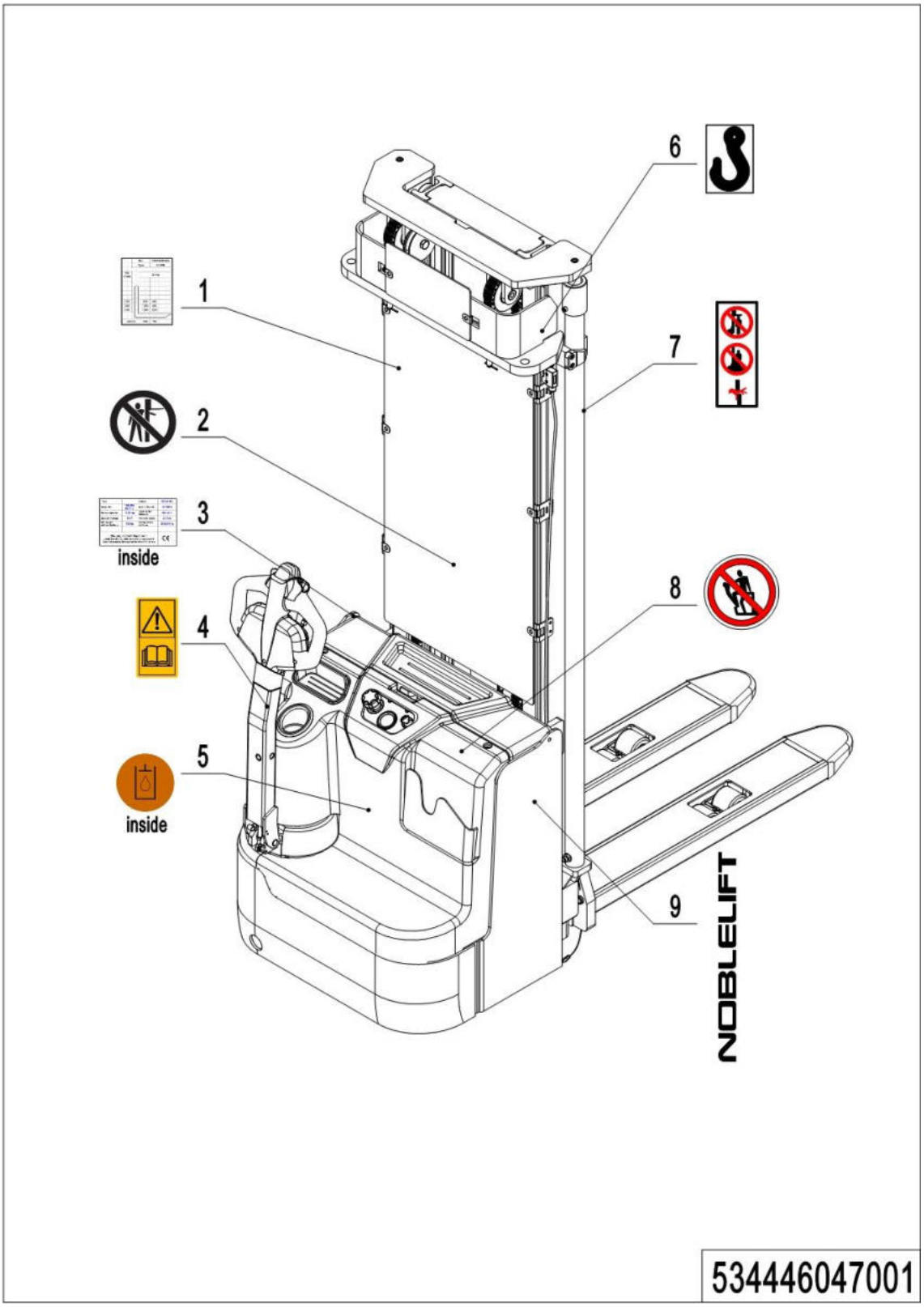

01 Label and Decal (EU) (534446047001)

No.	Item Code	Mark	Item Description	Qty.	Substitute	Note
1	534447520000		Load Capacity Diagram	1		
2	941200100006		Label	1		
3	534447520005		Identification Plat	1		
4	941200300002		Label	1		
5	941200300003		Label	1		
6	941200300001		Label	2		
7	941200100004		Label	2		
8	941200100003		Label	1		
9	941200500001		Label	2		**Special label**

02 Label and Decal (US) (534446047002)

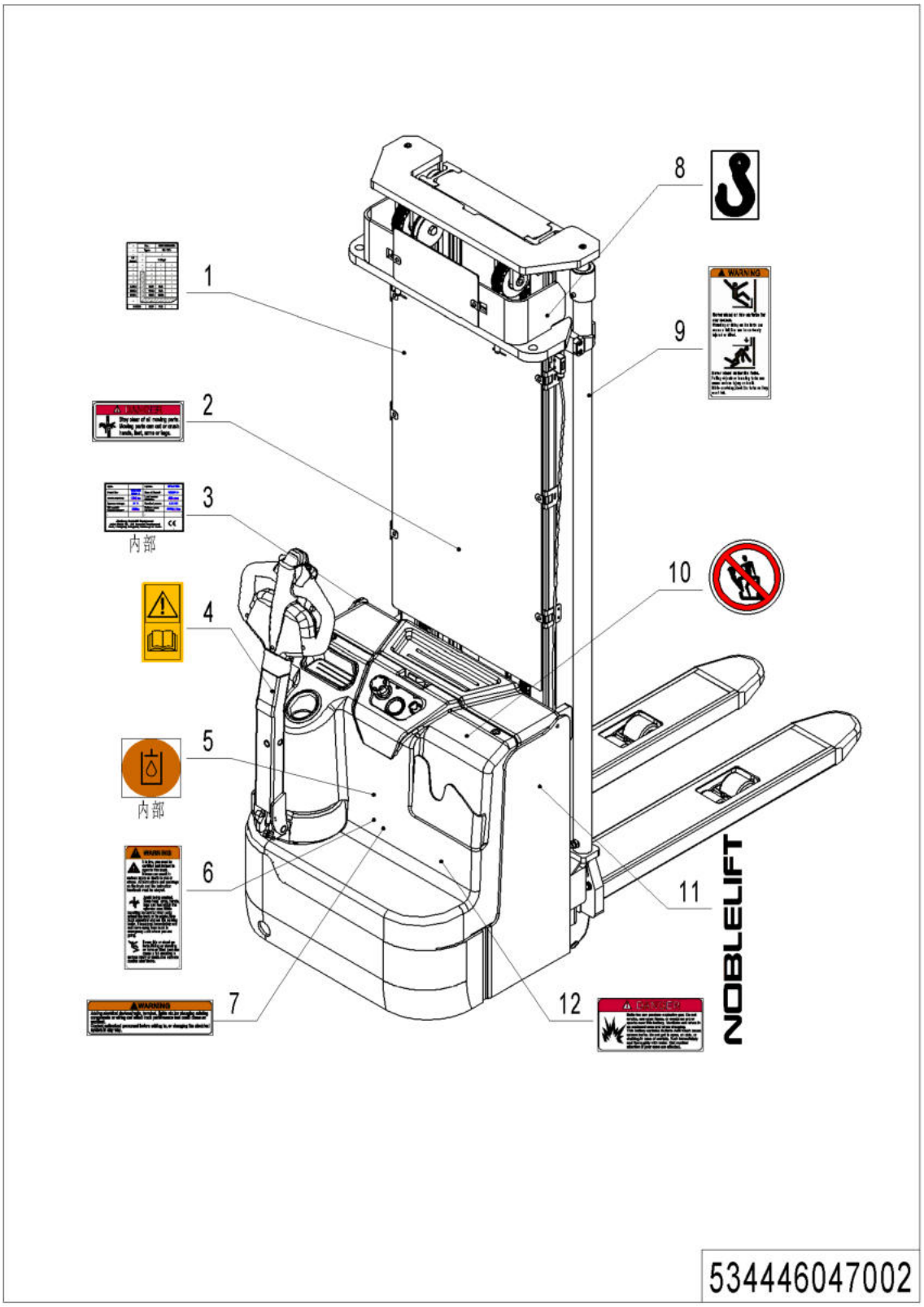

02 Label and Decal (US) (534446047002)

No.	Item Code	Mark	Item Description	Qty.	Substitute	Note
1	534447520000		Load Capacity Diagram	1		
2	941200100014		Label	1		
3	534447520005		Identification Plat	1		
4	941200300002		Label	1		
5	941200300003		Label	1		
6	941200100009		Label	1		
7	941200100010		Label	1		
8	941200300001		Label	2		
9	941200100016		Label	2		
10	941200100011		Label	1		
11	941200500001		Label	2		**Special label**
12	941200100013		Label	1		

Appendix

01 Electrical Circuit Diagram（534733003000）

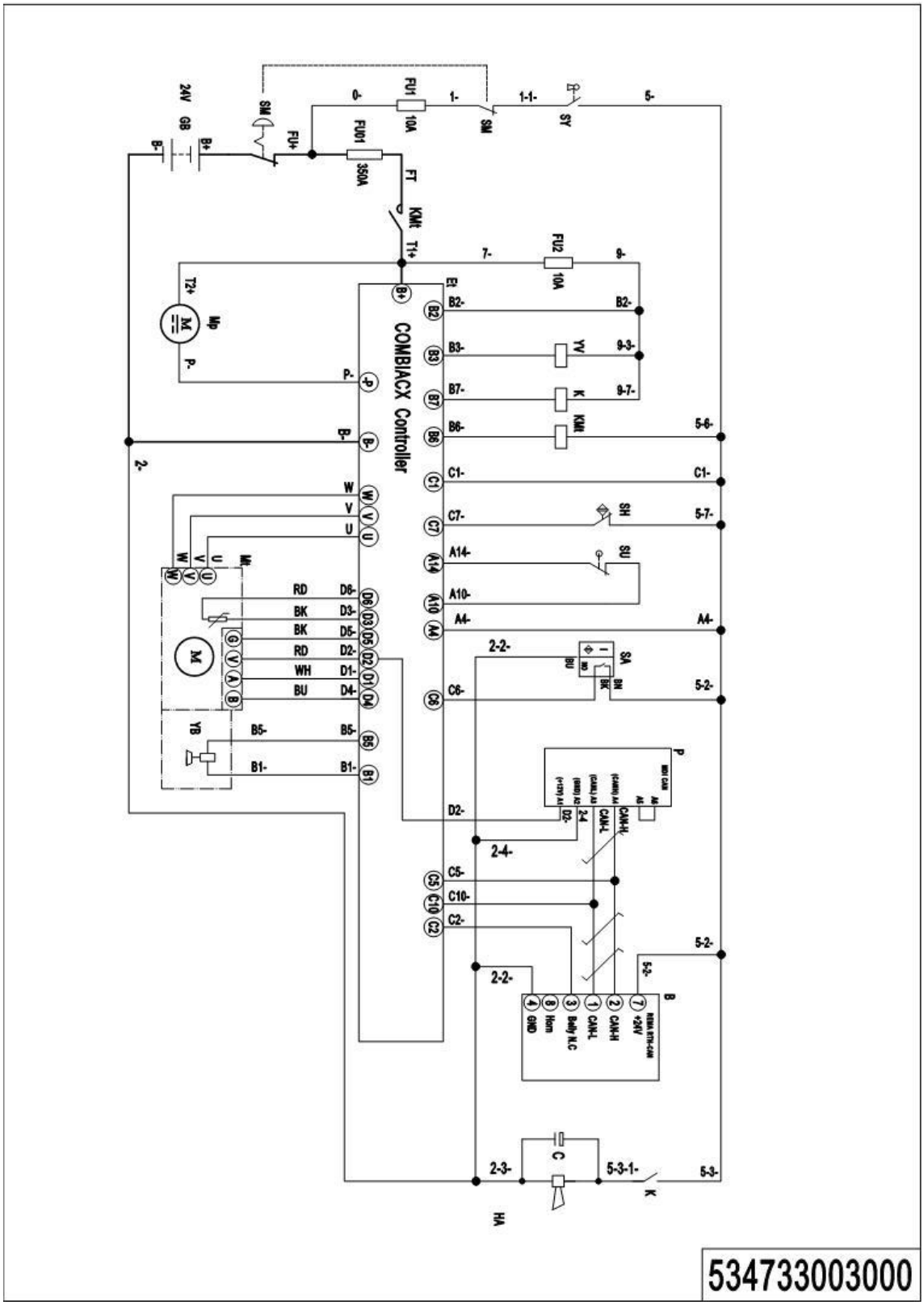

1= Supply as package. 2= Supply with constraints. 3= Phasing-out supply. 4= Supply as assembly. 5= Check other tables.

02 Electrical Circuit Diagram (lithium battery)（534733003003）

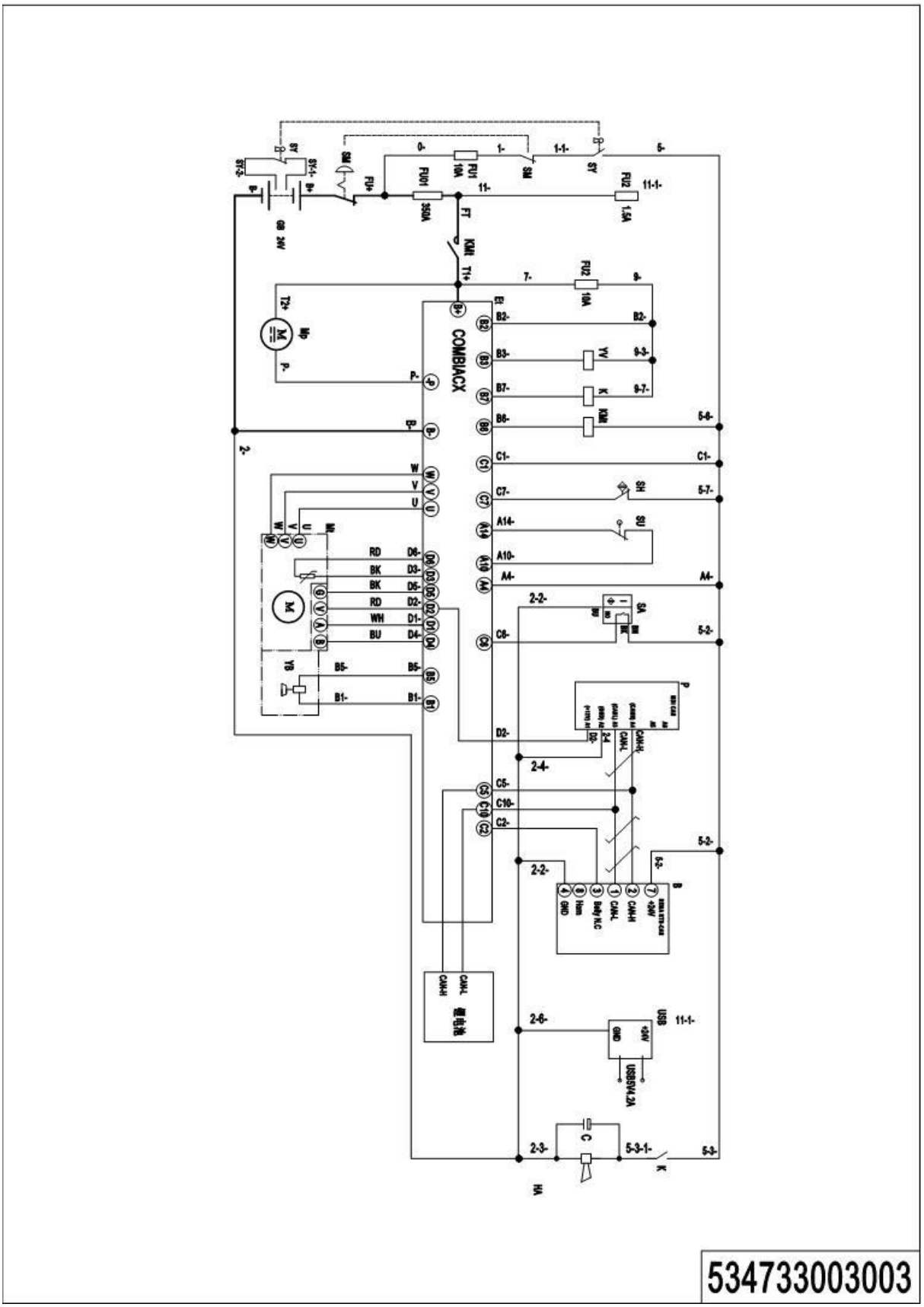

03 Electrical Circuit Diagram(EN1175:2020) (534733003008)

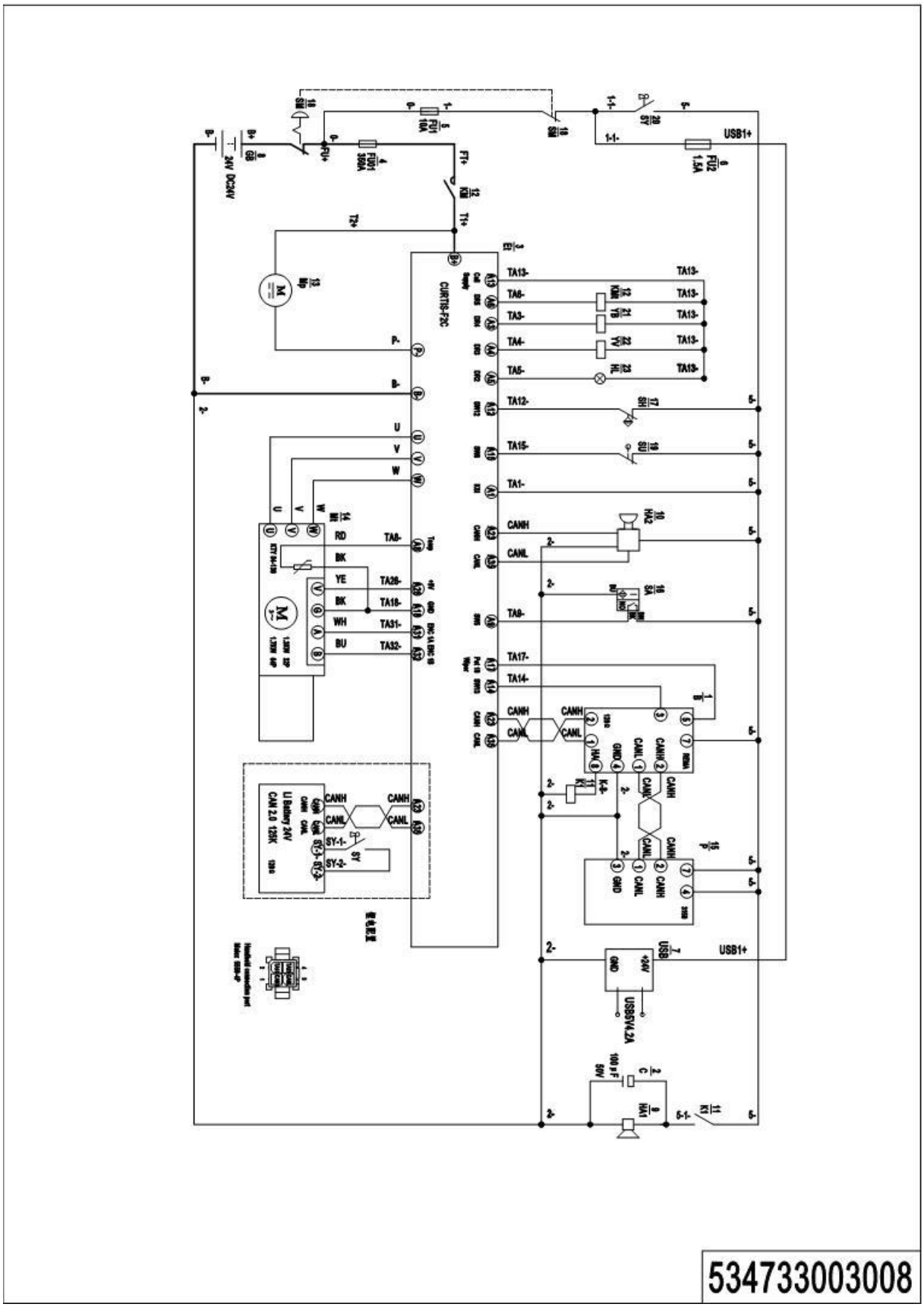

04 Electrical Circuit Diagram (lithium battery)

(EN1175:2020)(534746045504)

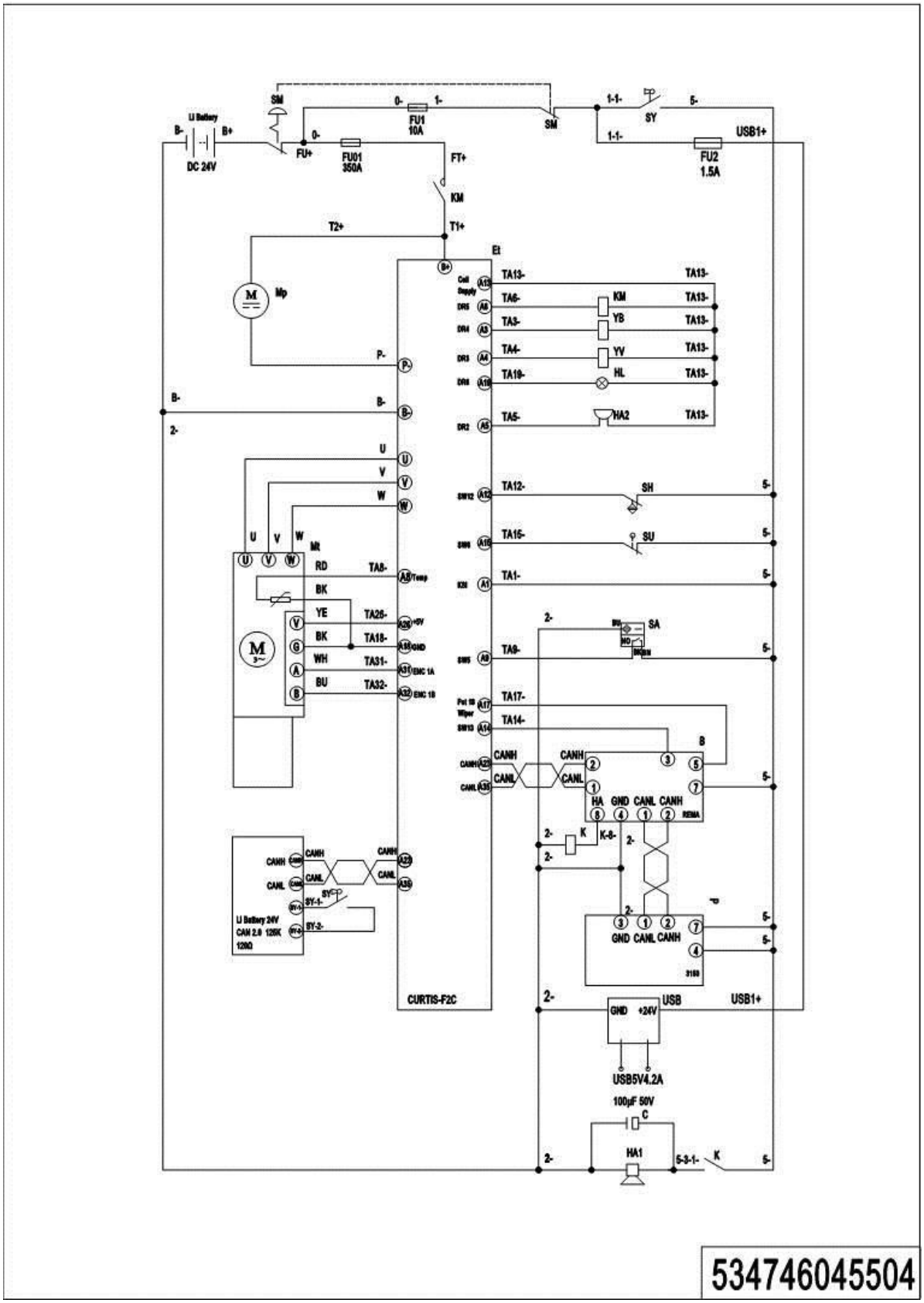

1= Supply as package. 2= Supply with constraints. 3= Phasing-out supply. 4= Supply as assembly. 5= Check other tables.

05 Hydraulic Circuit Diagram (534446045502)

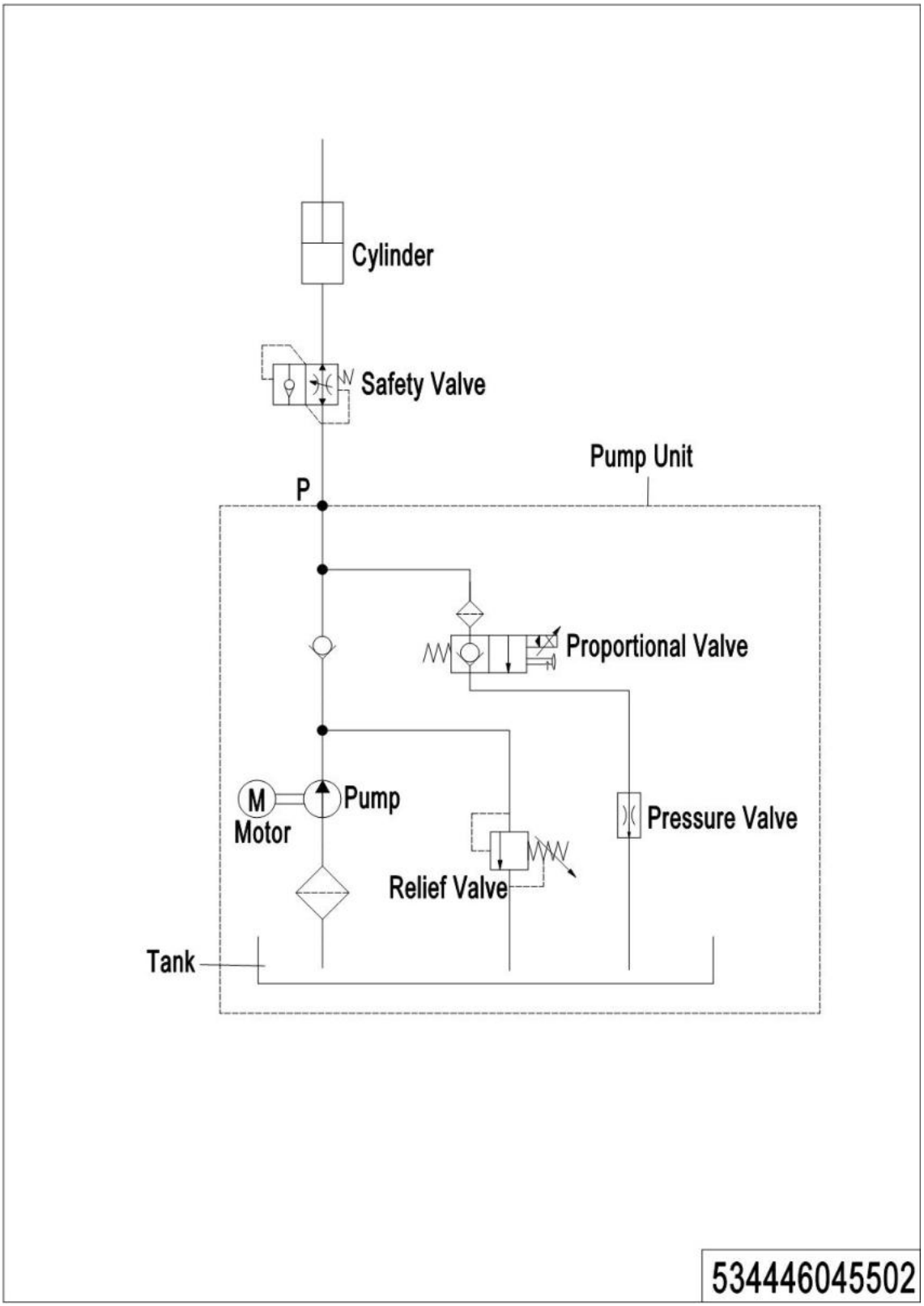

06 Consumable Parts List

No.	Item Code	Item Description	Qty.	Chapter/ Section/ Number
1	940500200005	Bushing	2	Chapter 1/01/8
2	940300400005	WheelΦ230x70	1	Chapter 1/02/6
3	534798520026	Carbon Brush	1	Chapter 2/04/2
4	534498510008	Carbon Brush	1	Chapter 2/03/2
5	940200300002	Compound Roller	4	Chapter 3/02/1
6	534498510002	Seal Kit	1	Chapter 4/01/7.01
7	920200300001	Microswitch	2	Chapter 4/01/17Chapter 4/02/20Chapter 4/03/40
8	535933510005	Switch	2	Chapter 4/01/25Chapter 4/02/30Chapter 4/03/42
9	940200300001	Compound Roller	16	Chapter 4/01/37Chapter 4/02/35Chapter 4/03/59
10	534498510000	Seal Kit	2	Chapter 4/02/12.01
11	534498510001	Seal Kit	1	Chapter 4/02/47.01
12	534798510000	Seal Kit	2	Chapter 4/03/16.01
13	534798510001	Seal Kit	1	Chapter 4/03/57.01
14	505633510002	Proximity Switch	1	Chapter 5/01/13
15	940300300009	WheelΦ84x70	4	Chapter 5/03/1.01
16	910700200019	Bearing	10	Chapter /03/25 Chapter /03/1. 02 Chapter /04/4. 08
17	910700400004	Bearing	2	Chapter 5/04/4.03
18	940300300020	WheelΦ150x54	1	Chapter 5/04/4.07
19	505698520029	Button	1	Chapter 6/01/1.02 Chapter 6/02/1.02
20	920100300001	Fuse	1	Chapter 6/04/9
21	920100100013	Fuse	1	Chapter 6/03/12 Chapter 6/05/17
22	920100200002	Fuse	1	Chapter 6/03/15 Chapter 6/05/14

1= Supply as package. 2= Supply with constraints. 3= Phasing-out supply. 4= Supply as assembly. 5= Check other tables.