Print Number: Print Date:

NOBLELIFT

Scan QR Code for More

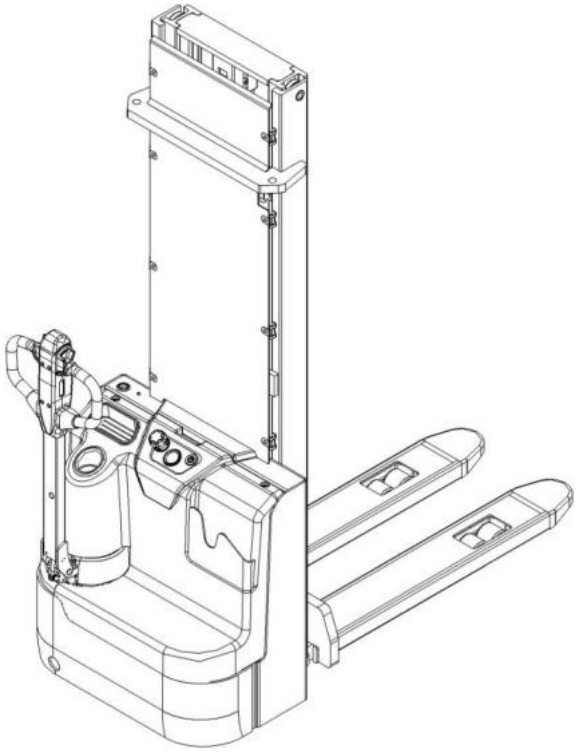

Electric Pallet Stacker ECL15B/ECL15N

PARTS MANUAL

531846020101

Version V01

Truck Identification Number From:

Parts Manual ECL15B/ECL15N -PM01EN

Please order parts from authorized dealers of Noblelift Intelligent Equipment Co., LTD.

In order to avoid wrong delivery, all the orders for spare parts should specify the following items:

- Truck model, identification number and manufacture year.
- Orders for spare parts of mast, hydraulic transmission unit, steering axle, motor, etc. shall indicate the manufacture number of these parts.
- Codes for Noblelift spare parts are shown in the table of parts manual. Please also pay attention to the description of supply status, order quantity, etc. (check the number listed in "Mark" column of the parts manual).

"Mark" Column:

The unmarked indicates the parts are in short supply cycle.

Number 1: supply as package. Indicating these that parts are small parts and seal parts, which are supplied in package unit and in short supply cycle.

Number 2: supply with constraints. Indicating that these spare parts are not in stock and will be prepared for production after receiving the order from customers, which are in long supply cycle.

Number 3: phasing-out supply. Indicating that these parts will be replaced by new parts due to technical improvements and the current stock will not be available when these parts run out. Please check the description of technical improvements notice.

Number 4: supply as assembly. Indicating that these parts are assembly parts defined by manufacture process, which cannot be supplied as a single part.

Number 5: check other tables.

This parts manual is the property of Noblelift and can be shared under the confidential agreement only, Noblelift has the right to claim for compensation of any unauthorized use. Copy without permission is not allowed. Figures in the manual are not limited by the original design. Noblelift Intelligent Equipment Co., LTD reserves the right to improve the products for continuous technology progress.

Table of Contents

Chapter 1: Drive System....4
01 Drive Assembly (531846013501)....4
01 Drive Assembly (531846013501) Continuation....6
02 Drive Unit (508546013001)....8
Chapter 2: Hydraulic System....10
01 Hydraulic Components (531846024001)....10
01 Hydraulic Components (531846024001) Continuation....12
02 Hydraulic Unit (531846024002)....14
Chapter 3: Truck Frame....16
01 Fork Carriage (531846038001)....16
02 Chassis (Two Stage Mast) (531846021501)....18
02 Chassis (Two Stage Mast) (531846021501) Continuation....20
03 Chassis (Single Stage Mast) (531846021502)....22
03 Chassis (Single Stage Mast) (531846021502) Continuation....24
Chapter 4: Steering System, Braking System, Wheels....26
01 Tiller Unit (531846011001)....26
02 Control Handle (534346011002)....28
03 Load Wheel (Tandem Rollers) (531846017001)....30
04 Load Roller(Single Roller)（537046017001）....32
05 Caster (532246016501)....34
Chapter 5: Electrical Parts....36
01 Wire Harness (531802033001)....36
01 Wire Harness (531802033001) Continuation....38
02 Display Assembly (531846010001)....40
03 Traction Battery (531846037001)....42
Chapter 6: Special Equipment....44
01 Load Backrest (532646040501)....44
Chapter7: Others....46
01 Label and Decal (531846047001)....46
02 Label and Decal (USA) (531846047002)....48
Appendix....50
01 Electrical Circuit Diagram (ECL15B)....50
02 Electrical Circuit Diagram (ECL15N)....51
03 Hydraulic Circuit Diagram....52
04 Consumable Parts List....53

Chapter 1: Drive System

01 Drive Assembly (531846013501)

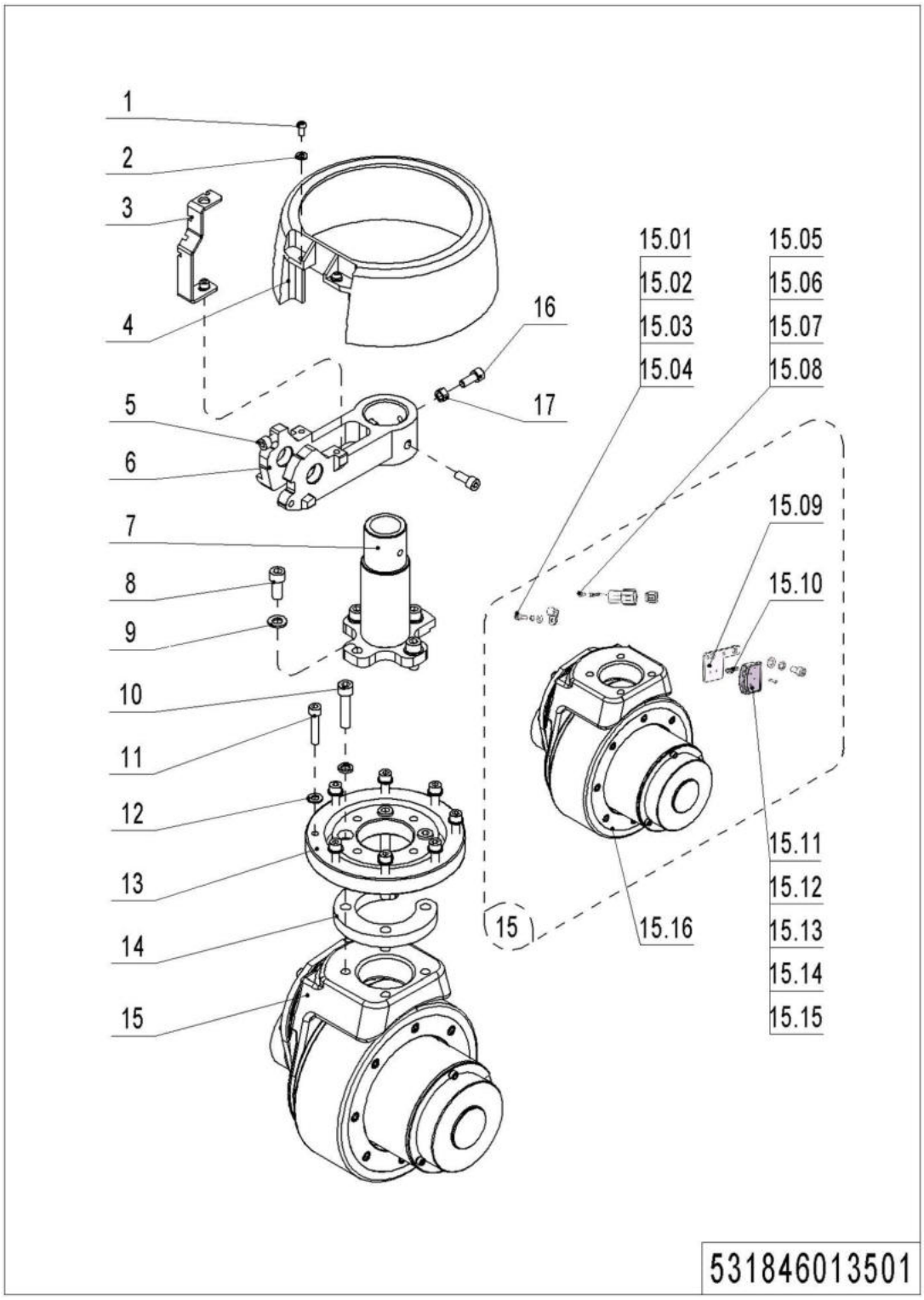

1= Supply as package. 2= Supply with constraints. 3= Phasing-out supply. 4= Supply as assembly. 5= Check other tables.

01 Drive Assembly (531846013501)

No.	Item Code	Mark	Item Description	Qty.	Substitute	Note
1	910200200033	1	Screw	2		
2	910400100005	1	Flat Washer	2		
3	531813520008	2	Fixing Mount	1		
4	531813520004	2	Protective Cover	1		
5	910200200055	1	Screw	2		
6	531813520003	2	Bracket	1		
7	531813510000	2	Axle	1		
8	910200200076	1	Screw	4		
9	910400500007	1	Spring Washer	8		
10	910200200080	1	Screw	4		
11	910200200061	1	Screw	8		
12	910400100006	1	Flat Washer	9		
13	532213520001	2	Slewing Bearing	1		
14	531813520005	2	Plate	1		
15	508598510017	2	Drive Kits	1		INTORQ
15	508598510018	2	Drive Kits	1		RXD
15.01	921300200001	2	Cable Clamp	1		
15.02	910200200012	1	Screw	1		
15.03	910400500003	1	Spring Washer	1		
15.04	910400100003	1	Flat Washer	1		
15.05	920400200003	2	Connector	1		
15.06	920400200004	2	Connector	1		
15.07	920400200017	2	Connector	2		
15.08	920400200018	2	Connector	2		
15.09	508513520003	2	Mounting Plate	1		
15.10	920400200161	2	Connector	3		
15.11	920400200160	2	Connector	1		
15.12	910200500012	1	Screw	2		
15.13	910200200033	1	Screw	2		

01 Drive Assembly (531846013501) Continuation

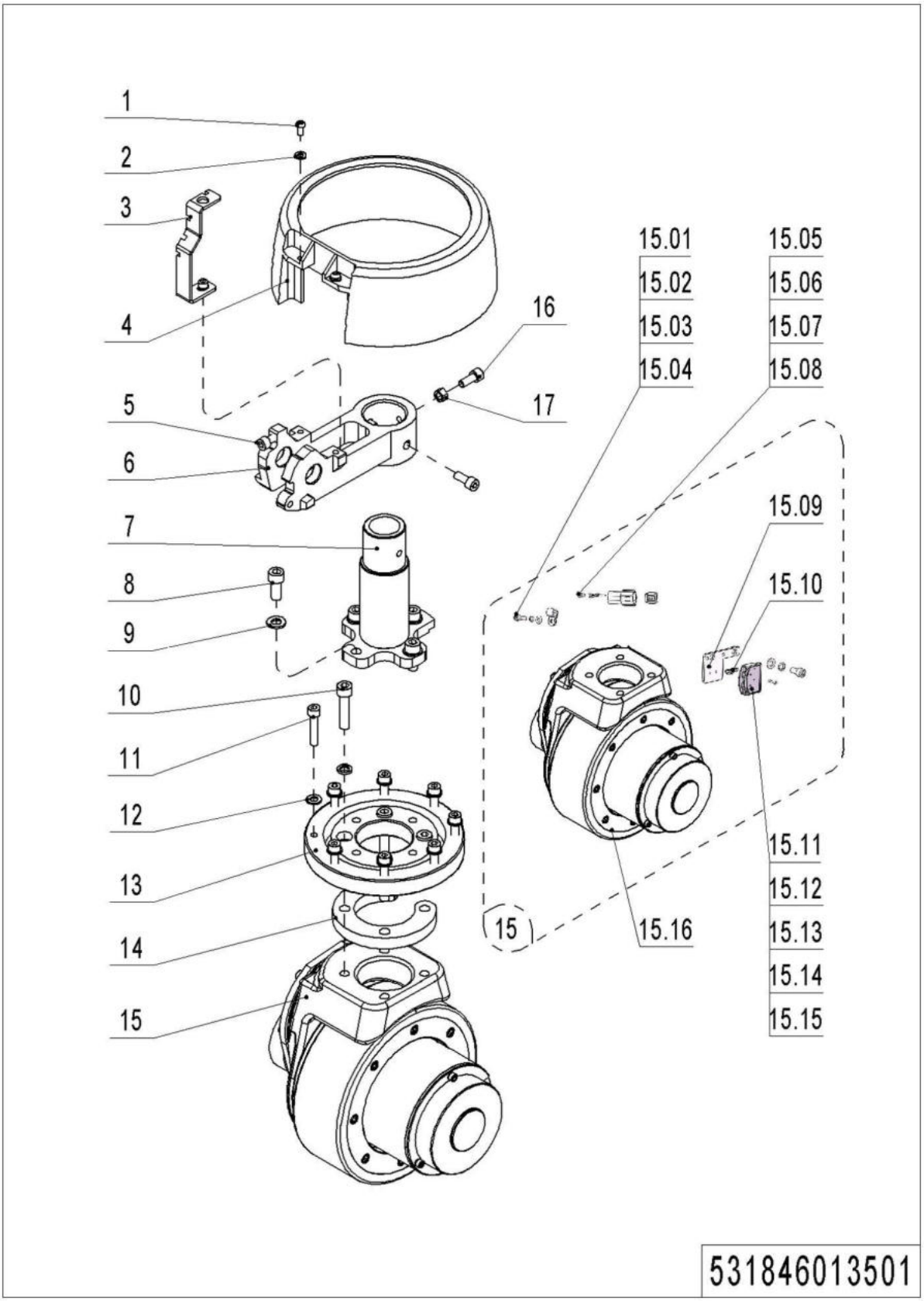

01 Drive Assembly (531846013501) Continuation

No.	Item Code	Mark	Item Description	Qty.	Substitute	Note
15.14	910400500005	1	Spring Washer	2		
15.15	910400100005	1	Flat Washer	2		
15.16	----------	5	Drive Unit	1		Check 508546013001
16	910200200057	1	Screw	3		
17	910300100006	1	Nut	1		

02 Drive Unit (508546013001)

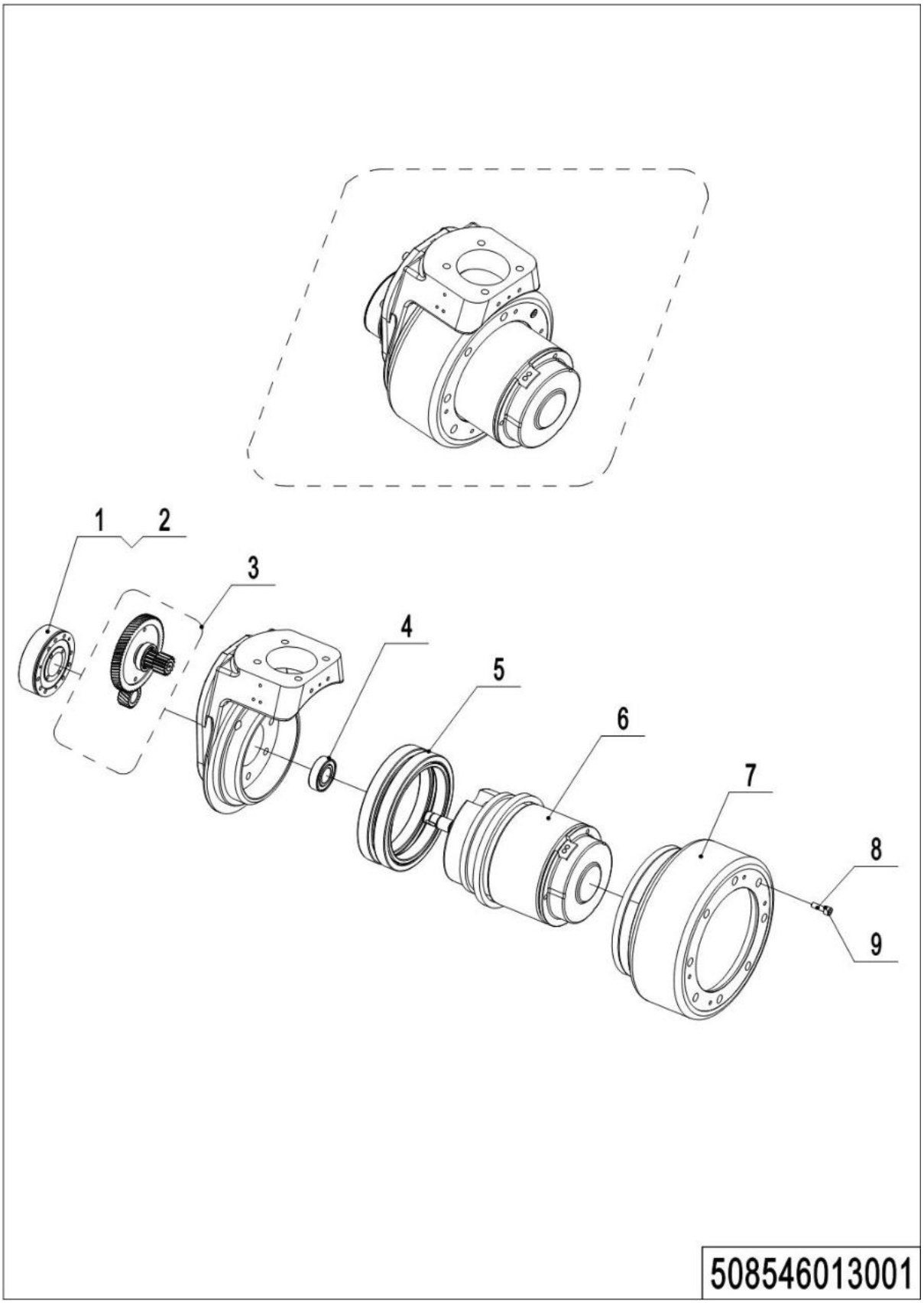

1= Supply as package. 2= Supply with constraints. 3= Phasing-out supply. 4= Supply as assembly. 5= Check other tables.

02 Drive Unit (508546013001)

No.	Item Code	Mark	Item Description	Qty.	Substitute	Note
--	940900100011	2	Drive Unit	1		INTORQ
--	940900100021	2	Drive Unit	1		RXD
1	940700100006	2	Brake	1		INTORQ
1	961000800001	2	Brake	1		RXD
2	508098520040	2	Rubber Strip	1		
3	508098510015	2	Gear Components	1		
4	910700200004	2	Bearing	1		
5	508098520011	2	Gear Ring	1		
6	508098510016	2	Motor	1		
7	508098520003	2	Wheel	1		
8	910200200036	1	Screw	8		
9	910400500005	1	Spring Washer	8		

Chapter 2: Hydraulic System

01 Hydraulic Components (531846024001)

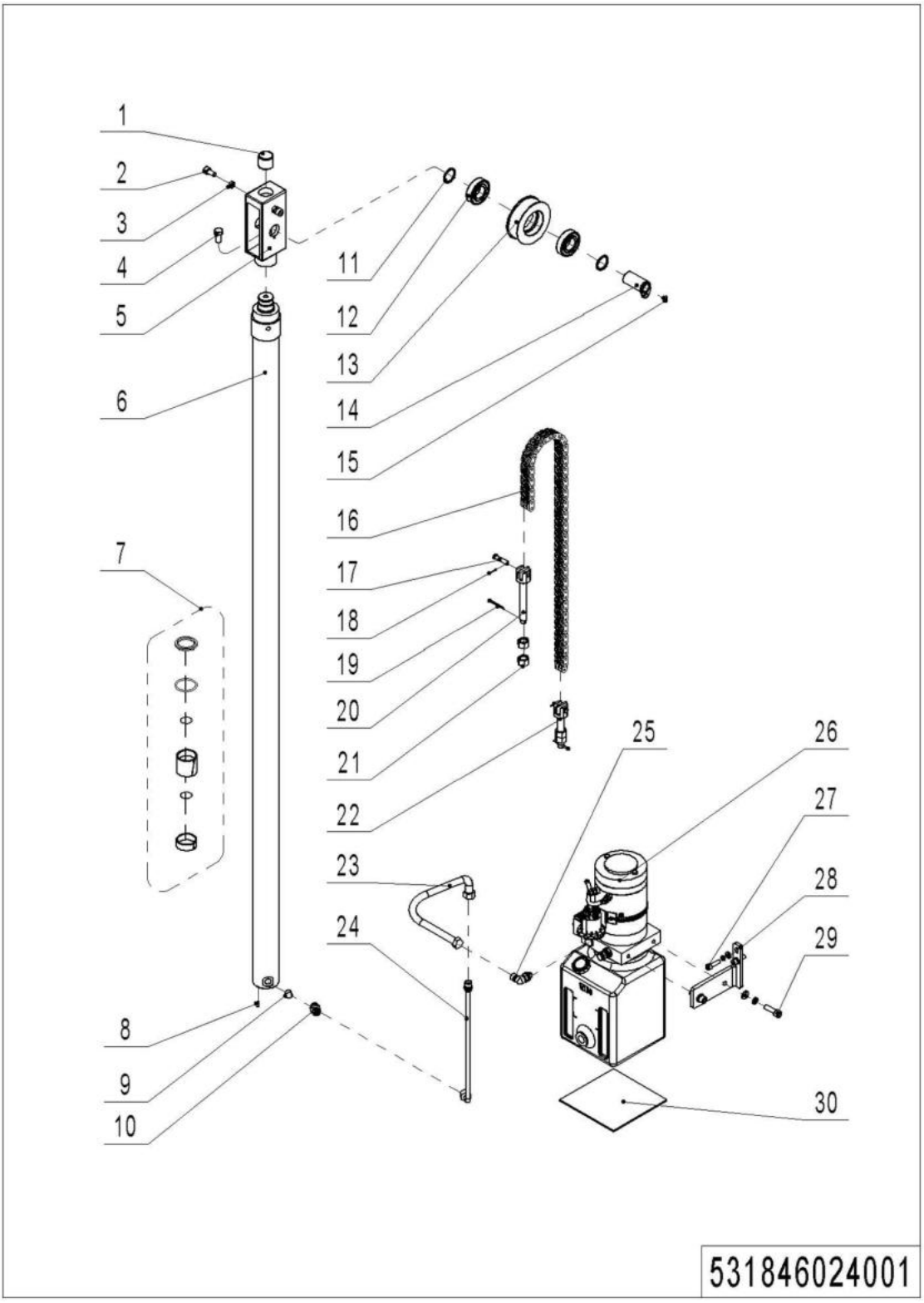

1= Supply as package. 2= Supply with constraints. 3= Phasing-out supply. 4= Supply as assembly. 5= Check other tables.

01 Hydraulic Components (531846024001)

No.	Item Code	Mark	Item Description	Qty.	Substitute	Note
1	532644020094	2	Crash Pad	1		
2	910200200075	1	Screw	2		
3	910300300005	1	Nut	2		
4	910100300049	1	Bolt	1		
5	531821520028	2	Yoke	1		
6	531821510015	2	Cylinder	1		Lift Height 1600
6	531821510016	2	Cylinder	1		Lift Height 2000
6	532644010031	2	Cylinder	1		Lift Height 2900
6	532644010037	2	Cylinder	1		Lift Height 3200
6	532644010041	2	Cylinder	1		Lift Height 3600
7	532698510001		Seal Kit	1		
8	910600400020	1	Spring Pin	1		
9	950600300001	2	Safety Valve	1		
10	950400400003	2	Joint	1		
11	940600500008	2	Washer	2		
12	910700200021	1	Bearing	2		
13	940200400003	2	Sprocket	1		
14	532644010035	2	Pin	1		
15	910200400014	1	Screw	1		
16	532643510087	2	Chain	1		Lift Height 1600
16	531821510014	2	Chain	1		Lift Height 2000
16	532644010083	2	Chain	1		Lift Height 2900
16	532644010084	2	Chain	1		Lift Height 3200
16	532644010085	2	Chain	1		Lift Height 3600
17	941100800008	1	Pin	2		
18	910600600015	1	Cotter Pin	2		
19	910600600037	1	Cotter Pin	2		
20	532643520137	2	Chain Anchor	1		Two Stage Mast
21	910300200008	1	Nut	4		
22	532643520137	2	Chain Anchor	1		Lift Height 2000

1= Supply as package. 2= Supply with constraints. 3= Phasing-out supply. 4= Supply as assembly. 5= Check other tables.

01 Hydraulic Components (531846024001) Continuation

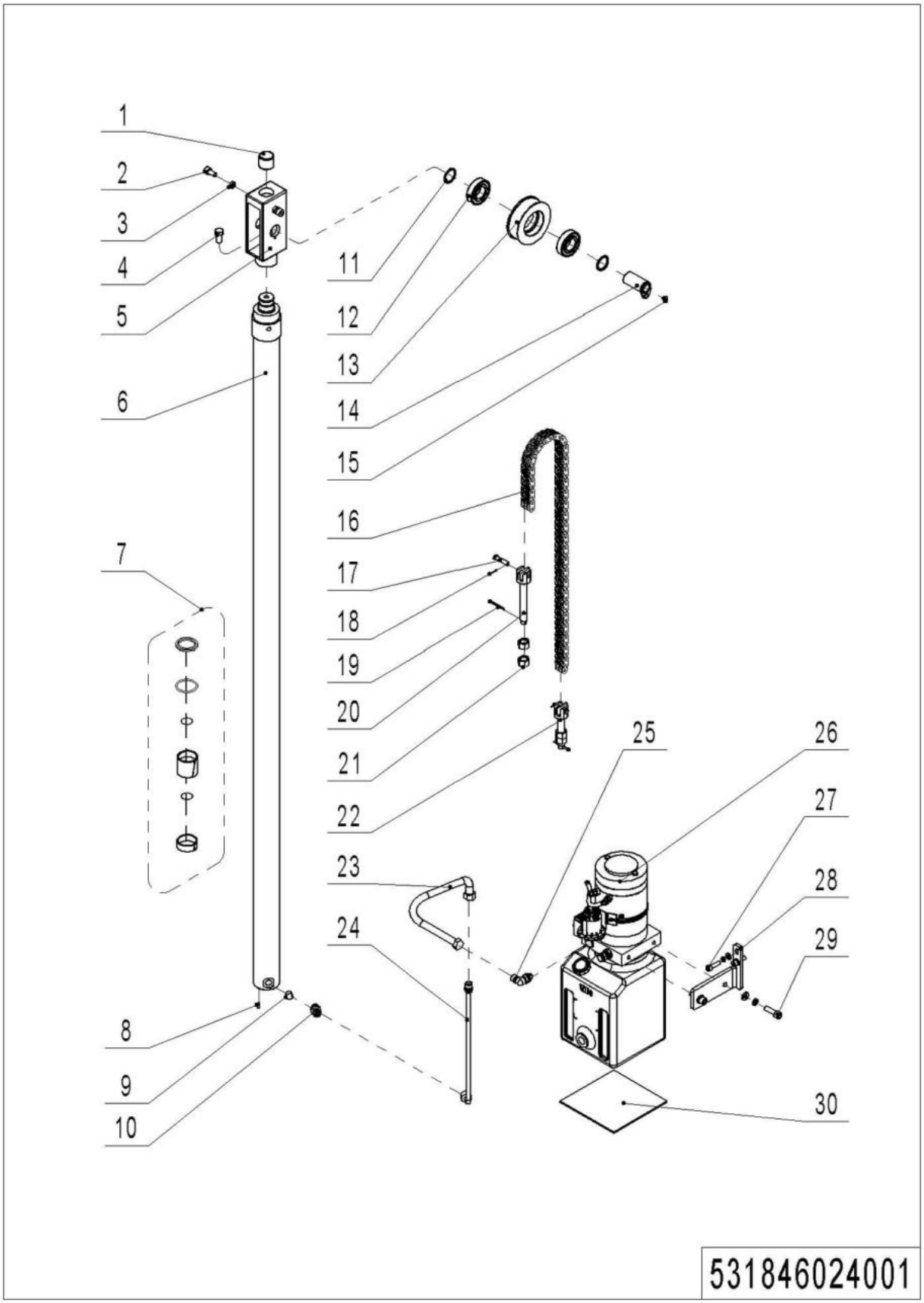

1= Supply as package. 2= Supply with constraints. 3= Phasing-out supply. 4= Supply as assembly. 5= Check other tables.

01 Hydraulic Components (531846024001) Continuation

No.	Item Code	Mark	Item Description	Qty.	Substitute	Note
22	532644020096	2	Chain Anchor	1		Others
23	532424010001	2	Hose	1		
24	531824010003	2	Steel Tube	1		
25	950401100008	2	Joint	1		
26	----------	5	Pump Unit	1		Check 531846024002
27	910200200059	1	Screw	2		
28	531824020003	2	Mounting Plate	1		
29	910200200076	1	Screw	2		
30	531837020012	2	Crash Pad	1		

1= Supply as package. 2= Supply with constraints. 3= Phasing-out supply. 4= Supply as assembly. 5= Check other tables.

02 Hydraulic Unit (531846024002)

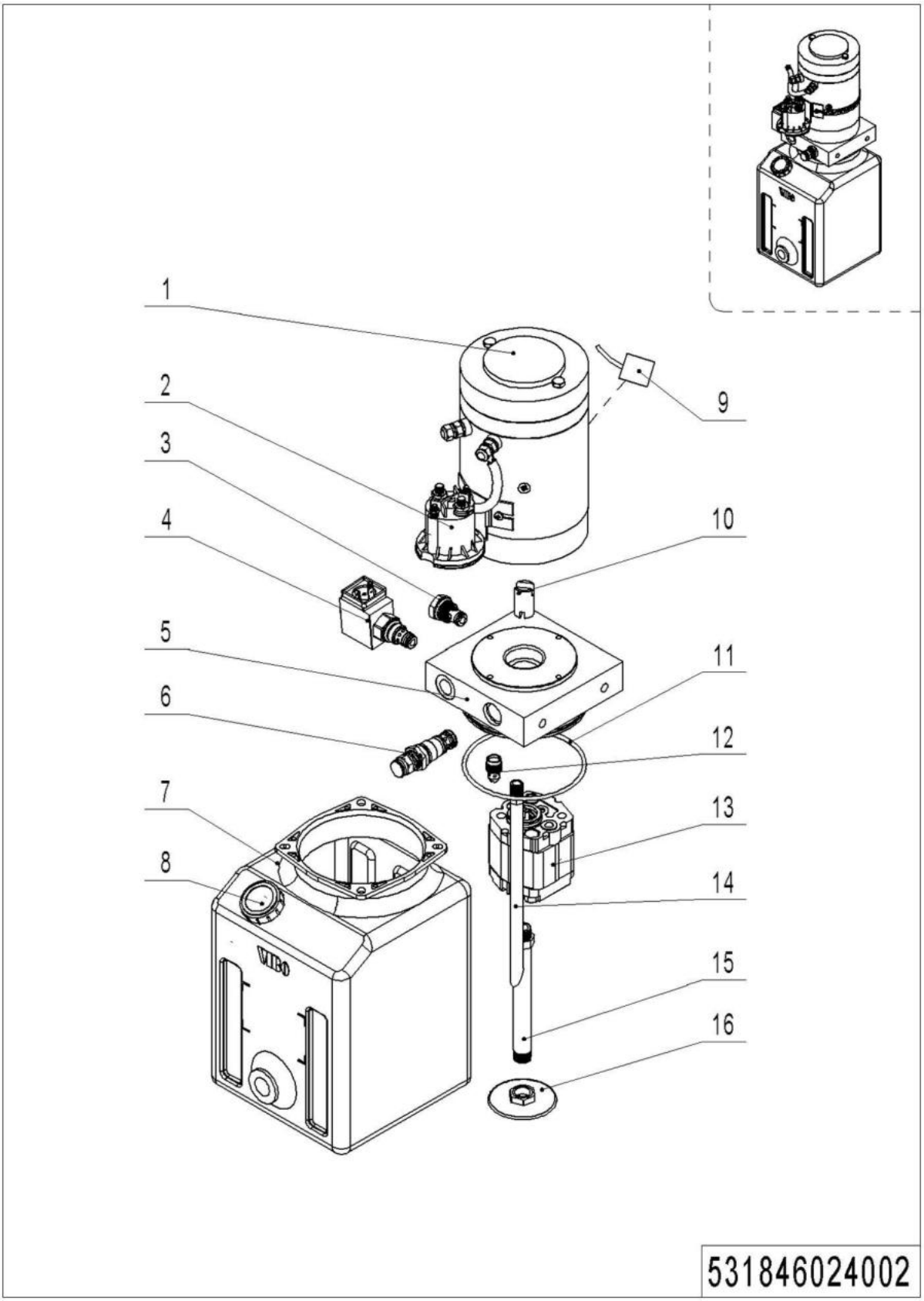

1= Supply as package. 2= Supply with constraints. 3= Phasing-out supply. 4= Supply as assembly. 5= Check other tables.

02 Hydraulic Unit (531846024002)

No.	Item Code	Mark	Item Description	Qty.	Substitute	Note
--	950900100068	2	Pump Unit	1		
1	531898520013	2	Motor	1		
2	531898520004	2	Switch	1		
3	532098510003	2	Check Valve	1		
4	531898520005	2	Magnetic Valve	1		
5	531898520011	2	Valve Block	1		
6	402698520018	2	Overflow Valve	1		
7	531898520007	2	Tank	1		
8	531898520006	2	Cap-Tank	1		
9	531898520014		Carbon Brush	4		
10	531898520012	2	Coupling	1		
11	910800100088	2	O-Ring	1		
12	402698520015	2	Valve	1		
13	531898520010	2	Gear Pump	1		
14	531898520009	2	Pipe	1		
15	531898520008	2	Oil Tube	1		
16	402698520010	2	Filter	1		

Chapter 3: Truck Frame

01 Fork Carriage (531846038001)

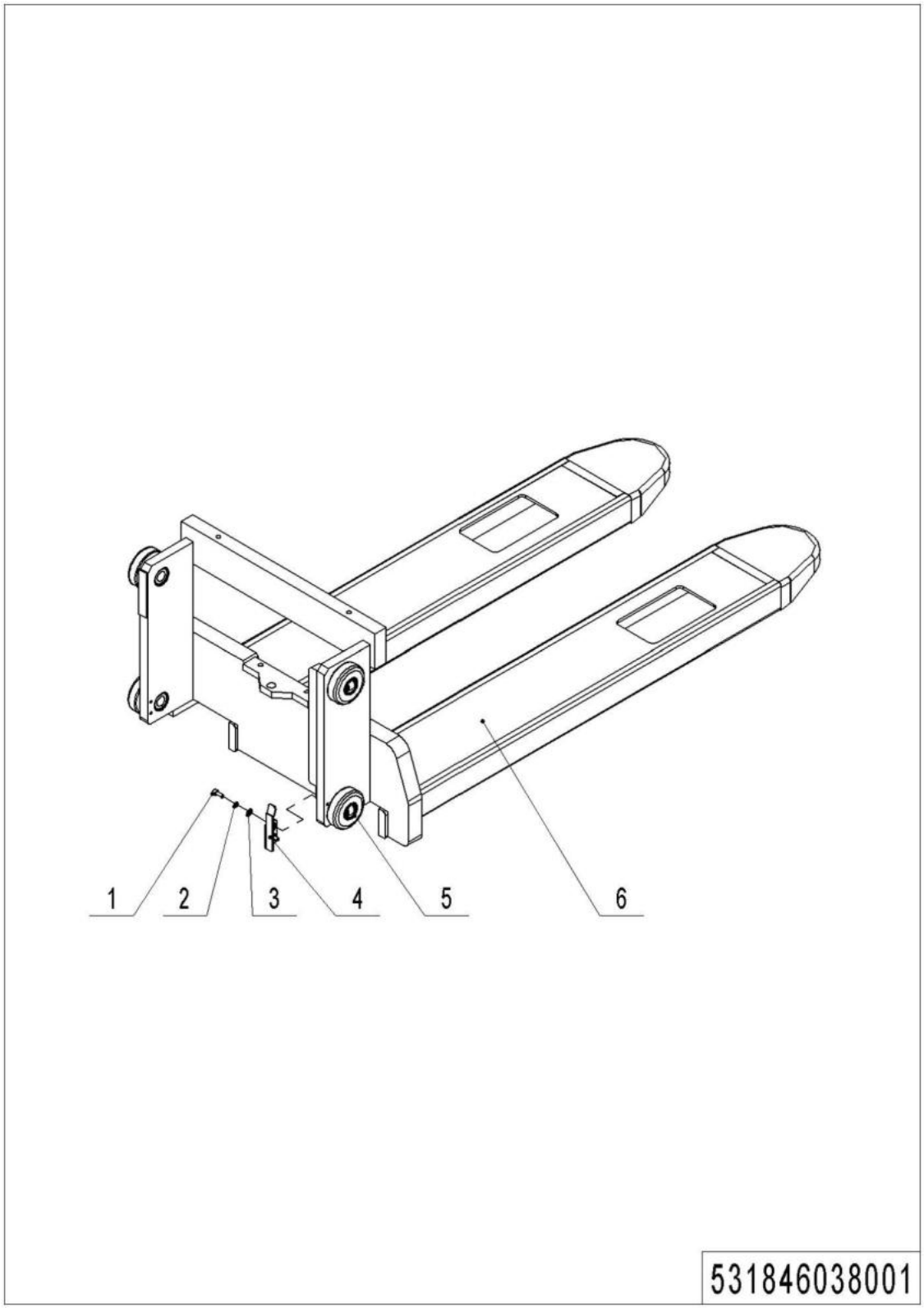

1= Supply as package. 2= Supply with constraints. 3= Phasing-out supply. 4= Supply as assembly. 5= Check other tables.

01 Fork Carriage (531846038001)

No.	Item Code	Mark	Item Description	Qty.	Substitute	Note
1	910200200035	1	Screw	2		Single mast
2	910400500005	1	Spring Washer	2		Single mast
3	910400100005	1	Flat Washer	2		Single mast
4	531838020010	2	Stop Plate	1		Single mast
5	940200300008		Compound Roller	4		
6	531838010002	2	Fork(,570x1150)	1		Single mast
6	531838010003	2	Fork(,685x1150)	1		Single mast
6	531838010000	2	Fork(570x1150)	1		Two-stage mast
6	531838010001	2	Fork(685x1150)	1		Two-stage mast

02 Chassis (Two Stage Mast) (531846021501)

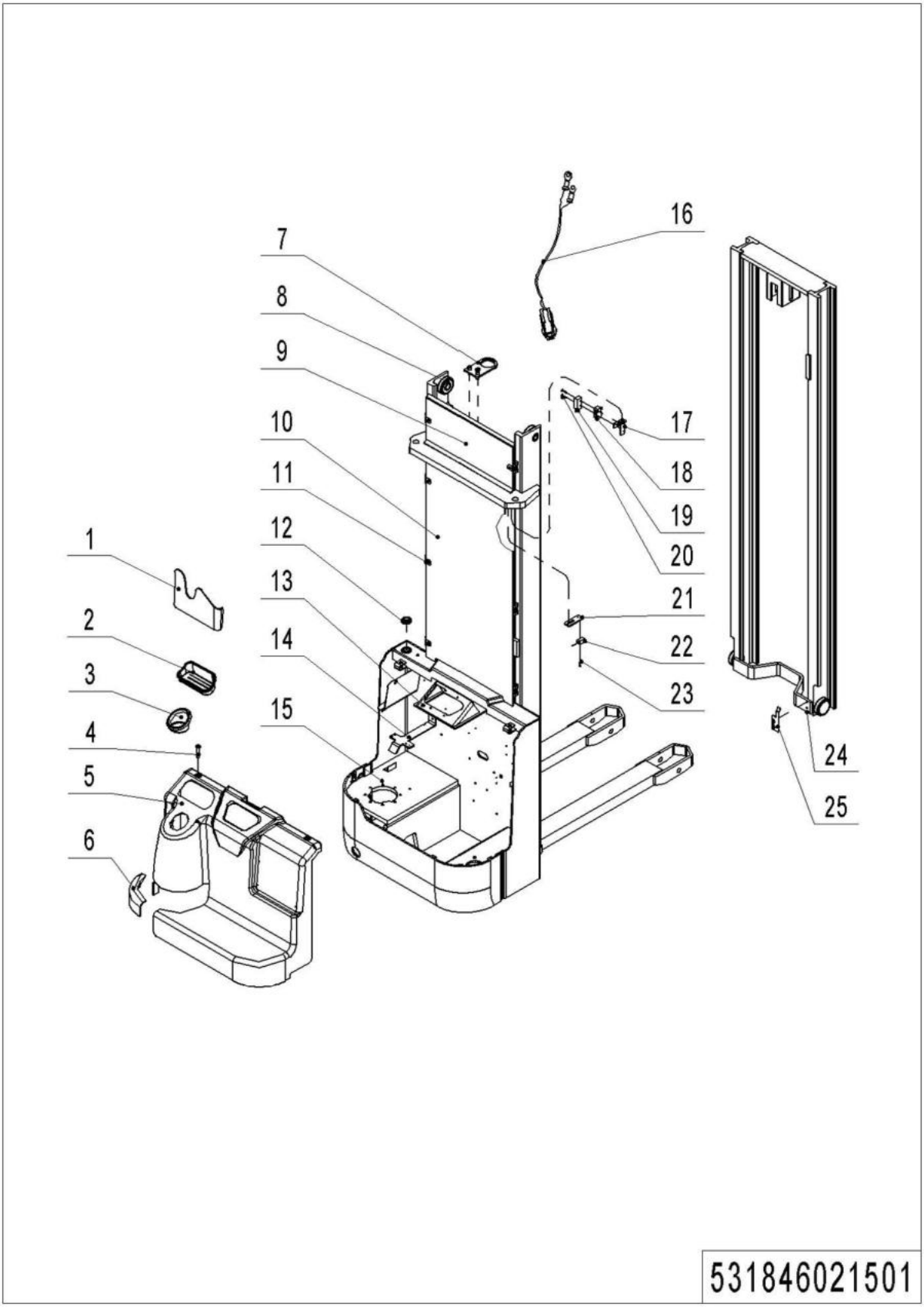

1= Supply as package. 2= Supply with constraints. 3= Phasing-out supply. 4= Supply as assembly. 5= Check other tables.

02 Chassis (Two Stage Mast) (531846021501)

No.	Item Code	Mark	Item Description	Qty.	Substitute	Note
1	534721520022	2	File Box	1		Specify Color For Order
2	534721520021	2	Container	1		
3	534721520020	2	Cup Holder	1		
4	941100100002	2	Screw	2		
5	531821520065	2	Protective Cover	1		Specify Color For Order
6	534721520019	2	Protective Cover	1		Specify Color For Order
7	532644020097	2	Fixing Plate	1		
8	940200300007		Compound Roller	4		
9	531821520044	2	Guard Plate	1		
9	531821520045	2	Protective Frame	1		
10	531821520039	2	Guard Plate	1		Lift Height 2900
10	531821520038	2	Guard Plate	1		Lift Height 3200
10	531821520030	2	Guard Plate	1		Lift Height 3600
10	531821520042	2	Protective Frame	1		Lift Height 2900
10	531821520041	2	Protective Frame	1		Lift Height 3200
10	531821520040	2	Protective Frame	1		Lift Height 3600
11	940400300001	2	Spring Buckle	8		Guard Plate
11	320443020321	2	Press Plate	8		Protective Frame
12	505621520036	2	Jacket	1		
13	531810010000	2	Mounting Plate	1		
14	531821520026	2	Bracket	1		
15	531821510001	2	Chassis(3600, 570x1150)	1		
15	531821510002	2	Chassis(3200, 570x1150)	1		
15	531821510004	2	Chassis(2900, 570x1150)	1		
15	531821510006	2	Chassis(3600, 685x1150)	1		
15	531821510007	2	Chassis(3200, 685x1150)	1		
15	531821510008	2	Chassis(2900, 685x1150)	1		
16	531833010018	2	Wire Harness	1		
17	531821520006	2	Fixing Plate	1		
18	920200300001		Microswitch	1		

1= Supply as package. 2= Supply with constraints. 3= Phasing-out supply. 4= Supply as assembly. 5= Check other tables.

02 Chassis (Two Stage Mast) (531846021501) Continuation

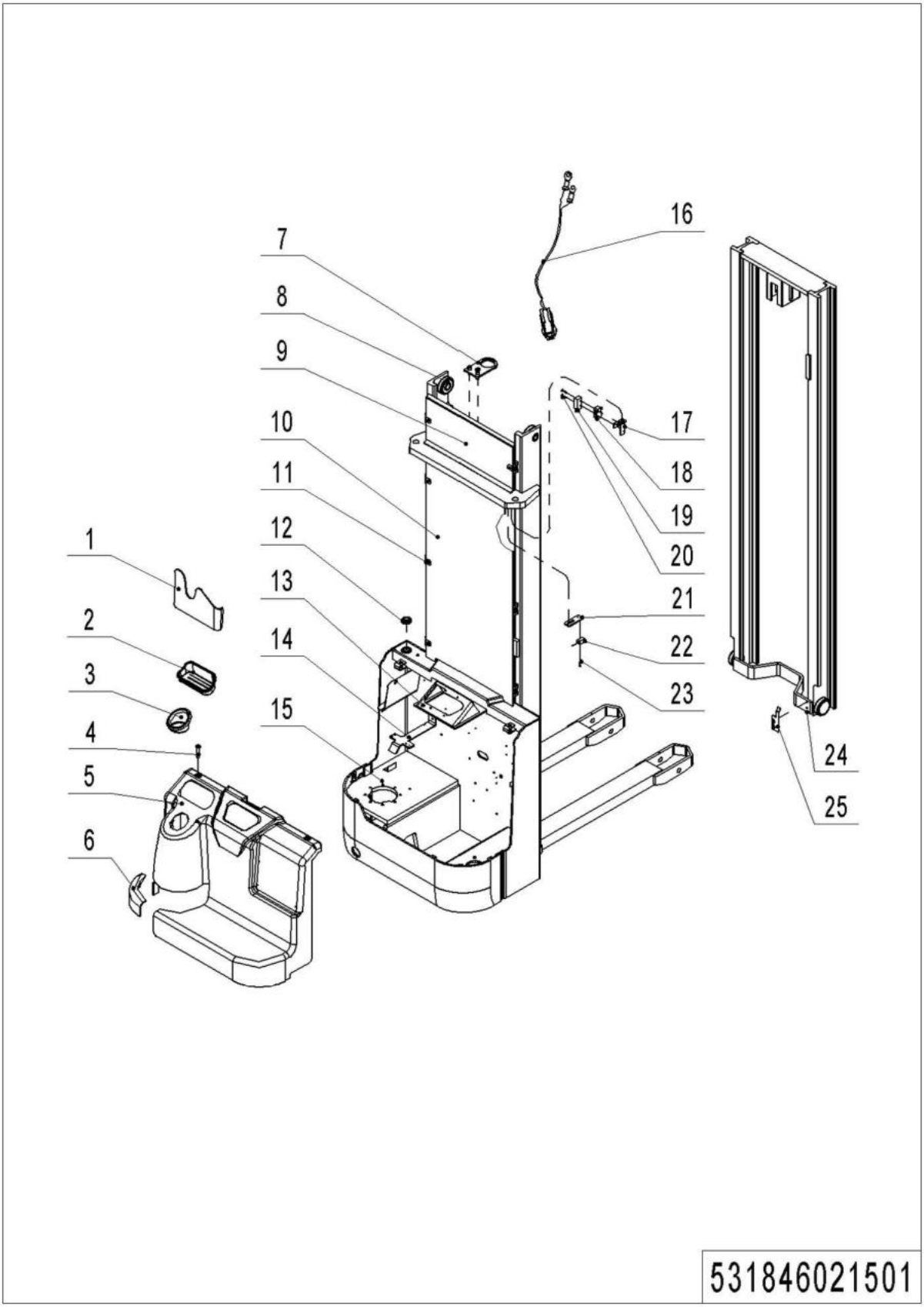

1= Supply as package. 2= Supply with constraints. 3= Phasing-out supply. 4= Supply as assembly. 5= Check other tables.

02 Chassis (Two Stage Mast) (531846021501) Continuation

No.	Item Code	Mark	Item Description	Qty.	Substitute	Note
19	920200300008	2	Protective Cover	1		
20	910200400006	1	Screw	2		
21	531821520007	2	Fixing Plate	1		
22	920200400032		Proximity Switch	1		
23	910200500015	1	Screw	2		
24	531821510005	2	Inner Mast(2900)	1		
24	531821510003	2	Inner Mast(3200)	1		
24	531821510000	2	Inner Mast(3600)	1		
25	531821520001	2	Stop Plate	1		

03 Chassis (Single Stage Mast) (531846021502)

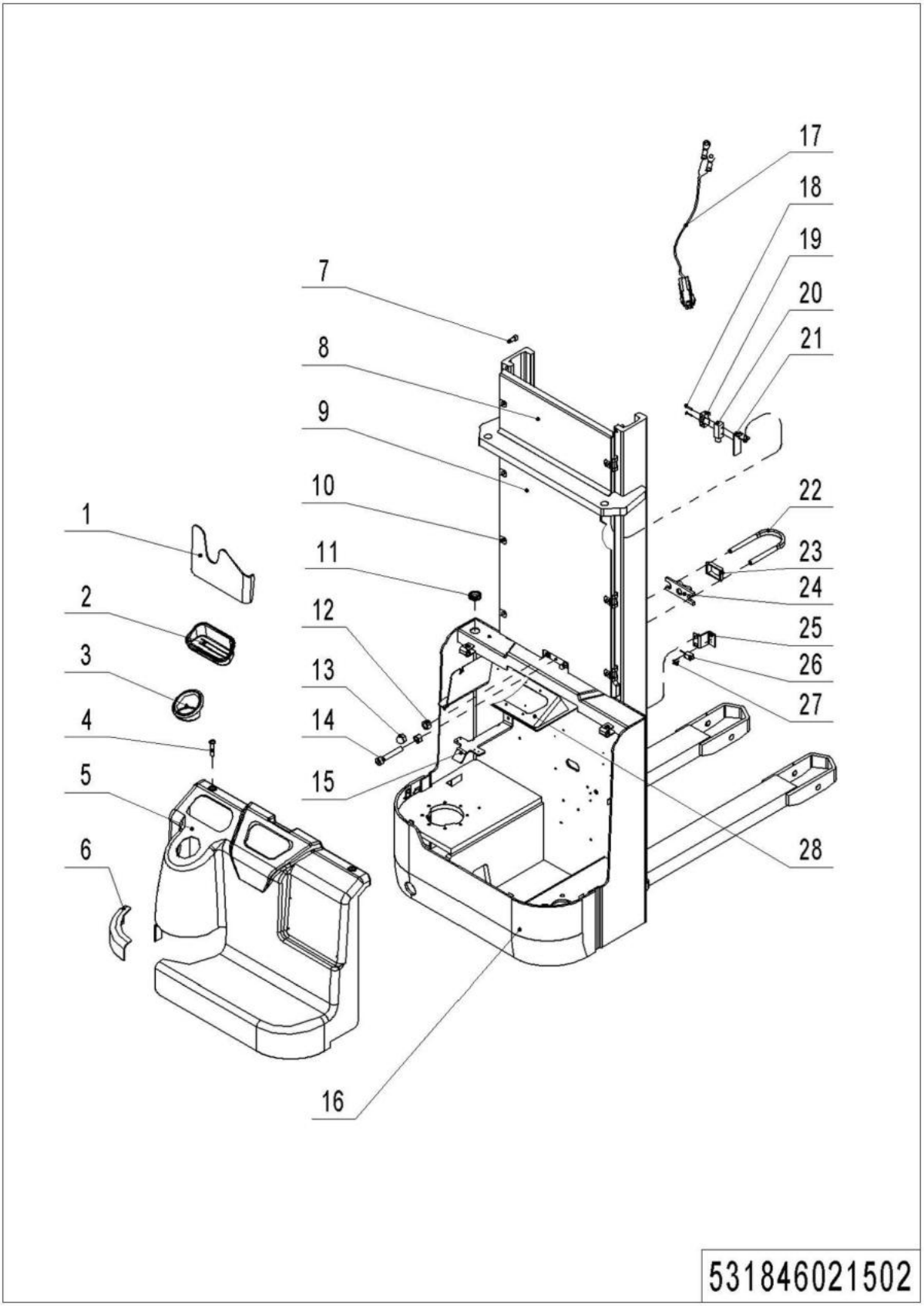

1= Supply as package. 2= Supply with constraints. 3= Phasing-out supply. 4= Supply as assembly. 5= Check other tables.

03 Chassis (Single Stage Mast) (531846021502)

No.	Item Code	Mark	Item Description	Qty.	Substitute	Note
1	534721520022	2	File Box	1		Specify Color For Order
2	534721520021	2	Container	1		
3	534721520020	2	Cup Holder	1		
4	941100100002	2	Screw	2		
5	531821520065	2	Protective Cover	1		Specify Color For Order
6	534721520019	2	Protective Cover	1		Specify Color For Order
7	910200200075	1	Screw	2		
8	531821520044	2	Guard Plate	1		
8	531821520045	2	Protective Frame	1		
9	531821520054	2	Guard Plate	1		Lift Height 1600
9	531821520060	2	Guard Plate	1		Lift Height 2000
9	531821520061	2	Protective Frame	1		Lift Height 1600
9	531821520062	2	Protective Frame	1		Lift Height 2000
10	940400300001	2	Spring Buckle	8		Guard Plate
10	320443020321	2	Press Plate	8		Protective Frame
11	505621520036	2	Jacket	1		
12	910300100007	1	Nut	3		
13	910301000001	1	Nut	2		
14	910200200083	1	Screw	1		
15	531821520026	2	Bracket	1		
16	531821510011	2	Chassis(1600, 685x1150)	1		
16	531821510012	2	Chassis(2000, 685x1150)	1		
16	531821510009	2	Chassis(1600, 570x1150)	1		
16	531821510010	2	Chassis(2000, 570x1150)	1		
17	531833010018	2	Wire Harness	1		
18	910200400006	1	Screw	2		
19	920200300001		Microswitch	1		
20	920200300008	2	Protective Cover	1		
21	531821520055	2	Fixing Plate	1		
22	531821520056	2	Bolt	1		

1= Supply as package. 2= Supply with constraints. 3= Phasing-out supply. 4= Supply as assembly. 5= Check other tables.

03 Chassis (Single Stage Mast) (531846021502) Continuation

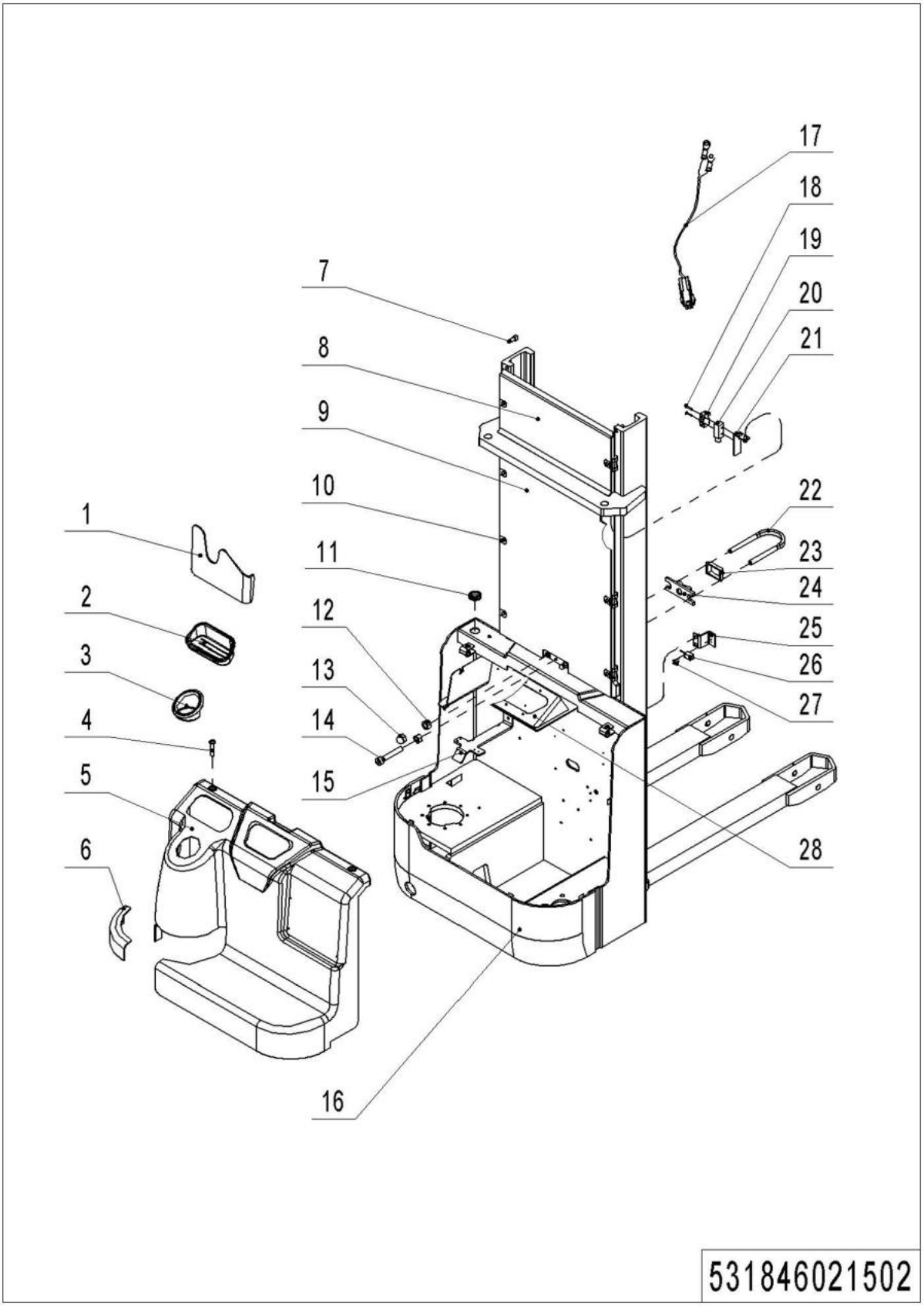

1= Supply as package. 2= Supply with constraints. 3= Phasing-out supply. 4= Supply as assembly. 5= Check other tables.

03 Chassis (Single Stage Mast) (531846021502) Continuation

No.	Item Code	Mark	Item Description	Qty.	Substitute	Note
23	255044020129	2	Protective Cover	1		
24	255044020130	2	Fixing Base	1		
25	532021520053	2	Fixing Plate	1		
26	920200400032		Proximity Switch	1		
27	910200500015	1	Screw	2		
28	531810010000	2	Mounting Plate	1		

Chapter 4: Steering System, Braking System, Wheels

01 Tiller Unit (531846011001)

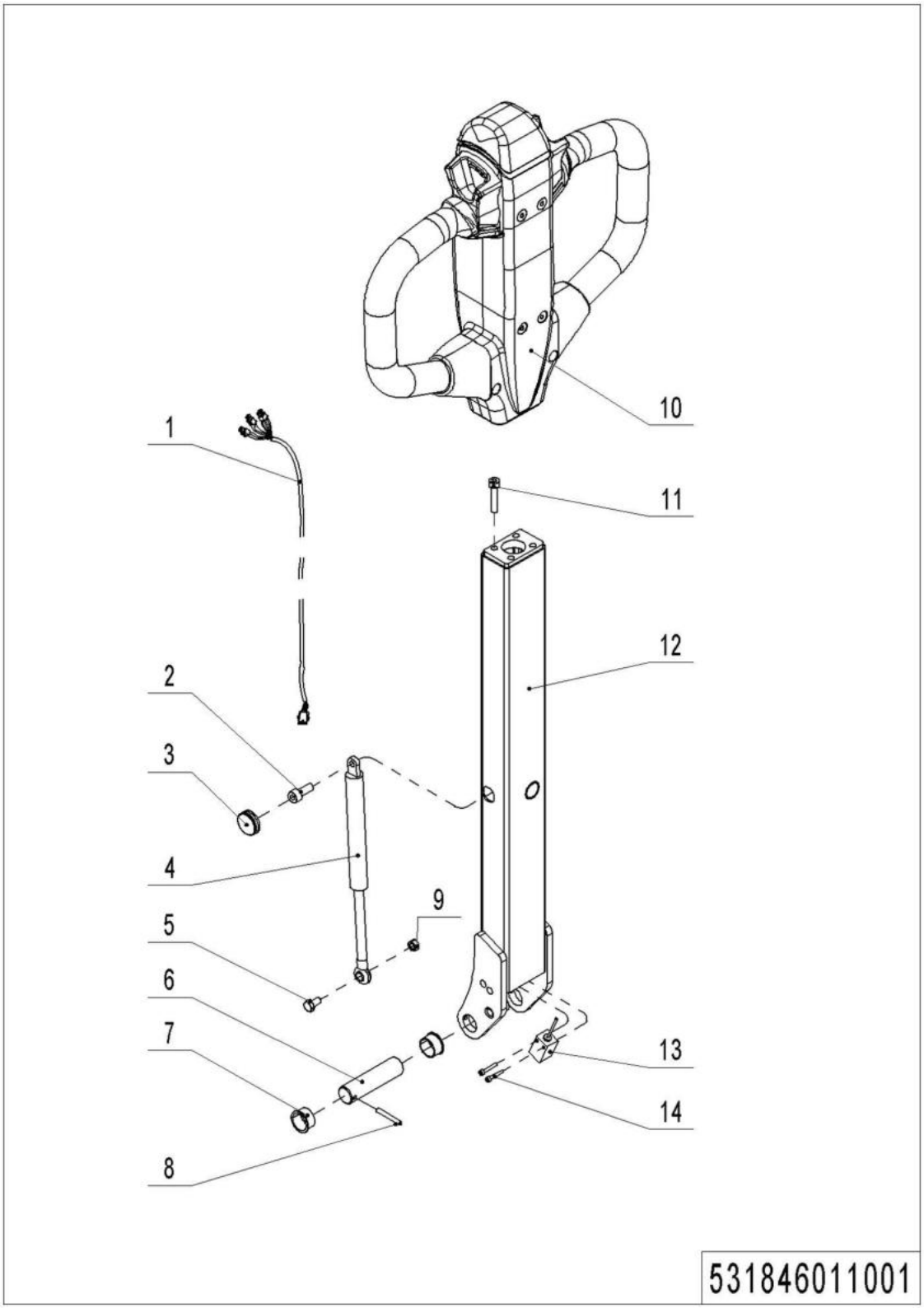

01 Tiller Unit (531846011001)

No.	Item Code	Mark	Item Description	Qty.	Substitute	Note
1	531833010016	2	Wire Harness	1		
2	941100400001	1	Screw	1		
3	502311020009	2	Close Plate	1		
4	940400100043		Air Spring	1		
5	910100300024	1	Bolt	1		
6	403511020003	2	Axle	1		
7	940500200005		Bushing	2		
8	910600400017	1	Spring Pin	1		
9	910300100006	1	Nut	1		
10	----------	5	Control Handle	1		Check 534346011002
11	910200200058	1	Screw	4		
12	532011010000	2	Tiller	1		
13	920200400033		Proximity Switch	1		
14	910200200005	1	Screw	2		

02 Control Handle (534346011002)

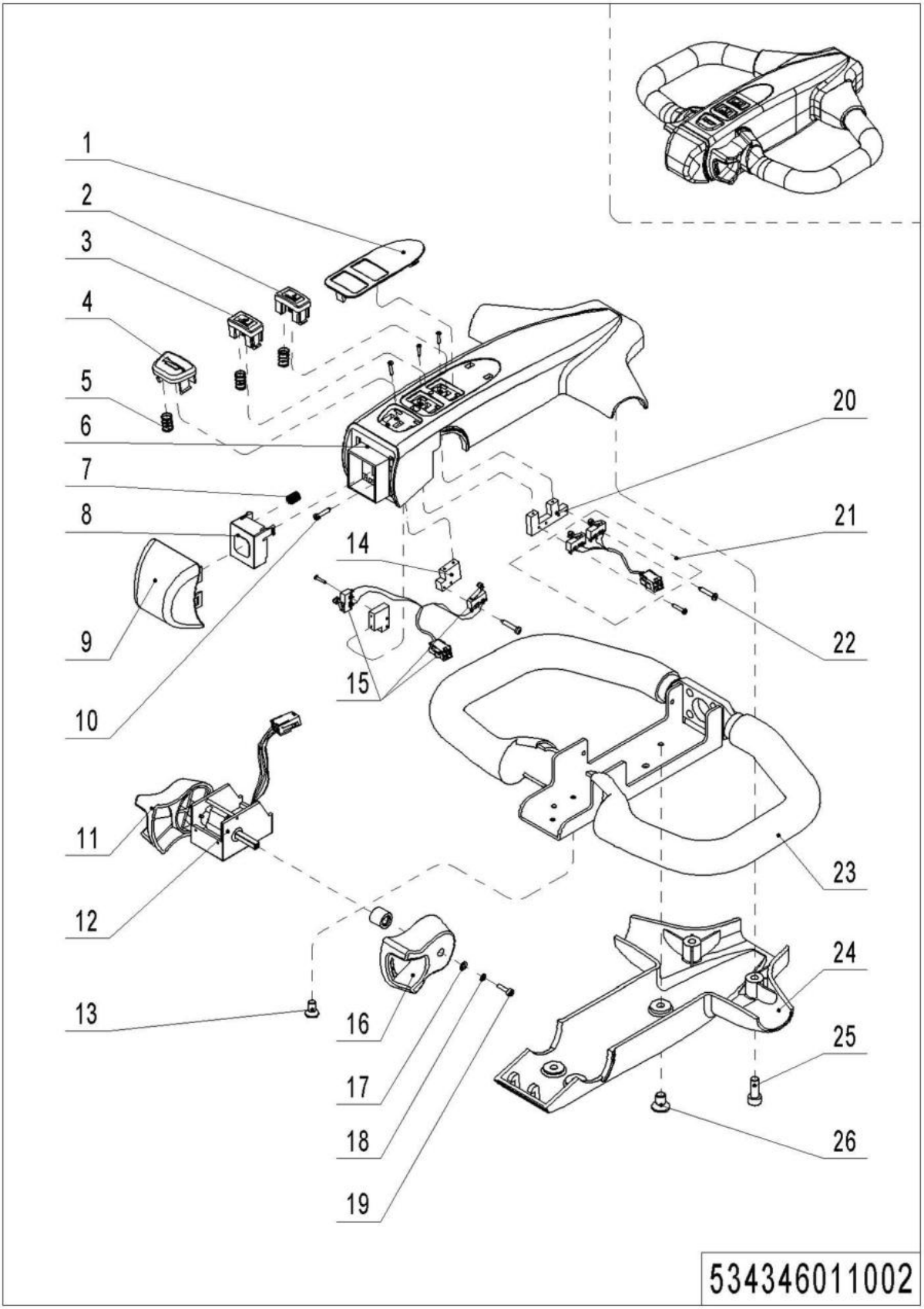

1= Supply as package. 2= Supply with constraints. 3= Phasing-out supply. 4= Supply as assembly. 5= Check other tables.

02 Control Handle (534346011002)

No.	Item Code	Mark	Item Description	Qty.	Substitute	Note
--	502311010005	2	Control Handle	1		
1	502311020023	2	Label	1		
2	502311020021	2	Button	1		
3	502311020020	2	Button	1		
4	502311020019	2	Button	1		
5	502311020022	2	Spring	6		
6	502311020024	2	Handle Cap	1		
7	502311020018	2	Spring	4		
8	502311020017	2	Bracket	1		
9	502311020016	2	Cap,Break Switch	1		
10	910201400001	1	Screw	8		
11	502311020011	2	Traction lever	1		
12	921700100018		Accelerator	1		
13	910200600005	1	Screw	3		
14	502311020014	2	Bracket	1		
15	534311010007		Microswitch Kits	1		
16	502311020012	2	Traction lever	1		
17	910400100002	1	Flat Washer	2		
18	910400500002	1	Spring Washer	2		
19	910200200003	1	Screw	2		
20	502311020015	2	Bracket	1		
21	534311010008		Microswitch Kits	1		
22	910201400002	1	Screw	6		
23	502311010006	2	Bracket	1		
24	502311020025	2	Handle Cap	1		
25	910200200035	1	Screw	2		
26	910200400015	1	Screw	4		

1= Supply as package. 2= Supply with constraints. 3= Phasing-out supply. 4= Supply as assembly. 5= Check other tables.

03 Load Wheel (Tandem Rollers) (531846017001)

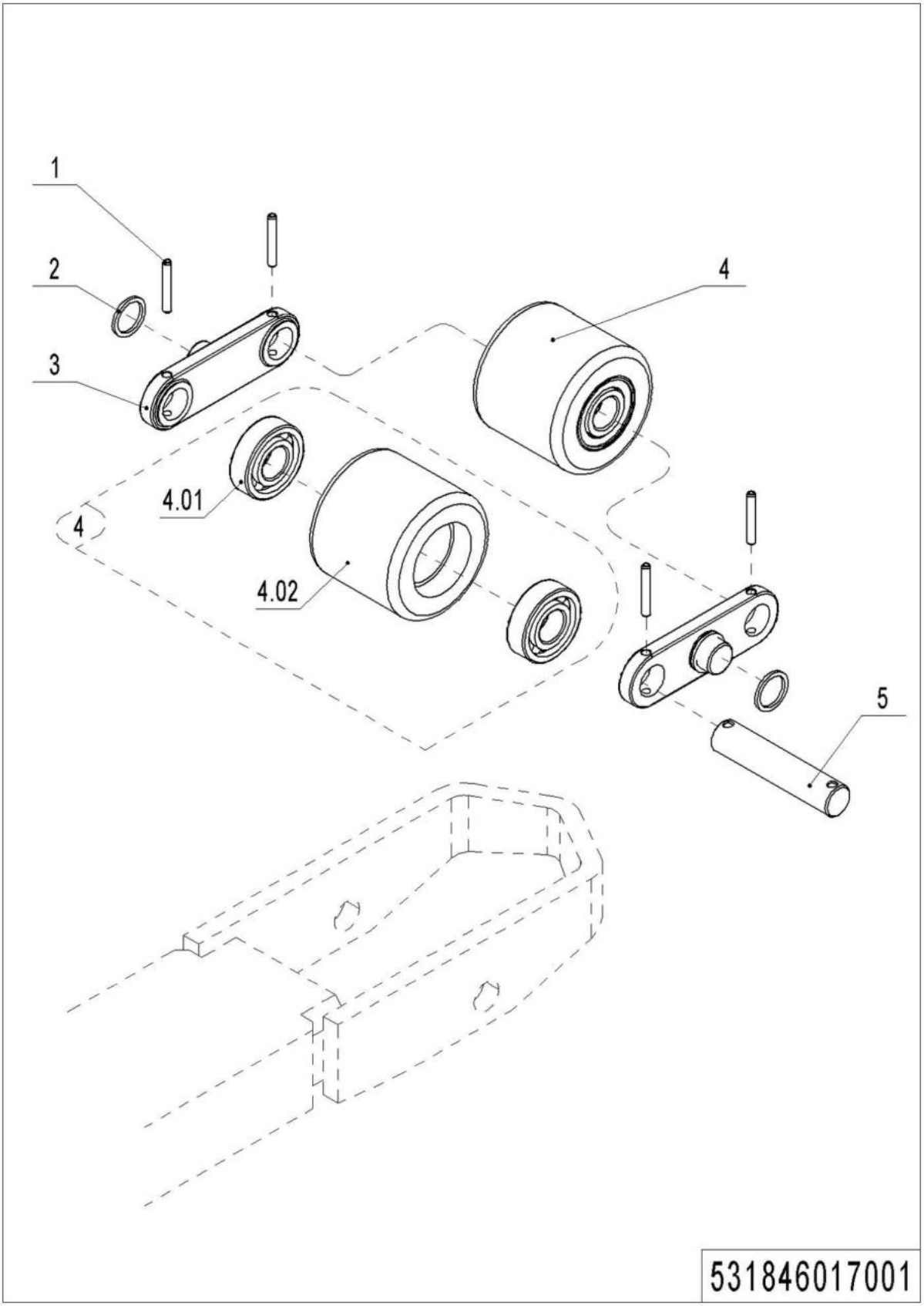

1= Supply as package. 2= Supply with constraints. 3= Phasing-out supply. 4= Supply as assembly. 5= Check other tables.

03 Load Wheel(Tandem Rollers) (531846017001)

No.	Item Code	Mark	Item Description	Qty.	Substitute	Note
1	910600400027	1	Spring Pin	8		
2	940600500014	2	Washer	4		
3	532617020002	2	Plate	4		
4	502398510002		Wheel	4		
4.01	910700200019		Bearing	8		
4.02	940300300005		WheelΦ80x70	4		
5	502317020001	2	Axle	4		

04 Load Roller(Single Roller)（537046017001）

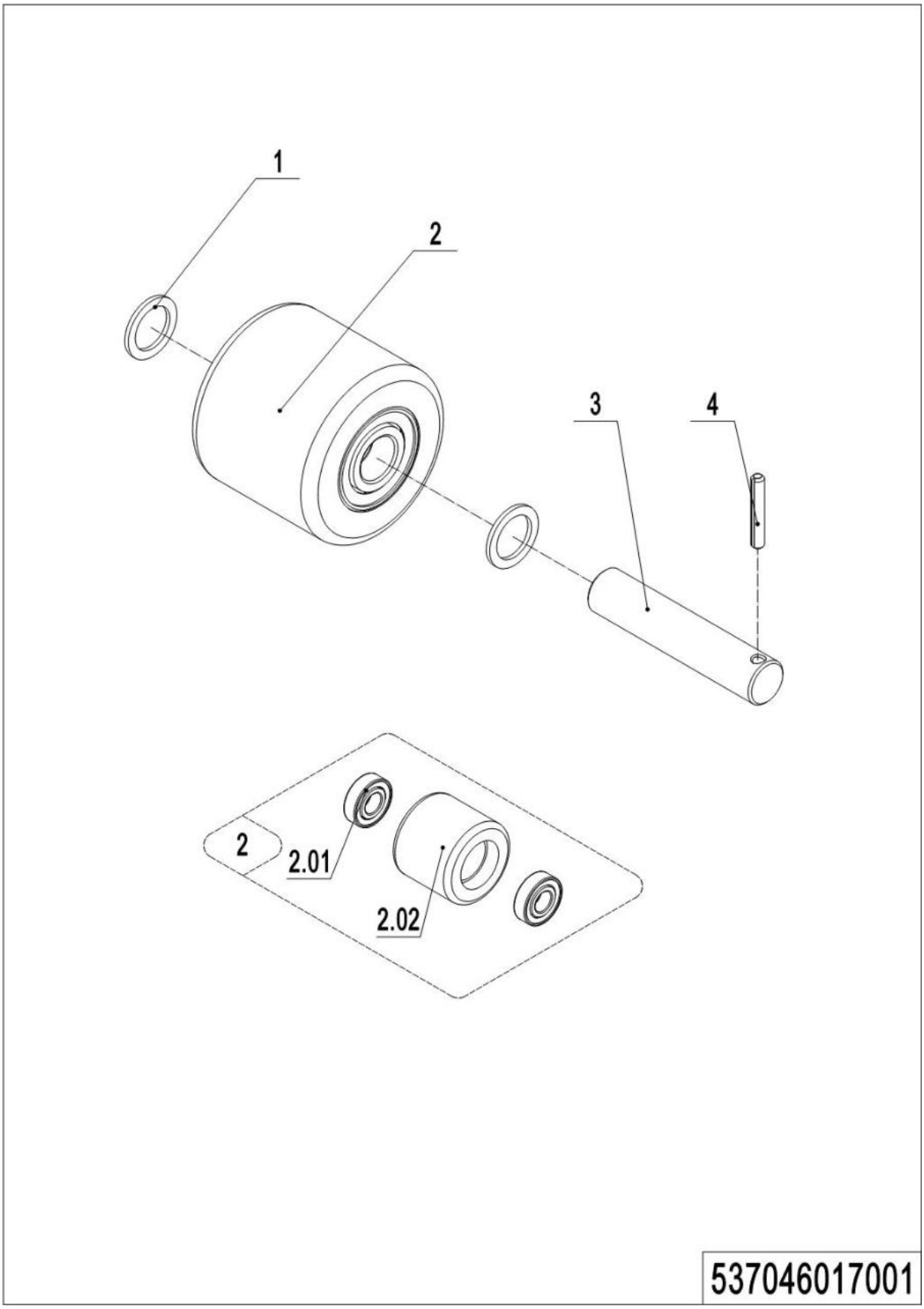

1= Supply as package. 2= Supply with constraints. 3= Phasing-out supply. 4= Supply as assembly. 5= Check other tables.

04 Load Roller(Single Roller)（537046017001）

No.	Item Code	Mark	Item Description	Qty.	Substitute	Note
1	940600500053		Washer	2		
2	502398510014		Wheel	1		
2.01	910700200019		Bearing	2		
2.02	940300300023		WheelΦ80x93	1		
3	532217020001		Axle	1		
4	910600400030		Spring Pin	1		

05 Caster (532246016501)

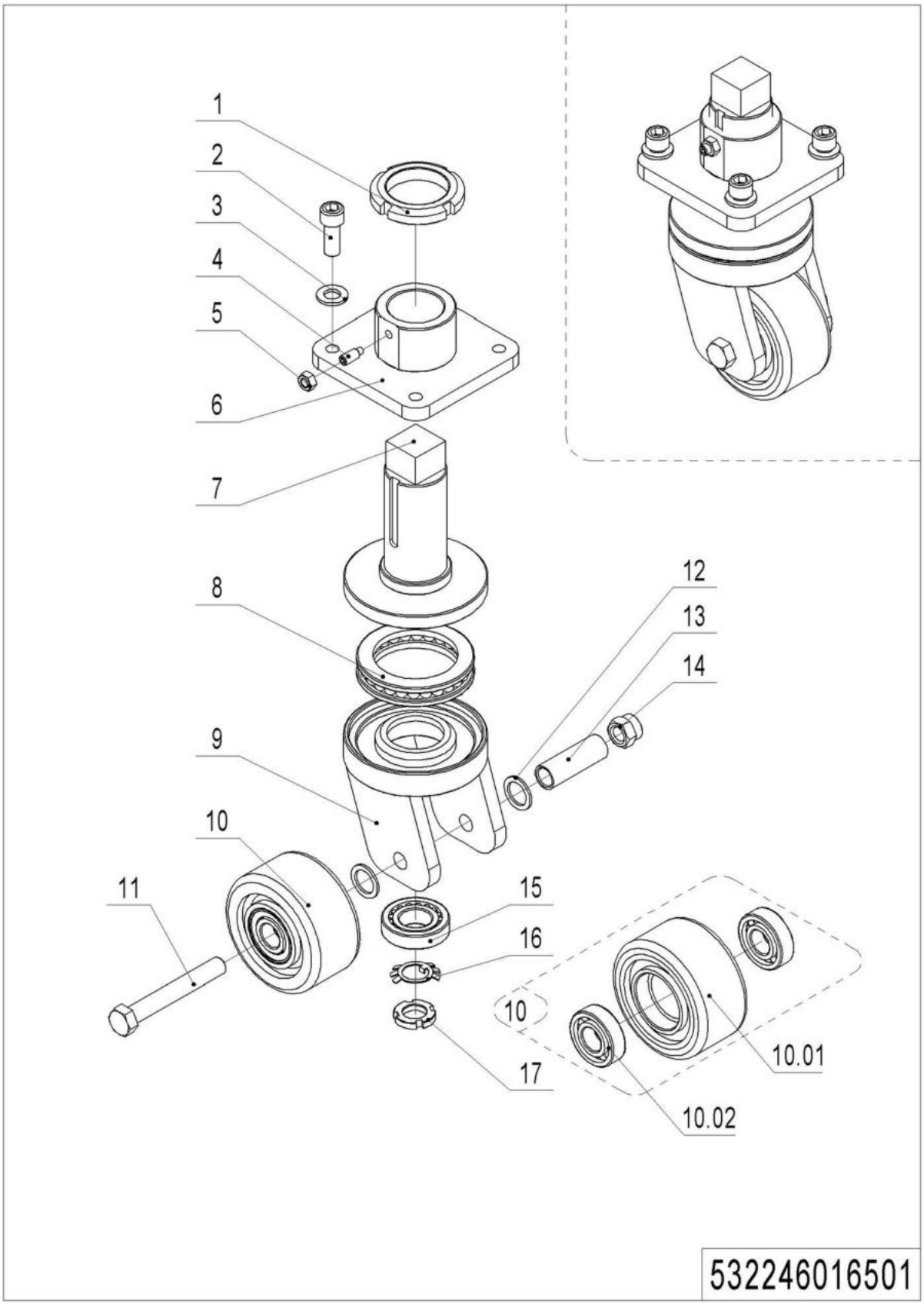

1= Supply as package. 2= Supply with constraints. 3= Phasing-out supply. 4= Supply as assembly. 5= Check other tables.

05 Caster (532246016501)

No.	Item Code	Mark	Item Description	Qty.	Substitute	Note
--	532298510041		Caster Assembly	1		
1	941100900004	1	Nut	1		
2	910200200098	1	Screw	4		
3	910400100008	1	Flat Washer	4		
4	910201000012	1	Screw	1		
5	910300100006	1	Nut	1		
6	532216510003	2	Fixing Base	1		
7	532216510002	2	Axle	1		
8	910700700011		Bearing	1		
9	532216510001	2	Wheel Carrier	1		
10	532298510004		Caster Assembly	1		
10.01	940300300030		WheelΦ100x50	1		
10.02	910700200019		Bearing	2		
11	910100100069	1	Bolt	1		
12	940600500005	1	Washer	4		
13	532216520006		Sleeve	1		
14	910300500007	1	Nut	1		
15	910700600001		Bearing	1		
16	910400900002	1	Lock Washer	1		
17	910300700008	1	Nut	1		

Chapter 5: Electrical Parts

01 Wire Harness (531802033001)

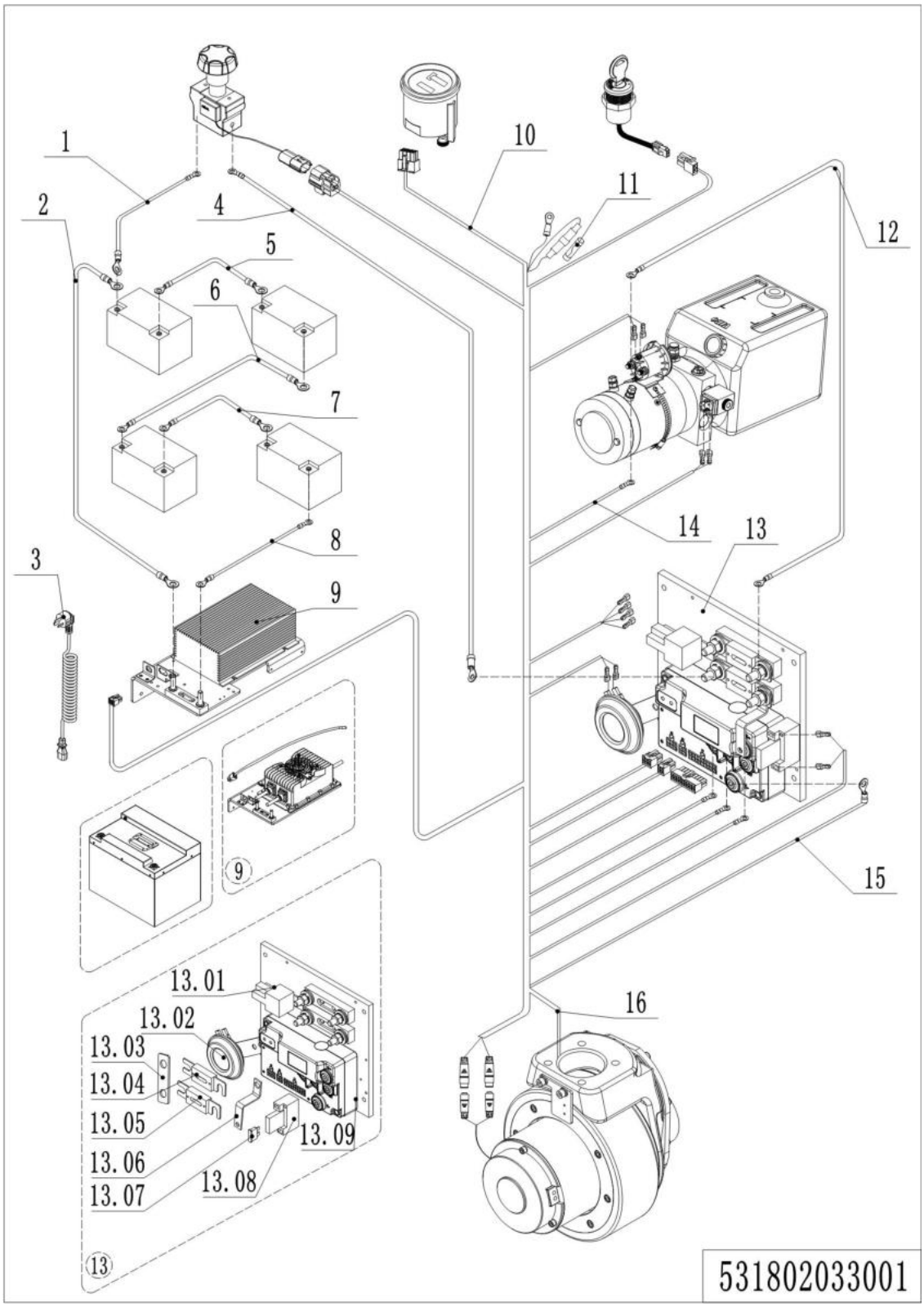

1= Supply as package. 2= Supply with constraints. 3= Phasing-out supply. 4= Supply as assembly. 5= Check other tables.

01 Wire Harness (534346033001)

No.	Item Code	Mark	Item Description	Qty.	Substitute	Note
1	531833010006	2	Cable	1		ECL15B
1	531833010022	2	Cable	1		ECL15N
2	531833010012	2	Cables	1		ECL15B
2	531833010024	2	Cables	1		ECL15N
3	503233010012	2	Cables	1		
3	921500200004	2	Spring Cable(ENG)	1		
3	921500200002	2	Spring Cable(USA)	1		
3	921500200005	2	Spring Cable(EU)	1		
3	921500200003	2	Spring Cable(AUS)	1		
3	921500200006	2	Spring Cable(ITY)	1		
3	921500200007	2	Spring Cable(SWD)	1		
3	921500200037	2	Spring Cable(ARG)	1		
3	921500200029	2	Spring Cable(ISR)	1		
4	531833010003	2	Cable	1		
5	531833010007	2	Cable	1		ECL15B
6	531833010008	2	Cable	1		ECL15B
7	531833010009	2	Cable	1		ECL15B
8	531833010013	2	Cables	1		ECL15B
8	531833010023	2	Cables	1		ECL15N
9	531836510000	2	Charger48V8A(Asia)	1		ECL15B
9	531836510001	2	Charger 48V8A(ENG)	1		ECL15B
9	531836510002	2	Charger 48V8A(US)	1		ECL15B
9	531836510003	2	Charger 48V8A(EU)	1		ECL15B
9	531836510004	2	Charger 48V8A(AUS)	1		ECL15B
9	531836510005	2	Charger 48V8A(ITA)	1		ECL15B
9	531836510006	2	Charger 48V8A(SWE)	1		ECL15B
9	531836510007	2	Charger 48V8A(ARG)	1		ECL15B
9	531836510008	2	Charger 48V8A(ISR)	1		ECL15B
9	531836510009	2	Charger 48V20A(Asia)	1		ECL15N
9	531836510010	2	Charger 48V20A(ENG)	1		ECL15N

1= Supply as package. 2= Supply with constraints. 3= Phasing-out supply. 4= Supply as assembly. 5= Check other tables.

01 Wire Harness (531802033001) Continuation

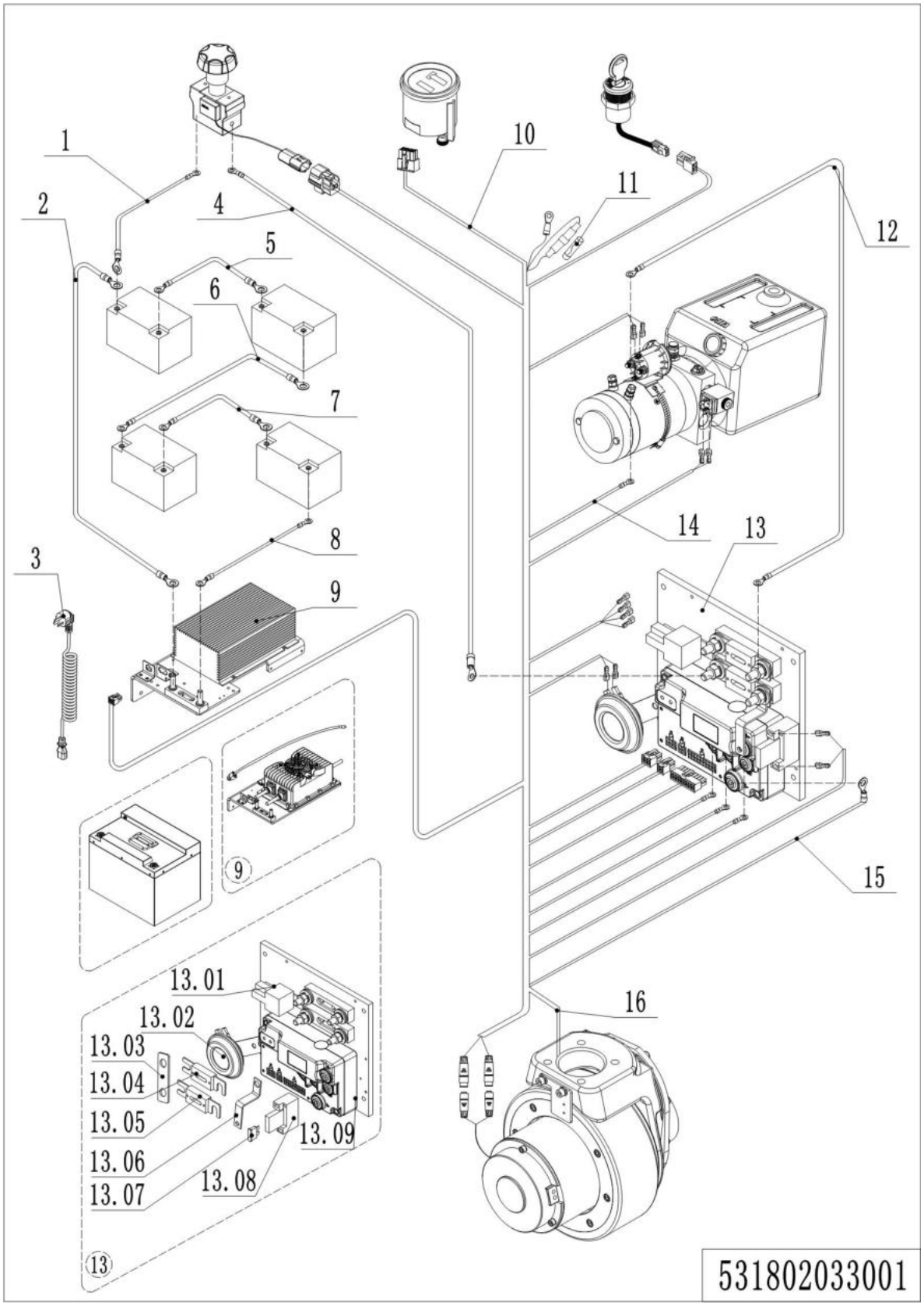

01 Wire Harness (534346033001) Continuation

No.	Item Code	Mark	Item Description	Qty.	Substitute	Note
9	531836510011	2	Charger 48V20A(US)	1		ECL15N
9	531836510012	2	Charger 48V20A(EU)	1		ECL15N
9	531836510013	2	Charger 48V20A(AUS)	1		ECL15N
9	531836510014	2	Charger 48V20A(ITA)	1		ECL15N
9	531836510015	2	Charger 48V20A(SWE)	1		ECL15N
9	531836510016	2	Charger 48V20A(ARG)	1		ECL15N
9	531836510017	2	Charger 48V20A(ISR)	1		ECL15N
10	531833010015	2	Wire Harness	1		ECL15B
10	531833010026	2	Wire Harness	1		ECL15N
11	920100300001	2	Fuse	1		
12	531833010005	2	Cable	1		
13	531833010020	2	Electronic Components	1		
13.01	920800100010	2	Relay	1		
13.02	920500100011	2	Horn	1		
13.03	531833020000	2	Copper Busbar	1		
13.04	920100100006		Fuse	1		
13.05	920100100004		Fuse	1		
13.06	505633020003	2	Copper Busbar	1		
13.07	920100200002		Fuse	1		
13.08	920100400006	2	Fuse Holder	1		
13.09	921400100093	2	Controller	1		
14	531833010011	2	Cable	1		ECL15B
14	531833010022	2	Cable	1		ECL15N
15	531833010010	2	Cable	1		
16	531833010021	2	Wire Harness	1		

1= Supply as package. 2= Supply with constraints. 3= Phasing-out supply. 4= Supply as assembly. 5= Check other tables.

02 Display Assembly (531846010001)

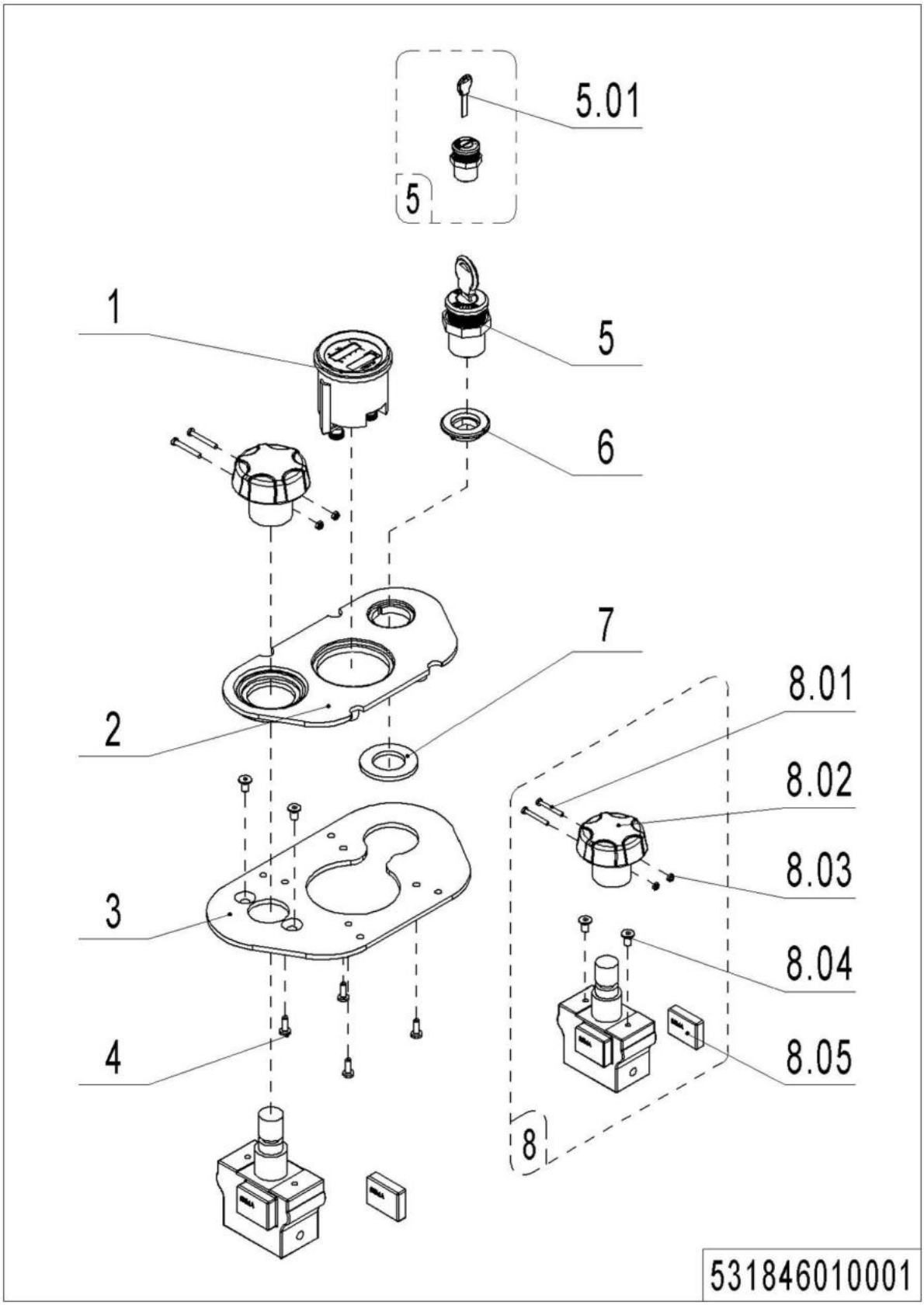

1= Supply as package. 2= Supply with constraints. 3= Phasing-out supply. 4= Supply as assembly. 5= Check other tables.

02 Display Assembly (531846010001)

No.	Item Code	Mark	Item Description	Qty.	Substitute	Note
1	921100100057	2	Battery Indicator	1		ECL15B
1	921100100072	2	Battery Indicator	1		ECL15N
2	534710020004	2	Panel	1		
3	534710020005	2	Fixing Base	1		
4	910201300001	1	Screw	4		
5	506534010000	2	Key Assembly	1		ECL15B
5	531834010001	2	Key Assembly	1		ECL15N
5.01	505698520031	2	Key	1		ECL15B
5.01	920200200024	2	Key	1		ECL15N
6	531810020002	2	Mounting Base	1		ECL15N
7	910400100012	1	Flat Washer	1		
8	920200100001	2	Emergency Button	1		
8.01	910200500016	1	Screw	2		
8.02	505698520029	2	Button	1		
8.03	910300100002	1	Nut	2		
8.04	910200400010	1	Screw	2		
8.05	505698520030	2	Proximity Switch	1		

03 Traction Battery (531846037001)

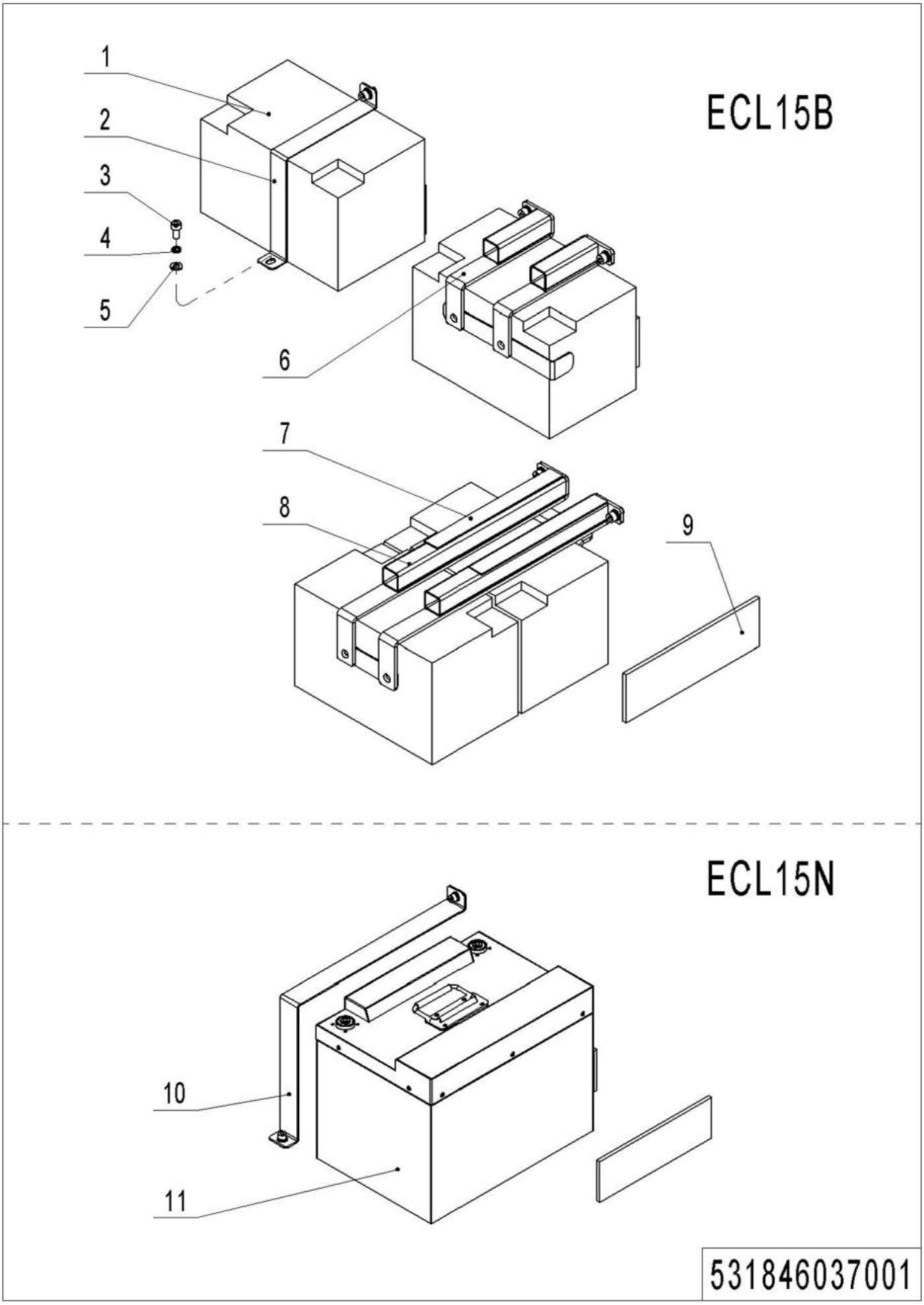

1= Supply as package. 2= Supply with constraints. 3= Phasing-out supply. 4= Supply as assembly. 5= Check other tables.

03 Traction Battery (531846037001)

No.	Item Code	Mark	Item Description	Qty.	Substitute	Note
1	920600100103	2	Battery12V64Ah	4		
2	531837020000	2	Fixing Plate	1		
3	910200200055	1	Screw	6		
4	910400500006	1	Spring Washer	6		
5	910400100006	1	Flat Washer	6		
6	531837010000	2	Mounting Plate	1		
7	532233020005	2	Crash Pad	13		
8	531837010001	2	Mounting Plate	1		
9	531837020011	2	Crash Pad	4		
10	531837020013	2	Fixing Plate	1		
11	920600100122	2	Li Battery48V50Ah	1		

Chapter 6: Special Equipment

01 Load Backrest (532646040501)

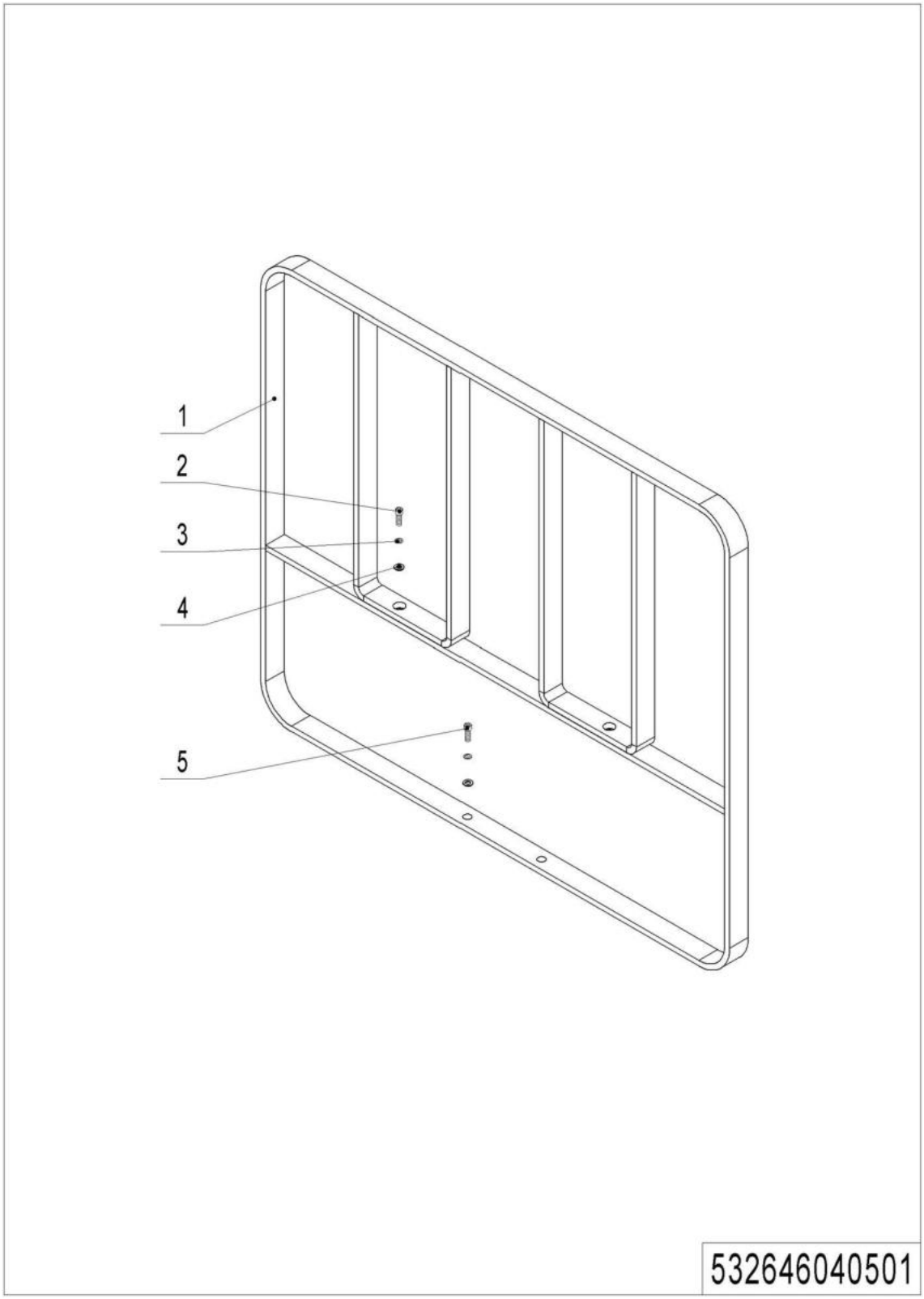

1= Supply as package. 2= Supply with constraints. 3= Phasing-out supply. 4= Supply as assembly. 5= Check other tables.

01 Load Backrest (532646040501)

No.	Item Code	Mark	Item Description	Qty.	Substitute	Note
1	532640510001	2	Load Backrest	1		
2	910200200076	1	Screw	2		
3	910400100007	1	Flat Washer	4		
4	910400500007	1	Spring Washer	4		
5	910200200078	1	Screw	2		

Chapter7: Others

01 Label and Decal (531846047001)

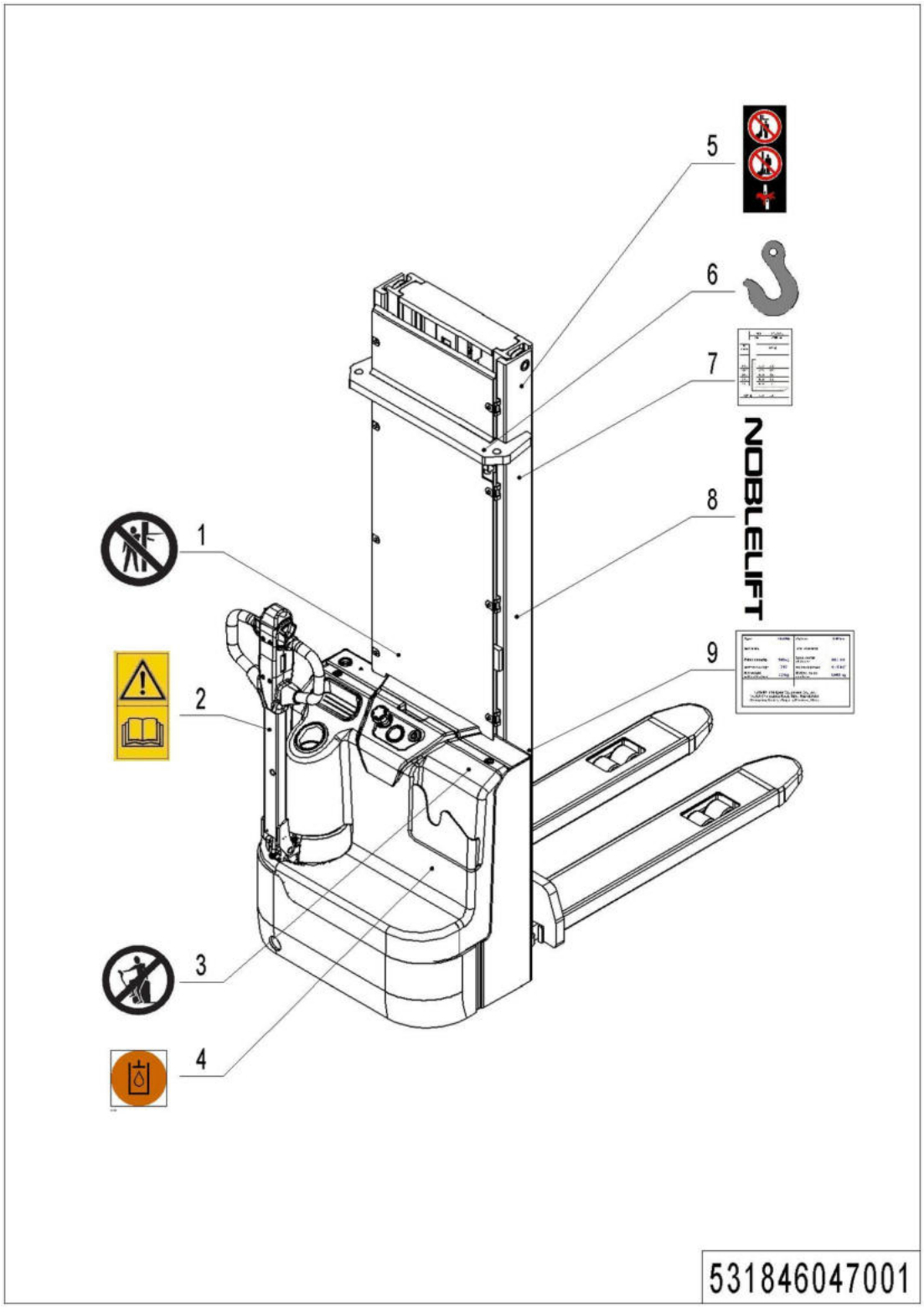

1= Supply as package. 2= Supply with constraints. 3= Phasing-out supply. 4= Supply as assembly. 5= Check other tables.

01 Label and Decal (531846047001)

No.	Item Code	Mark	Item Description	Qty.	Substitute	Note
1	941200100006	2	Label	1		
2	941200300002	2	Label	1		
3	941200100003	2	Label	1		
4	941200300003	2	Label	1		
5	941200100004	2	Label	2		
6	941200300001	2	Label	2		
7	531847520010	2	Load Capacity Diagram	2		
8	941200500001	2	Label	2		
9	531847520000	2	Truck data plate	1		

02 Label and Decal (USA) (531846047002)

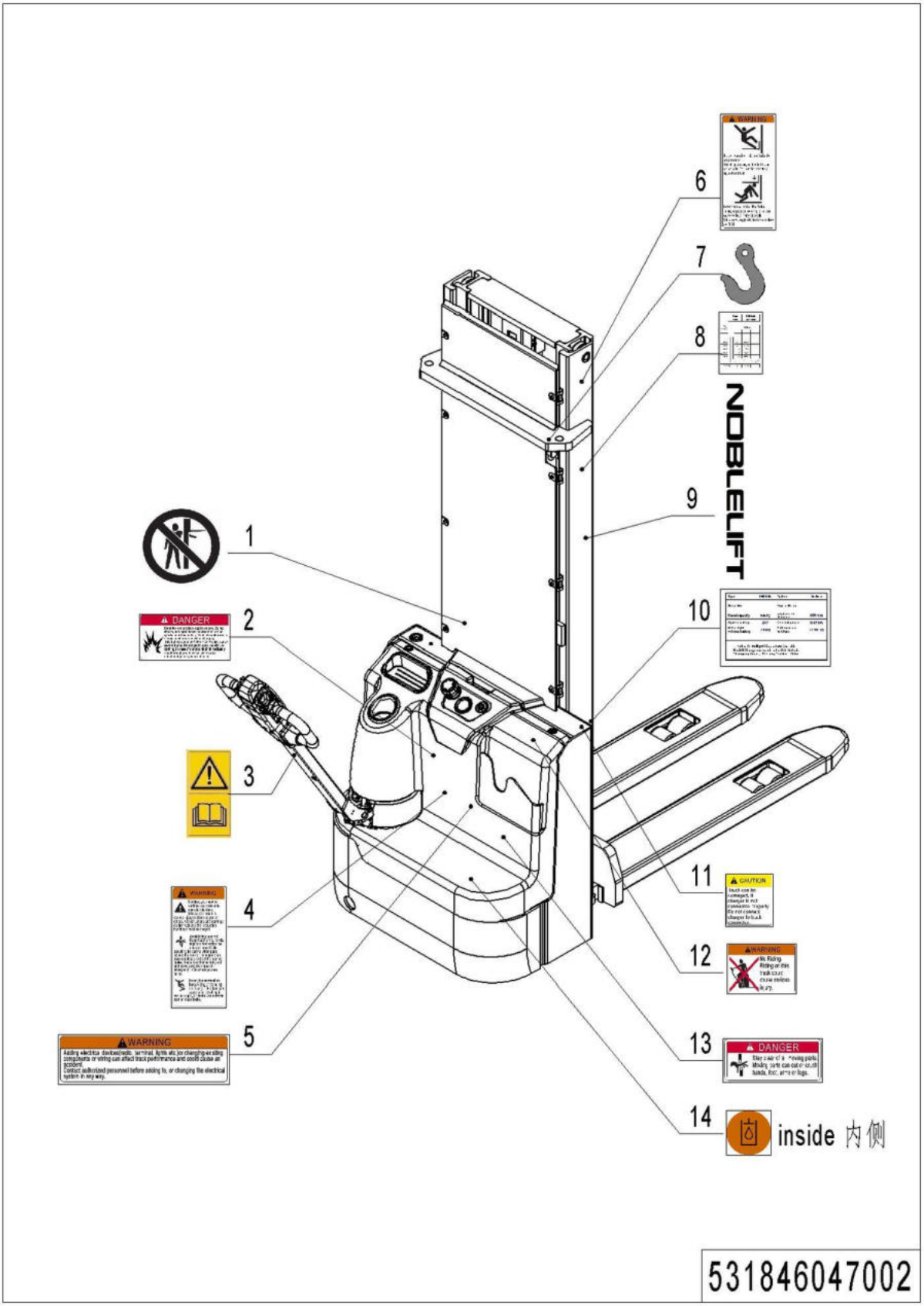

1= Supply as package. 2= Supply with constraints. 3= Phasing-out supply. 4= Supply as assembly. 5= Check other tables.

02 Label and Decal (USA) (531846047002)

No.	Item Code	Mark	Item Description	Qty.	Substitute	Note
1	941200100006	2	Label	1		
2	941200100013	2	Label	1		
3	941200300002	2	Label	1		
4	941200100009	2	Label	1		
5	941200100010	2	Label	1		
6	941200100016	2	Label	1		
7	941200300001	2	Label	2		
8	531847520020	2	Load Capacity Diagram	2		
9	941200500001	2	Label	2		
10	531847520005	2	Truck data plate	1		
11	941200100012	2	Label	1		
12	941200100011	2	Label	1		
13	941200100014	2	Label	1		
14	941200300003	2	Label	1		

Appendix

01 Electrical Circuit Diagram (ECL15B)

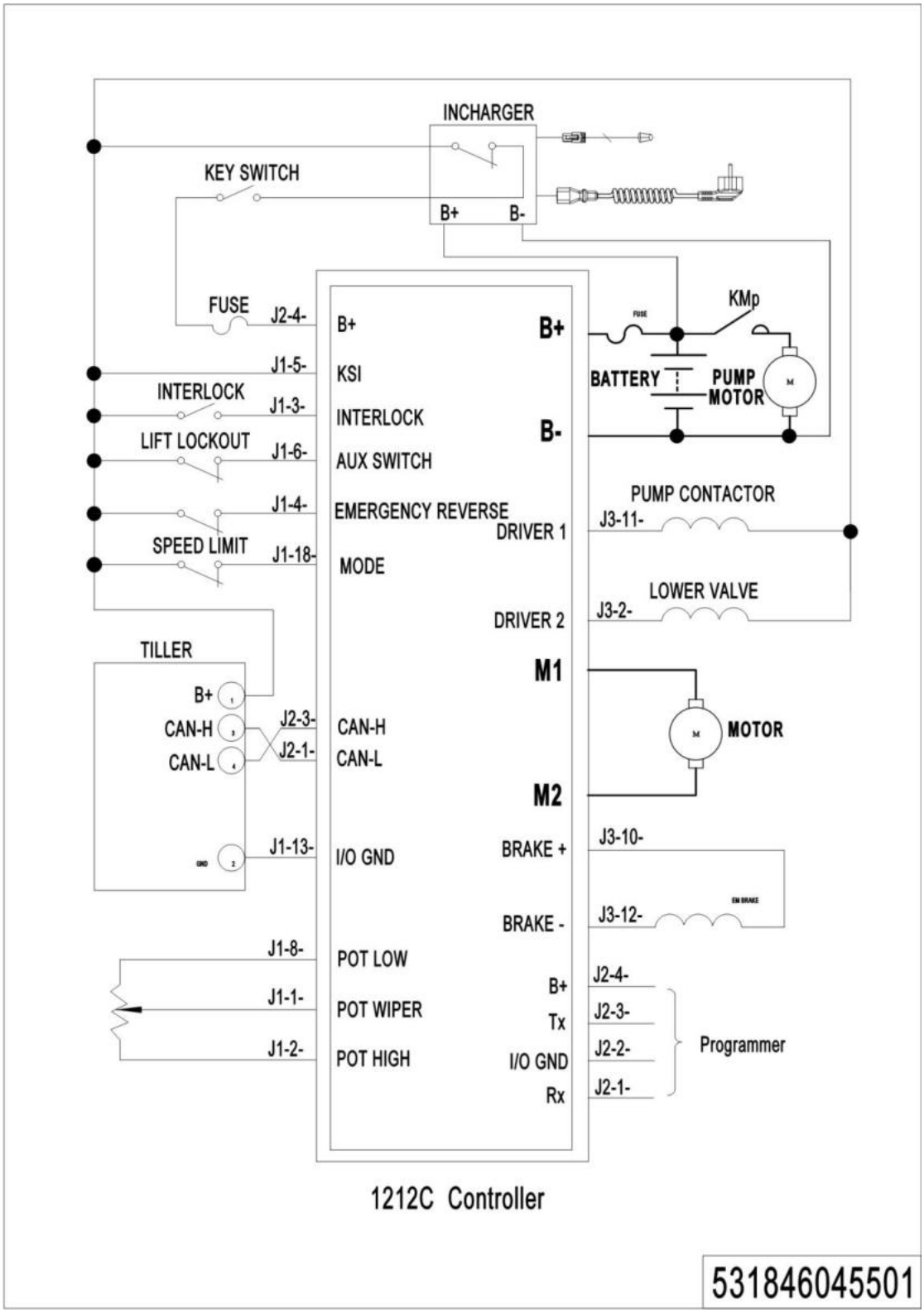

02 Electrical Circuit Diagram (ECL15N)

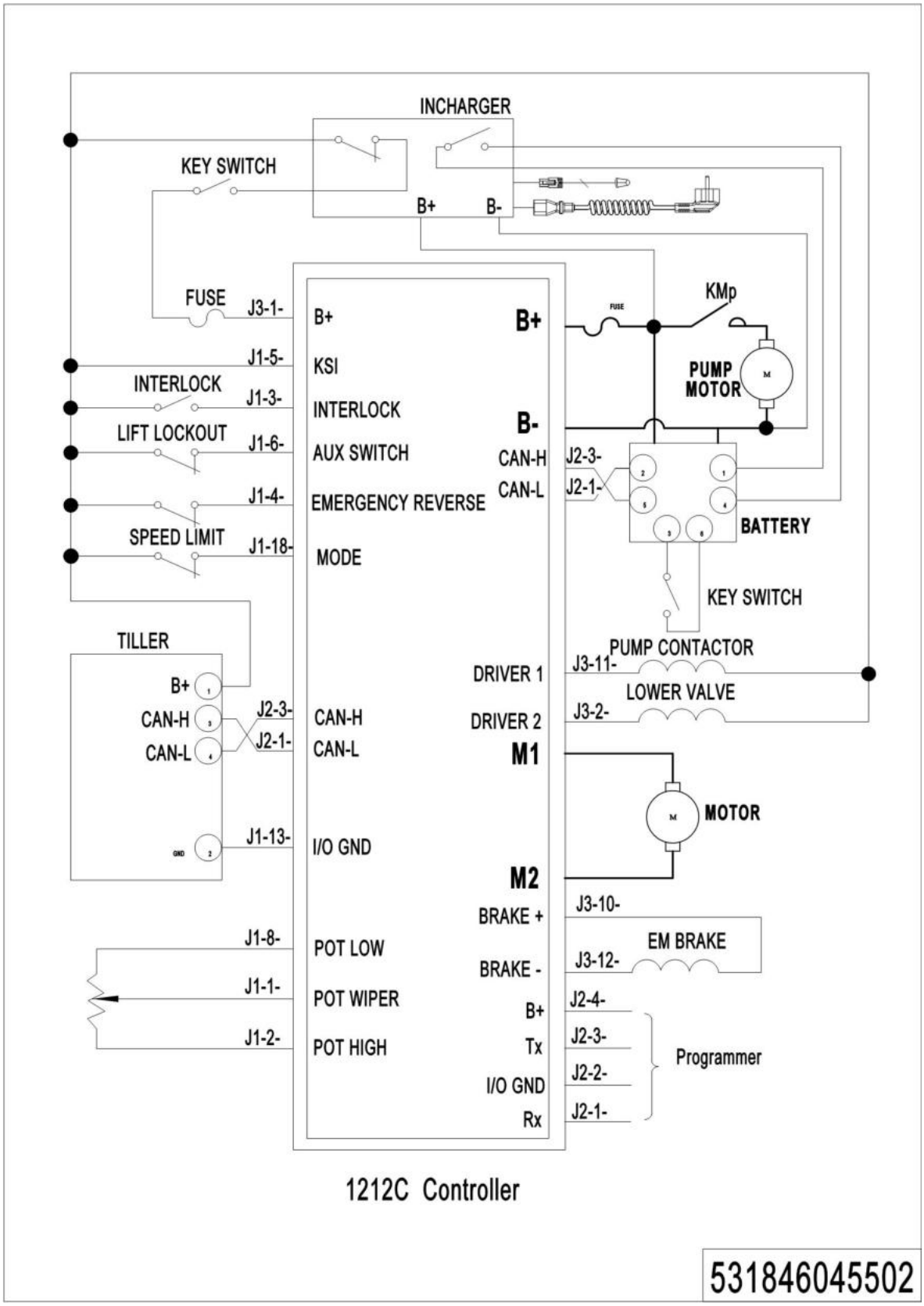

03 Hydraulic Circuit Diagram

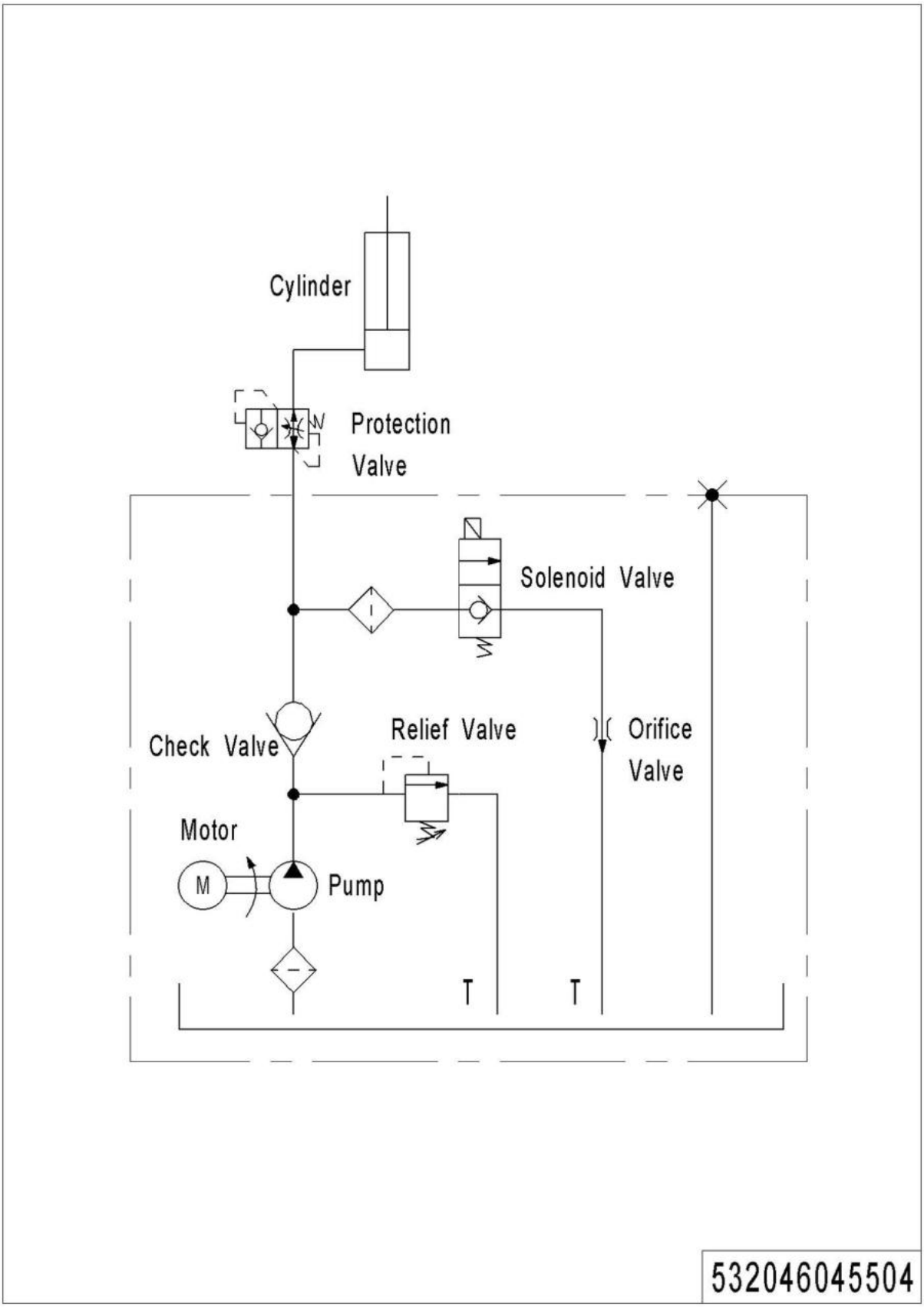

04 Consumable Parts List

No.	Item Code	Item Description	Qty.	Chapter/ Section/ Number
1	910700200019	Bearing	10	Chapter 4/03/4.01 Chapter 4/04/10.02
2	940300300005	WheelΦ80x70	4	Chapter 4/03/4.02
3	502398510002	Wheel	4	Chapter 4/03/4
4	532698510001	Seal Kit	1	Chapter 2/01/7
5	531898520014	Carbon Brush	4	Chapter 2/02/9
6	940300300030	WheelΦ100x50	1	Chapter 4/04/10.01
7	910700600001	Bearing	1	Chapter 4/04/15
8	910700700011	Bearing	1	Chapter 4/04/8
9	532298510004	Caster Assembly	1	Chapter 4/04/10
10	940400100043	Air Spring	1	Chapter 4/01/4
11	940500200005	Bushing	2	Chapter 4/01/7
12	920200400033	Proximity Switch	1	Chapter 4/01/13
13	534311010008	Microswitch Kits	1	Chapter 4/02/21
14	534311010007	Microswitch Kits	1	Chapter 4/02/15
15	920200300001	Microswitch	2	Chapter 3/02/18 Chapter 3/03/19
16	920200400032	Proximity Switch	2	Chapter 3/02/22 Chapter 3/03/26
17	920100100006	Fuse	1	Chapter 5/01/13.04
18	920100100004	Fuse	1	Chapter 5/01/13.05
19	920100200002	Fuse	1	Chapter 5/01/13.07

1= Supply as package. 2= Supply with constraints. 3= Phasing-out supply. 4= Supply as assembly. 5= Check other tables.