Parts & Components Manual

Scissor lifts

SC16H/SC16E

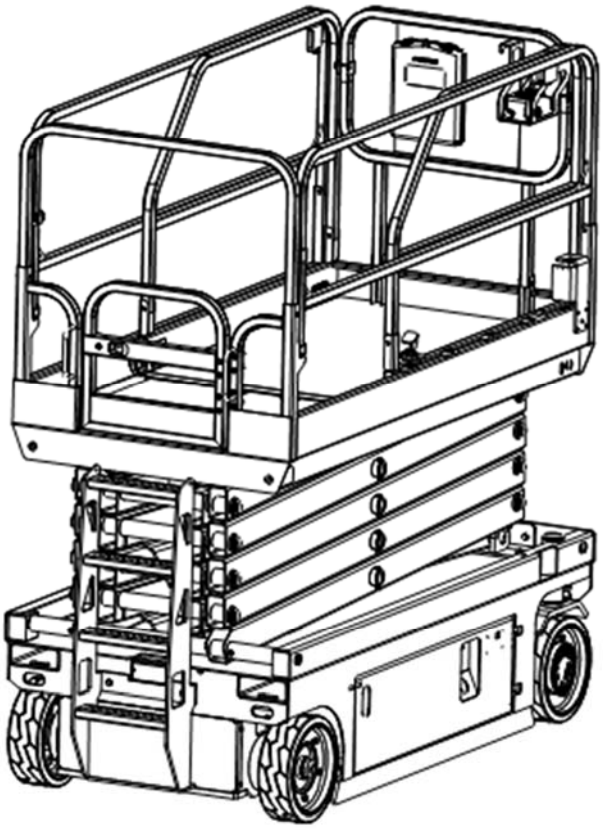

Version 08/2022

SC-BPT-011-EN

Contents

Figure 1.1 Parts and components of chassis (SC16H/ SC16E) 1

Figure 2.1 Pump station box assembly（SC16H） 4

Figure 2.2 Pump station box assembly(SC16E) 7

Figure 3.1 Rear wheel (SC16H) 10

Figure 3.2 Rear wheel (SC16E) 11

Figure 4.1 Pothole protection mechanism(SC16H/SC16E) 13

Figure 5.1 Battery box assembly (SC16H/SC16E) 16

Figure 6.1 Steering mechanism(SC16H) 18

Figure 6.2 Steering mechanism(SC16E) 20

Figure 7.1 Parts and components of scissors(SC16H/SC16E) 22

Figure 8.1 Extended platform assembly(SC16H/SC16E) 25

Figure 9.1 Main platform assembly(SC16H/SC16E) 27

Figure 10.1 Main control valve block(SC16H) 29

Figure 10.2 Main control valve block(SC16E) 31

Figure 11.1 Platform controller components 33

Figure 12.1 Pedal lock(SC16H/SC16E) 35

Figure 13.1 Wiring harness（SC16H） 36

Figure 13.2 Wiring harness（SC16E） 39

Figure 13.3 Weighing device (match) 42

Figure 14.1 Cylinder(SC16H/SC16E） 44

Figure 15.1 Cylinder (SC16H/SC16E) 46

Figure 16.1 Hydraulic circuit diagram（SC16H）.....48

Figure 16.2 Hydraulic circuit diagram（SC16E）.....50

Figure 17.1 Steering Cylinder.....52

Figure 18.1 Hydraulic oil tank.....54

Figure 19.1 Electrical installation assembly (SC16H).....56

Figure 19.2 Electrical installation assembly (SC16E).....58

Figure 1.1 Parts and components of chassis (SC16H/ SC16E)

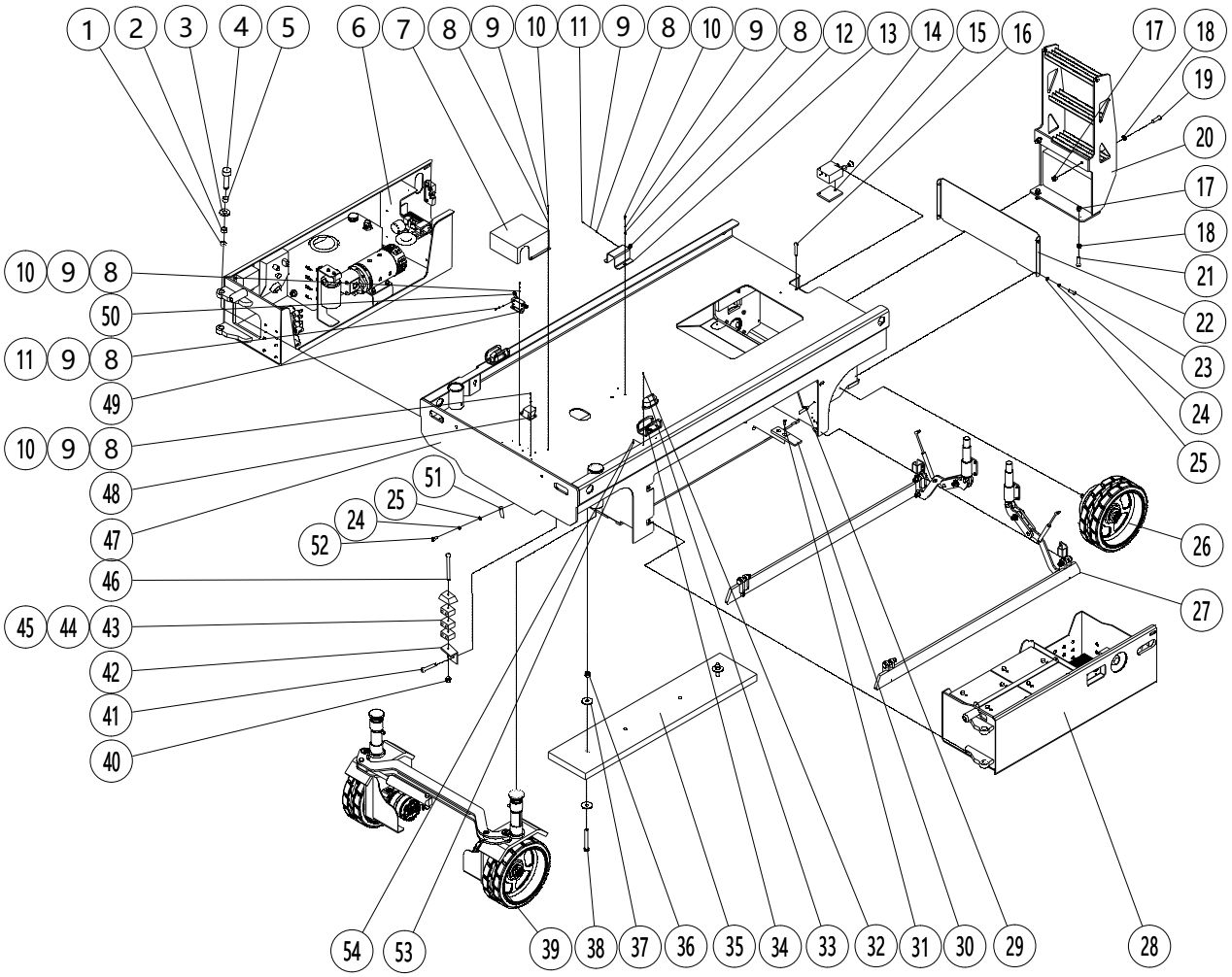

Table 1.1 Parts and components of chassis

NO.	Art No.	Description	Qty.	Note
1	910401300014	Collar	4	
2	940500100023	Composite sleeve	4	
3	940600600001	Washer	4	
4	602021520036	Shaft	4	
5	940500100027	Composite sleeve	4	
6	606510001000	Pump station box	1	Figure 2.1
	607010001000			Figure 2.2
7	602035520000	Fixed box	1	
8	910400100004	Washer	20	
9	910400500004	Washer	20	
10	910200020023	Screw	12	
11	910200500038	Screw	8	
12	920200600003	Limit switch	1	
13	602021520043	Limit plate	1	
14	951000500001	Manual pump	1	
15	602021520040	Cover plate	1	
16	941100200003	Bolt	2	
17	910300500007	Nut	4	
18	910400100009	Washer	4	
19	910200200110	Screw	2	
20	602021510001	Pedal ladder	1	
21	910100300065	Nut	1	
22	606521520040	Cover plate	4	
23	910100300022	Bolt	4	
24	910400500006	Washer	4	
25	910400100006	Washer	4	
26	602098510001	Rear wheel	2	Figure 3.1
	604521510000			Figure 3.2
27	606519501000	Pothole Protection Assembly	2	Figure 4.1
28	606521510001	Battery box assembly	1	
29	602021520050	Shaft	2	
30	602021520037	Block	2	

31	910200400025	Screw	4	
32	910200600009	Screw	2	
33	602035510001	Warning light	2	
34	602021510003	Lampshade	2	
35	606521520041	weight	1	
36	910300500008	Nut	2	
37	910400400003	Washer	4	
38	910100100080	Bolt	2	
39	606516001000	Steering mechanism	1	Figure 6.1
	607016001000			Figure 6.2
40	910300500004	Nut	1	
41	910200200058	Screw	1	
42	602023520001	Support	1	
43	951000200003	Pipe clamp	1	
44	951000200002	Pipe clamp	1	
45	951000200001	Pipe clamp	1	
46	941100400004	Screw	1	
47	606521510000	Chassis	1	
48	602533510000	Sensor	1	
49	602021520042	Limit plate	1	
50	920200600004	Limit switch	1	
51	602021520074	Anti-static belt	1	
52	910200200053	Screw	1	
53	910300500001	Nut	1	
54	910400100003	Washer	4	

Figure 2.1 Pump station box assembly（SC16H）

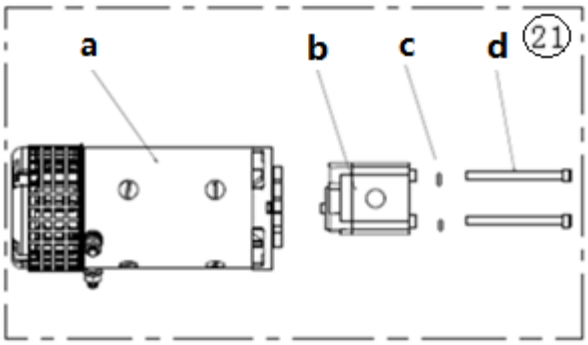

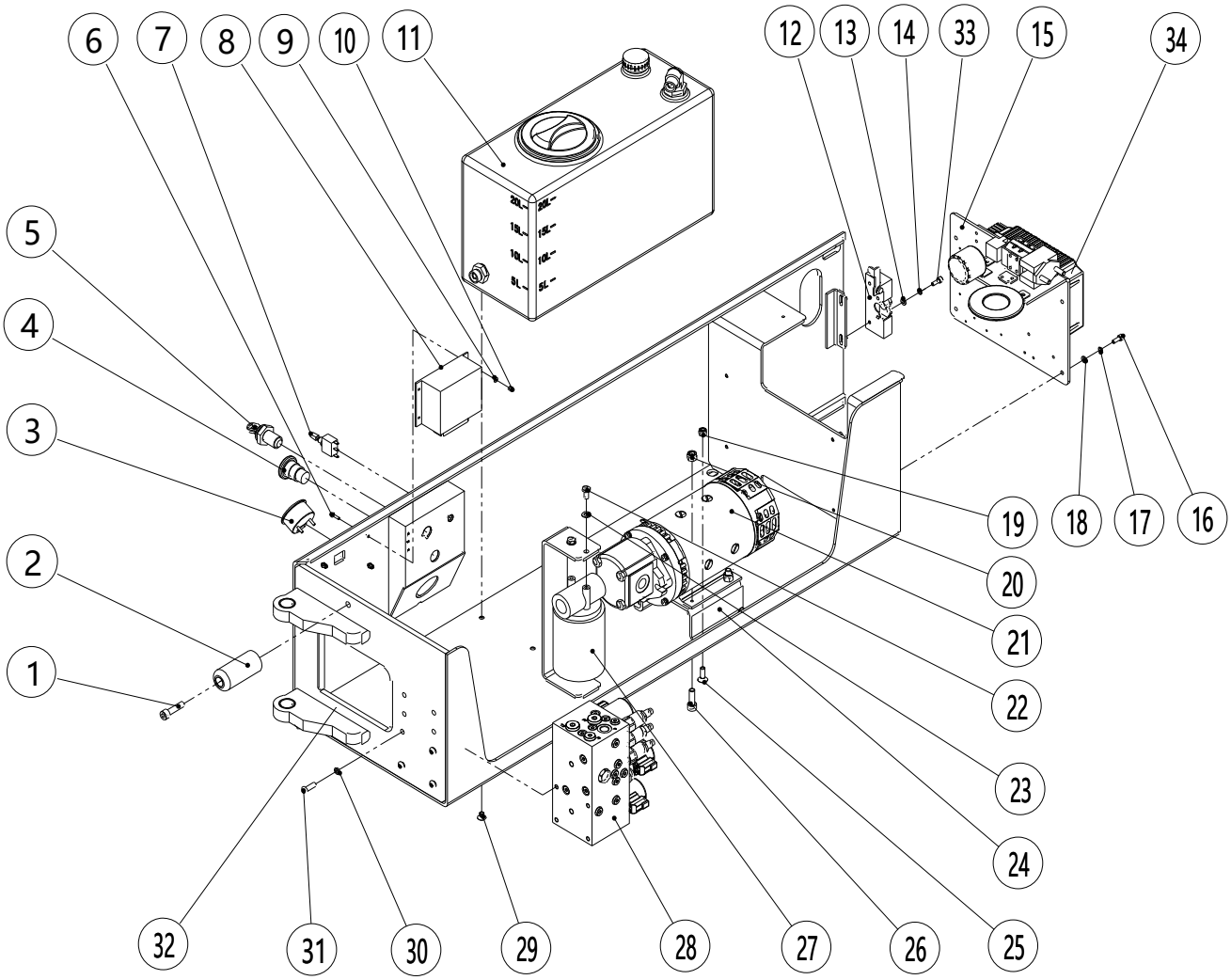

Table 2.1 Pump station box assembly

NO.	Art No.	Description	Qty.	Note
1	910200200079	Screw	1	
2	602010020008	Cushion pad	1	
3	921100100017	Meter	1	
4	920200100017	Emergency stop switch	1	
5	920200200005	Key switch	1	
6	910200600008	Screw	4	
7	920200700005	Button switch	1	
8	921400100022	Controller	1	
9	910400100003	Washer	4	
10	910300500001	Nut	4	
11	602019001001	Oil tank	1	
12	940800300001	Lock body of engineering vehicle	1	
13	910400100004	Washer	10	
14	910400500004	Spring washer	2	
15	606510020003	plate	1	
16	910200200035	Screw	4	
17	910400500005	Washer	4	
18	910400100005	Washer	4	
19	910300500004	Nut	4	
20	910300500005	Nut	4	
21	950900100075	Hydraulic power unit	1	a,b,c,d
22	910100300020	Bolt	2	
23	910400100006	Washer	2	
24	602010020009	Support	1	
25	910200400026	Screw	4	
26	910100300022	Screw	4	
27	951000300001	Return oil filter	1	
28	950600100003	Hydraulic valve group	1	Figure 10.1
29	910200600030	Screw	4	
30	910400500006	Washer	4	
31	910200300026	Screw	4	
32	606510010000	Pump station box	1	

33	910100100005	Bolt	2	
34	606533010007	Electrical assembly	1	Figure 19.1
a	602098520056	Motor	1	
b	606598520002	Pump	1	
c	602098520062	Washer	2	
d	602098520061	Screw	2	

Figure 2.2 Pump station box assembly(SC16E)

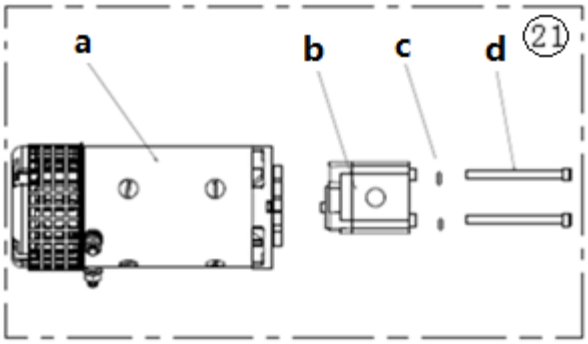

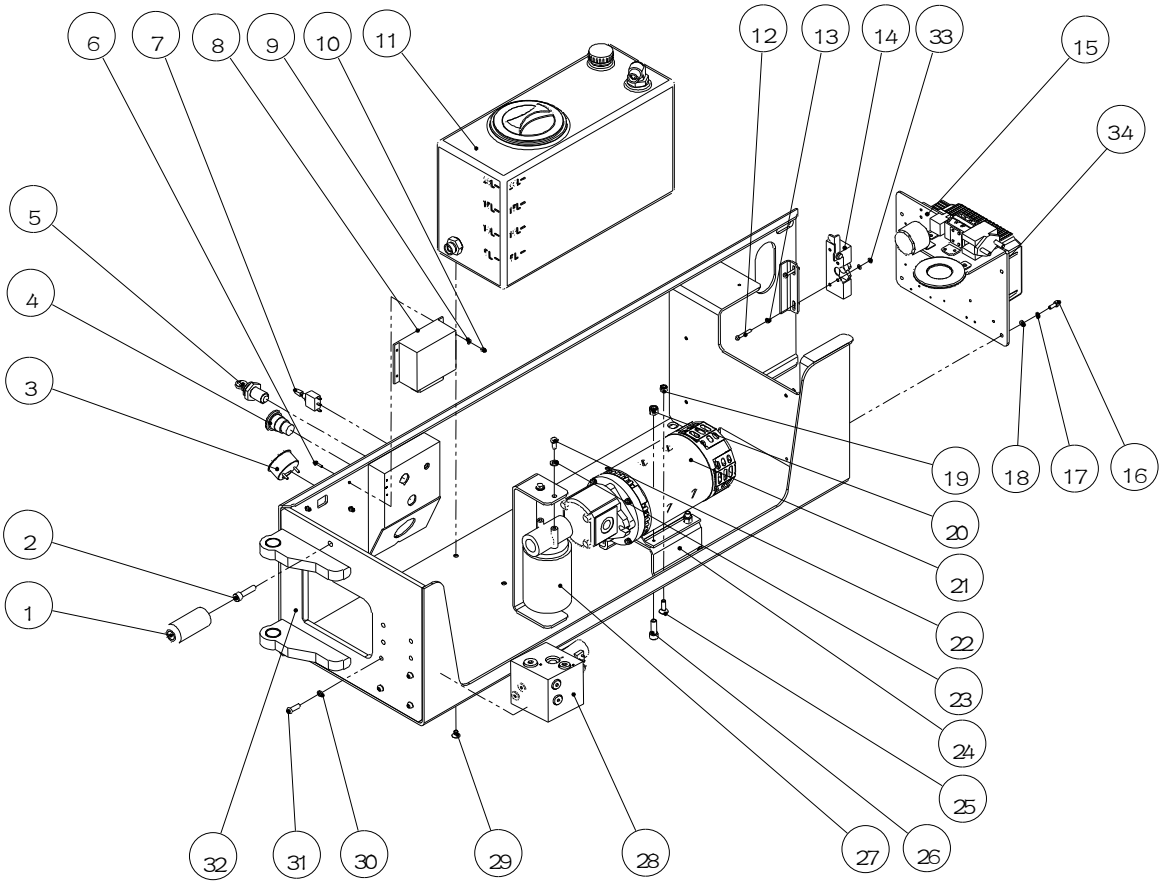

Table 2.2 Pump station box assembly

NO.	Art No.	Description	Qty.	Note
1	910200200079	Screw	1	
2	602010020008	Cushion pad	1	
3	921100100017	Meter	1	
4	920200100017	Emergency stop switch	1	
5	920200200005	Key switch	1	
6	910200600008	Screw	4	
7	920200700005	Button switch	1	
8	921400100022	Controller	1	
9	910400100003	Washer	4	
10	910300500001	Nut	4	
11	602019001001	Oil tank	1	
12	910100100005	Bolt	2	
13	910400100004	Washer	12	
14	940800300001	Lock body of engineering vehicle	1	
15	606510020003	Plate	1	
16	910200200035	Screw	4	
17	910400500005	Washer	4	
18	910400100005	Washer	4	
19	910300500004	Nut	4	
20	910300500005	Nut	4	
21	950900100075	Hydraulic power unit	1	a,b,c,d
22	910100300020	Bolt	2	
23	910400100006	Washer	2	
24	602010020009	Support	1	
25	910200400026	Screw	4	
26	910100300022	Screw	4	
27	951000300001	Return oil filter	1	
28	950600100009	Hydraulic valve group	1	Figure 10.2
29	910200600030	Screw	4	
30	910400500006	Washer	4	
31	910200300026	Screw	4	
32	606510010000	Pump station box	1	

33	910300500002	Nut	2	
34	607033010004	Electrical assembly	1	Figure 19.2
a	602098520056	Motor	1	
b	606598520002	Pump	1	
c	602098520062	Washer	2	
d	602098520061	Screw	2	

Figure 3.1 Rear wheel (SC16H)

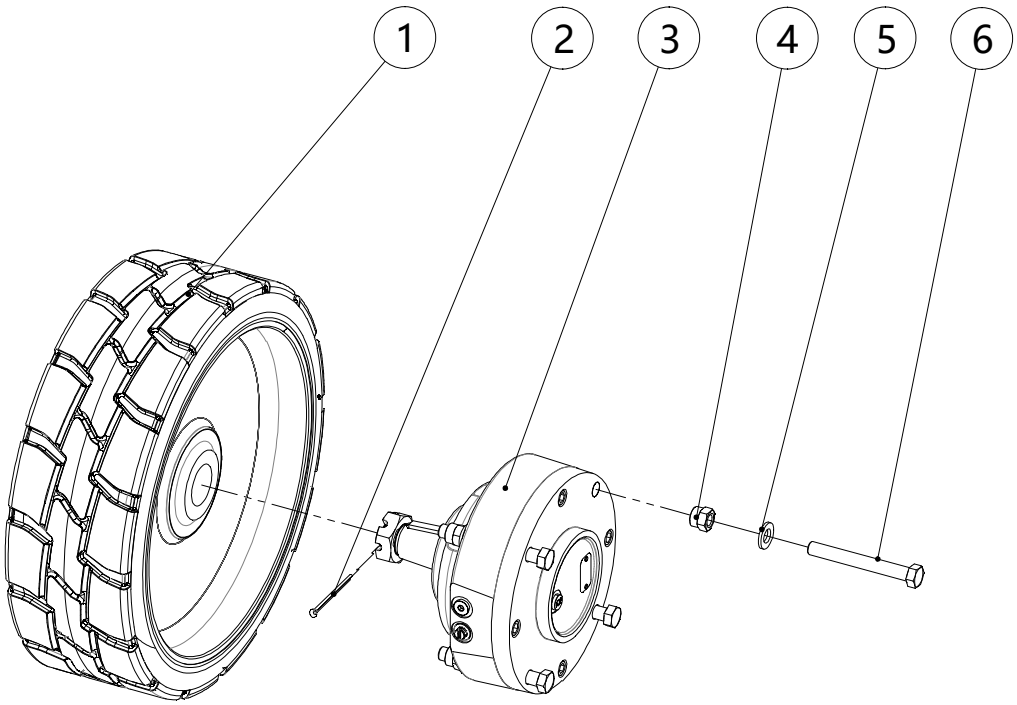

Table 3.1 Rear wheel

NO.	Art No.	Description	Qty.	Note
1	940300400004	Driving wheel	1	
2	910600600045	Pin	1	
3	940700200001	Brake	1	
4	910300500006	Nut	4	
5	910400100008	Washer	4	
6	941100200004	Bolt	4	

Figure 3.2 Rear wheel (SC16E)

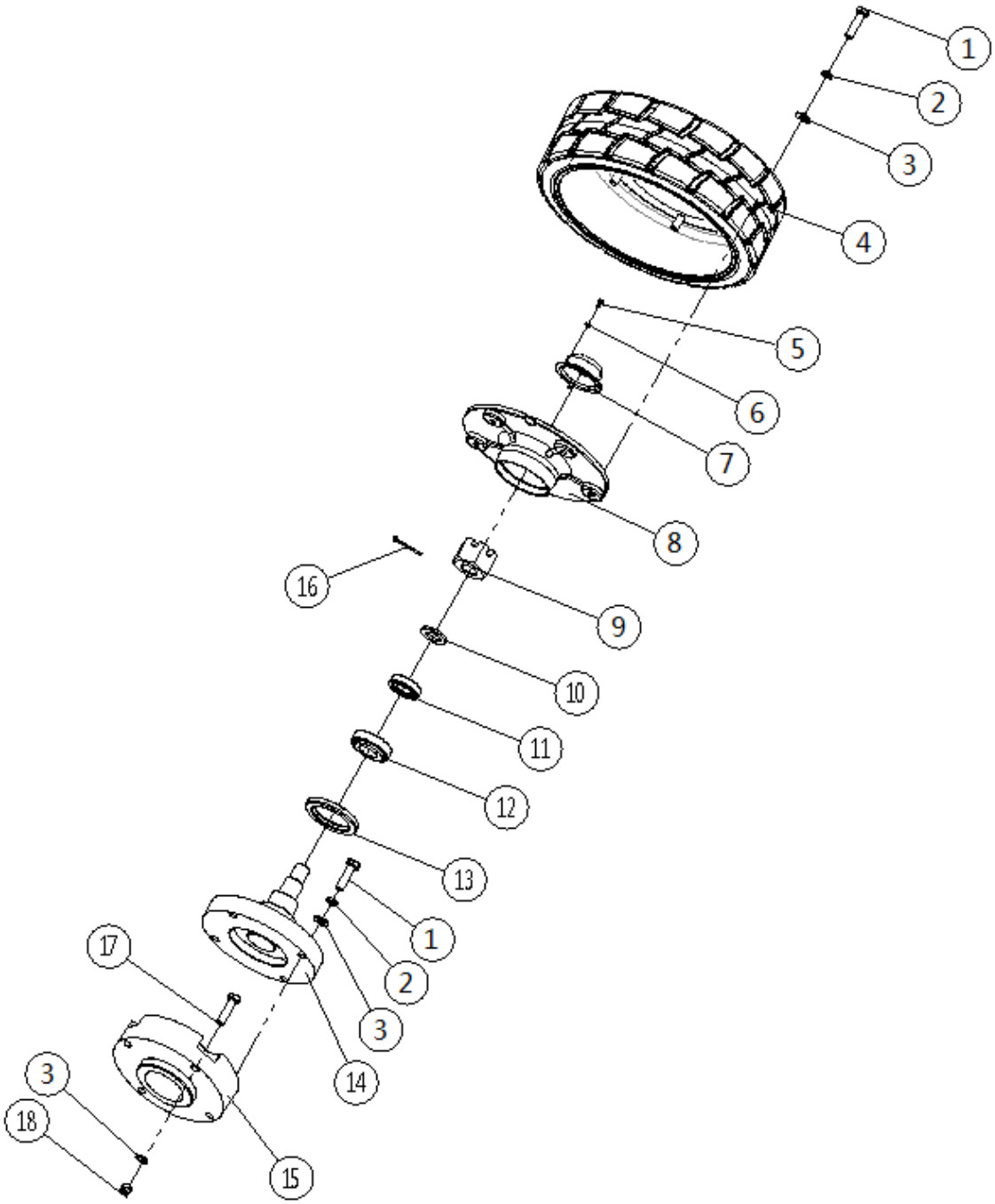

Table 3.2 Rear wheel

NO.	Art No.	Description	Qty.	Note
1	941100200006	Bolt	9	
2	910400500008	Washer	9	
3	910400100008	Washer	13	
4	940300400006	Wheel	1	
5	910200500021	Screw	3	
6	910400500003	Washer	3	
7	604521520004	Cap	1	
8	604521520003	Wheel hub	1	
9	910301600001	Nut	1	
10	910400100014	Washer	1	
11	910700600026	Bearing	1	
12	910700600029	Bearing	1	
13	910800700003	Oil seal	1	
14	604521510001	Shaft seat	1	
15	604521520000	Brace	1	
16	910600600045	Cotter	1	
17	941100200005	Bolt	4	
18	910300500006	Nut	4	

Figure 4.1 Pothole protection mechanism(SC16H/SC16E)

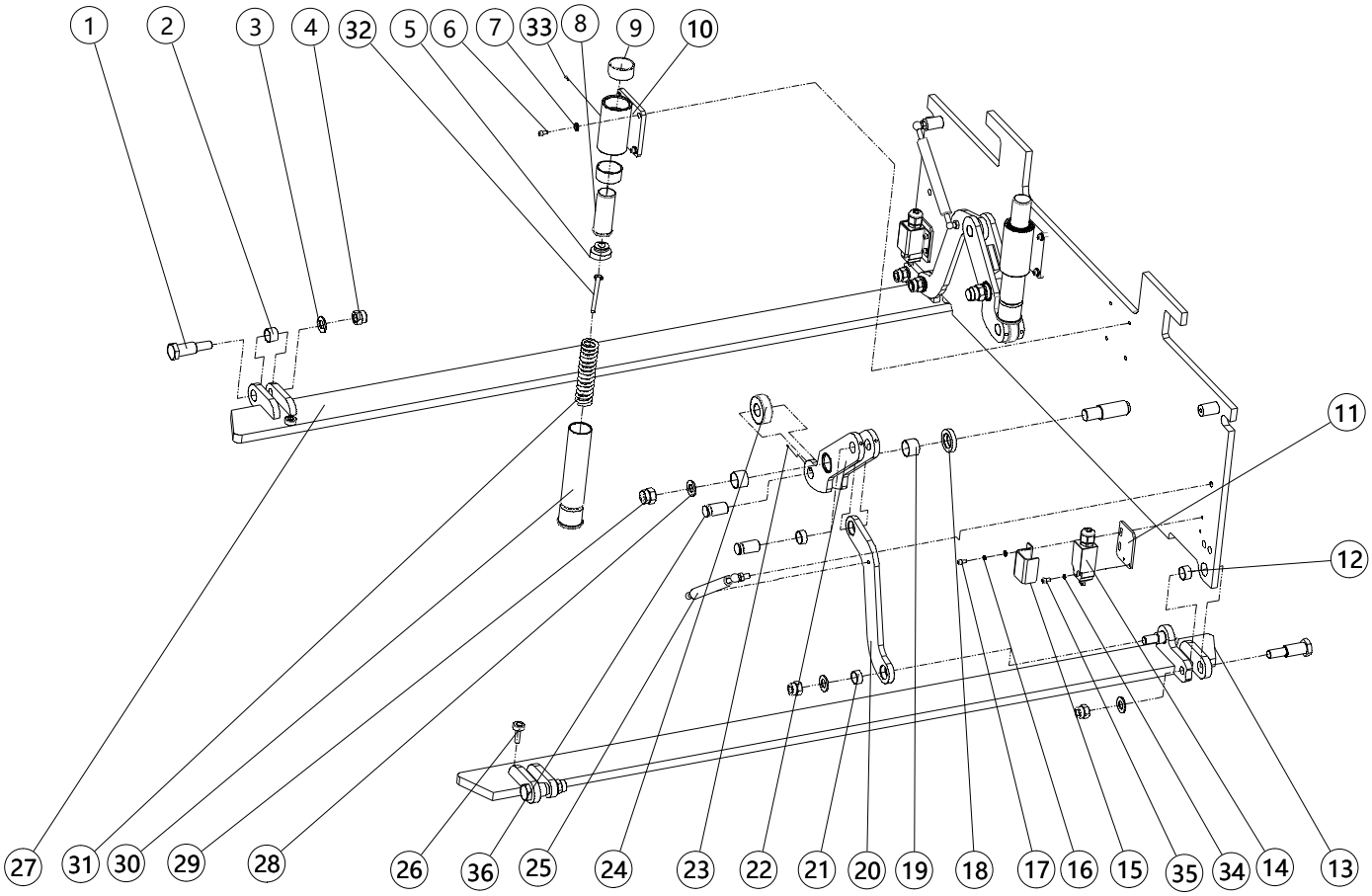

Table 4.1 Pothole protection mechanism

NO.	Art No.	Description	Qty.	Note
1	602019520019	Shaft	4	
2	940500100017	Composite sleeve	2	
3	910400100009	Washer	10	
4	910300500007	Nut	10	
5	602019520029	Gland	2	
6	910200200058	Screw	8	
7	910400500006	Spring washer	8	
8	602019520018	Shaft	2	
9	940500100040	Composite sleeve	4	
10	602019510002	Guide sleeve	2	
11	602019520022	Switch board	2	
12	940500100015	Composite sleeve	2	
13	606519510000	Support Plate	1	
14	920200600005	Limit switch	2	
15	602019520020	Protection cover	2	
16	910400500004	Spring washer	4	
17	910200300012	Screw	4	
18	602019520005	Washer	2	
19	940500100027	Composite sleeve	4	
20	602019520012	Connecting rod	2	
21	940500100014	Composite sleeve	4	
22	602019510001	Connecting rod	2	
23	910200900009	Screw	4	
24	602019520009	Roller	2	
25	940400100005	Air spring	2	
26	602019520021	Cushion pad	4	
27	606519510001	Support Plate	1	
28	910400100012	Washer	2	
29	910300500010	Nut	2	
30	602019520030	Press rod sleeve	2	

31	602019520028	Spring	2	
32	941100400003	Screw	2	
33	911200100002	Oil cup	2	
34	910400100004	Washer	8	
35	910200200027	Screw	4	
36	602019520011	Pin shaft	4	

Figure 5.1 Battery box assembly (SC16H/SC16E)

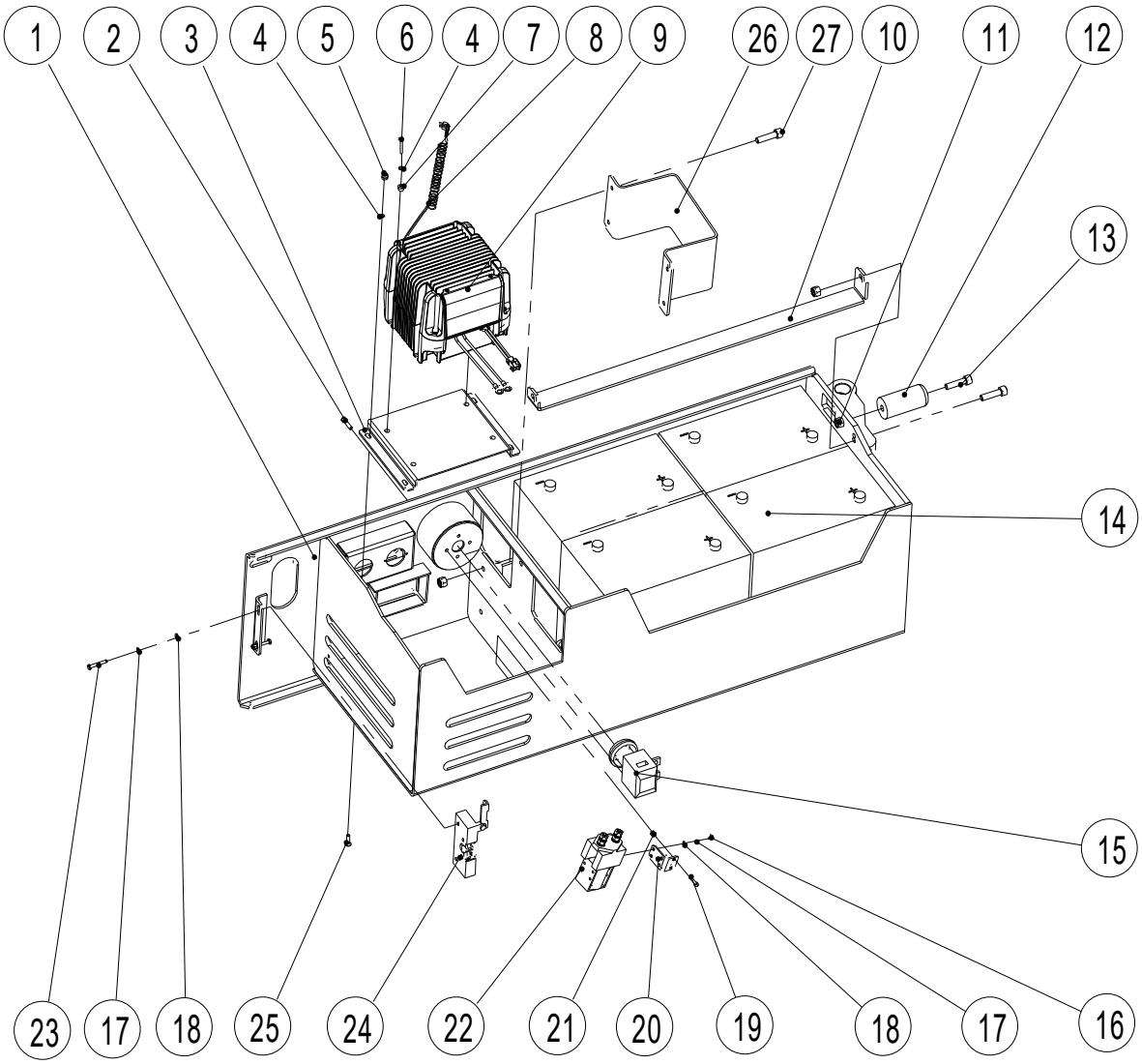

Table 5.1 Battery box assembly

NO.	Art No.	Description	Qty.	Note
1	606521510001	Battery box	1	
2	910200300012	Screw	2	
3	602021520073	Plate	1	
4	910400100005	Washer	10	
5	910300500003	Nut	4	
6	910200200036	Screw	4	
7	910300500004	Nut	10	
8	921500200020	Spring line	1	(Asian)
	921500200017			(Europe)
	921500200014			(America)
	921500200015			(Australia)
	921500200018			(Italy)
	921500200019			(Switzerland)
	921500200016			(Britain)
	921500200036			(Israel)
	921500200041			(Afghanistan)
	921500200069			(Brazil)
9	606536510002	Charger	1	SC16H/SC16E
10	606521520034	Plate	1	
11	910300500005	Nut	1	
12	602010020008	Cushion pad	1	
13	910200200079	Screw	1	
14	920600100023	Battery	4	SC16H/SC16E
15	920200100004	Emergency stop switch	1	
16	910200500037	Screw	2	
17	910400500004	Washer	6	
18	910400100004	Washer	6	
19	910200400012	Screw	2	
20	921300400005	Fixing plate	1	
21	910300500002	Nut	4	SC16E
22	920700100009	Contactor	1	SC16E
23	910100100005	Bolt	2	
24	940800300007	Lock body of engineering vehicle	1	
25	910200400018	Screw	4	
26	606521520033	Plate	1	
27	910200200058	Screw	6	

Figure 6.1 Steering mechanism(SC16H)

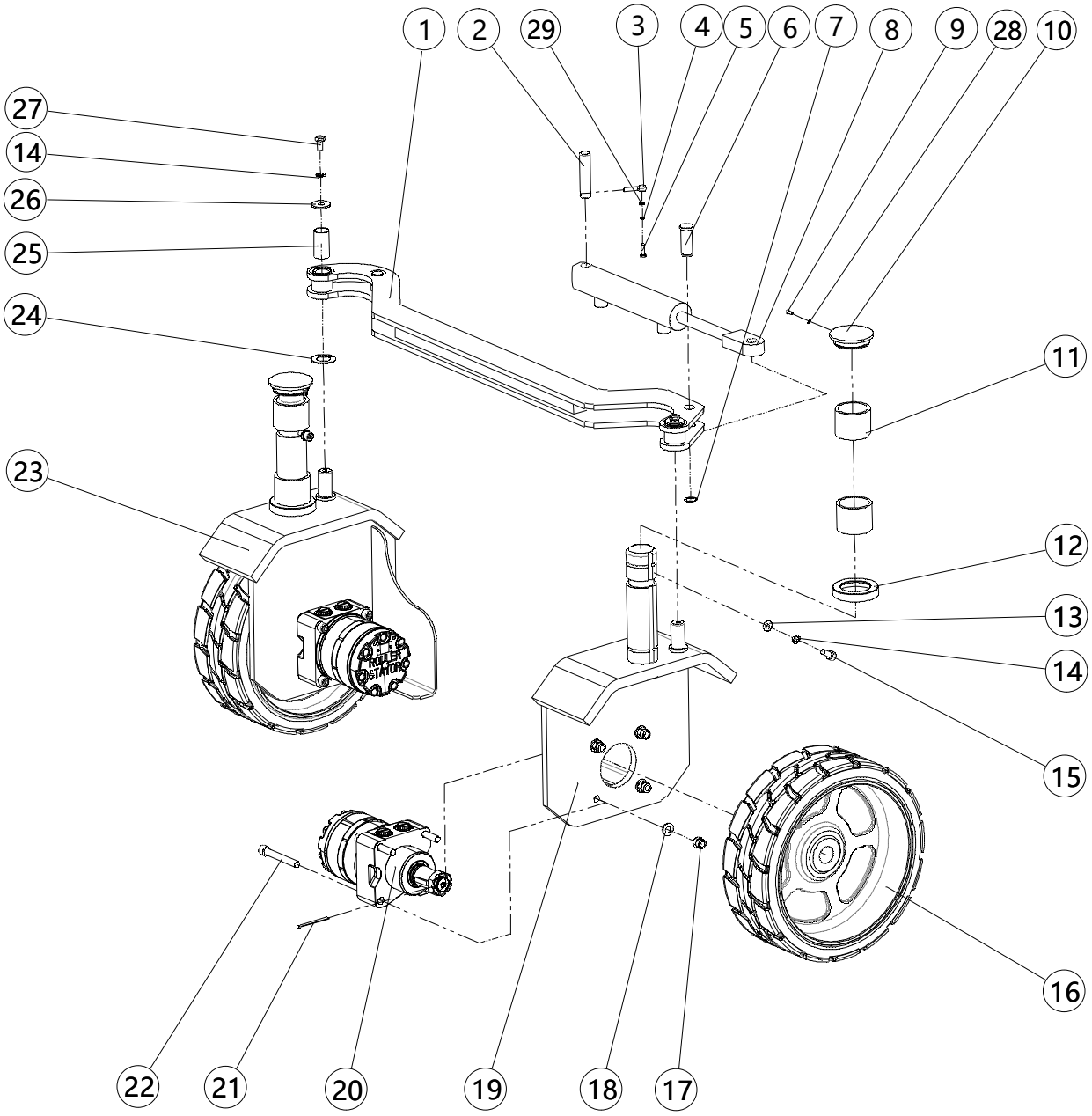

Table 6.1 Steering mechanism(SC16H)

NO.	Art No.	Description	Qty.	Note
1	606516010000	Connecting rod	1	
2	602016020007	Pin shaft	1	
3	602016020008	Pin	1	
4	910400500005	Spring washer	1	
5	910100300011	Bolt	1	
6	602016020005	Pin shaft	1	
7	910401300011	Collar	1	
8	606523501010	Cylinder	1	Figure17.1
9	910200300012	Screw	2	
10	602016020006	End cover	2	
11	940500300003	Bearing	4	
12	602015520000	Gasket	2	
13	910400100007	Washer	2	
14	910400500007	Spring washer	4	
15	910200200075	Screw	2	
16	940300400004	Driving wheel	2	
17	910300500006	Nut	8	
18	910400100008	Washer	8	
19	602015510001	Wheel carrier	1	
20	950800100002	Brake	2	
21	910600600045	pin	2	
22	941100400005	Screw	8	
23	602015510000	Wheel carrier	1	
24	940600600001	Washer	2	
25	940500100056	Composite sleeve	2	
26	910400200004	Washer	2	
27	910100300035	Bolt	2	
28	910400500004	Washer	1	
29	910400100005	Washer	1	

Figure 6.2 Steering mechanism(SC16E)

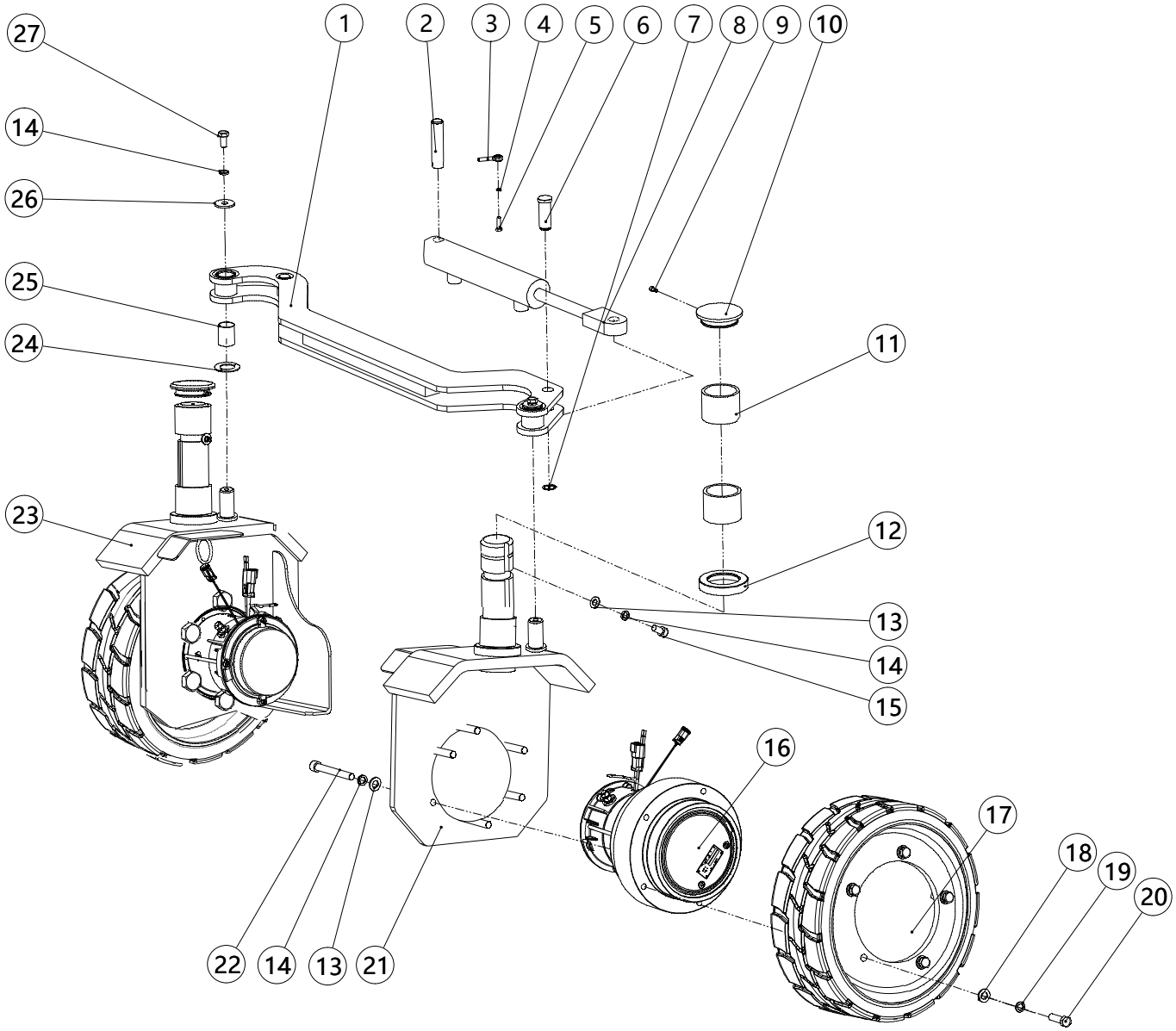

Table 6.2 Steering mechanism

NO.	Art No.	Description	Qty.	Note
1	606516010000	Connecting rod	1	
2	602016020007	Pin shaft	1	
3	602016020008	Pin	1	
4	910400500004	Washer	1	
5	910100300011	Bolt	1	
6	602016020005	Pin shaft	1	
7	910401300011	Ring-round	1	
8	606523501010	Cylinder	1	Figure 17.1
9	910200300012	Screw	2	
10	602016020006	End cover	2	
11	940500300003	Bearing	4	
12	602015520000	Gasket	2	
13	910400100007	Washer	14	
14	910400500007	Washer	16	
15	910200200075	Screw	2	
16	602098520004	Reducer	2	
17	940300100006	Driving wheel	2	
18	910400100008	Washer	10	
19	910400500008	Washer	10	
20	910100400019	Bolt	10	
21	604515520004	Wheel carrier	1	
22	941100200003	Bolt	12	
23	604515510000	Wheel carrier	1	
24	940600600001	Gasket	2	
25	940500100056	Composite sleeve	2	
26	910400200004	Washer	2	
27	910100300035	Bolt	2	

Figure 7.1 Parts and components of scissors(SC16H/SC16E)

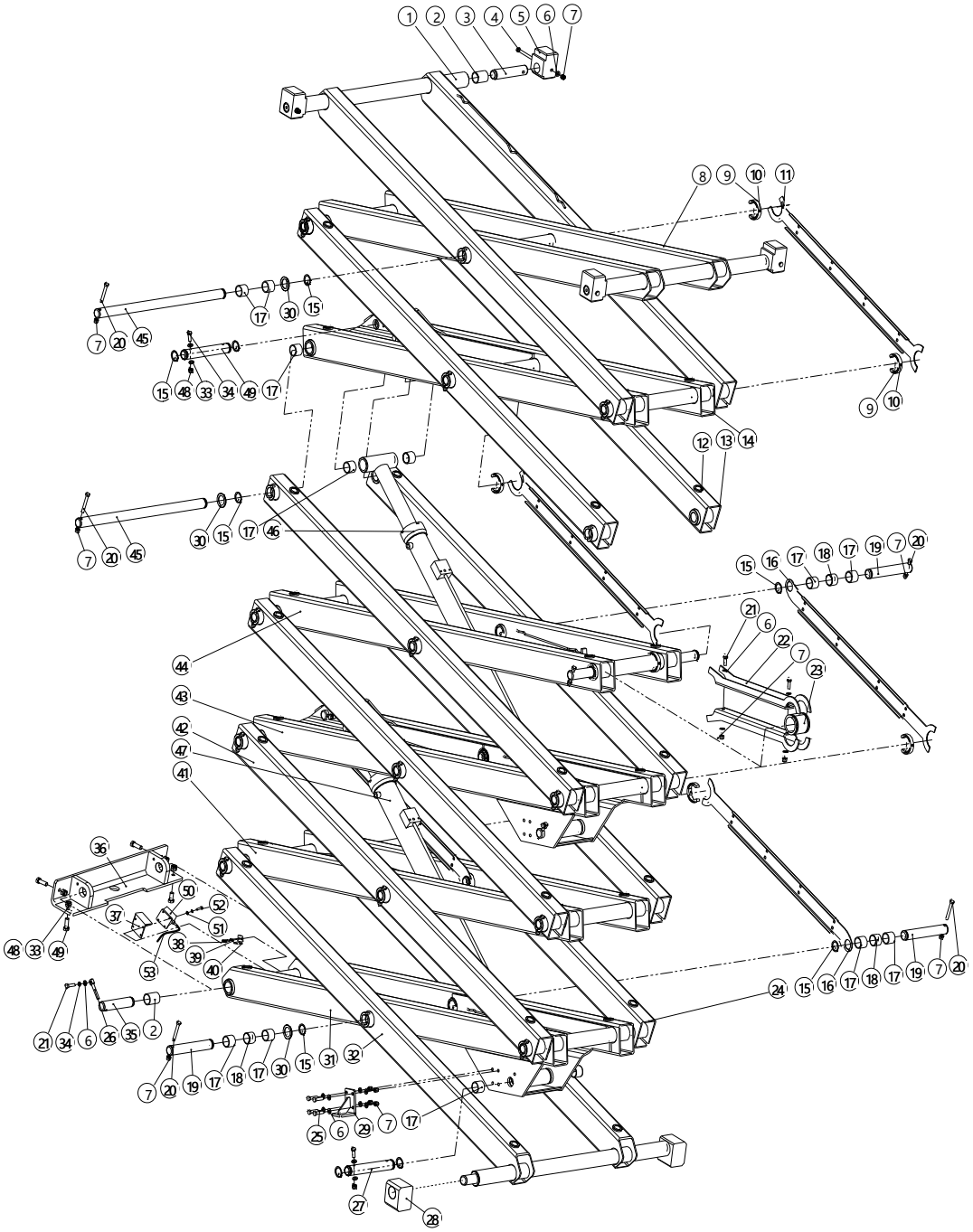

Table 7.1 Parts and components of scissors (SC16H/SC16E)

NO.	Art No.	Description	Qty.	Note
1	606553010011	Scissors	1	
2	940500300002	Bearing	6	
3	602053020024	Shaft	4	
4	910100100042	Bolt	4	
5	602053020029	Slider	4	
6	910400100007	Washer	27	
7	910300500005	Nut	36	
8	606553010006	Scissors	1	
9	602053020039	Collar	7	
10	910200600008	Screw	7	
11	602053020034	Fixed Plate	2	
12	602053020038	Cushion pad	40	
13	606553010008	Scissors	1	
14	606553010005	Scissors	1	
15	910401600001	Collar	28	
16	602053020033	Fixed Plate	3	
17	940500300001	Bearing	48	
18	602053020040	Spacer sleeve	8	
19	602053020026	Shaft	8	
20	910100100038	Bolt	22	
21	910100300037	Bolt	7	
22	602053020035	Support arm	4	
23	602053020036	Slider sleeve	4	
24	606553010010	Scissors	3	
25	910200200078	Screw	8	
26	602053020041	Shaft	1	
27	606553020028	Shaft	1	

28	602053020030	Slider	2	
29	602053010009	Press rod	2	
30	602053020037	Washer	17	
31	606553010001	Scissors	1	
32	606553010007	Scissors	1	
33	910400500007	Spring washer	3	
34	910200200177	Bolt	4	
35	606553020030	Shaft	1	
37	602053020031	Fixed Plate	1	
38	910200200023	Screw	2	
39	910400500004	Washer	6	
40	602053020032	Contact Plate	1	
41	606553010002	Scissors	1	
42	606553010009	Scissors	4	
43	606553010003	Scissors	1	
44	606553010004	Scissors	1	
45	606553020029	Shaft	12	
46	606523501009	Cylinder	1	Figure14.1
47	606523501008	Cylinder	1	Figure15.1
48	910300500006	Nut	4	
49	606553020027	Shaft	3	
50	910200200022	Screw	4	
51	910400100004	Washer	4	
52	602066010000	Sensor	1	
53	602066010001	Wiring harness	1	

Figure 8.1 Extended platform assembly(SC16H/SC16E)

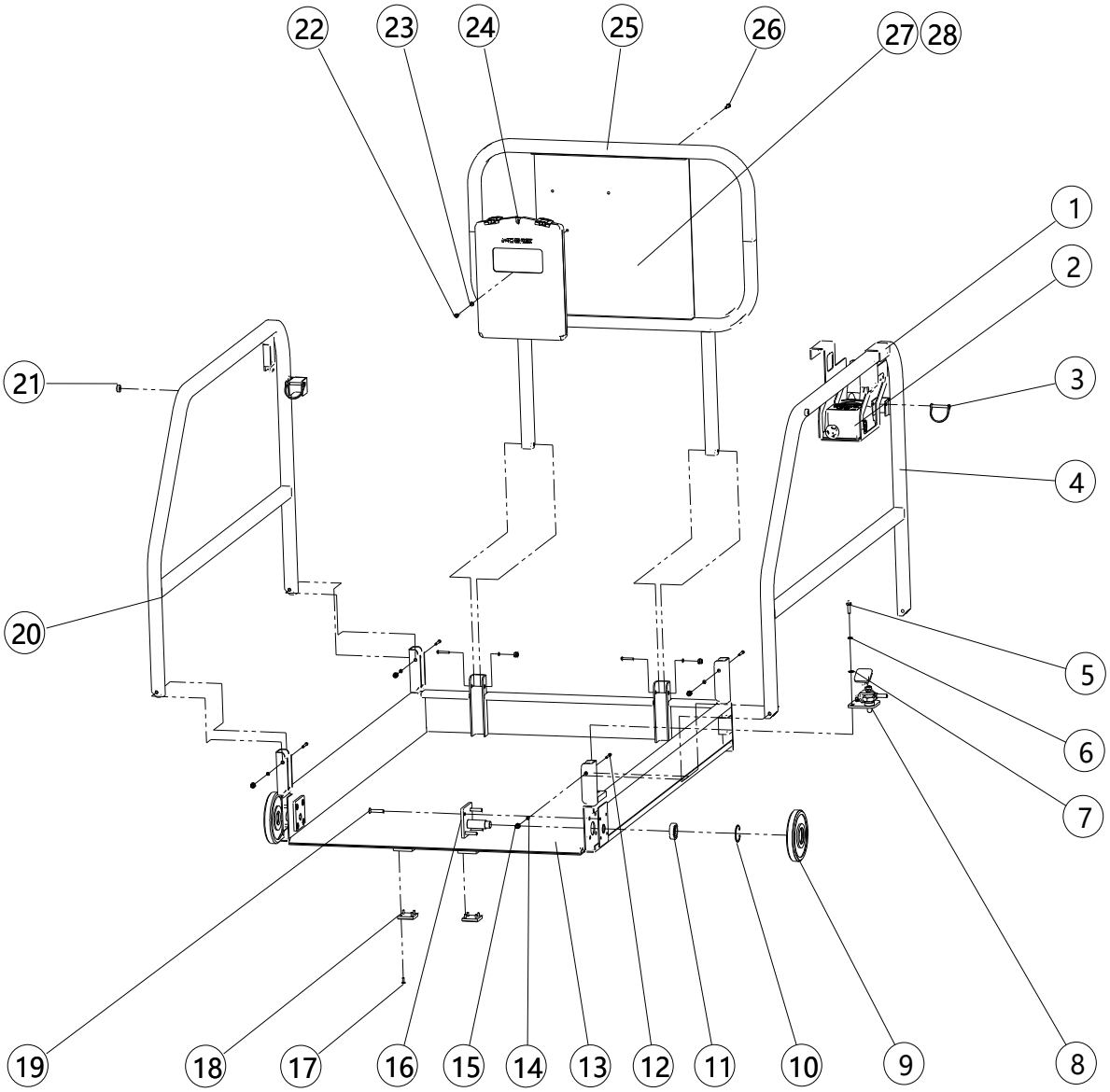

Table 8.1 Extended platform assembly

NO.	Art No.	Description	Qty.	Note
1	602011010000	Hanging Plate	1	
2	922100100004	Controller	1	
3	602053501003	Steel wire sleeve	2	
4	602053510008	Rail	1	
5	910100300022	Bolt	2	
6	910400500006	Washer	2	
7	910400100006	Washer	2	
8	602053501007	Pedal lock	1	
9	602053520073	Roller	2	
10	910401400013	Collar	2	
11	910700200019	Bearing	2	
12	910100100026	Bolt	6	
13	606553510002	Platform	1	
14	910400100006	Washer	12	
15	910300500004	Nut	6	
16	602053510009	Mounting seat	3	
17	910200200032	Screw	8	
18	602053520066	Steeping	2	
19	910200400031	Screw	8	
20	602053510007	Rail	1	
21	602019520021	Cushion pad	2	
22	910300500003	Nut	3	
23	910400100005	Washer	3	
24	610053520093	File box	1	
25	602053510006	Rail	1	
26	910200500052	Screw	4	
27	602053520067	Hanging plate	1	
28	910500200003	Rivet	4	
29	910200300016	Screw	4	
30	602053520086	Plate	1	

Figure 9.1 Main platform assembly(SC16H/SC16E)

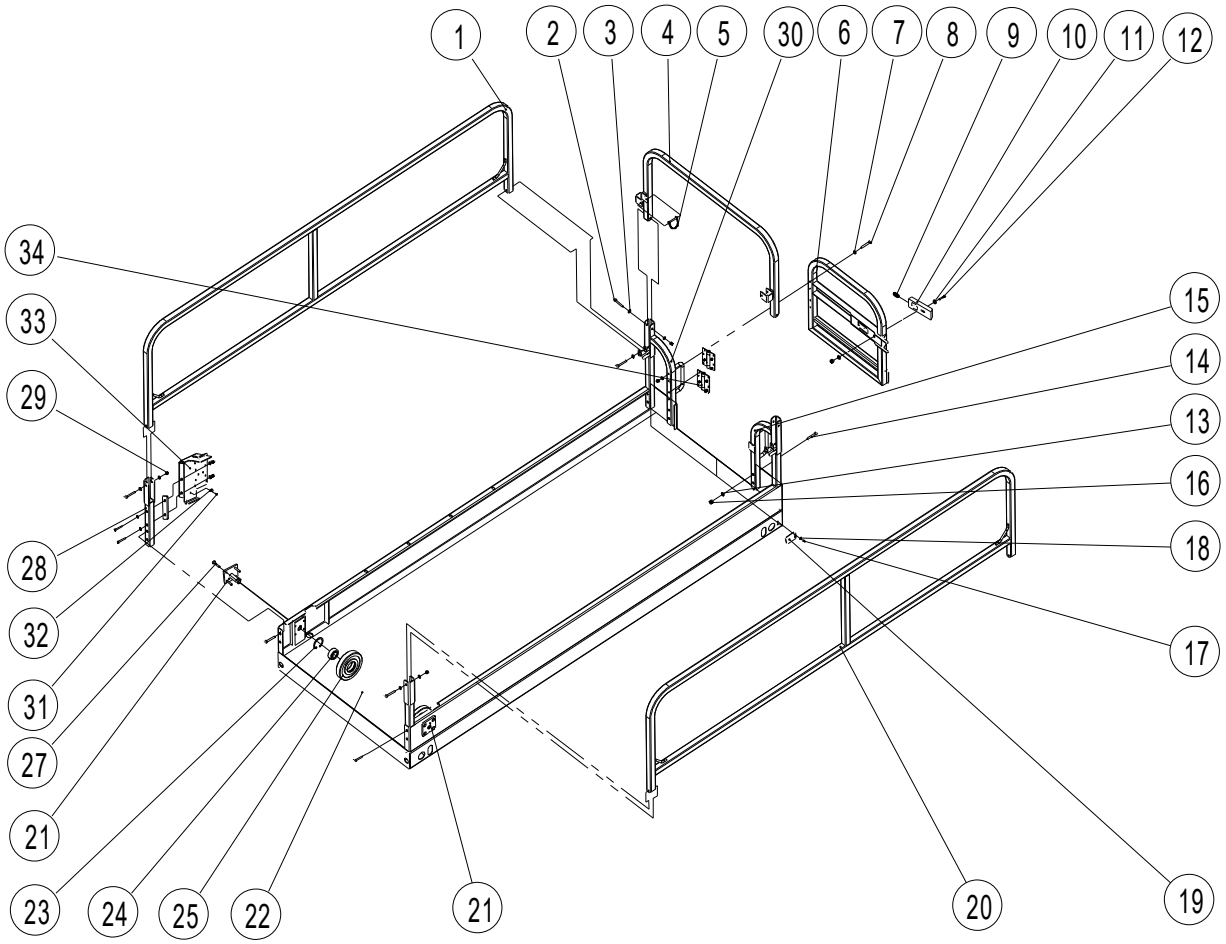

Table 9.1 Main platform assembly

NO.	Art No.	Description	Qty.	Note
1	606553510009	Rail	1	
2	910100100026	Bolt	8	
3	910400100006	Washer	16	
4	606553510007	Rail	1	
5	602053501003	Steel wire sleeve	2	
6	602053510004	Doorframe	1	
7	910400100004	Washer	16	
8	910100100007	Screw	8	
9	602053520037	Spring	1	
10	602053520036	Door lock	1	
11	910400100006	Washer	1	
12	910100100025	Screw	4	
13	910400100007	Washer	12	
14	941100100002	Screw	12	
15	606553510003	Rail	1	
16	910300500005	Nut	12	
17	910200300016	Screw	4	
18	910400100005	Washer	4	
19	602053520085	Plate	2	
20	606553510008	Rail	1	
21	602053510009	Mounting seat	1	
22	606553510001	Main platform	1	
23	910401400013	Collar	2	
24	910700200019	Bearing	2	
25	602053520072	Roller	2	
27	910200400029	Screw	8	
28	606553510006	Rail	12	
29	910300500004	Nut	9	
30	606553510004	Rail	1	
31	910200500036	Screw	1	
32	921300200001	Cable fastener	1	
33	602053520071	Plate	1	
34	602053520090	Spring hinge 1	1	
	602053520091	Spring hinge 2	1	

Figure 10.1 Main control valve block(SC16H)

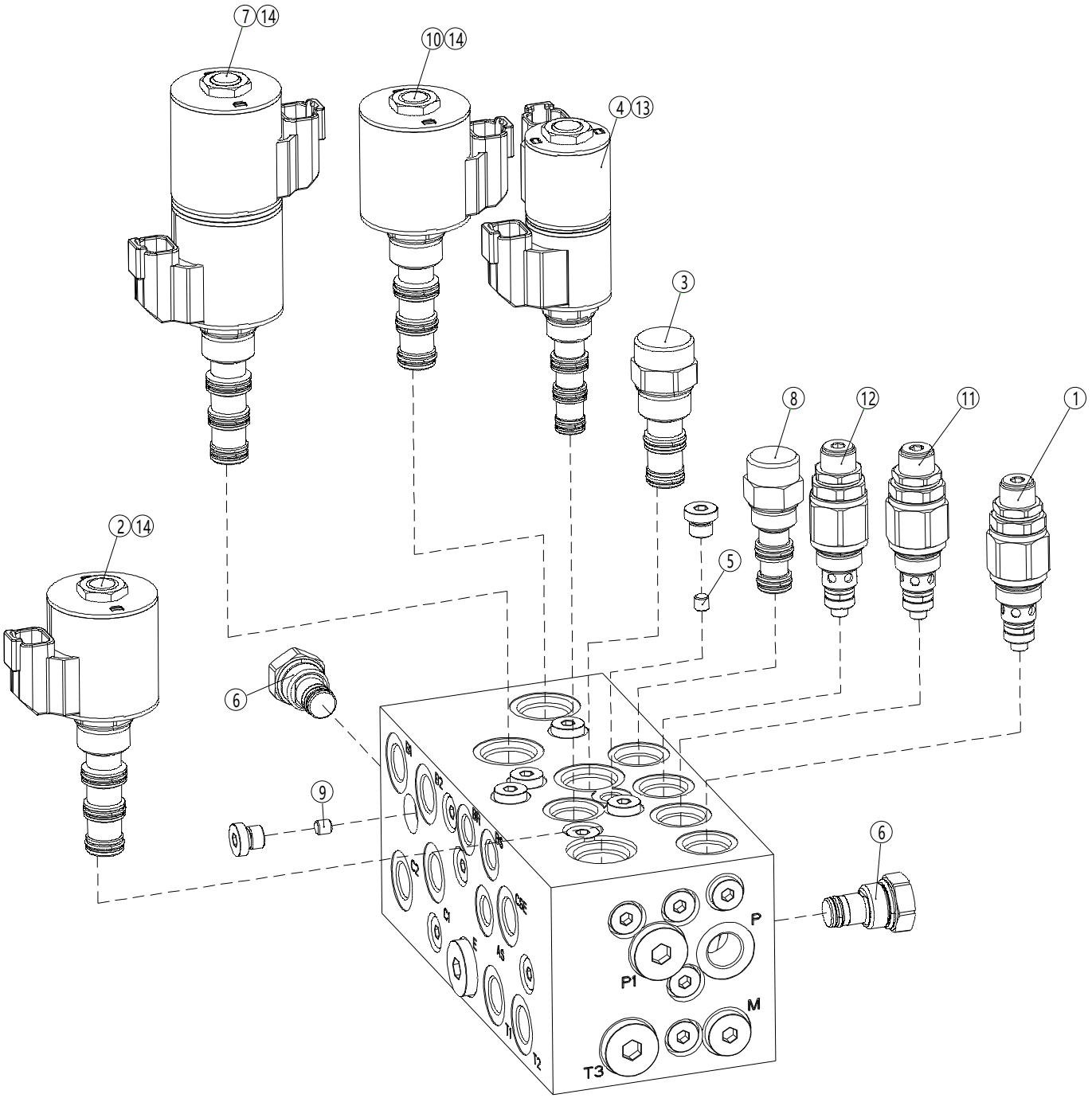

Table 10.1 Main control valve block

NO.	Art No.	Description	Qty.	Note
1	602098520005	Overflow valve	1	
2	602098520006	Solenoid valve	1	
3	602098520007	Priority valve	1	
4	602098520008	Solenoid valve	1	
5	602098520027	Damping	1	
6	602098520009	One-way valve	2	
7	602098520010	Solenoid valve	1	
8	602098520011	Compensating valve	1	
9	602098520012	Damping	1	
10	602098520013	Solenoid valve	1	
11	602098520014	Overflow valve	1	
12	602098520015	Overflow valve	1	
13	602098520016	Coil	2	
14	602098520017	Coil	4	

Figure 10.2 Main control valve block(SC16E)

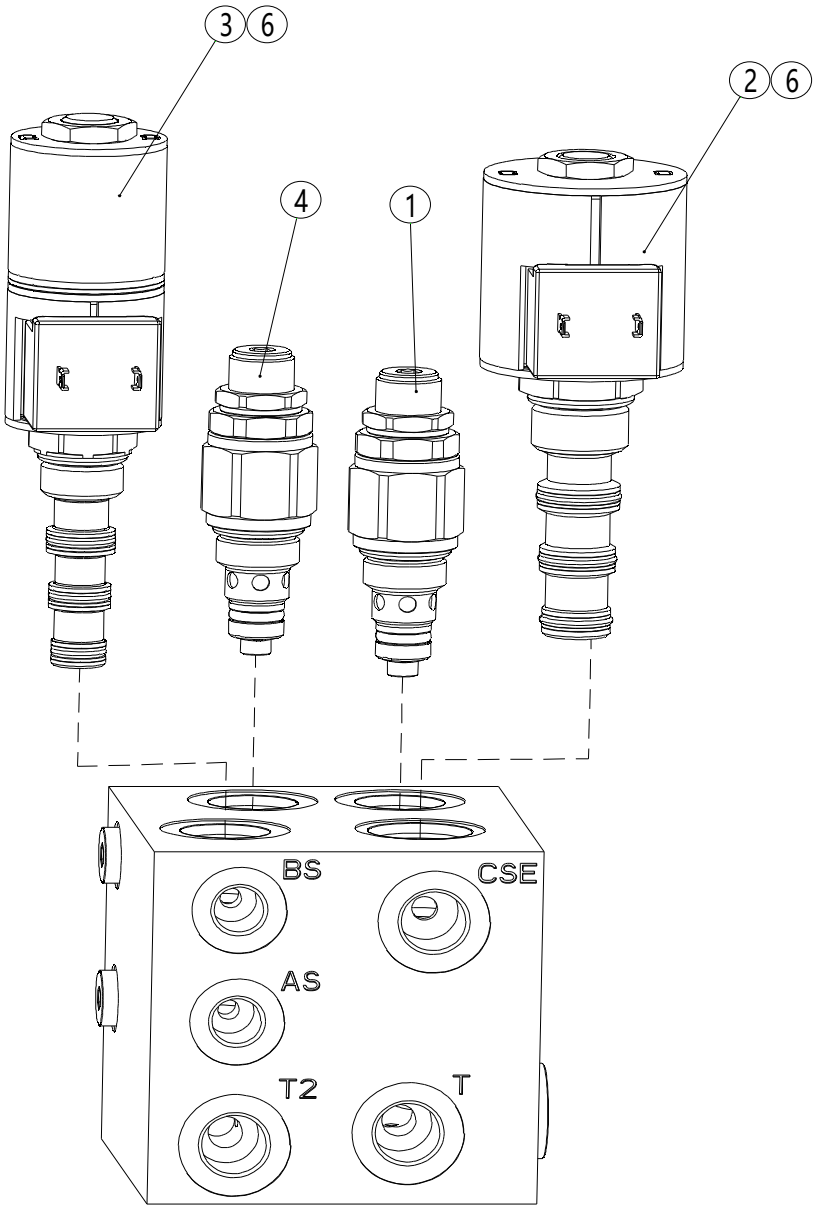

Table 10.2 Main control valve block

NO.	Art No.	Description	Qty.	Note
1	602098520005	Overflow valve	1	
2	602098520006	Solenoid valve	1	
3	602098520008	Solenoid valve	1	
4	602098520015	Overflow valve	1	
5	602098520018	Coil	1	
6	602098520019	Coil	2	

Figure 11.1 Platform controller components

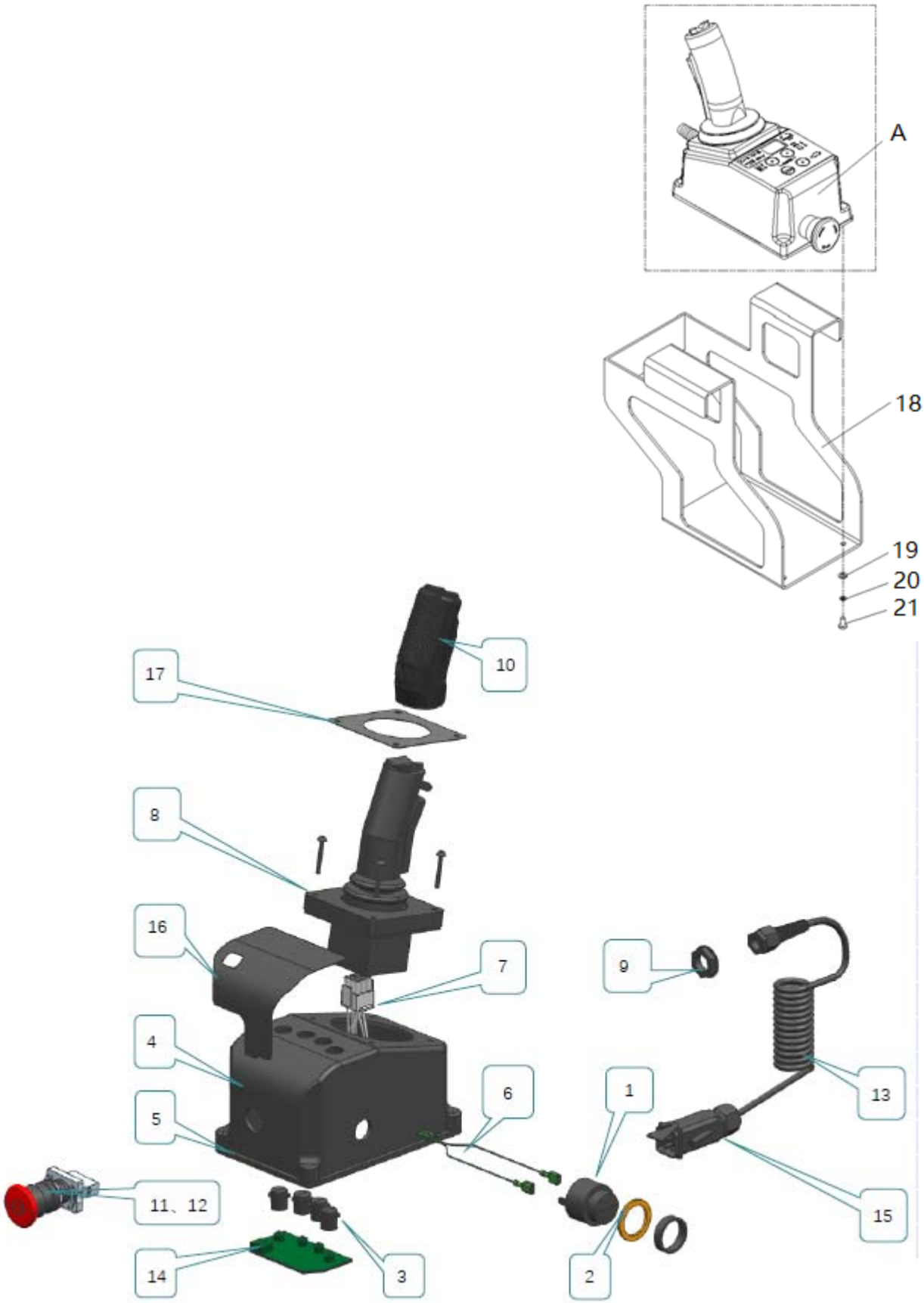

Table 11.1 Platform controller components

NO.	Art No.	Description	Qty.	Note
1	602098520035	Buzzer	1	
2	602098520068	Washer	1	
3	602098520037	Button	4	
4	602098520040	Controller box	1	
5	602098520041	Bottom cover	1	
6	602098520069	Harness	1	
7	602098520070	Harness	1	
8	602098520032	Control handle	1	
9	602098520071	Nut	1	
10	602098520067	Silicon rubber case	1	
11	602098520034	Emergency stop switch	1	
12	602098520038	Contact block	1	
13	602098520039	Spring line	1	
14	602098520036	Switch	1	
15	602098520072	Connector	1	
16	602098520033	Decal	1	
17	602098520073	Decal	1	
18	602011010000	Hanging plate	1	
19	910400100005	Washer	4	
20	910400500005	Spring washer	4	
21	910200500054	Screw	4	
A	922100100004	Platform controller	1	

Figure 12.1 Pedal lock(SC16H/SC16E)

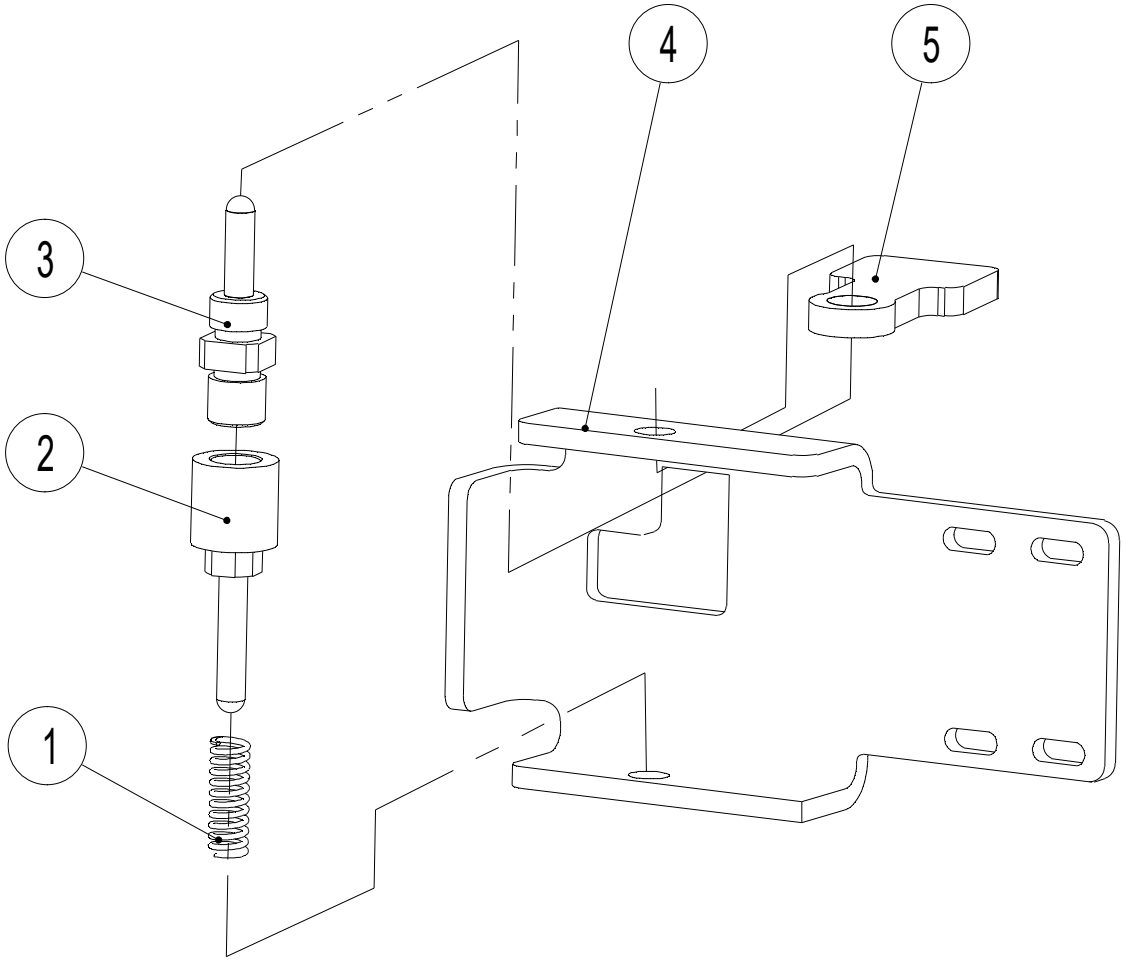

Table 12.1 Pedal lock

NO.	Art No.	Description	Qty.	Note
1	602053520078	Spring	1	
2	600553520040	Pin shaft	1	
3	600553520039	Pin shaft	1	
4	600553520037	Plate	1	
5	600553520038	Plate	1	

Figure 13.1　Wiring harness（SC16H）

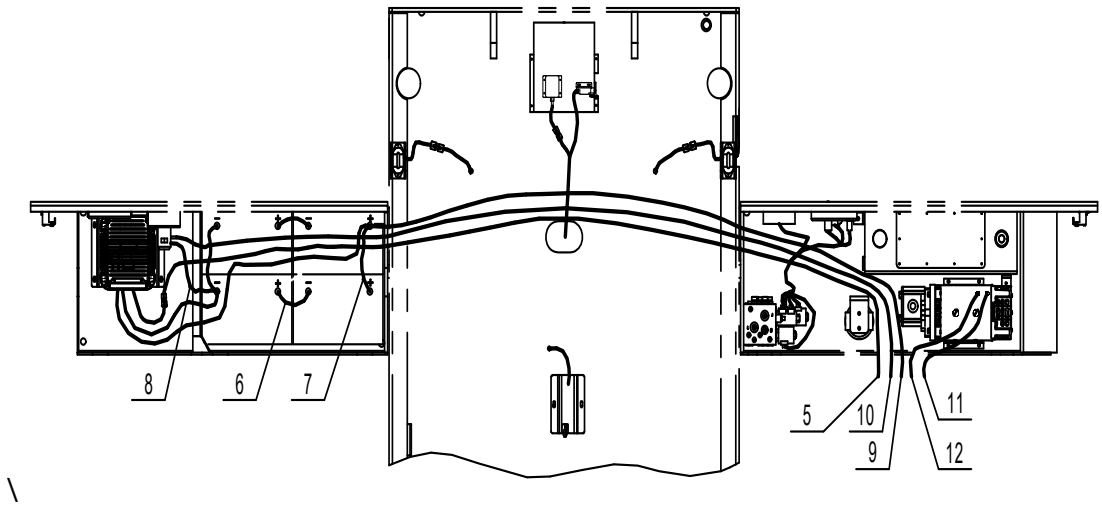

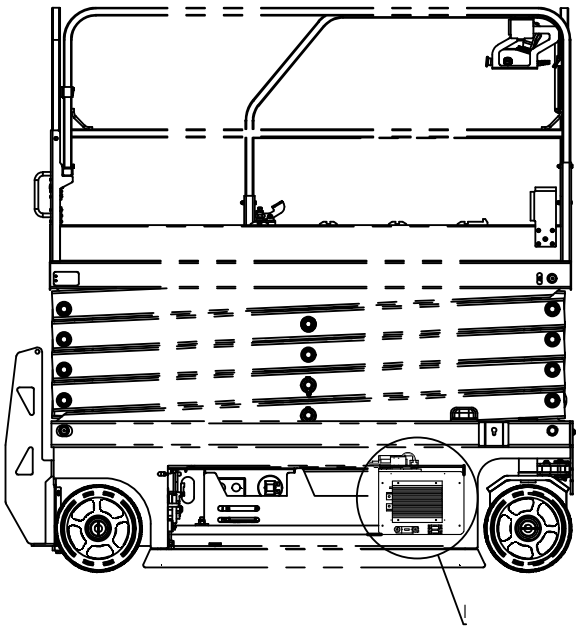

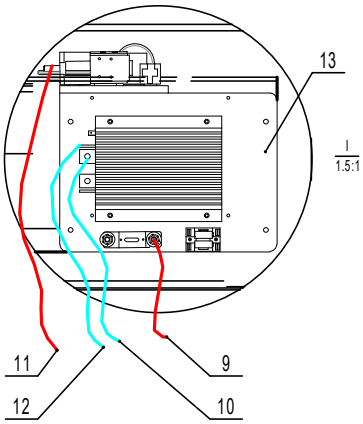

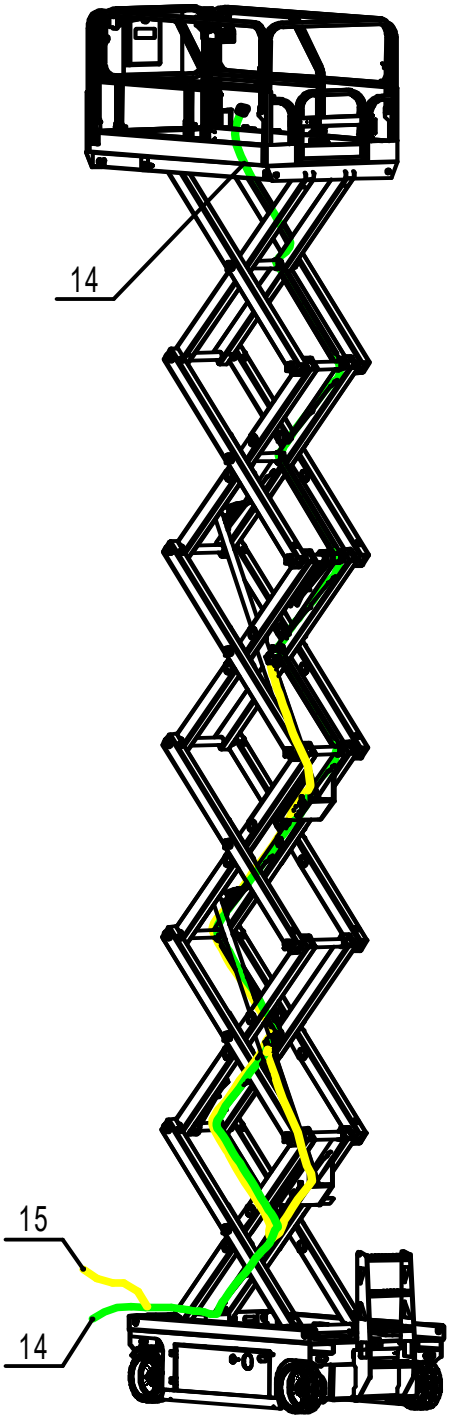
14
15
14

Table 13.1 Wiring harness

NO.	Art No.	Description	Qty.	Note
1	606533003000	Schematic Diagram	1	Diagram
2	606533003001	Wiring Diagram	1	Diagram
3	602033003004	Controller	1	Parameter Table
4	602033003005	Controller	1	Parameter Table
5	606533010000	Wiring harness	1	Assembly
6	602533010004	Cable	2	Assembly
7	602533010005	Cable	2	Assembly
8	606533010003	Cable	1	Assembly
9	606533010010	Cable	1	Assembly
10	606533010004	Cable	1	Assembly
11	606533010005	Cable	1	Assembly
12	606533010006	Cable	1	Assembly
13	606533010007	Controller	1	Assembly
14	606533010001	Wiring harness	1	Assembly
15	606533010002	Wiring harness	1	Assembly

Figure 13.2 Wiring harness（SC16E）

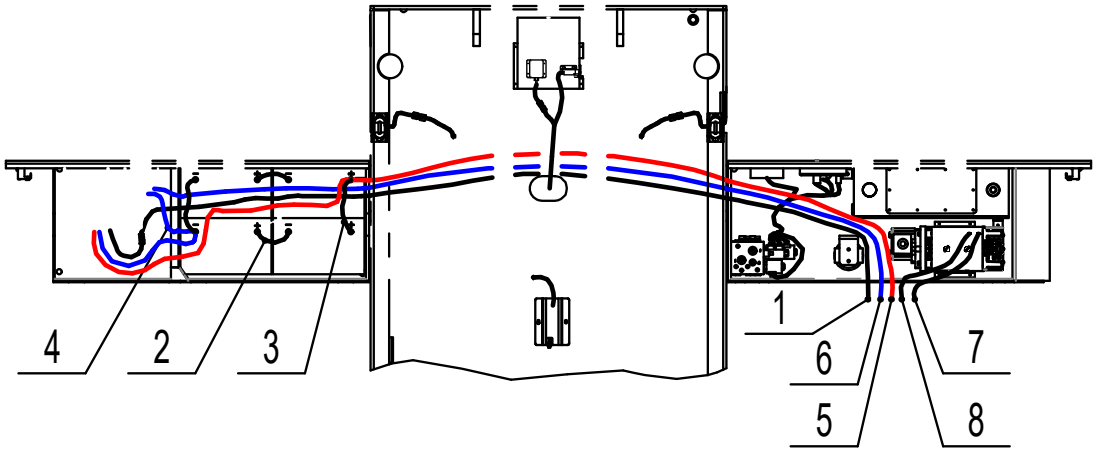

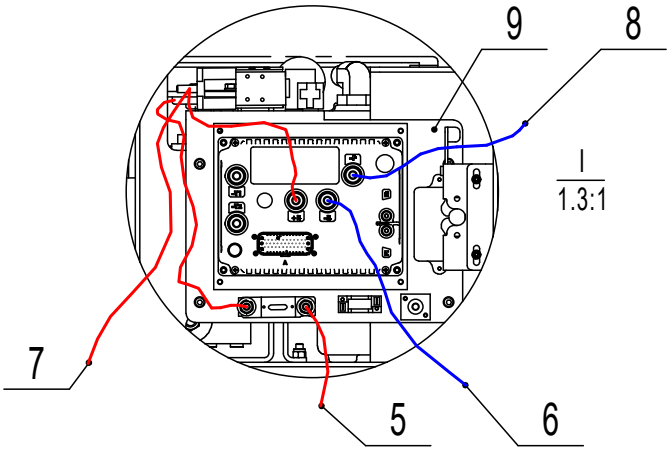

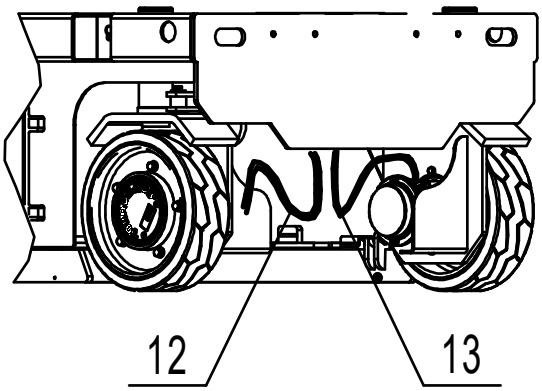

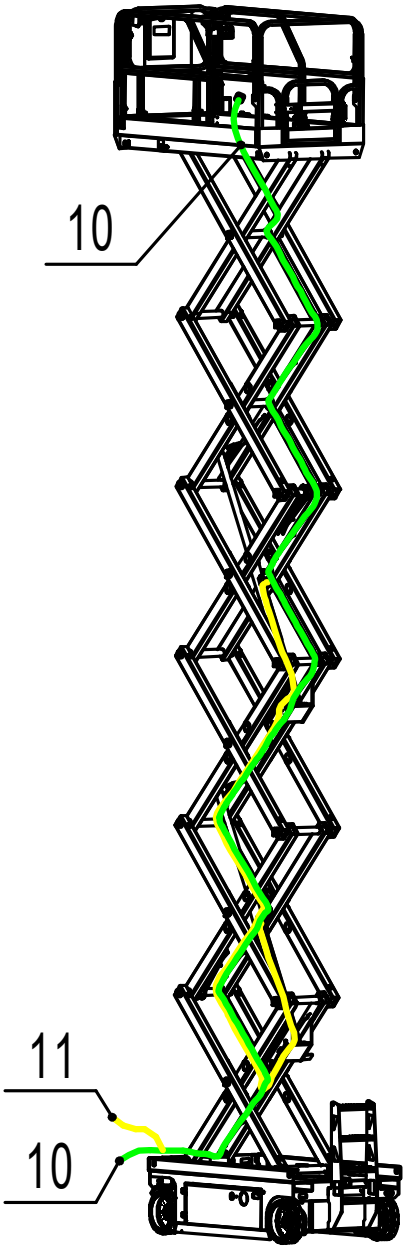
10
11
10

Table 13.2 Wiring harness

NO.	Art No.	Description	Qty.	Note
1	607033010000	Wiring harness	1	
2	602533010004	Cable	1	
3	602533010005	Cable	1	
4	606533010003	Cable	1	
5	606533010010	Cable	1	
6	607033010001	Cable	2	
7	607033010002	Cable	1	
8	607033010003	Cable	1	
9	607033010004	Assembly Controller	1	
10	606533010001	Wiring harness	1	
11	606533010002	Wiring harness	1	
12	607033010008	Wiring harness	1	
13	606533010007	Wiring harness	1	

Figure 13.3 Weighing device (match)

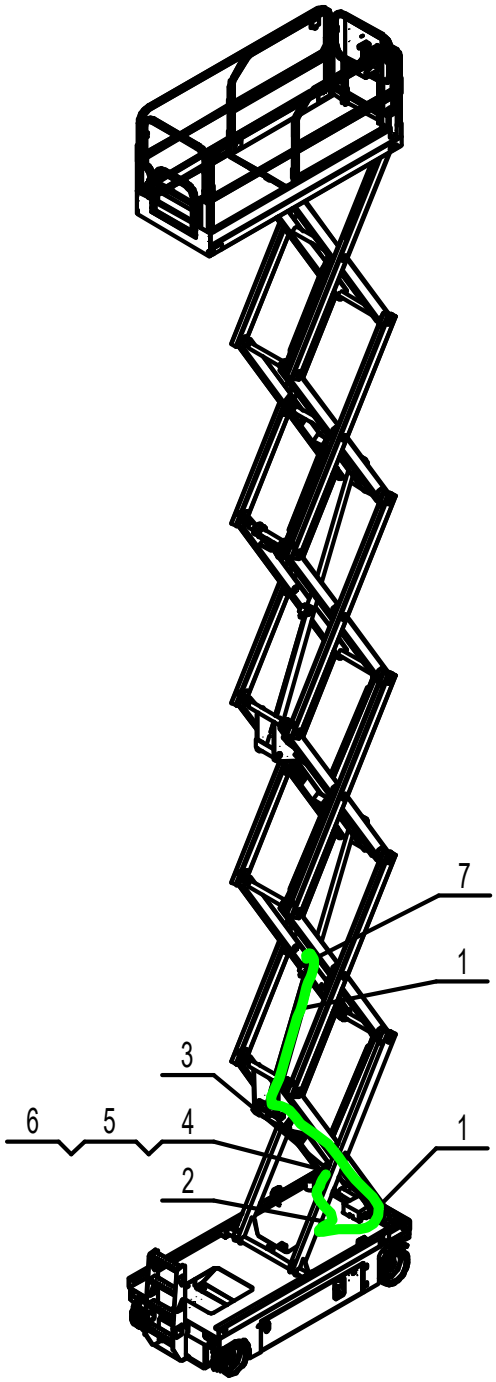

Figure 13.3 Weighing device (match)

NO.	Art No.	Description	Qty.	Note
1	606566010002	Wiring harness	1	
2	606566010001	Wiring harness	1	
3	602066010000	Sensor	1	
4	910200200022	Screw	1	
5	910400100004	Washer	1	
6	910400500004	Washer	2	
7	921800100015	Sensor	1	

Figure 14.1 Cylinder(SC16H/SC16E）

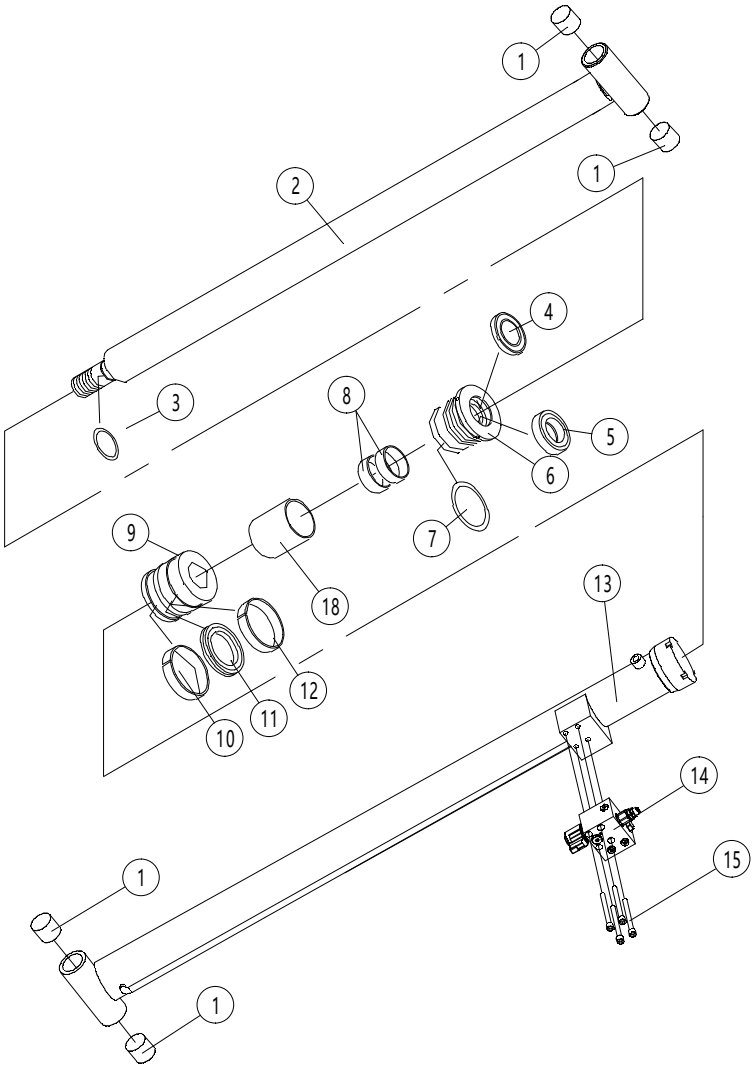

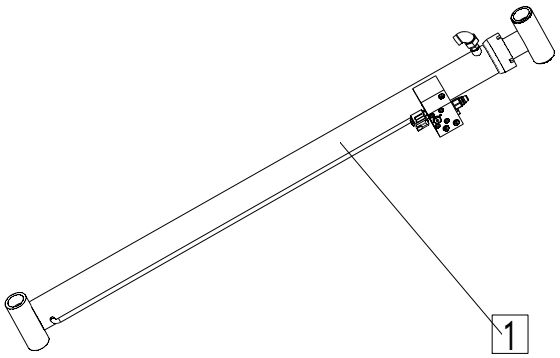

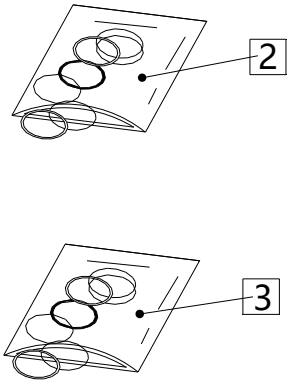

Table14.1 Cylinder (SC16H/SC16E)

NO.	Art No.	Description	Qty.	Note
1	940500300001	Bearing	4	
2	Does not provide a separate sale	Piston rod	1	
3	Does not provide a separate sale	O ring	1	
4	Does not provide a separate sale	Dust ring	1	
5	Does not provide a separate sale	Shaft seal	1	
6	Does not provide a separate sale	Guide sleeve	1	
7	Does not provide a separate sale	O ring	1	
8	Does not provide a separate sale	Supporting ring	2	
9	Does not provide a separate sale	Piston	1	
10	Does not provide a separate sale	Supporting ring	1	
11	Does not provide a separate sale	Hole seal	1	
12	Does not provide a separate sale	Ring	1	
13	Does not provide a separate sale	Cylinder	1	
14	950600100026	Valve	1	
15	910200200066	Screw	4	
1	606523501009	Cylinder	1	
2	606598510002	Sealing bag	1	No：3,10,11,12
3	606598510003	Sealing bag	1	No：4,5,7,8

Figure 15.1 Cylinder (SC16H/SC16E)

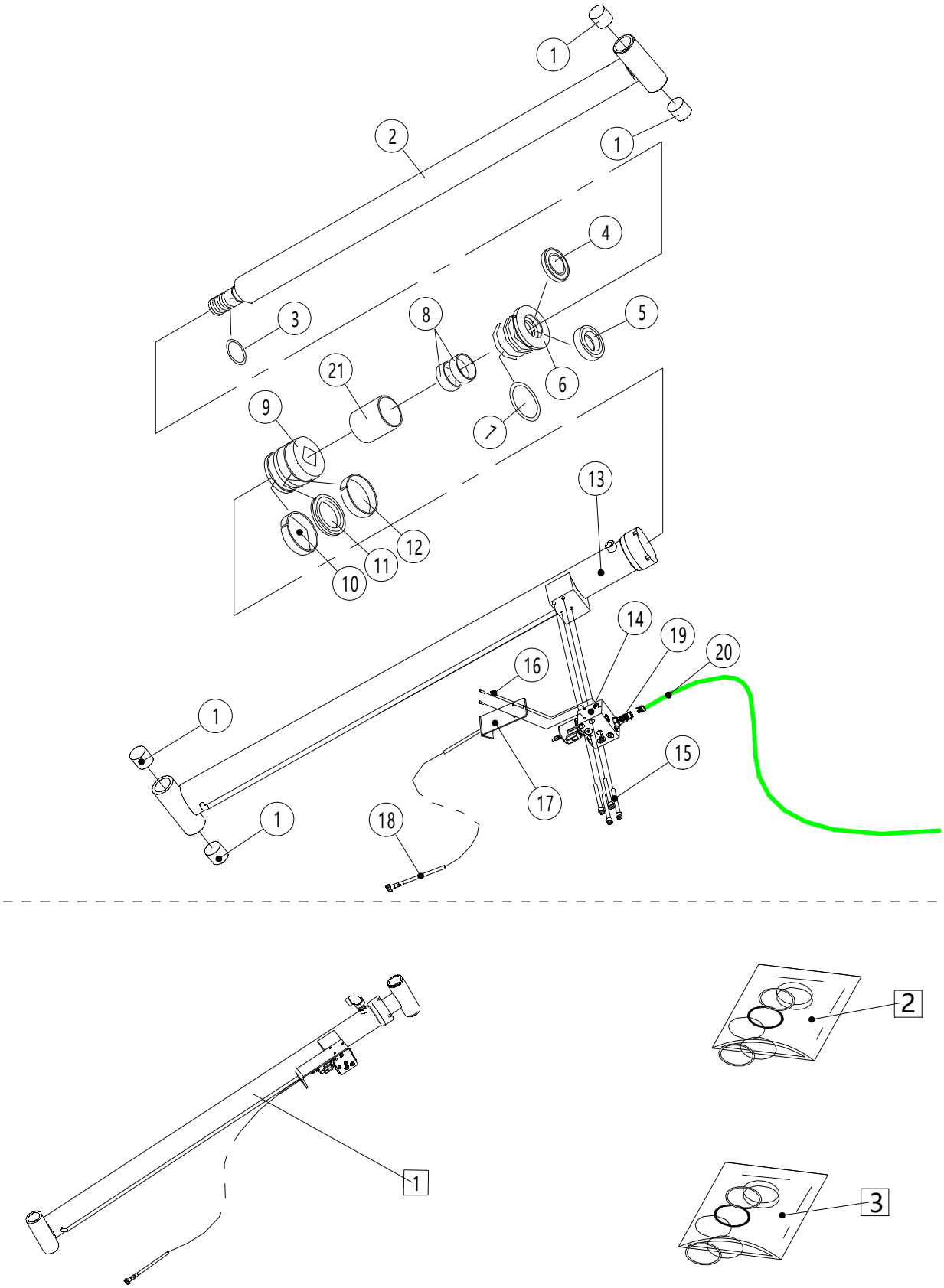

Table 15.1 Cylinder

NO.	Art No.	Description	Qty.	Note
1	940500300001	Bearing	4	
2	Does not provide a separate sale	Piston rod	1	
3	Does not provide a separate sale	O-ring	1	
4	Does not provide a separate sale	Dust ring	1	
5	Does not provide a separate sale	Shaft seal	1	
6	Does not provide a separate sale	Guide sleeve	1	
7	Does not provide a separate sale	O-ring	1	
8	Does not provide a separate sale	Supporting ring	2	
9	Does not provide a separate sale	Piston	1	
10	Does not provide a separate sale	Supporting ring	1	
11	Does not provide a separate sale	Hole seal	1	
12	Does not provide a separate sale	Ring	1	
13	Does not provide a separate sale	Cylinder	1	
14	950600100025	Valve	1	
15	910200200066	Screw	4	
16	910200200035	Screw	3	
17	602023520002	Mounting plate	1	
18	606523501011	Drop in handle	1	
19	921800100003	Sensor	1	
20	602066010002	Wiring harness	1	
1	606523501008	Cylinder assembly	1	
2	606598510004	Sealing bag	1	No：3,10,11,12
3	606598510005	Sealing bag	1	No：4,5,7,8

Figure 16.1 Hydraulic circuit diagram（SC16H）

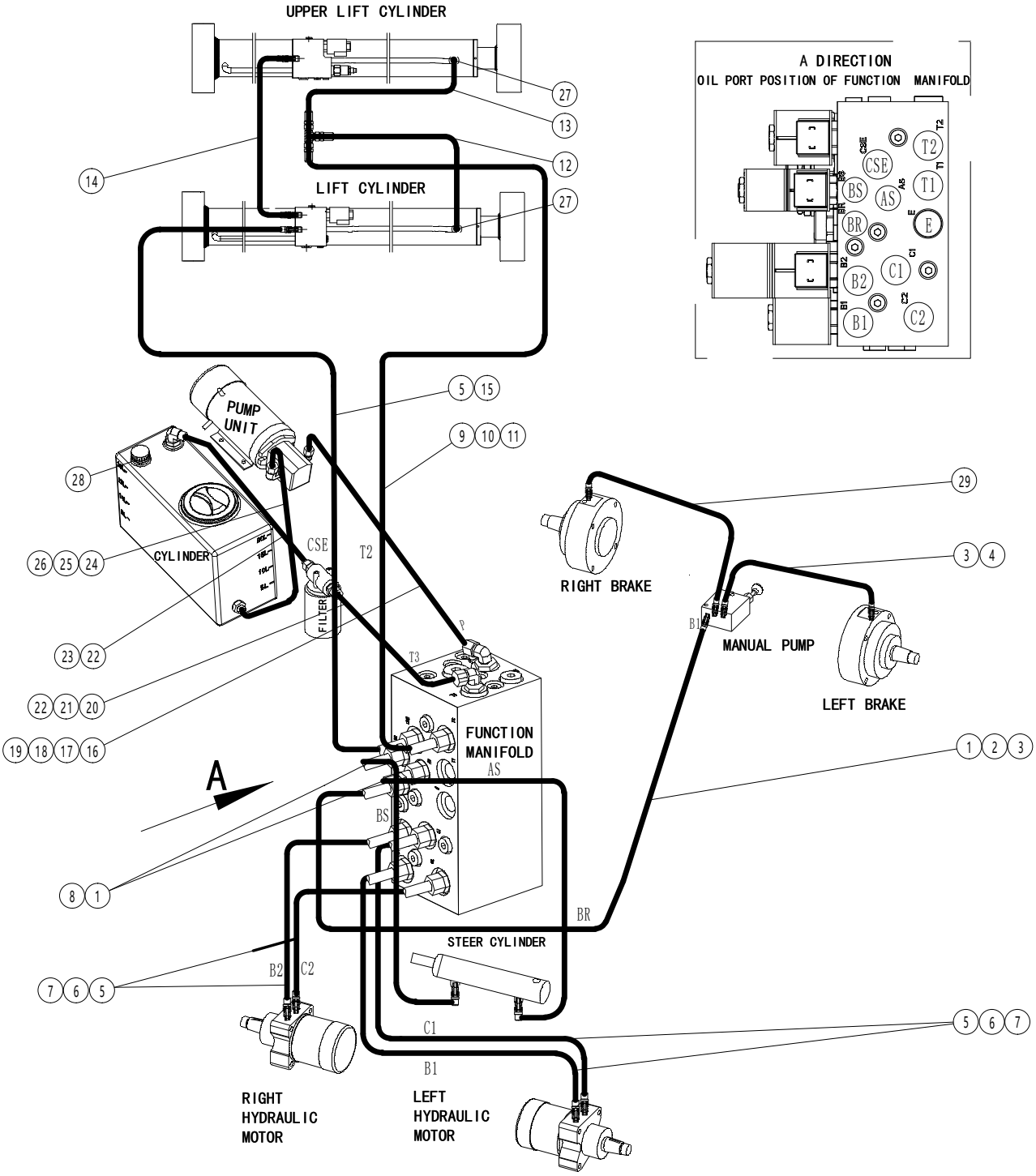

Table 16.1 Hydraulic circuit(SC16H)

NO.	Art No.	Description	Qty.	Note
1	950400300003	Joint	5	
2	606523510001	Hydraulic hose	1	
3	950400300013	Joint	5	
4	606523510002	Hydraulic hose	1	
5	950400300007	Joint	8	
6	602023510011	Hydraulic hose	4	
7	950400300014	Joint	4	
8	602023510009	Hydraulic hose	2	
9	950400300004	Joint	1	
10	606523510005	Hydraulic hose	1	
11	950400700001	Joint	1	
12	606523510003	Hydraulic hose	1	
13	606523510004	Hydraulic hose	1	
14	606523510007	Hydraulic hose	1	
15	606523510006	Hydraulic hose	1	
16	950400300008	Joint	1	
17	602023510013	Hydraulic hose	1	
18	950401200004	Joint	1	
19	950400300009	Joint	1	
20	950400300012	Joint	1	
21	602023510014	Hydraulic hose	1	
22	950400300011	Joint	2	
23	602023510017	Hydraulic hose	1	
24	950401200005	Joint	2	
25	602023510015	Hydraulic hose	1	
26	950400300010	Joint	1	
27	950401300001	Joint	2	
28	950401200001	Joint	1	
29	606523510008	Hydraulic hose	1	

Figure 16.2 Hydraulic circuit diagram（SC16E）

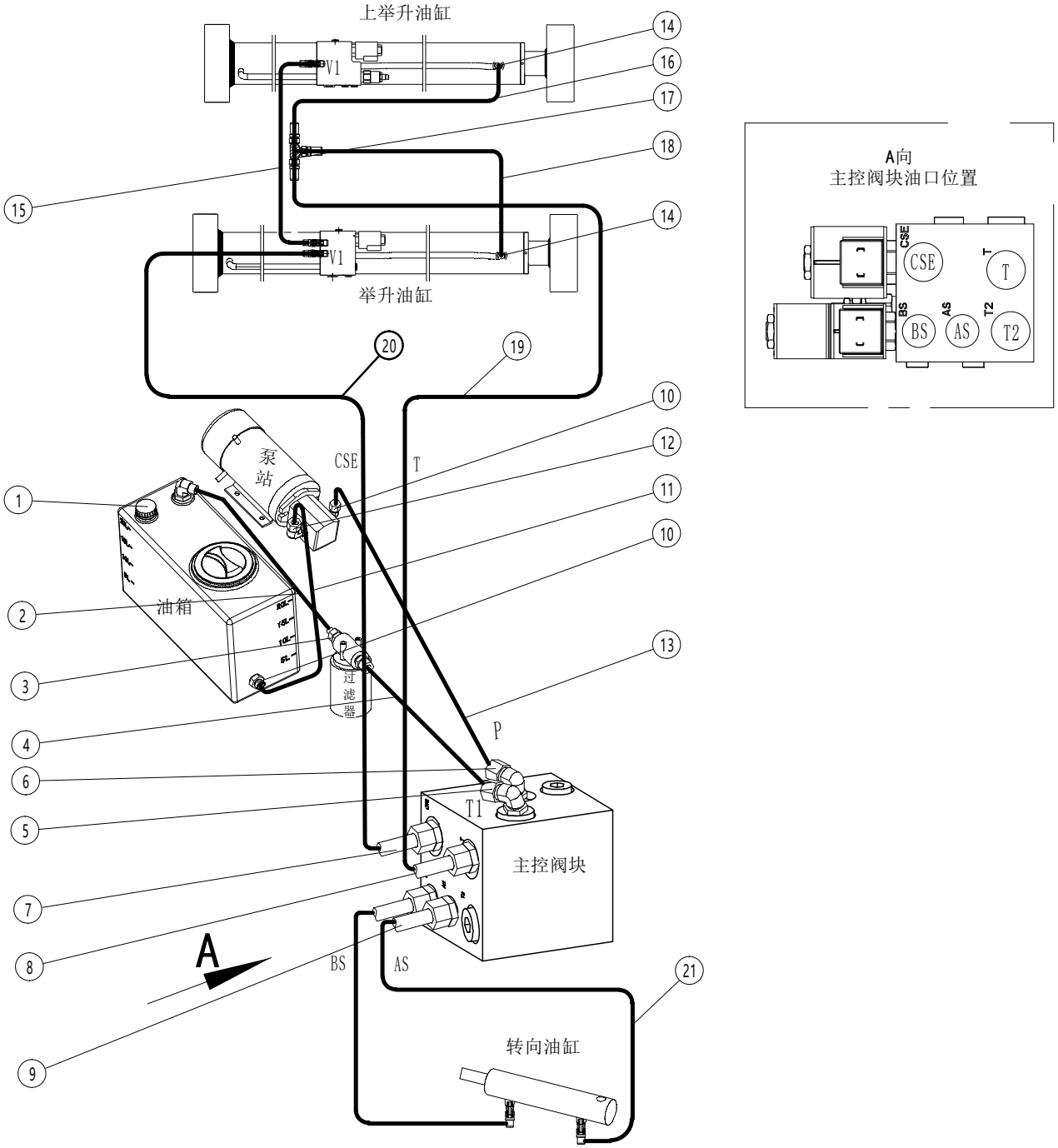

Table 16.2 Hydraulic circuit(SC16E)

NO.	Art No.	Description	Qty.	Note
1	950401200001	Joint	1	
2	602023510017	Hydraulic hose	1	
3	950400300011	Joint	2	
4	602023510014	Hydraulic hose	1	
5	950400300012	Joint	1	
6	950400300009	Joint	1	
7	950400300007	Joint	8	
8	950400300004	Joint	1	
9	950400300003	Joint	4	
10	950401200005	Joint	2	
11	602023510015	Hydraulic hose	1	
12	950400300010	Joint	1	
13	602023510013	Hydraulic hose	1	
14	950401300001	Joint	2	
15	606523510007	Hydraulic hose	1	
16	606523510004	Hydraulic hose	1	
17	950400700001	Joint	1	
18	606523510003	Hydraulic hose	1	
19	606523510005	Hydraulic hose	1	
20	606523510006	Hydraulic hose	1	
21	602023510009	Hydraulic hose	2	

Figure 17.1 Steering Cylinder

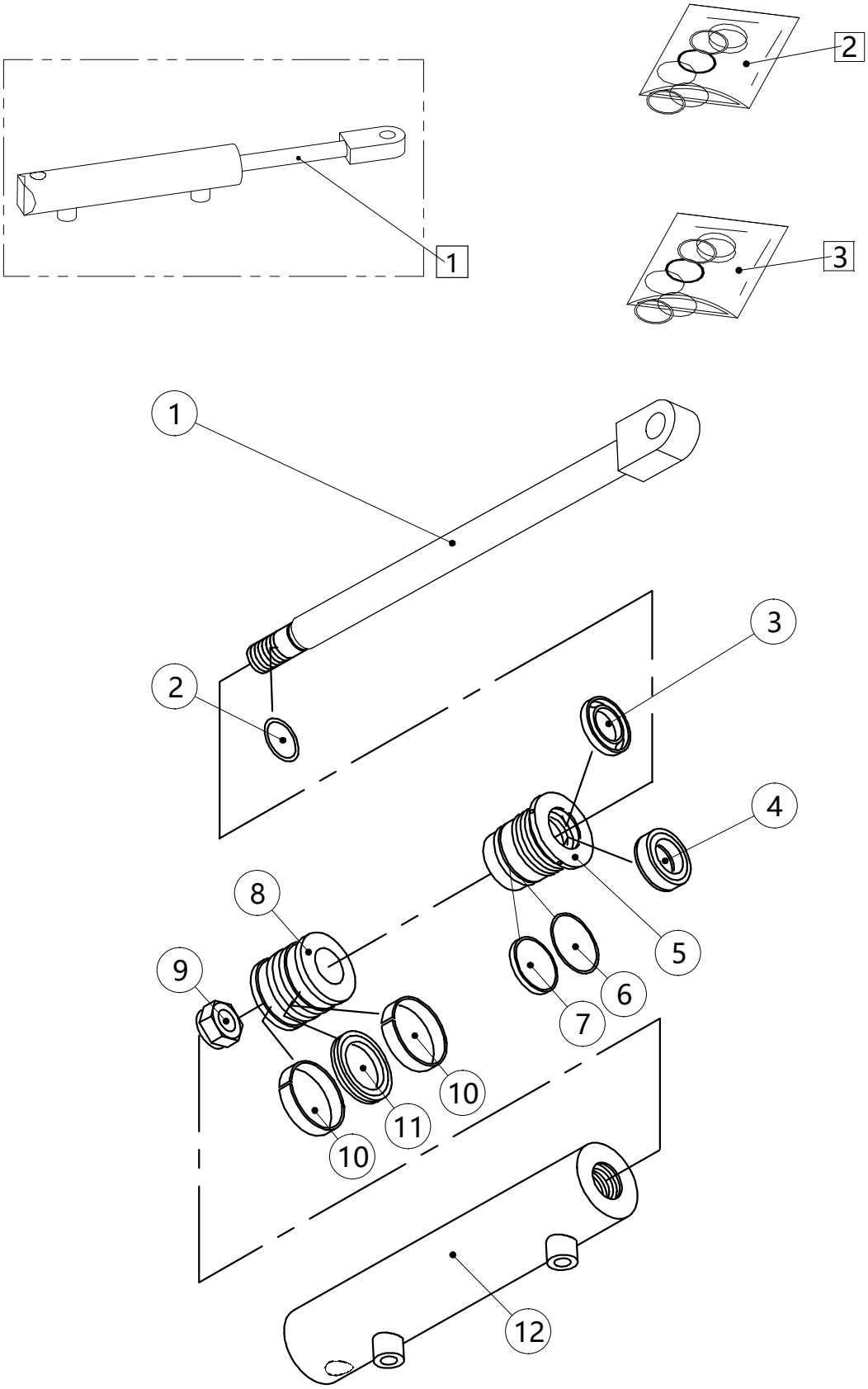

Table 17.1 Steering Cylinder

NO.	Art No.	Description	Qty.	Note
1	Does not provide a separate sale	Piston rod	1	
2	Does not provide a separate sale	O-sealing ring	1	
3	Does not provide a separate sale	Dust ring	1	
4	Does not provide a separate sale	Sealing ring	1	
5	Does not provide a separate sale	Cylinder screw cap	1	
6	Does not provide a separate sale	O-sealing ring	1	
7	Does not provide a separate sale	Collar	1	
8	Does not provide a separate sale	Piston	1	
9	Does not provide a separate sale	Nut	1	
10	Does not provide a separate sale	Supporting ring	2	
11	Does not provide a separate sale	Sealing ring	1	
12	Does not provide a separate sale	Cylinder body	1	
1	606523501010	Cylinder assembly	1	
2	606598510006	Sealing bag	1	No：2,10,11
3	606598510007	Sealing bag	1	No：3,4,6,7

Figure 18.1 Hydraulic oil tank

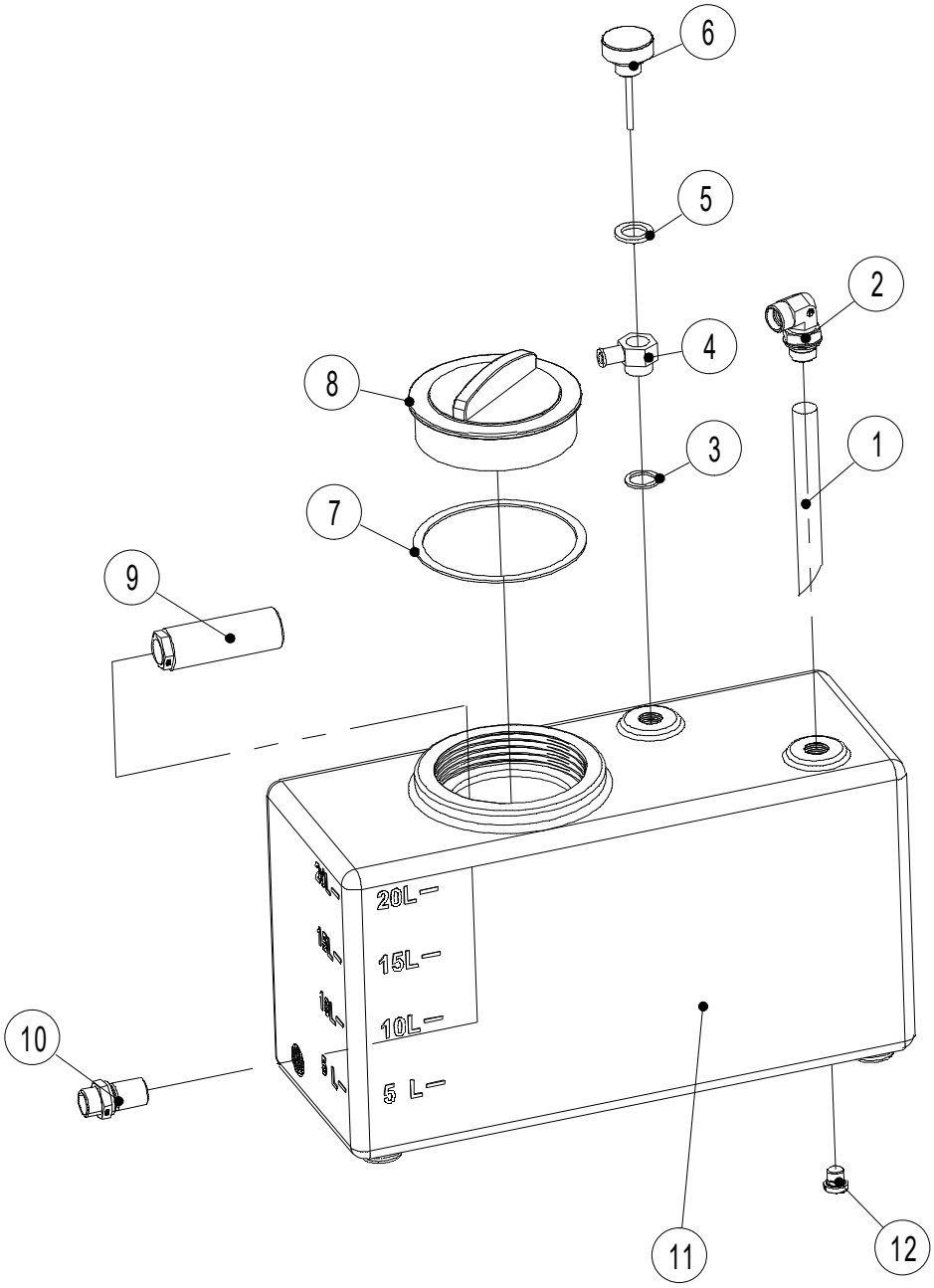

Table 18.1 Hydraulic oil tank

NO.	Art No.	Description	Qty.	Note
1	602098520051	Oil return pipe	1	
2	602098520022	Joint	1	
3	602098520052	Washer	1	
4	602098520053	Joint	1	
5	602098520054	Washer	1	
6	602098520020	Cover	1	
7	602098520055	Gasket	1	
8	602098520021	Oil tank cover	1	
9	602098520023	Oil filter	1	
10	602098520026	Joint	1	
11	602098520025	Oil tank	1	
12	602098520024	Plug	1	

Figure 19.1 Electrical installation assembly (SC16H)

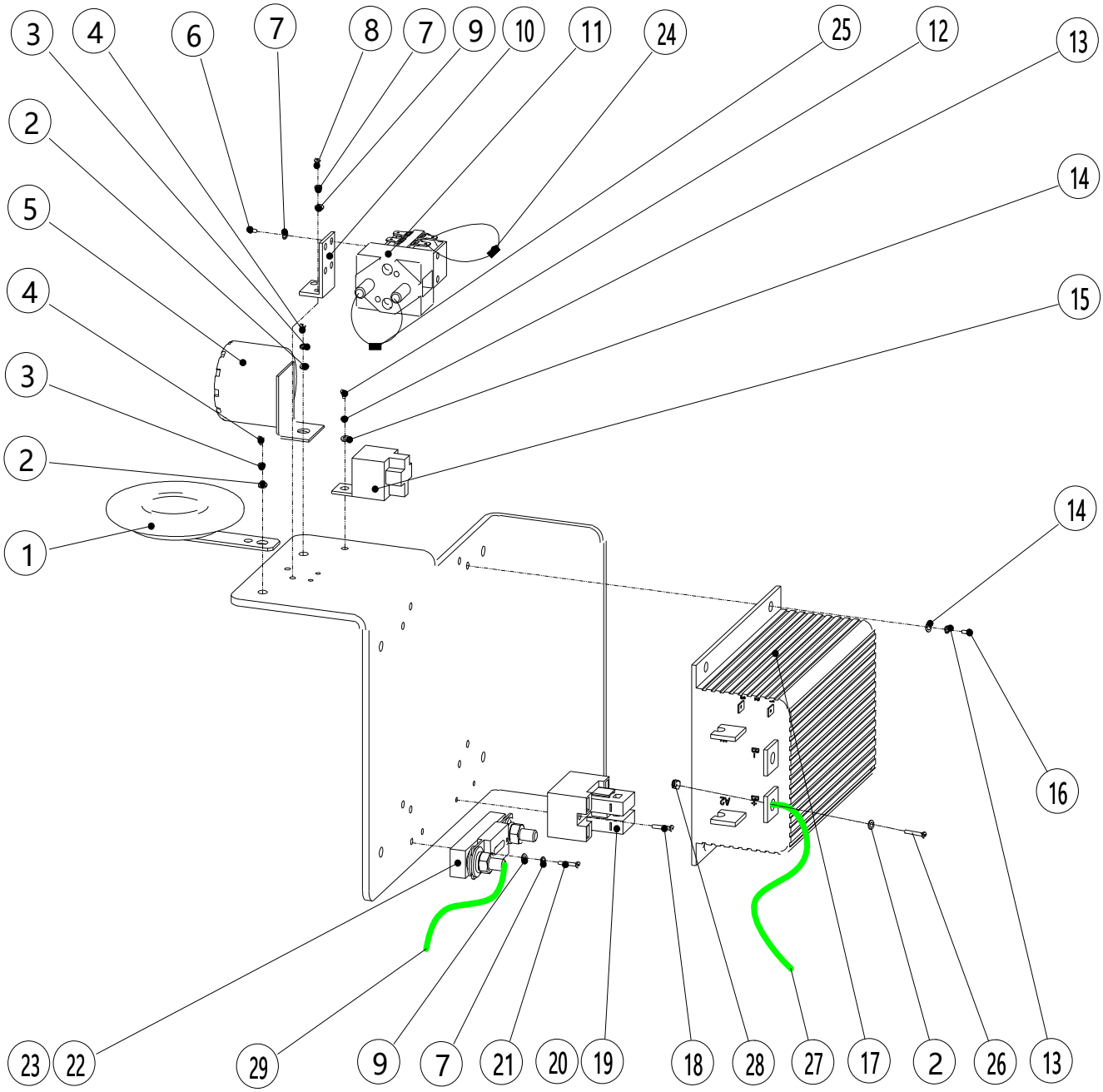

Table 19.1 Electrical installation assembly(SC16H)

NO.	Art No.	Description	Qty.	Note
1	920500100001	Horn	1	
2	910400100006	Washer	2	
3	910400500006	Washer	2	
4	910200200053	Screw	2	
5	920500100002	Buzzer	1	
6	910200500036	Screw	4	
7	910400500004	Washer	8	
8	910200500037	Screw	2	
9	910400100004	Washer	4	
10	921300400005	Fixed part	1	
11	920700100009	Contactor	1	
12	910200200032	Screw	1	
13	910400500005	Washer	5	
14	910400100005	Washer	5	
15	920800100001	Relay	1	
16	910200200033	Screw	4	
17	921400100044	Controller	1	
18	910200500028	Screw	2	
19	920100400006	Fuse holder	1	
20	920100200002	Fuse	1	
21	910200500040	Screw	2	
22	920100400002	Fuse holder	1	
23	920100100011	Fuse	1	
24	930100100001	diode	1	
25	930300200004	resistance	3	
26	910200200055	Screw	1	
27	606533010009	Cable	3	
28	910300500004	Nut	1	
29	606533010008	Cable	1	

Figure 19.2 Electrical installation assembly (SC16E)

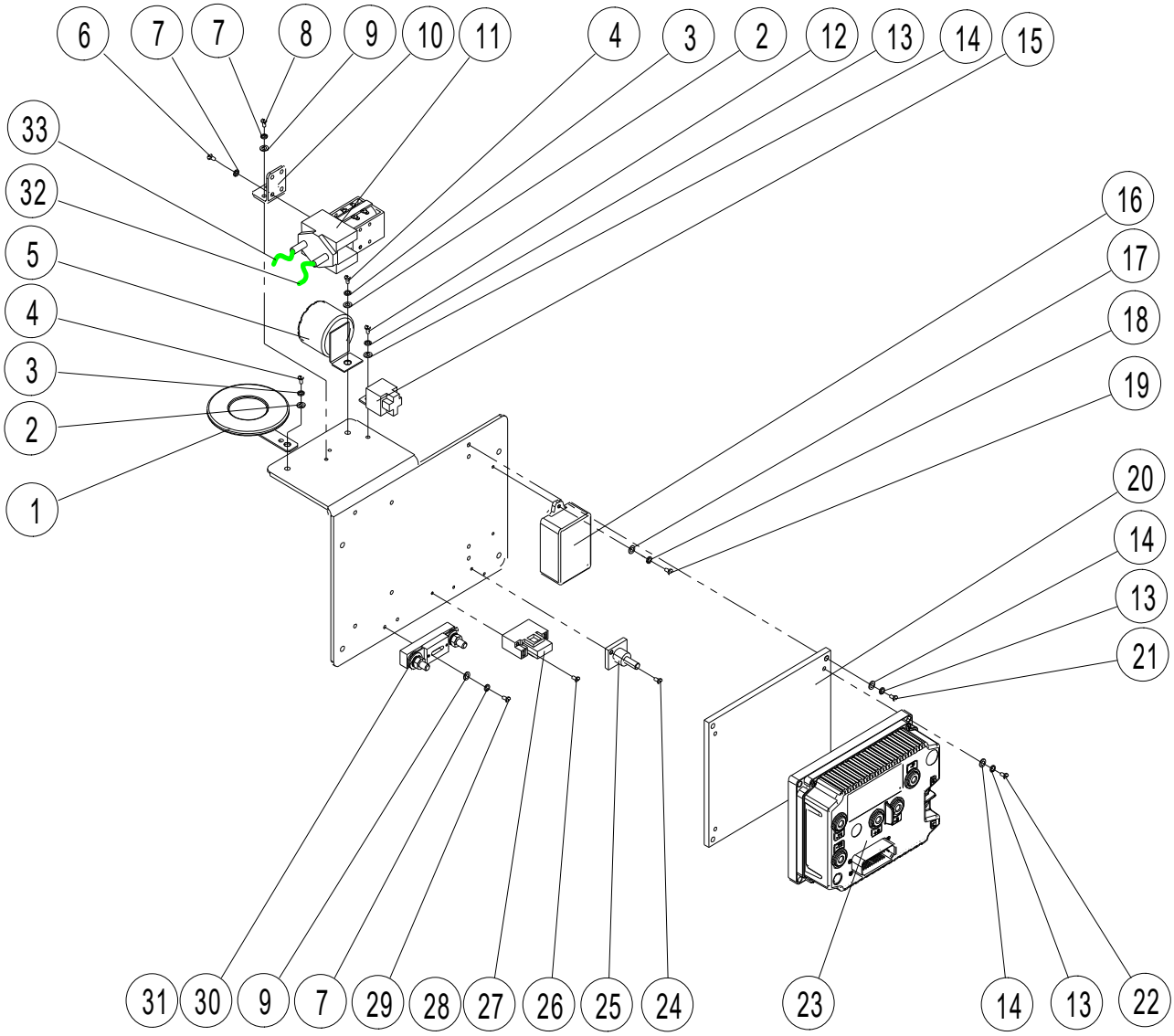

Table 19.2 Electrical installation assembly(SC16E)

NO.	Art No.	Description	Qty.	Note
1	920500100001	Horn	1	
2	910400100006	Washer	2	
3	910400500006	Washer	2	
4	910200200053	Screw	2	
5	920500100002	Buzzer	1	
6	910200500036	Screw	4	
7	910400500004	Washer	8	
8	910200500037	Screw	2	
9	910400100004	Washer	4	
10	921300400005	Fixed part	1	
11	920700100002	Contactor	1	
12	910200200032	Screw	1	
13	910400500005	Washer	9	
14	910400100005	Washer	9	
15	920800100001	Relay	1	
16	604533010008	Electromagnetic brake module	1	
17	910400100003	Washer	2	
18	910400500003	Washer	2	
19	910200500021	Screw	2	
20	607033020000	Aluminum plate	1	
21	910200200035	Screw	4	
22	910200200038	Screw	4	
23	921400100044	Controller	1	
24	910200500024	Screw	2	
25	920100400001	Fuse holder	1	
26	910200500017	Screw	2	
27	920100400006	Fuse holder	1	
28	920100200002	Fuse	1	
29	910200500040	Screw	2	
30	920100400002	Fuse holder	1	
31	920100100011	Fuse	1	
32	607033010003	Cable	1	
33	607033010002	Cable	1	