Parts & Components Manual

Scissor lifts

SC10H/SC12H/SC14H/SC10E/SC12E/SC14E/SC08HN/SC10HN/SC08EN/SC10EN

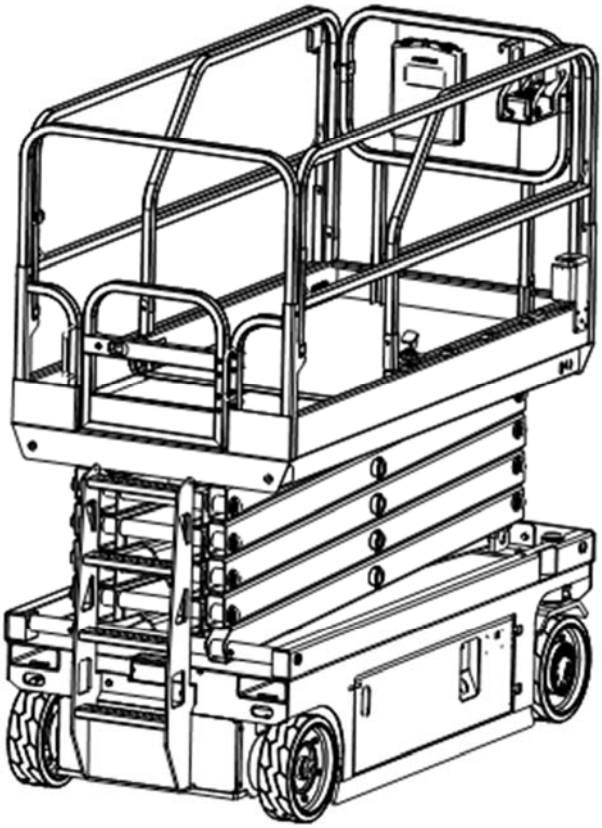

Version 05/2022

SC-BPT-012-EN

Contents

Figure 1.1 Parts and components of chassis (SC10H/SC12H/SC14H/SC10E/SC12E/SC14E) 1

Figure 1.2 Parts and components of chassis (SC08HN/SC10HN/SC08EN/SC10EN)..... 4

Figure 2.1 Pump station box assembly (SC10H/SC12H/SC14H/SC08HN/SC10HN)..... 7

Figure 2.2 Pump station box assembly(SC10E/SC12E/SC14E/SC08EN/SC10EN)..... 10

Figure 3.1 Rear wheel (SC10H/SC12H/SC14H/SC08HN/SC10HN) 13

Figure 3.2 Rear wheel (SC10E/SC12E/SC14E/SC08EN/SC10EN) 14

Figure 4.1 Pothole protection mechanism(SC10H/SC12H/SC14H/SC10E/SC12E/SC14E)..... 16

Figure 4.2 Pothole protection mechanism (SC08HN/SC10HN/SC08EN/SC10EN) 19

Figure 5 Battery box assembly 22

Figure 6.1 Steering mechanism(SC10H/SC12H/SC14H) 25

Figure 6.2 Steering mechanism(SC10E/SC12E/SC14E)..... 27

Figure 6.3 Steering mechanism(SC08HN/SC10HN) 29

Figure 6.4 Steering mechanism(SC08EN/SC10EN)..... 31

Figure 7 Parts and components of scissors(SC10H/SC10E)..... 33

Figure 8 Parts and components of scissors(SC12H/SC12E)..... 36

Figure 9 Parts and components of scissors(SC14H/SC14E)..... 39

Figure 10 Parts and components of scissors(SC08HN/SC08EN)..... 42

Figure 11 Parts and components of scissors(SC10HN/SC10EN)..... 45

Figure 12.1 Extended platform assembly(SC10H/SC12H/SC14H/SC10E/SC12E/SC14E)..... 48

Figure 12.2 Extended platform assembly (SC08HN/SC10HN/SC08EN/SC10EN) 50

Figure 13.1 Main platform assembly(SC10H/SC12H/SC14H/SC10E/SC12E/SC14E) 52

Figure 13.2 Main platform assembly (SC08HN/SC10HN/SC08EN/SC10EN) 54

Figure 14.1 Main control valve block(SC10H/SC12H/SC14H/SC08HN/SC10HN) 57

Figure 14.2 Main control valve block(SC10E/SC12E/SC14E/SC08EN/SC10EN) 59

Figure 15 Platform controller components 61

Figure 16.1 Pedal lock(SC10H/SC12H/SC14H/SC10E/SC12E/SC14E) 63

Figure 16.2 Pedal lock (SC08HN/SC10HN/SC08EN/SC10EN)..... 64

Figure 17.1 Wiring harness(SC10H/SC12H) 65

Figure 17.2 Wiring harness(SC14H) 68
Figure 17.3 Wiring harness(SC08HN/SC10HN) 71
Figure 18 Cylinder(SC12H/SC14H/SC12E/SC14E) 74
Figure 19 Cylinder 76
Figure 20.1 Hydraulic circuit diagram(SC10H) 78
Figure 20.2 Hydraulic circuit diagram(SC12H/SC14H) 80
Figure 20.3 Hydraulic circuit diagram(SC10E) 82
Figure 20.4 Hydraulic circuit diagram(SC12E/SC14E) 84
Figure 20.5 Hydraulic circuit diagram(SC08HN/SC10HN) 86
Figure 20.6 Hydraulic circuit diagram(SC08EN/SC10EN) 88
Figure 21 Steering Cylinder 90
Figure 22 Hydraulic oil tank 92
Figure 23 Electrical installation assembly (SC10E/SC12E/SC14E/SC08EN/SC10EN) 94
Figure 24.1 Valve group（SC12H/SC14H/SC12E/SC14E） 96
Figure 24.2 Valve group 98
Figure 25 Parts of collision protection mechanism(optional) 100

Figure 1.1 Parts and components of chassis

(SC10H/SC12H/SC14H/SC10E/SC12E/SC14E)

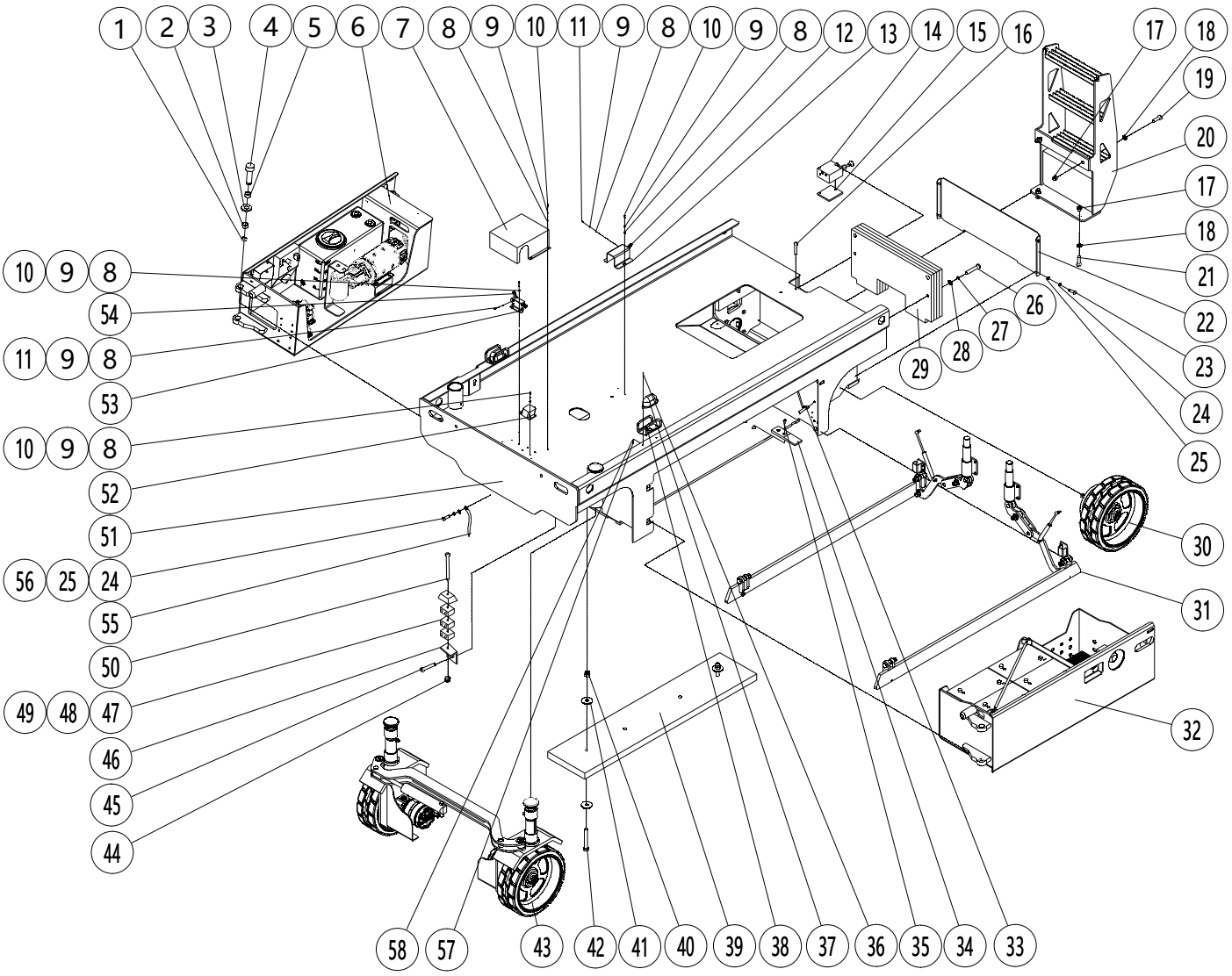

Table 1.1 Parts and components of chassis

NO.	Art No.	Description	Qty.	Note
1	910401300014	Collar	4	
2	940500200023	Composite sleeve	4	
3	940600600001	Washer	4	
4	602021520036	Shaft	4	
5	940500100027	Composite sleeve	4	
6	600510001000	Pump station box	1	Figure2.1
	603010001000			Figure 2.2
7	602021520069	Fixed box	1	
8	910400100004	Washer	20	
9	910400500004	Washer	20	
10	910200200023	Screw	12	
11	910200500038	Screw	8	
12	920200600003	Limit switch	1	
13	602021520043	Limit plate	1	
14	951000500001	Manual pump	1	SC10H/SC12H/SC14H
15	602021520040	Cover plate	1	SC10H/SC12H/SC14H
16	941100200003	Bolt	2	SC10H/SC12H/SC14H
17	910300500007	Nut	4	
18	910400100009	Washer	4	
19	910100300064	Bolt	2	
20	601521510001	Pedal ladder	1	SC10H/SC10E
	602021510001		1	SC12H/SC12E SC14H/SC14E
21	910100300065	Bolt	2	
22	602021520041	Cover plate	1	
23	910100300022	Bolt	4	
24	910400500006	Washer	5	
25	910400100006	Washer	5	
26	910100100063	Bolt	2	SC12H/SC12E
	910100100058	Bolt		SC10H/SC10E SC14H/SC14E
27	910400100008	Washer	2	
28	910400500008	Washer	2	

29	602021520039	Counterweight	8	SC12H/SC12E
			4	SC10H/SC10E SC14H/SC14E
30	602098510001	Rear wheel	2	Figure 3.1
	604521510000			Figure 3.2
31	602019501000	Pothole Protection Assembly	1	Figure 4
32	600521501001	Battery box assembly	1	Figure 5
33	602021520050	Shaft	2	
34	602021520037	Block	2	
35	910200400025	Screw	4	
36	910200600009	Screw	4	
37	602035510001	Warning light	2	
38	602021510003	Lampshade	2	
39	602021520038	Clump weight	1	SC10H/SC10E SC12H/SC12E
40	910300500008	Nut	2	
41	910400400003	Washer	4	
42	910100100080	Bolt	2	
43	602016001000	Steering mechanism	1	Figure 6.1
	604516001000			Figure 6.2
44	910300500004	Nut	1	
45	910200200058	Screw	4	
46	602023520001	Support	1	
47	951000200003	Pipe clamp	2	
48	951000200002	Pipe clamp	1	
49	951000200001	Cover plate	1	
50	941100400004	Screw	1	
51	602021510000	Chassis	1	
52	602033510000	Sensor	1	SC10H/SC10E SC12H/SC12E
	602533510000	Sensor		SC14H/SC14E
53	602021520042	Limit plate	1	
54	920200600004	Limit switch	1	
55	602021520074	Anti-static belt	1	
56	910200200053	Screw	1	
57	910300500001	Nut	4	
58	910400100003	Washer	4	

Figure 1.2 Parts and components of chassis

(SC08HN/SC10HN/SC08EN/SC10EN)

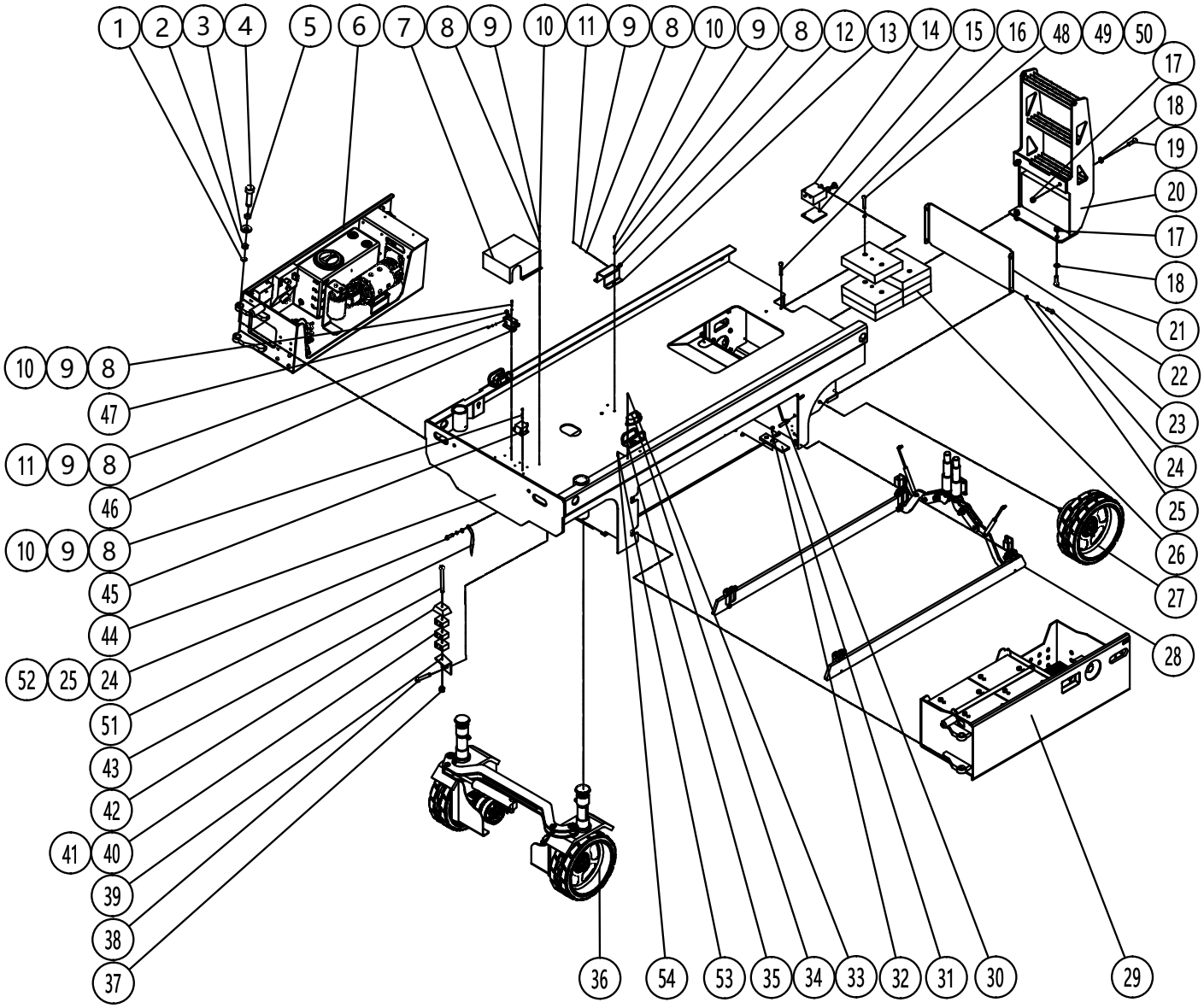

Table 1.2 Parts and components of chassis

NO.	Art No.	Description	Qty.	Note
1	910401300014	Collar	4	
2	940500200023	Composite sleeve	4	
3	940600600001	Washer	4	
4	602021520036	Shaft	4	
5	940500100027	Composite sleeve	4	
6	600510001000	Pump station box	1	Figure2.1
	603010001000			Figure2.2
7	602021520069	Fixed box	1	
8	910400100004	Washer	20	
9	910400500004	Washer	20	
10	910200200023	Screw	12	
11	910200500038	Screw	8	
12	920200600003	Limit switch	1	
13	602021520043	Limit plate	1	
14	951000500001	Manual pump	1	SC08HN/SC10HN
15	602021520040	Cover plate	1	SC08HN/SC10HN
16	941100200003	Bolt	2	SC08HN/SC10HN
17	910300500007	Nut	4	
18	910400100009	Washer	4	
19	910100300064	Bolt	2	
20	600521510001	Pedal ladder	1	
21	910100300065	Bolt	2	
22	600521520041	Cover plate	1	
23	910100300022	Bolt	4	
24	910400500006	Washer	5	
25	910400100006	Washer	5	
26	600521520036	Counterweight	6	SC08HN/SC08EN
			4	SC10HN/SC10EN
27	602098510001	Rear wheel	2	SC08HN/SC10HN
	604521510000		2	SC08EN/SC10EN
28	600519501000	Pothole Protection Assembly	1	
29	600521501001	Battery box assembly	1	

30	602021520050	Shaft	2	
31	600521520055	Block	2	
32	910200400025	Screw	4	
33	910200600009	Screw	4	
34	602035510001	Warning light	2	
35	602021510003	Lampshade	2	
36	600516001000	Steering mechanism	1	Figure 6.3
	603016001000			Figure 6.4
37	910300500004	Nut	1	
38	910200200058	Screw	4	
39	602023520001	Support	1	
40	951000200003	Pipe clamp	2	
41	951000200002	Pipe clamp	1	
42	951000200001	Cover plate	1	
43	941100400004	Screw	1	
44	600521510000	Chassis	1	
45	602033510000	Sensor	1	SC08HN/SC08EN
	602533510000	Sensor		SC10HN/SC10EN
46	602021520042	Limit plate	1	
47	920200600004	Limit switch	1	
48	910100100060	Bolt	4	SC10HN/SC10EN
			2	SC08HN/SC08EN
	910100100065		2	SC08HN/SC08EN
49	910400500008	Washer	4	
50	910400200005	Washer	4	
51	602021520074	Anti-static belt	1	
52	910200200053	Screw	1	
53	910300500001	Nut	4	
54	910400100003	Washer	4	

Figure 2.1 Pump station box assembly

(SC10H/SC12H/SC14H/SC08HN/SC10HN)

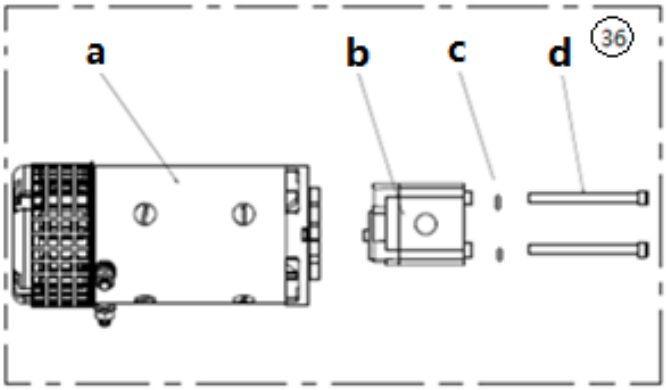

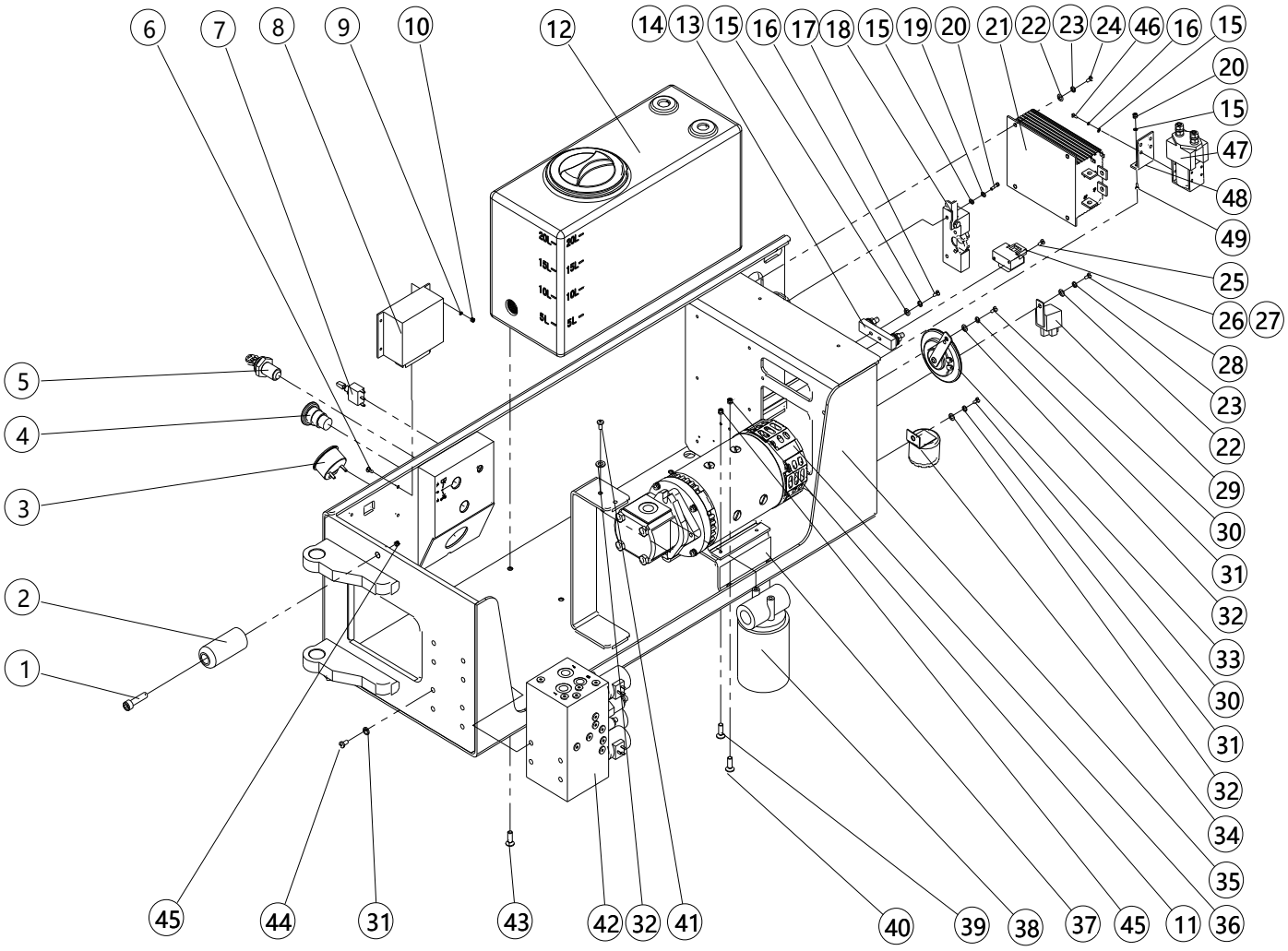

Table 2.1 Pump station box assembly

NO.	Art No.	Description	Qty.	Note
1	910200200079	Screw	1	
2	602010020008	Cushion pad	1	
3	921100100017	Meter	1	
4	920200100017	Emergency stop switch	1	
5	920200200005	Key switch	1	
6	910200600008	Screw	4	
7	920200700005	Button switch	1	
8	921400100022	Controller	1	
9	910400100003	Washer	4	
10	910300500001	Nut	4	
11	910300500004	Nut	4	
12	602019001001	Oil tank	1	
13	920100400002	Fuse bolder	1	
14	920100100011	Fuse	1	
15	910400100004	Washer	10	
16	910400500004	Washer	6	
17	910200500040	Screw	2	
18	940800300001	Lock body of engineering vehicle	1	
19	910400500004	Spring washer	2	
20	910100100005	Bolt	2	
21	921400100044	Controller	1	
22	910400100005	Washer	5	
23	910400500005	Washer	5	
24	910200200035	Screw	4	
25	910200500017	Screw	2	
26	920100400006	Fuse bolder	1	
27	920100200002	Fuse	1	
28	910200200032	Screw	1	
29	920800100001	Relay	1	
30	910200200053	Screw	2	
31	910400500006	Washer	6	
32	910400100006	Washer	4	

33	920500100001	Horn	1	
34	920500100002	Horn buzzer	1	
35	600510010000	Pump station box	1	
36	950900100074	Hydraulic power unit	1	a,b,c,d SC10H/SC12H/SC14H
	950900100080		1	a,b,c,d SC08HN/SC10HN
37	602010020009	Support	1	
38	951000300001	Return oil filter	1	
39	910100300022	Screw	4	
40	910200400026	Screw	4	
41	910100300020	Bolt	2	
42	950600100003	Hydraulic valve group	1	Figure14.1
43	910200600030	Screw	4	
44	910200300026	Screw	4	
45	910300500005	Nut	5	
46	910200500037	Screw	4	
47	920700100002	Contactor	1	SC08HN/SC10HN
48	921300400008	Fixing plate	1	SC08HN/SC10HN
49	910200400012	Screw	2	
a	602098520056	Motor	1	SC10H/12H/14H
	602098520064	Motor	1	SC08HN/SC10HN
b	602098520063	Pump	1	SC10H/12H/14H
	602098520065	Pump	1	SC08HN/SC10HN
c	602098520062	Washer	2	SC10H/12H/14H/SC08HN/SC10HN
d	602098520061	Screw	2	SC10H/12H/14H/SC08HN/SC10HN

Figure 2.2 Pump station box assembly(SC10E/SC12E/SC14E/SC08EN/SC10EN)

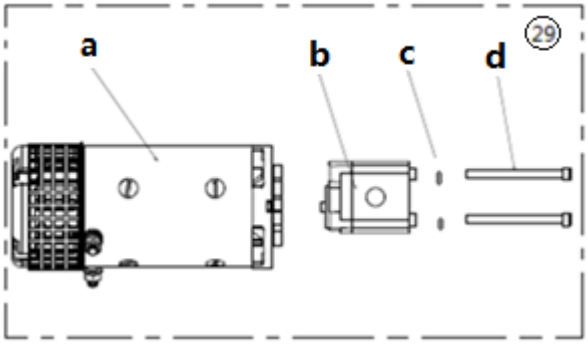

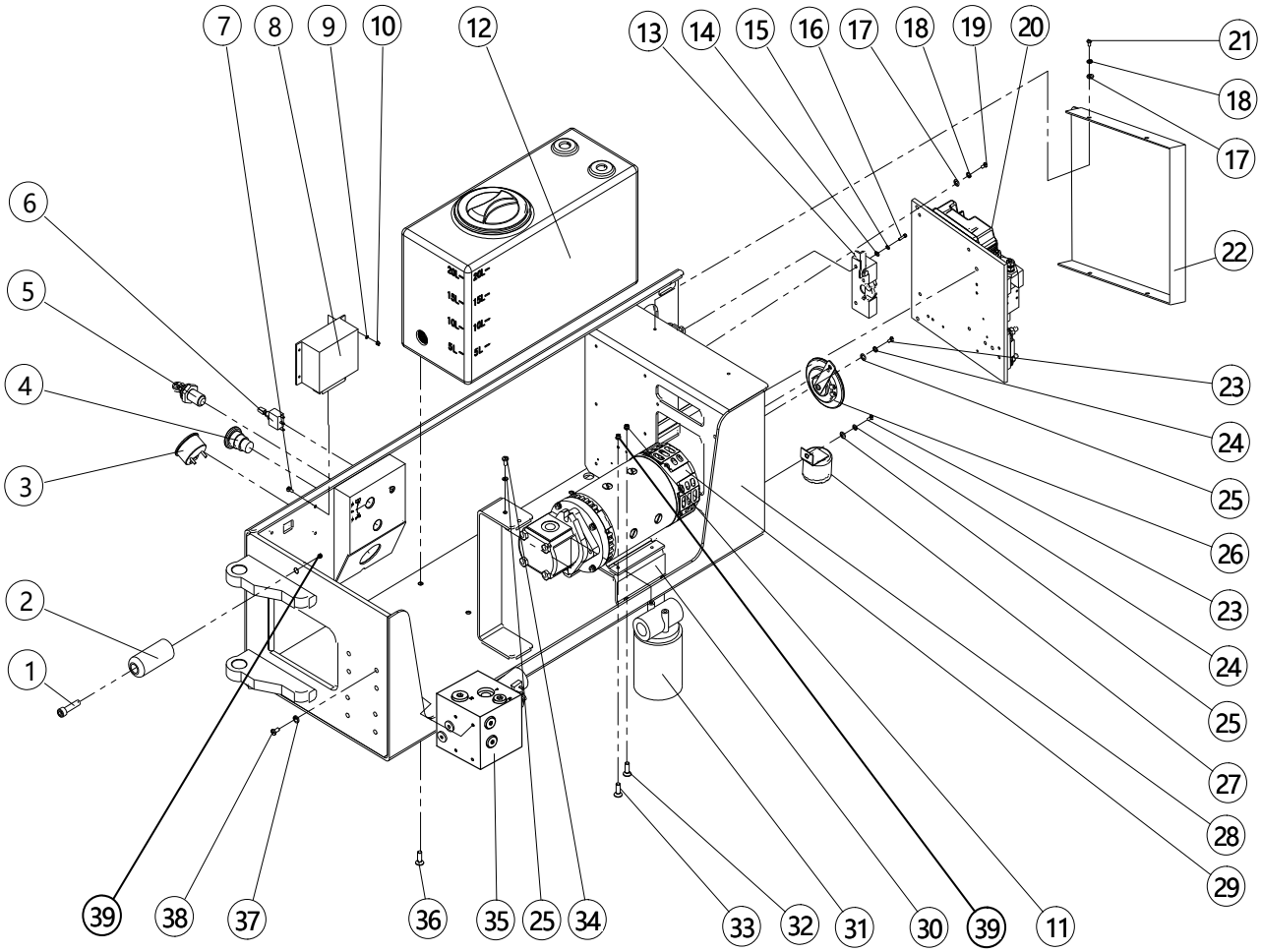

Table 2.2 Pump station box assembly

NO.	Art No.	Description	Qty.	Note
1	910200200079	Screw	1	
2	602010020008	Cushion pad	1	
3	921100100017	Meter	1	
4	920200100017	Emergency stop switch	1	
5	920200200005	Key switch	1	
6	920200700005	Button switch	1	
7	910200600008	Screw	4	
8	921400100022	Controller	1	
9	910400100003	Washer	4	
10	910300500001	Nut	4	
11	910300500004	Nut	4	
12	602019001001	Oil tank	1	
13	940800300001	Lock body of engineering vehicle	1	
14	910400100004	Washer	2	
15	910400500004	Spring washer	2	
16	910100100005	Bolt	2	
17	910400100005	Washer	4	
18	910400500005	Washer	8	
19	910200200036	Screw	8	
20	604533010000	Electronic control unit	1	Figure23
21	910200500051	Screw	4	
22	604510020001	Protection cover	1	
23	910200200053	Screw	2	
24	910400500006	Washer	2	
25	910400100006	Washer	4	
26	920500100001	Horn	1	
27	920500100002	Horn buzzer	1	
28	600510010000	Pump station box	1	
29	950900100074	Hydraulic power unit	1	a,b,c,d SC10E/SC12E/SC14E
	950900100080		1	a,b,c,d SC08EN/SC10EN
30	602010020009	Support	1	

31	951000300001	Return oil filter	1	
32	910200400026	Screw	4	
33	910100300022	Screw	4	
34	910100300020	Bolt	2	
35	950600100009	Hydraulic valve group	1	Figure14.2
36	910200600030	Screw	4	
37	910400500007	Washer	4	
38	910200300029	Screw	4	
39	910300500005	Nut	5	
a	602098520056	Motor	1	SC10E/12E/14E
	602098520064	Motor	1	SC08EN/SC10EN
b	602098520063	Pump	1	SC10E/12E/14E
	602098520065	Pump	1	SC08EN/SC10EN
c	602098520062	Washer	2	SC10E/12E/14E/SC08EN/SC10EN
d	602098520061	Screw	2	SC10E/12E/14E/SC08EN/SC10EN

Figure 3.1 Rear wheel (SC10H/SC12H/SC14H/SC08HN/SC10HN)

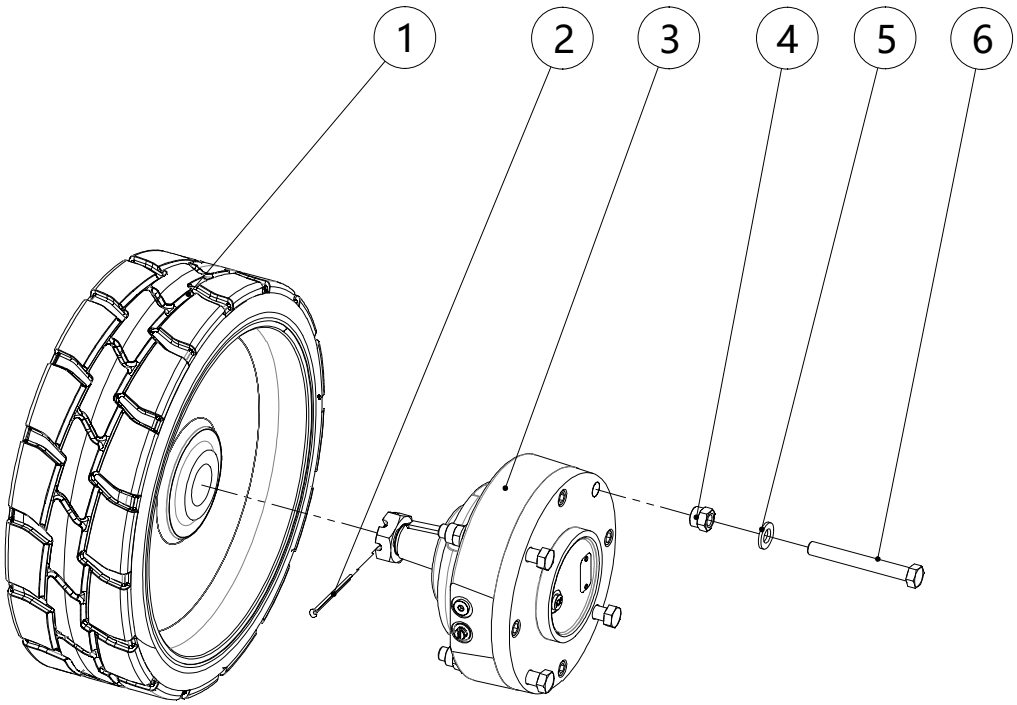

Table 3.1 Rear wheel

NO.	Art No.	Description	Qty.	Note
1	940300400004	Driving wheel	1	
2	910600600045	Pin	1	
3	940700200001	Brake	1	
4	910300500006	Nut	4	
5	910400100008	Washer	4	
6	941100200004	Bolt	4	

Figure 3.2 Rear wheel (SC10E/SC12E/SC14E/SC08EN/SC10EN)

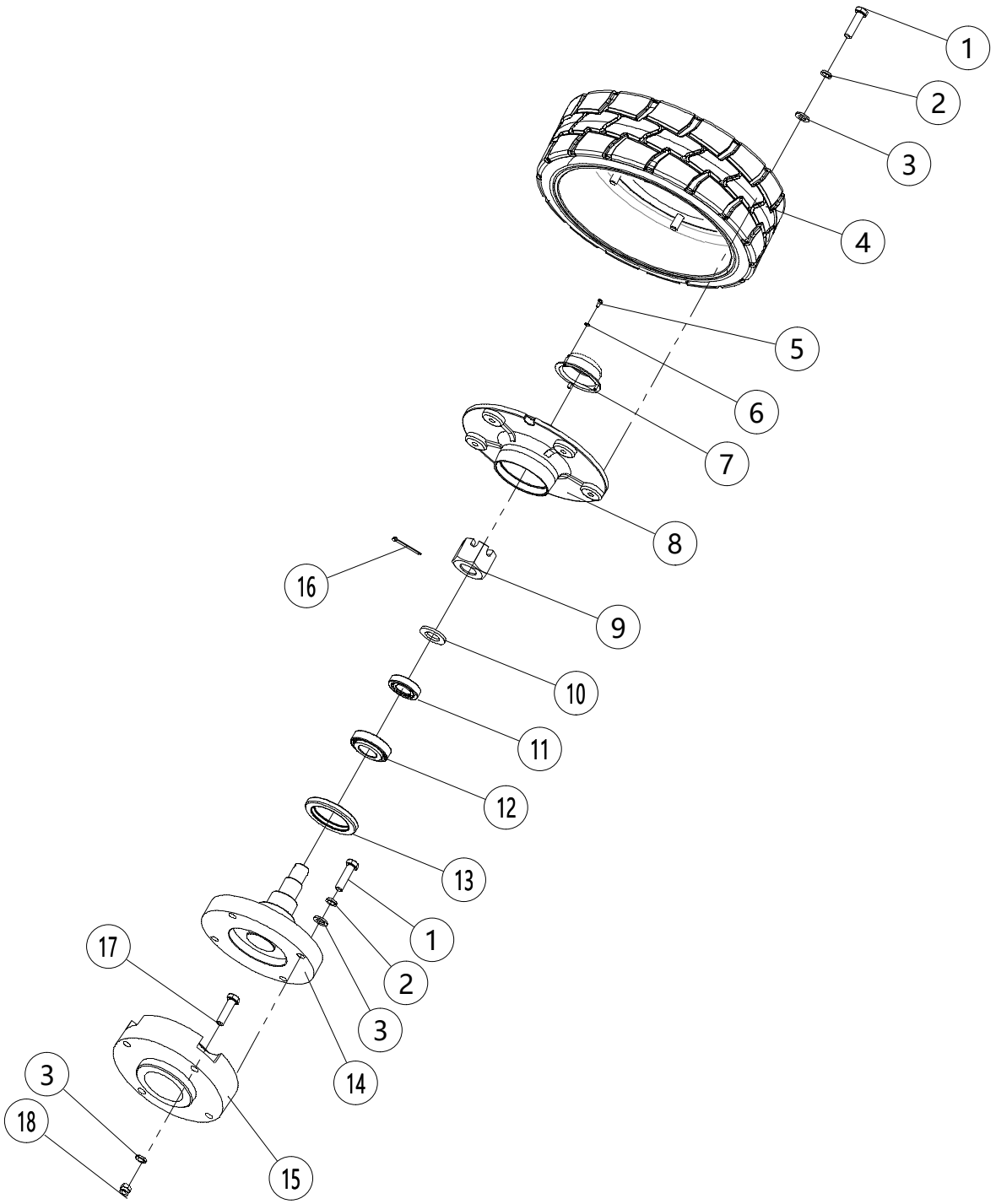

Table 3.2 Rear wheel

NO.	Art No.	Description	Qty.	Note
1	941100200006	Bolt	9	
2	910400500008	Washer	9	
3	910400100008	Washer	13	
4	940300400006	Driving wheel	1	
5	910200500021	Screw	3	
6	910400500003	Washer	3	
7	604521520004	Dust cover	1	
8	604521520003	Wheel hub connecting	1	
9	910301600001	Nut	1	
10	910400100014	Washer	1	
11	910700600026	Bearing	1	
12	910700600029	Bearing	1	
13	910800700003	Skeleton oil seal	1	
14	604521510001	Shaft seat	1	
15	604521520000	Block	1	
16	910600600045	Pin	1	
17	941100200005	Bolt	4	
18	910300500006	Nut	4	

Figure 4.1 Pothole protection mechanism(SC10H/SC12H/SC14H/SC10E/SC12E/SC14E)

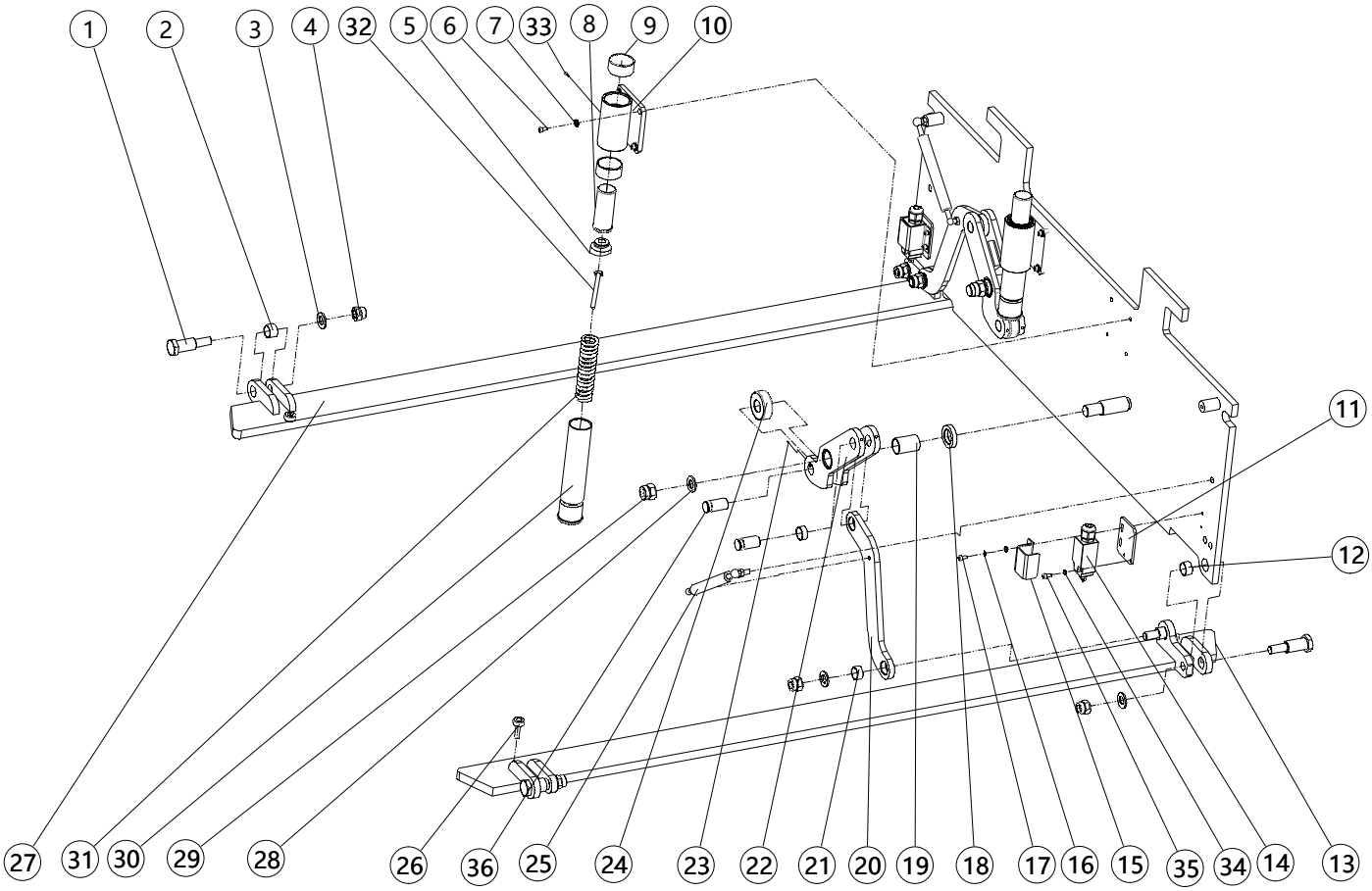

Table 4.1 Pothole protection mechanism

NO.	Art No.	Description	Qty.	Note
1	602019520019	Shaft	4	
2	940500100017	Composite sleeve	2	
3	910400100009	Washer	6	
4	910300500007	Nut	6	
5	602019520029	Gland	2	
6	910200200058	Screw	8	
7	910400500006	Spring washer	8	
8	602019520018	Shaft	2	
9	940500100040	Composite sleeve	4	
10	602019510002	Guide sleeve	2	
11	602019520022	Switch board	2	
12	940500100015	Composite sleeve	2	
13	602019510000	Support Plate	1	
14	920200600005	Limit switch	2	
15	602019520020	Protection cover	2	
16	910400500004	Spring washer	4	
17	910200300012	Screw	4	
18	602019520005	Washer	2	
19	940500100056	Composite sleeve	2	
20	602019520012	Connecting rod	2	
21	940500100014	Composite sleeve	4	
22	602019510001	Connecting rod	2	
23	910200900009	Screw	4	
24	602019520009	Roller	2	
25	940400100005	Air spring	2	
26	602019520021	Cushion pad	4	
27	602019510004	Support Plate	1	
28	910400100012	Washer	2	
29	910300500010	Nut	2	
30	602019520030	Press rod sleeve	2	
31	602019520028	Spring	2	
32	941100400003	Screw	2	

33	911200100002	Oil cup	2	
34	910400100004	Washer	8	
35	910200200027	Screw	4	
36	602019520011	Pin shaft	4	

Figure 4.2 Pothole protection mechanism

(SC08HN/SC10HN/SC08EN/SC10EN)

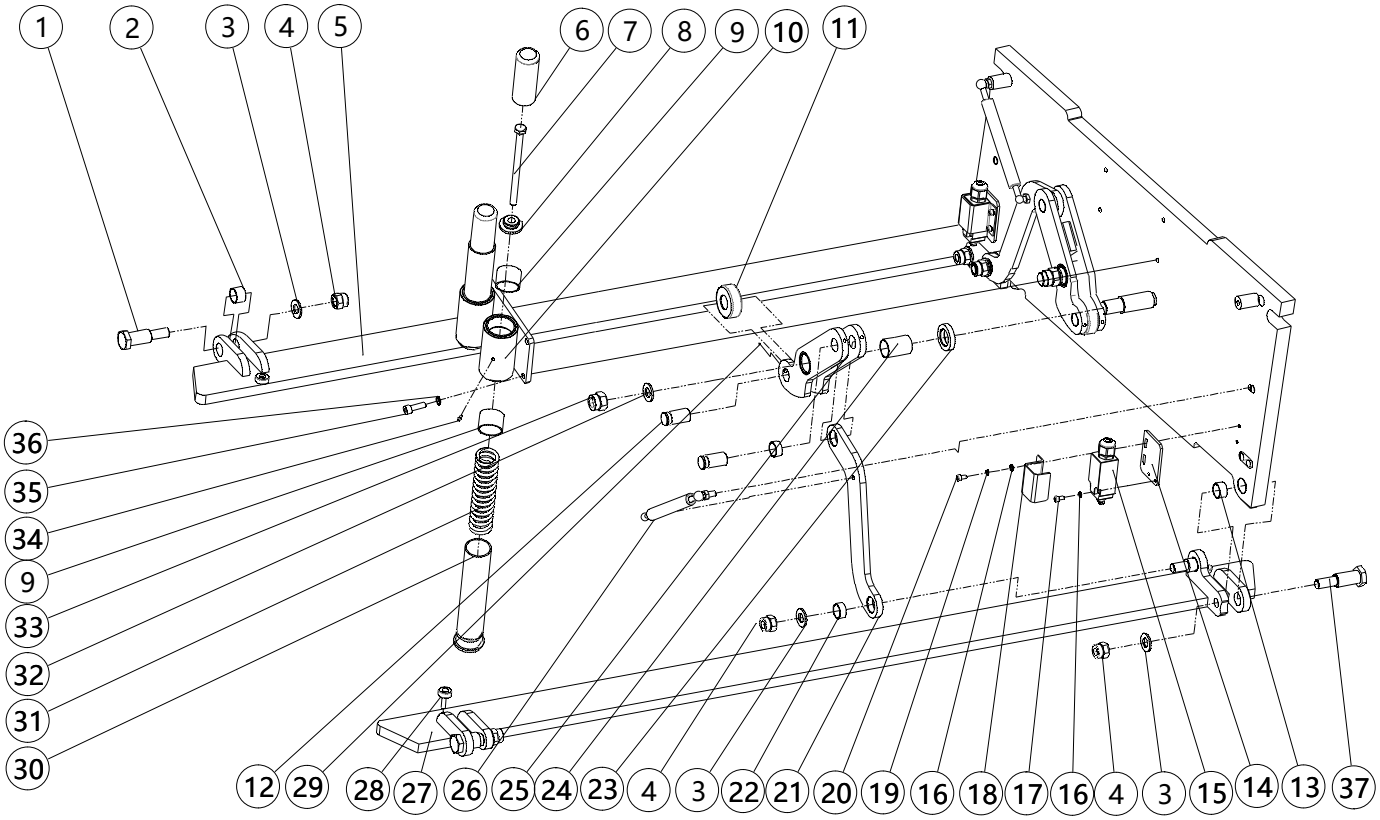

Table 4.2 Pothole protection mechanism

NO.	Art No.	Description	Qty.	Note
1	602019520019	Shaft	2	
2	940500100017	Composite sleeve	2	
3	910400100009	Washer	6	
4	910300500007	Nut	6	
5	600519510004	Support Plate	1	
6	602019520018	Shaft	2	
7	941100400003	Screw	2	
8	602019520029	Gland	2	
9	940500100040	Composite sleeve	4	
10	600519510002	Guide sleeve	2	
11	602019520009	Roller	2	
12	602019520011	Pin shaft	4	
13	940500100015	Composite sleeve	2	
14	602019520022	Switch board	2	
15	920200600005	Limit switch	2	
16	910400100004	Washer	8	
17	910200200027	Screw	4	
18	602019520020	Protection cover	2	
19	910400500004	Washer	4	
20	910200300012	Screw	4	
21	600519520001	Connecting rod	2	
22	940500100014	Composite sleeve	4	
23	602019520005	Washer	2	
24	940500100056	Composite sleeve	2	
25	600519510001	Connecting rod	2	
26	940400100005	Air spring	2	
27	600519510000	Support Plate	1	
28	602019520021	Cushion pad	2	
29	910200900009	Screw	4	
30	602019520030	Press rod sleeve	2	
31	600519520004	Spring	2	
32	910400100012	Washer	2	

33	910300500010	Nut	2	
34	911200100002	Oil cup	2	
35	910200200058	Screw	4	
36	910400500006	Washer	4	
37	600519520019	Shaft	2	

Figure 5 Battery box assembly

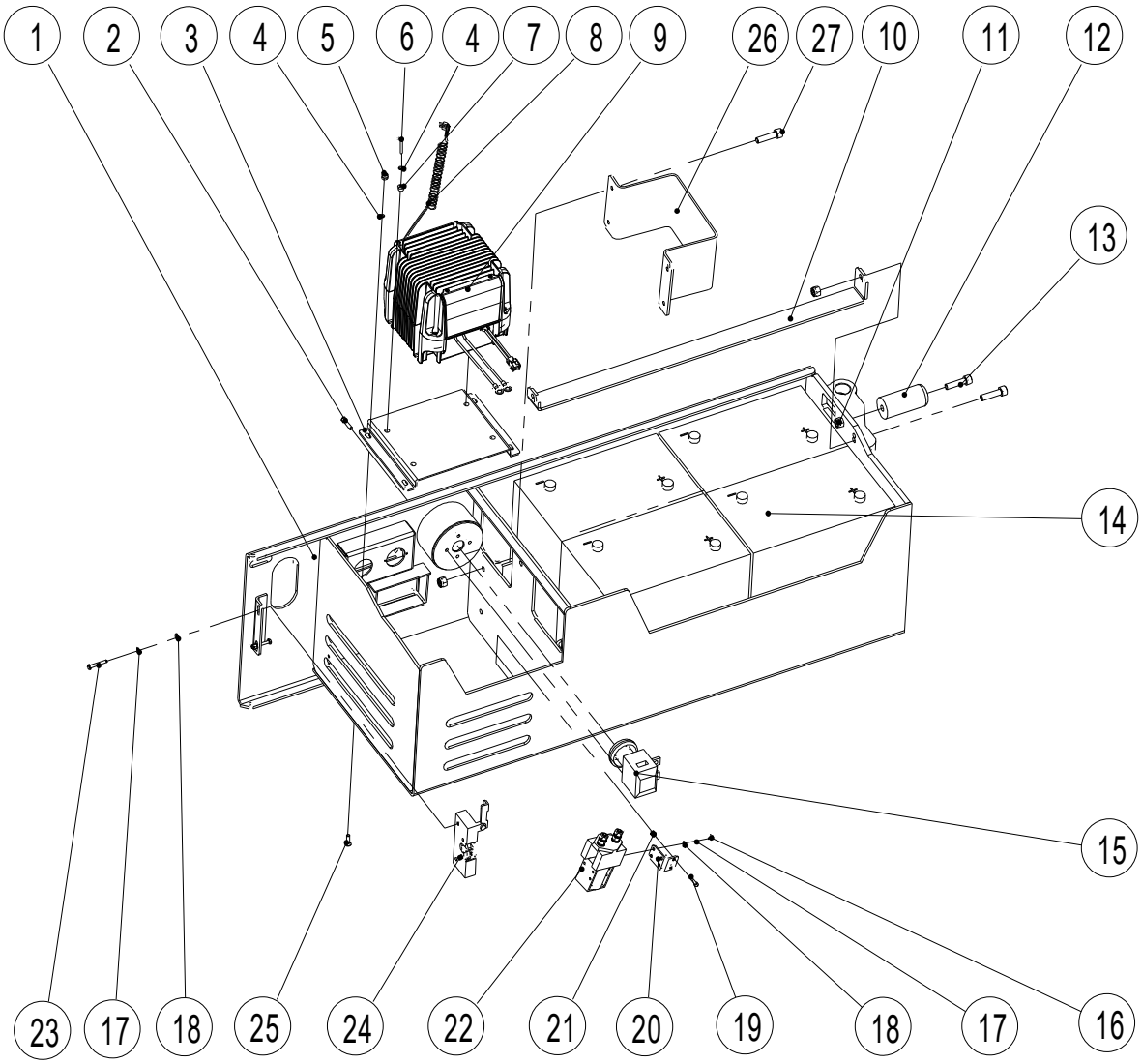

Table 5 Battery box assembly

NO.	Art No.	Description	Qty.	Note
1	600521510002	Battery box	1	
2	910200300012	Screw	2	
3	602021520073	Plate	1	
4	910400100005	Washer	8	
5	910300500003	Nut	4	
6	910200200036	Screw	4	
7	910300500004	Nut	10	
8	921500200020	Spring line	1	(Asian)
	921500200017			(Europe)
	921500200014			(America)
	921500200015			(Australia)
	921500200018			(Italy)
	921500200019			(Switzerland)
	921500200016			(Britain)
	921500200036			(Israel)
	921500200041			(Afghanistan)
	921500200069			(Brazil)
9	602036510002	Charger	1	SC10H/SC12H/SC10E/SC12E SC08HN/SC10HN SC08EN/SC10EN
	602536510002			SC14H/SC14E
10	600521510013	Plate	1	
11	910300500005	Nut	1	
12	602010020008	Cushion pad	1	
13	910200200079	Screw	1	
14	920600100087	Battery	4	SC10H/SC12H/SC10E/SC12E SC08HN/SC10HN SC08EN/SC10EN
	920600100023			SC14H/SC14E
15	920200100004	Emergency stop switch	1	
16	910200500037	Screw	2	
17	910400500004	Washer	6	
18	910400100004	Washer	6	

19	910200400012	Screw	2	
20	921300400008	Fixing plate	1	SC08EN/SC10EN
21	910300500002	Nut	4	
22	920700100002	Contactor	1	SC08EN/SC10EN
23	910100100005	Bolt	2	
24	940800300007	Lock body of engineering vehicle	1	
25	910200400018	Screw	4	
26	600521520014	Plate	1	
27	910200200058	Screw	6	

Figure 6.1 Steering mechanism(SC10H/SC12H/SC14H)

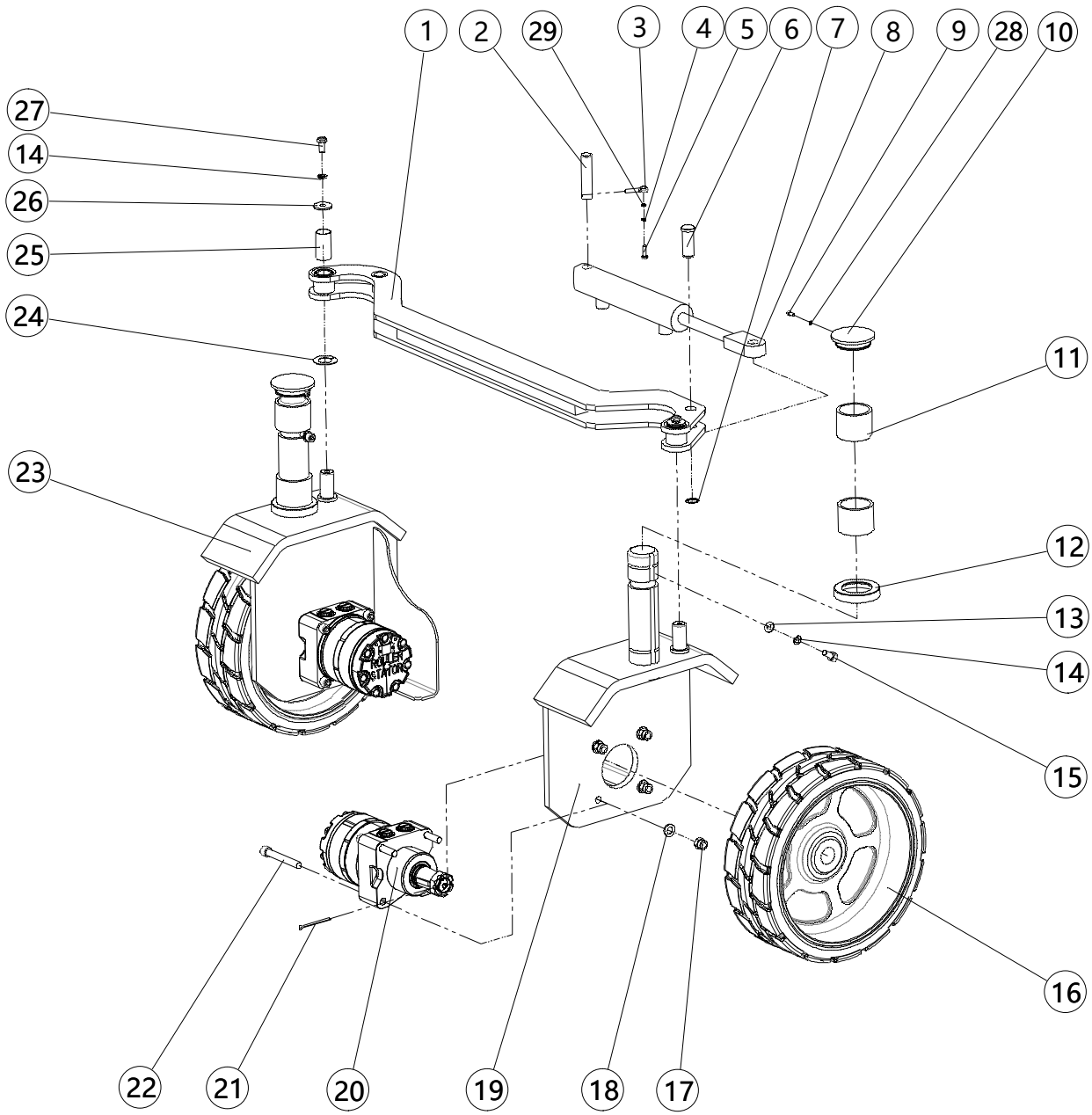

Table 6.1 Steering mechanism(SC10H/SC12H/SC14H)

NO.	Art No.	Description	Qty.	Note
1	602016010000	Connecting rod	1	
2	602016020007	Pin shaft	1	
3	602016020008	Pin	1	
4	910400500005	Spring washer	1	
5	910100300011	Bolt	1	
6	602016020005	Pin shaft	1	
7	910401300011	Collar	1	
8	602015010000	Cylinder	1	Figure21
9	910200300012	Screw	2	
10	602016020006	End cover	2	
11	940500300003	Bearing	4	
12	602015520000	Gasket	2	
13	910400100007	Washer	2	
14	910400500007	Spring washer	4	
15	910200200075	Screw	2	
16	940300400004	Driving wheel	2	
17	910300500006	Nut	8	
18	910400100008	Washer	8	
19	602015510001	Wheel carrier	1	
20	950800100002	Motor	2	
21	910600600045	pin	2	
22	941100400005	Screw	8	
23	602015510000	Wheel carrier	1	
24	940600600001	Washer	2	
25	940500100056	Composite sleeve	2	
26	910400200004	Washer	2	
27	910100300035	Bolt	2	
28	910400500004	Washer	2	
29	910400100005	Washer	1	

Figure 6.2 Steering mechanism(SC10E/SC12E/SC14E)

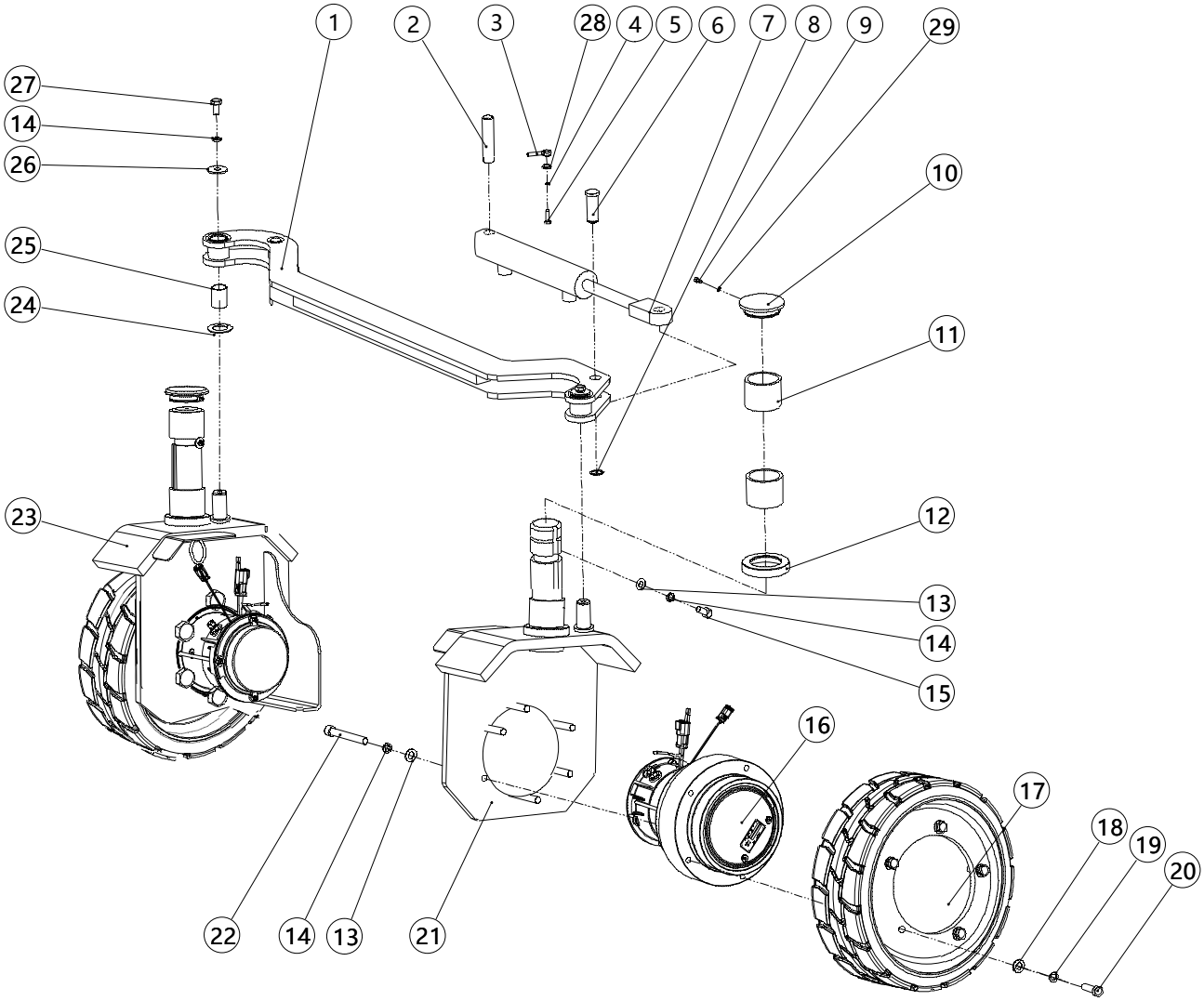

Table 6.2 Steering mechanism

NO.	Art No.	Description	Qty.	Note
1	602016010000	Connecting rod	1	
2	602016020007	Pin shaft	1	
3	602016020008	Pin	1	
4	910400500005	Washer	1	
5	910100300011	Bolt	1	
6	602016020005	Pin shaft	1	
7	910401300011	Ring-round	1	
8	602015010000	Cylinder	1	Figure21
9	910200300012	Screw	2	
10	602016020006	End cover	2	
11	940500300003	Bearing	4	
12	602015520000	Gasket	2	
13	910400100007	Washer	14	
14	910400500007	Washer	16	
15	910200200075	Screw	2	
16	602098520004	Reducer	2	
17	940300400006	Driving wheel	2	
18	910400100008	Washer	10	
19	910400500008	Washer	10	
20	941100200006	Bolt	10	
21	604515520004	Wheel carrier	1	
22	941100200003	Bolt	12	
23	604515510000	Wheel carrier	1	
24	940600600001	Gasket	2	
25	940500100056	Composite sleeve	2	
26	910400200004	Washer	2	
27	910100300035	Bolt	2	
28	910400100005	Washer	1	
29	910400500004	Washer	2	

Figure 6.3 Steering mechanism(SC08HN/SC10HN)

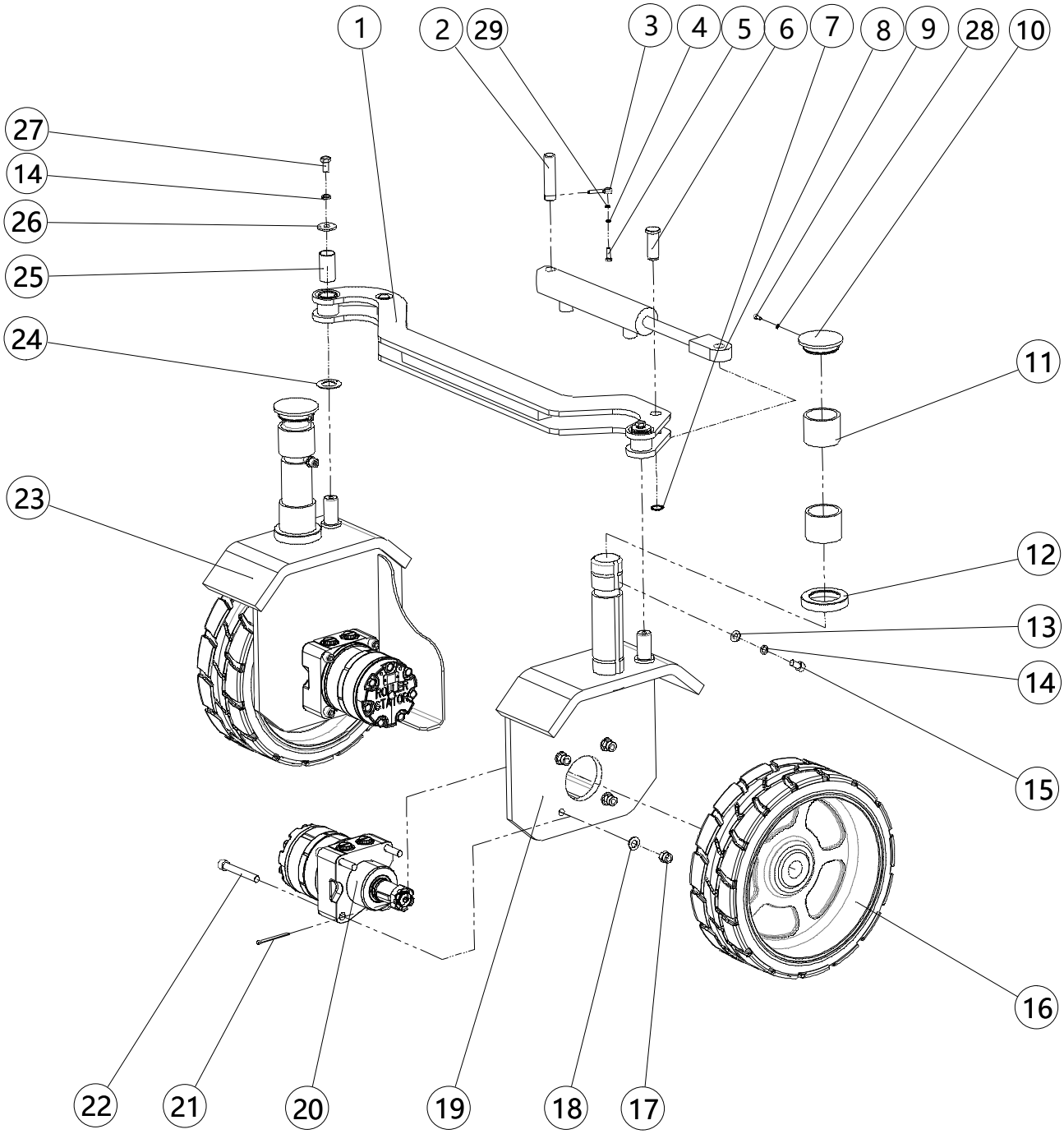

Table 6.3 Steering mechanism

NO.	Art No.	Description	Qty.	Note
1	600516010000	Connecting rod	1	
2	602016020007	Pin shaft	1	
3	602016020008	Pin	1	
4	910400500005	Spring washer	1	
5	910100300011	Bolt	1	
6	602016020005	Pin shaft	1	
7	910401300011	Collar	1	
8	602015010000	Cylinder	1	Figure21
9	910200300012	Screw	2	
10	602016020006	End cover	2	
11	940500300003	Bearing	4	
12	602015520000	Gasket	2	
13	910400100007	Washer	2	
14	910400500007	Spring washer	4	
15	910200200075	Screw	2	
16	940300400004	Driving wheel	2	
17	910300500006	Nut	8	
18	910400100008	Washer	8	
19	602015510001	Wheel carrier	1	
20	950800100003	Motor	2	
21	910600600045	pin	2	
22	941100400005	Screw	8	
23	602015510000	Wheel carrier	1	
24	940600600001	Washer	2	
25	940500100056	Composite sleeve	2	
26	910400200004	Washer	2	
27	910100300035	Bolt	2	
28	910400500004	Washer	2	
29	910400100005	Washer	1	

Figure 6.4 Steering mechanism(SC08EN/SC10EN)

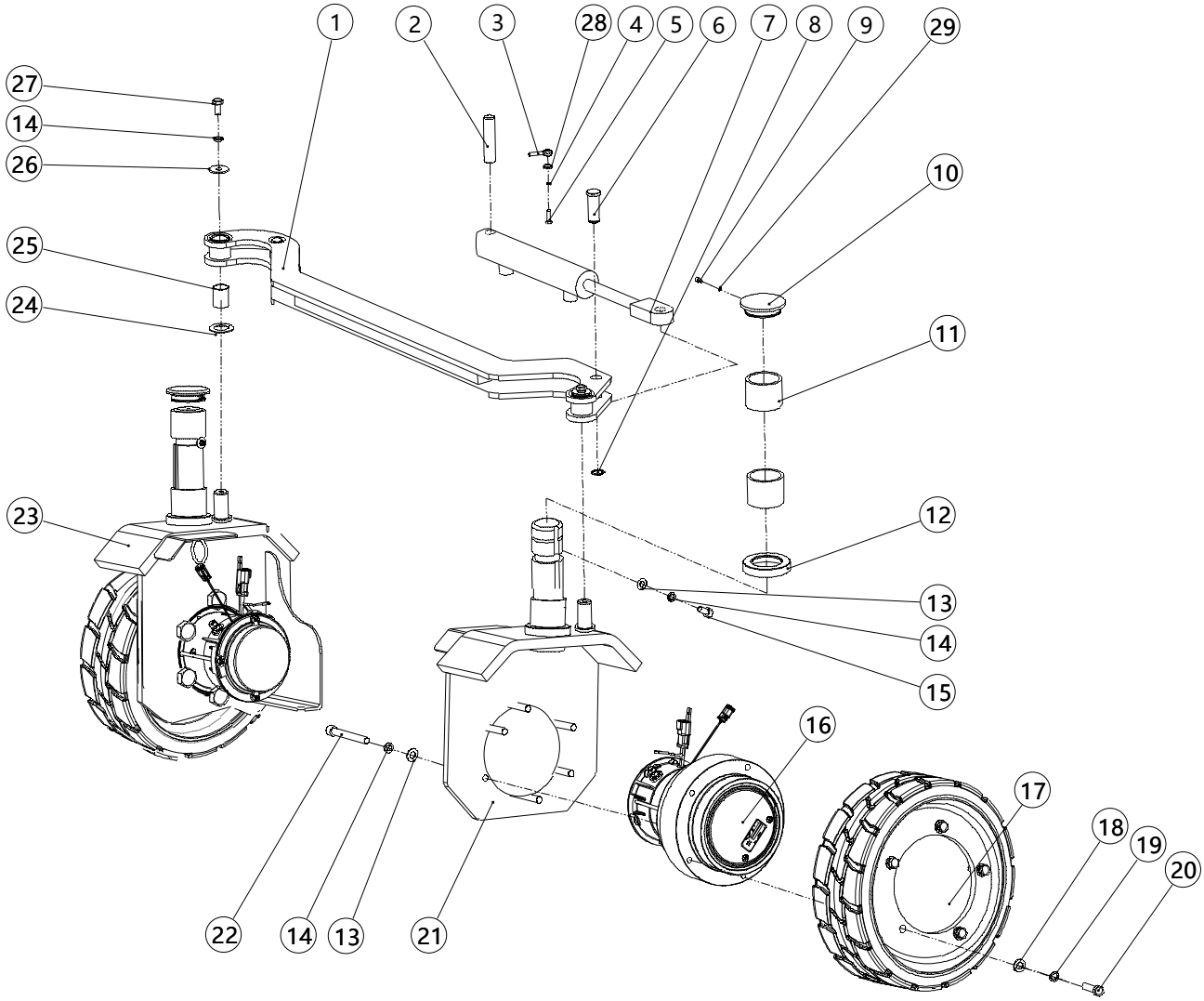

Table 6.4 Steering mechanism

NO.	Art No.	Description	Qty.	Note
1	600516010000	Connecting rod	1	
2	602016020007	Pin shaft	1	
3	602016020008	Pin	1	
4	910400500005	Washer	1	
5	910100300011	Bolt	1	
6	602016020005	Pin shaft	1	
7	910401300011	Ring-round	1	
8	602015010000	Cylinder	1	Figure21
9	910200300012	Screw	2	
10	602016020006	End cover	2	
11	940500300003	Bearing	4	
12	602015520000	Gasket	2	
13	910400100007	Washer	14	
14	910400500007	Washer	16	
15	910200200075	Screw	2	
16	602098520004	Reducer	2	
17	940300400006	Driving wheel	2	
18	910400100008	Washer	10	
19	910400500008	Washer	10	
20	941100200006	Bolt	10	
21	604515520004	Wheel carrier	1	
22	941100200003	Bolt	12	
23	604515510000	Wheel carrier	1	
24	940600600001	Gasket	2	
25	940500100056	Composite sleeve	2	
26	910400200004	Washer	2	
27	910100300035	Bolt	2	
28	910400100005	Washer	1	
29	910400500004	Washer	2	

Figure 7 Parts and components of scissors(SC10H/SC10E)

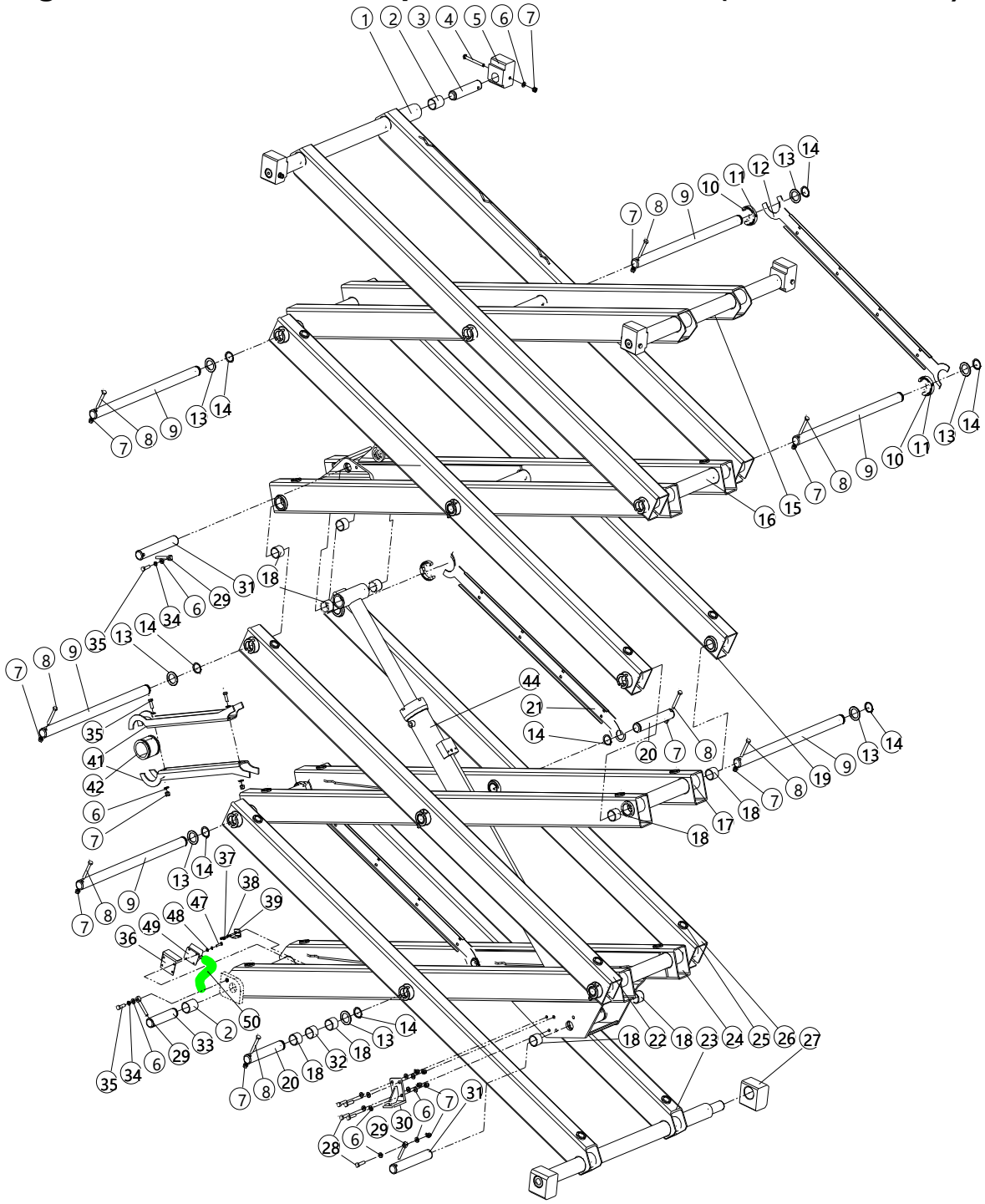

Table 7 Parts and components of scissors

(SC10H/SC10E)

NO.	Art No.	Description	Qty.	Note
1	602053010008	Scissors	1	
2	940500300002	Bearing	6	
3	602053020024	Shaft	4	
4	910100100042	Bolt	4	
5	602053020029	Slider	4	
6	910400100007	Washer	28	
7	910300500005	Nut	28	
8	910100100038	Bolt	14	
9	602053020025	Shaft	8	
10	602053020039	Collar	4	
11	910200600008	Screw	4	
12	602053020034	Fixed Plate	1	
13	602053020037	Gasket	10	
14	910401600001	Collar	12	
15	601553010001	Scissor arm	1	
16	601553010000	Scissor arm	1	
17	602053010001	Scissor arm	1	
18	940500300001	Bearing	28	
19	601553010002	Scissor arm	1	
20	602053020026	Shaft	4	
21	602053020033	Fixed Plate	2	
22	602053010006	Scissor arm	1	
23	602053010005	Scissor arm	1	
24	602053010000	Scissor arm	1	
25	602053020038	Cushion pad	24	

26	602053010007	Scissor arm	2	
27	602053020030	Slider	2	
28	910200200078	Screw	9	
29	602053020041	Shaft	3	
30	602053010009	Press rod	2	
31	602053020028	Shaft	2	
32	602053020040	Spacer sleeve	4	
33	602053020027	Shaft	1	
34	910400500007	Spring washer	2	
35	910100300037	Bolt	4	
36	602053020031	Fixed Plate	1	
37	910200200023	Screw	2	
38	910400500004	Spring washer	6	
39	602053020032	Contact Plate	1	
41	602053020035	Support arm	2	
42	602053020036	Slider sleeve	2	
44	602023501007	Cylinder	1	Figure19
47	910200200022	Screw	4	
48	910400100004	Washer	4	
49	602066010000	Sensor	1	
50	602066010001	Wiring harness	1	

Figure 8 Parts and components of scissors(SC12H/SC12E)

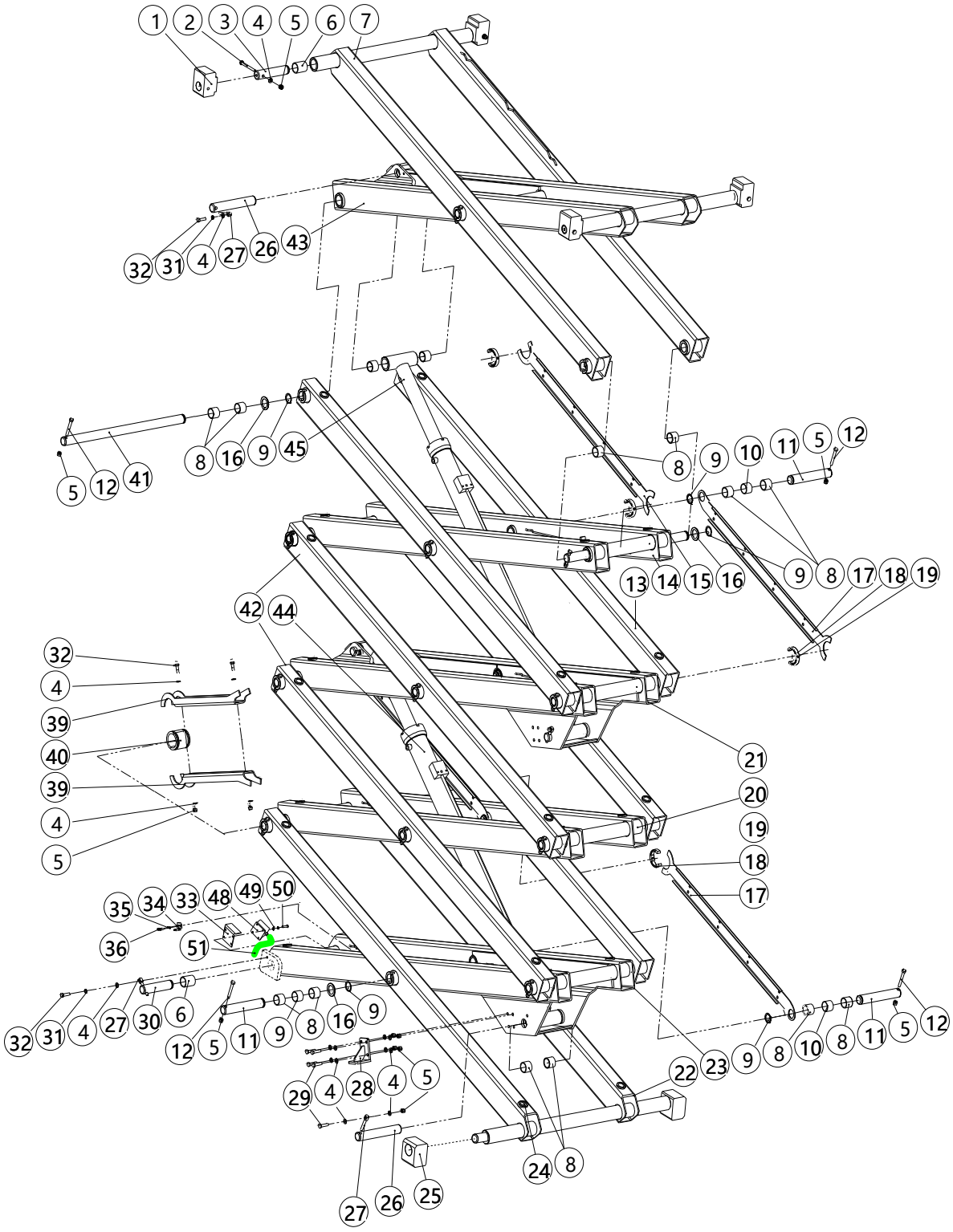

Table 8 Parts and components of scissors

(SC12H/SC12E)

NO.	Art No.	Description	Qty.	Note
1	602053020029	Slider	4	
2	910100100042	Bolt	4	
3	602053020024	Shaft	4	
4	910400100007	Washer	31	
5	910300500005	Nut	34	
6	940500300002	Bearing	6	
7	602053010008	Scissor arm	1	
8	940500300001	Bearing	42	
9	910401600001	Collar	17	
10	602053020040	Spacer sleeve	8	
11	602053020026	Shaft	8	
12	910100100038	Bolt	19	
13	602053010006	Scissor arm	3	
14	602053010003	Scissor arm	1	
15	602053020034	Fixed Plate	1	
16	602053020037	Gasket	14	
17	602053020033	Fixed Plate	3	
18	602053020039	Collar	5	
19	910200600008	Screw	5	
20	602053010001	Scissor arm	1	
21	602053010002	Scissor arm	1	
22	602053010005	Scissor arm	1	
23	602053010000	Scissor arm	1	
24	602053020038	Cushion pad	32	
25	602053020030	Slider	2	
26	602053020028	Shaft	4	

27	602053020041	Shaft	5	
28	602053010009	Press rod	2	
29	910200200078	Screw	10	
30	602053020027	Shaft	1	
31	910400500007	Spring washer	4	
32	910100300037	Bolt	5	
33	602053020031	Fixed Plate	1	
34	602053020032	Contact Plate	1	
35	910400500004	Spring washer	6	
36	910200200023	Screw	2	
39	602053020035	Support arm	2	
40	602053020036	Slider sleeve	2	
41	602053020025	Shaft	9	
42	602053010007	Scissor arm	3	
43	602053010004	Scissor arm	1	
44	602023501007	Cylinder	1	Figure19
45	602023501006	Cylinder	1	Figure18
48	602066010000	Sensor	1	
49	910400100004	Washer	4	
50	910200200022	Screw	4	
51	602066010001	Wiring harness	1	

Figure 9 Parts and components of scissors(SC14H/SC14E)

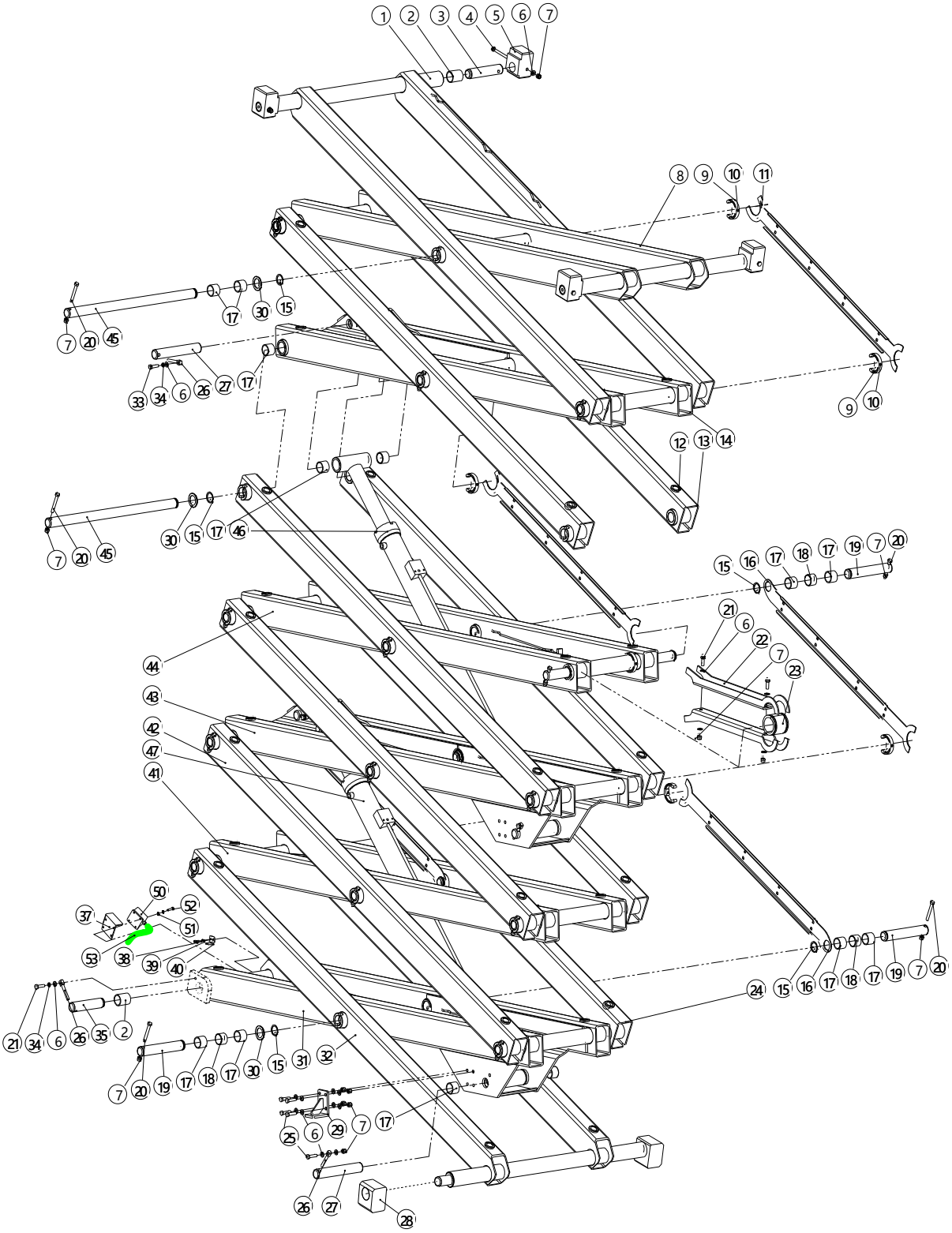

Table 9 Parts and components of scissors

(SC14H/SC14E)

NO.	Art No.	Description	Qty.	Note
1	602053010008	Scissor arm	1	
2	940500300002	Bearing	6	
3	602053020024	Shaft	4	
4	910100100042	Bolt	4	
5	602053020029	Slider	4	
6	910400100007	Washer	35	
7	910300500005	Nut	40	
8	601553010001	Scissor arm	1	
9	602053020039	Collar	7	
10	910200600008	Screw	7	
11	602053020034	Fixed plate	2	
12	602053020038	Cushion pad	40	
13	601553010002	Scissor arm	1	
14	601553010000	Scissor arm	1	
15	910401600001	Collar	20	
16	602053020033	Fixed plate	3	
17	940500300001	Bearing	48	
18	602053020040	Spacer sleeve	8	
19	602053020026	Shaft	8	
20	910100100038	Bolt	22	
21	910100300037	Bolt	7	
22	602053020035	Support arm	4	
23	602053020036	Sliding sleeve	4	
24	602053010006	Scissor arm	3	
25	910200200078	Bolt	10	
26	602053020041	Retaining pin shaft	5	

27	602053020028	Shaft	4	
28	602053020030	Slider	2	
29	602053010009	Press rod	2	
30	602053020037	Gasket	17	
31	602053010000	Scissor arm	1	
32	602053010005	Scissor arm	1	
34	910400500007	Washer	3	
35	602053020027	Shaft	1	
37	602053020031	Fixed Plate	1	
38	910200200023	Screw	2	
39	910400500004	Washer	6	
40	602053020032	Contact Plate	1	
41	602053010001	Scissor arm	1	
42	602053010007	Scissor arm	4	
43	602053010002	Scissor arm	1	
44	602053010003	Scissor arm	1	
45	602053020025	Shaft	12	
46	602023501006	Cylinder	1	Figure18
47	602023501007	Cylinder	1	Figure19
50	602066010000	Sensor	1	
51	910400100004	Washer	4	
52	910200200022	Screw	4	
53	602066010001	Wiring harness	1	

Figure 10 Parts and components of scissors(SC08HN/SC08EN)

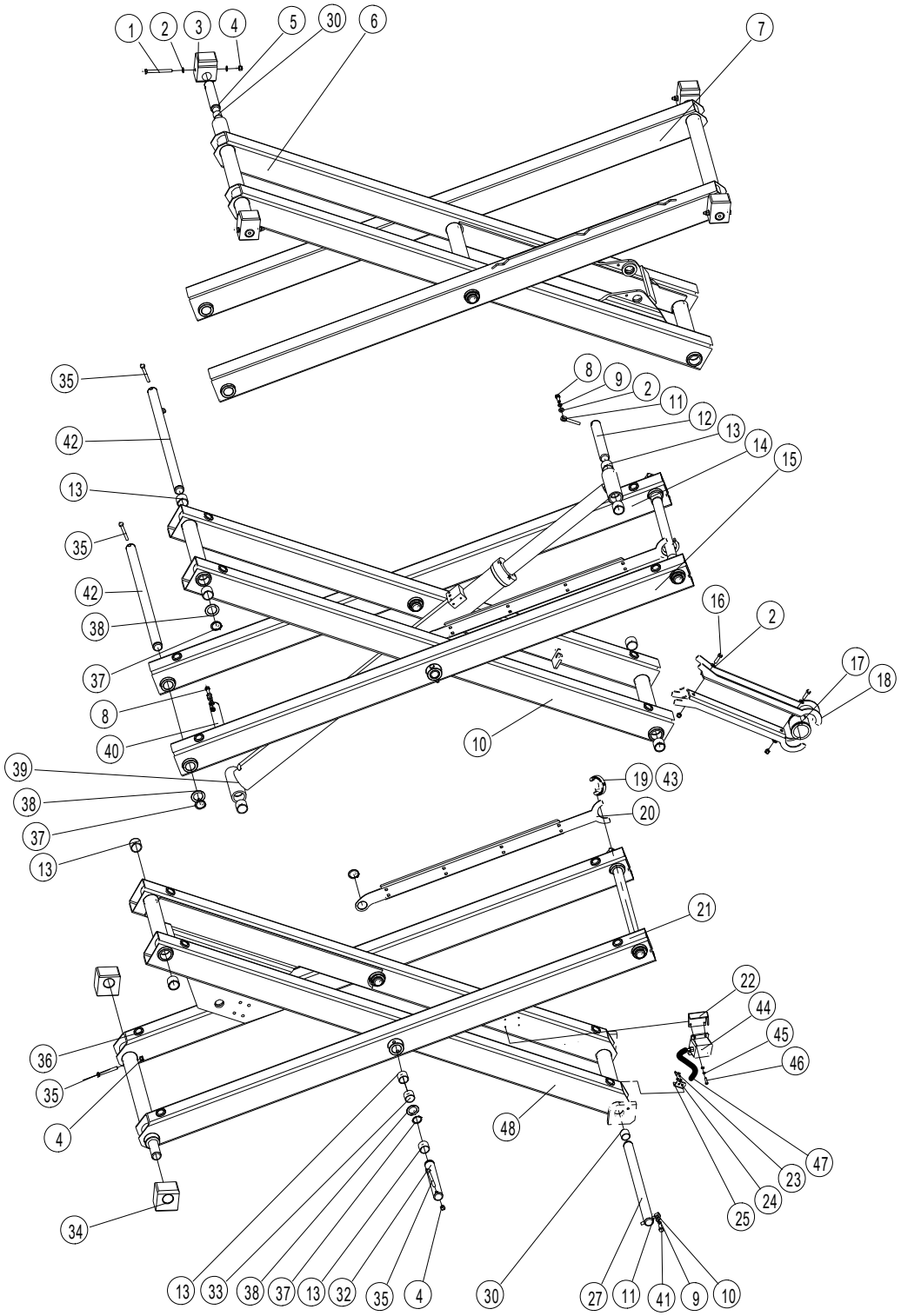

Table 10 Parts and components of scissors

NO.	Art No.	Description	Qty.	Note
1	910100100042	Bolt	4	
2	910400100007	Washer	13	
3	602053020029	Slider	4	
4	910300500005	Nut	18	
5	602053020024	Shaft	4	
6	600553010000	Scissor arm	1	
7	600553010002	Scissor arm	1	
8	910100300039	Bolt	2	
9	910400500007	Washer	3	
10	602053010000	Scissor arm	1	
11	602053020041	Shaft	3	
12	602053020028	Shaft	2	
13	940500300001	Bearing	21	
14	602053010007	Scissor arm	1	
15	602053010006	Scissor arm	1	
16	910100300037	Bolt	2	
17	602053020036	Sliding sleeve	2	
18	602053020035	Support arm	2	
19	602053020039	Collar	2	
20	602053020033	Fixed Plate	2	
21	600553010001	Scissor arm	1	
22	602053020031	Fixed Plate	1	
23	910200200023	Screw	2	
24	910400500004	Washer	2	
25	602053020032	Plate	1	
27	602053020027	Shaft	1	
30	940500300002	Bearing	6	
32	602053020026	Shaft	4	
33	602053020040	Spacer sleeve	4	

34	602053020030	Slider	2	
35	910100100038	Bolt	9	
36	602053020038	Cushion pad	16	
37	910401600001	Collar	9	
38	602053020037	Washer	7	
39	602023501007	Cylinder	1	Figure19
40	602053020028	Shaft	2	
41	910100300038	Bolt	1	
42	602053020025	Shaft	5	
43	910200600008	Screw	2	
44	602066010000	Sensor	1	
45	910400100004	Washer	4	
46	910200200022	Screw	4	
47	601066010001	Wiring harness	1	
48	602053010000	Scissor arm	1	

Figure 11 Parts and components of scissors(SC10HN/SC10EN)

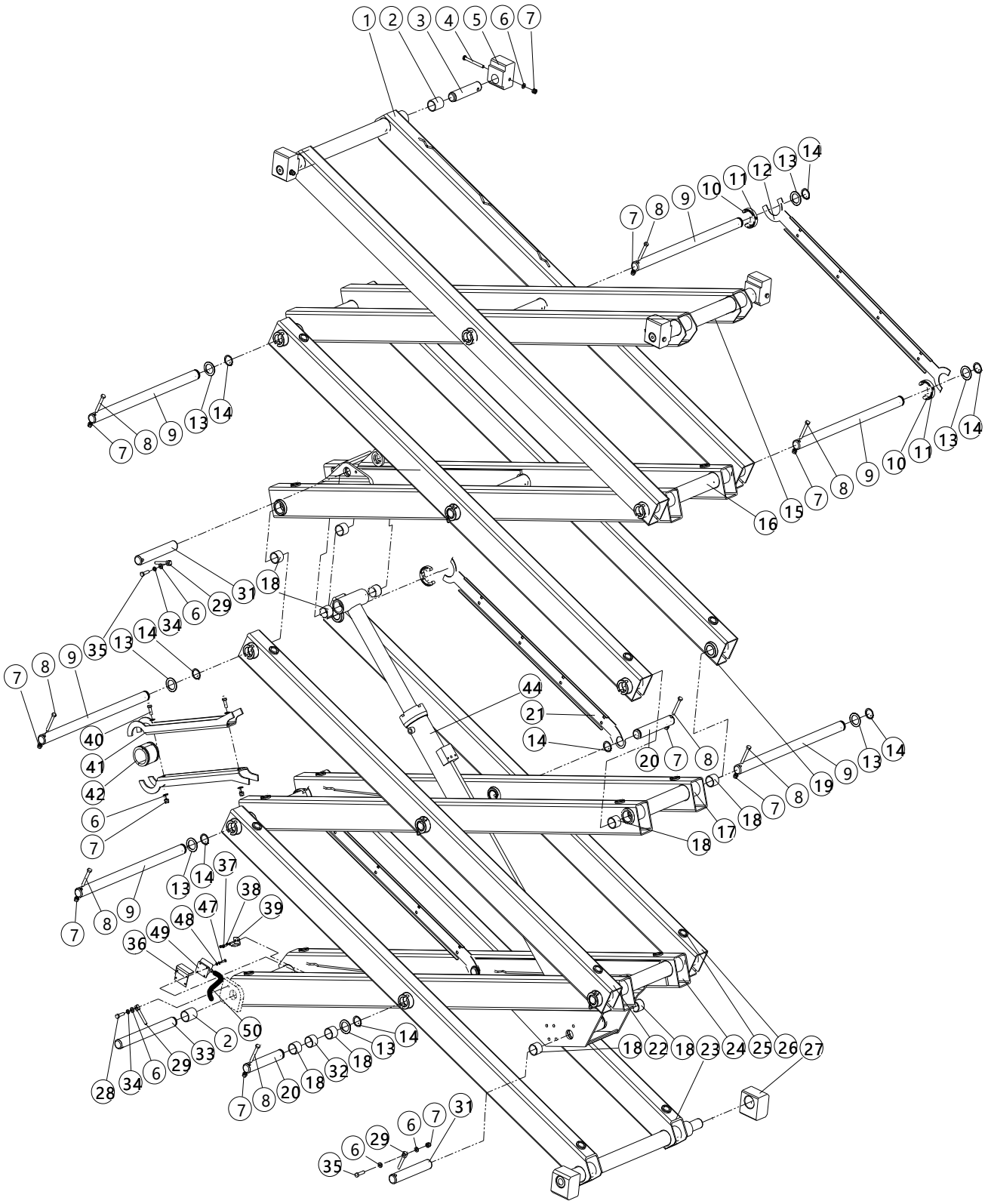

Table 11 Parts and components of scissors

NO.	Art No.	Description	Qty.	Note
1	600553010002	Scissor arm	1	
2	940500300002	Bearing	6	
3	602053020024	Shaft	4	
4	910100100042	Bolt	4	
5	602053020029	Slider	4	
6	910400100007	Washer	13	
7	910300500005	Nut	20	
8	910100100038	Bolt	14	
9	602053020025	Shaft	8	
10	602053020039	Collar	4	
11	910200600008	Screw	4	
12	602053020034	Fixed Plate	1	
13	602053020037	Washer	10	
14	910401600001	Collar	12	
15	601053010000	Scissor arm	1	
16	601553010000	Scissor arm	1	
17	602053010001	Scissor arm	1	
18	940500300001	Bearing	28	
19	601553010002	Scissor arm	1	
20	602053020026	Shaft	4	
21	602053020033	Fixed Plate	2	
22	602053010007	Scissor arm	2	
23	600553010001	Scissor arm	1	
24	602053010000	Scissor arm	1	
25	602053020038	Cushion pad	24	
26	602053010006	Scissor arm	1	
27	602053020030	Slider	2	

28	910100300038	Bolt	1	
29	602053020041	Shaft	3	
31	602053020028	Shaft	2	
32	602053020040	Spacer sleeve	4	
33	602053020027	Shaft	1	
34	910400500007	Washer	1	
35	910100300039	Bolt	2	
36	602053020031	Fixed Plate	1	
37	910200200023	Screw	2	
38	910400500004	Washer	2	
39	602053020032	Contact Plate	1	
40	910100300037	Bolt	2	
41	602053020035	Support arm	2	
42	602053020036	Sliding sleeve	2	
44	602023501007	Cylinder	1	Figure 19
47	910200200022	Screw	4	
48	910400100004	Washer	4	
49	602066010000	Sensor	1	
50	601066010001	Wiring harness	1	

`

Figure 12.1 Extended platform assembly(SC10H/SC12H/SC14H/SC10E/SC12E/SC14E)

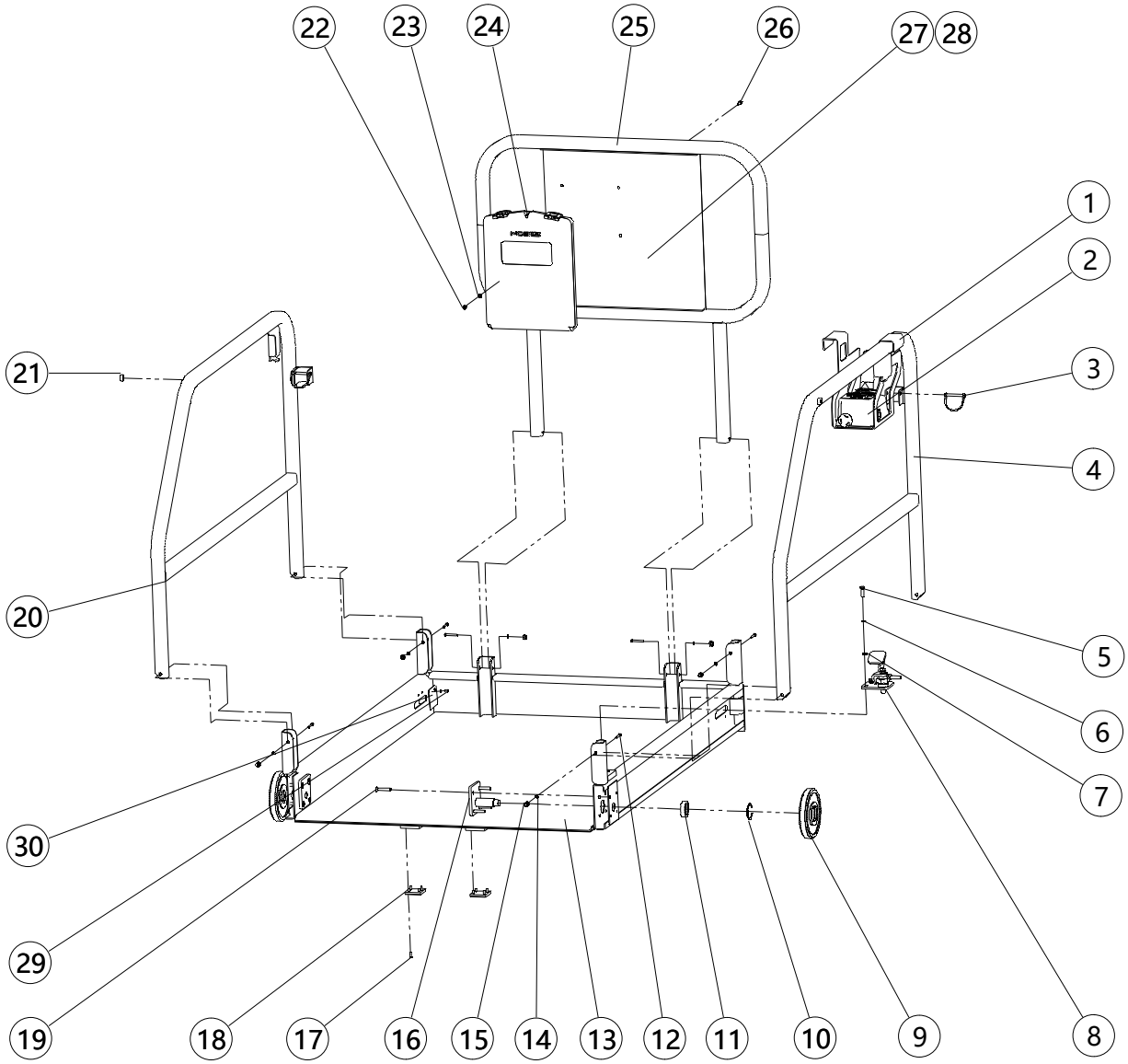

Table 12.1 Extended platform assembly

NO.	Art No.	Description	Qty.	Note
1	602011010000	Hanging Plate	1	
2	922100100004	Controller	1	Figure15
3	602053501003	Steel wire sleeve	2	
4	602053510008	Rail	1	
5	910100300022	Bolt	2	
6	910400500006	Washer	2	
7	910400100006	Washer	2	
8	602053501007	Pedal lock	1	Figure16.1
9	602053520073	Roller	2	
10	910401400013	Collar	2	
11	910700200019	Bearing	2	
12	910100100026	Bolt	6	
13	602053510005	Platform	1	
14	910400100006	Washer	12	
15	910300500004	Nut	6	
16	602053510009	Mounting seat	3	
17	910200200032	Screw	8	
18	602053520066	Steeping	2	
19	910200400031	Screw	8	
20	602053510007	Rail	1	
21	602019520021	Cushion pad	2	
22	910300500003	Nut	4	
23	910400100005	Washer	8	
24	610053520093	File box	1	
25	602053510006	Rail	1	
26	910100300011	Bolt	4	
27	602053520067	Hanging plate	1	
28	910500200003	Rivet	4	
29	910200300016	Screw	4	
30	602053520086	Plate	1	

Figure 12.2 Extended platform assembly

(SC08HN/SC10HN/SC08EN/SC10EN)

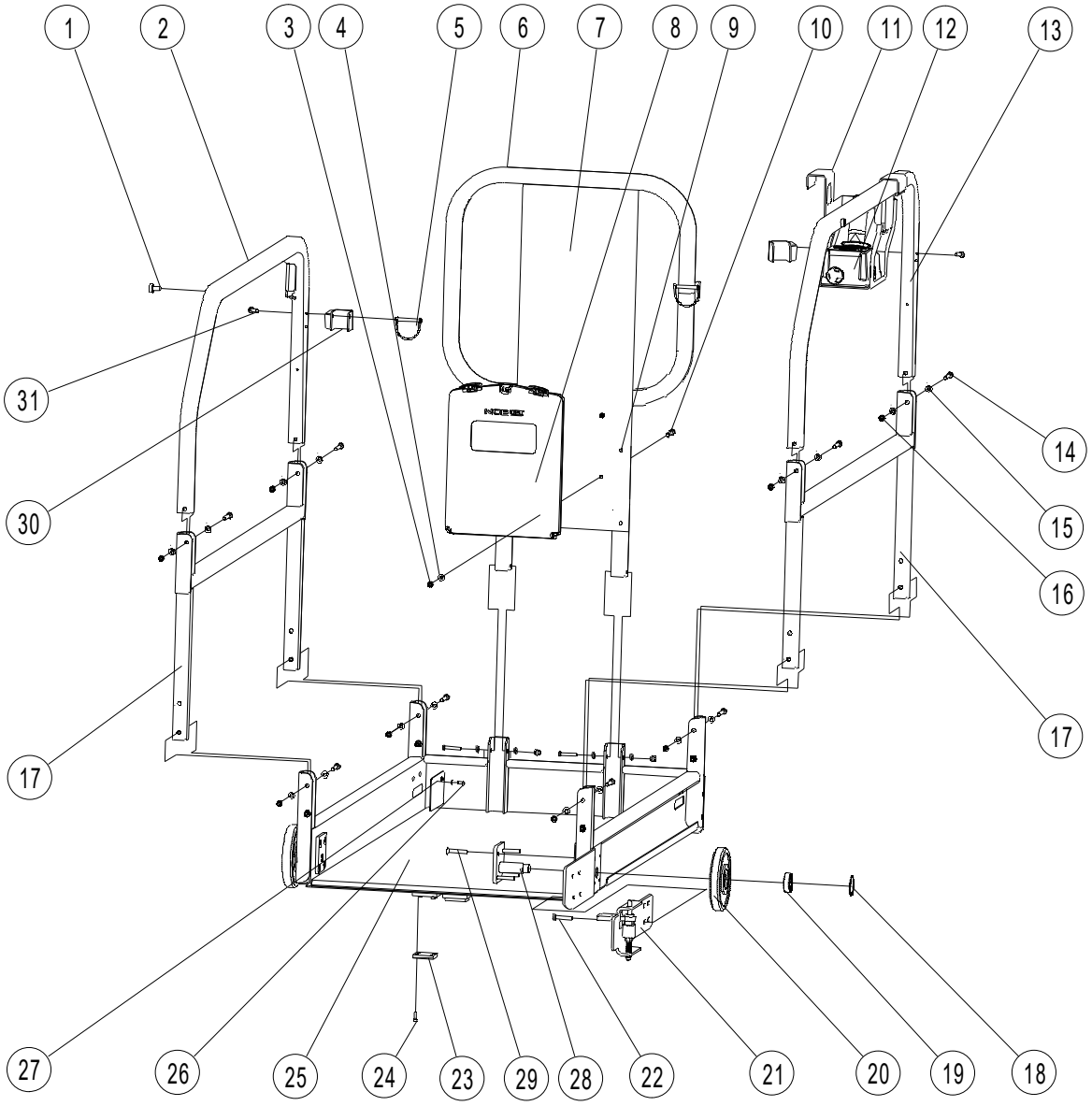

Table 12.2 Extended platform assembly

NO.	Art No.	Description	Qty.	Note
1	602019520021	Cushion pad	2	
2	600553510003	Rail	1	
3	910400100005	Washer	4	
4	910300500003	Nut	4	
5	602053501003	Steel wire sleeve	2	
6	600553510005	Rail	1	
7	600553520042	Hanging Plate	1	
8	610053520093	File box	1	
9	910500200003	Rivet	6	
10	910100300011	Bolt	4	
11	602011010000	Hanging Plate	1	
12	922100100004	Controller	1	Figure 15
13	600553510004	Rail	1	
14	910100100026	Bolt	14	
15	910400100006	Washer	28	
16	910300500004	Nut	14	
17	600553510006	Rail	2	
18	910401400013	Collar	2	
19	910700200019	Bearing	2	
20	602053520073	Roller	2	
21	600553501001	Pedal lock	1	Figure16.2
22	910200300024	Screw	4	
23	602053520066	Steeping	2	
24	910200200032	Screw	8	
25	600553510002	Platform	1	
26	910200300016	Screw	4	
27	602053520086	Plate	2	
28	602053510009	Mounting seat	2	
29	910200400031	Screw	8	
30	600553510012	Hanging buckle	2	
31	910200300034	Screw	4	

Figure 13.1 Main platform assembly(SC10H/SC12H/SC14H/SC10E/SC12E/SC14E)

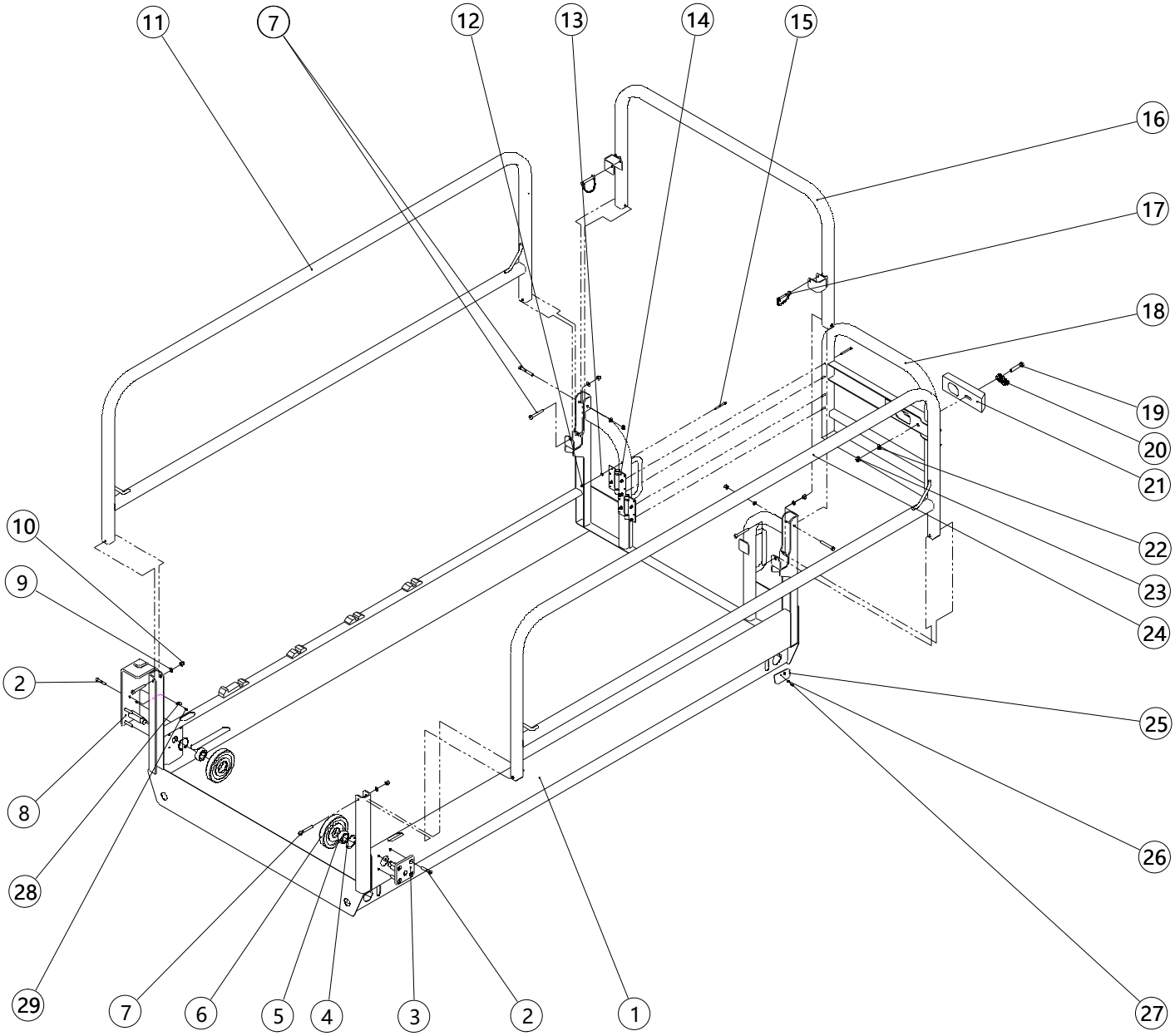

Table 13.1 Main platform assembly

NO.	Art No.	Description	Qty.	Note
1	602053510000	Main platform	1	
2	910200400031	Screw	8	
3	602053510009	Mounting seat	1	
4	910401400013	Collar	2	
5	910700200019	Bearing	2	
6	602053520072	Roller	2	
7	910100100026	Bolt	6	
8	602053510010	Mounting seat	1	
9	910400100006	Washer	12	
10	910300500004	Nut	6	
11	602053510002	Guardrail	1	
12	910300500002	Nut	8	
13	910400100004	Washer	8	
14	602053520090	Hinge 1	1	
	602053520091	Hinge 2	1	
15	910100100117	Bolt	8	
16	602053510003	Doorframe	1	
17	602053501003	Steel wire sleeve	2	
18	602053510004	Doorframe	1	
19	910100100025	Bolt	1	
20	602053520037	Spring	1	
21	602053520036	Door lock	1	
22	910400100006	Washer	1	
23	910300500004	Nut	1	
24	602053510001	Guardrail	1	
25	602053520085	Plate	2	
26	910400100005	Washer	10	
27	910200300016	Screw	4	
28	921300200001	Fixed parts	1	
29	910200500036	Screw	1	

Figure 13.2 Main platform assembly

(SC08HN/SC10HN/SC08EN/SC10EN)

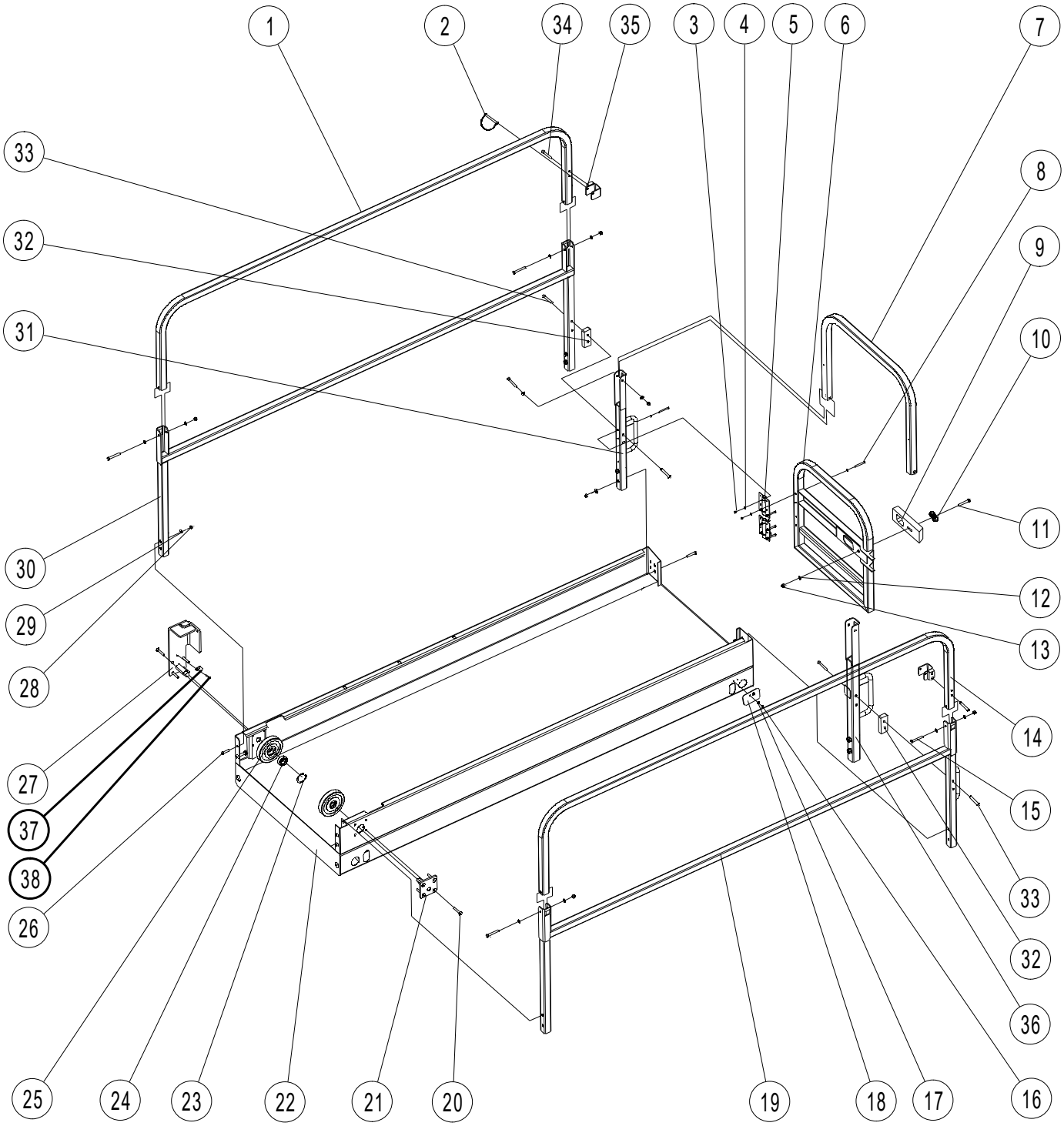

Table 13.2 Main platform assembly

NO.	Art No.	Description	Qty.	Note
1	600553520046	Guardrail	1	
2	602053501003	Steel wire sleeve	2	
3	910300500002	Nut	8	
4	910400100004	Washer	8	
5	602053520090	Hinge 1	1	
	602053520091	Hinge 2	1	
6	602053510004	Doorframe	1	
7	600553520043	Doorframe square pipe	1	
8	910100100117	Bolt	8	
9	602053520036	Door lock	1	
10	602053520037	Spring	1	
11	910100100025	Bolt	1	
12	910400100006	Washer	14	
13	910300500004	Nut	7	
14	600553520045	Guardrail	1	
15	910100100026	Bolt	6	
16	910200300016	Screw	4	
17	910400100005	Washer	10	
18	602053520085	plate	2	
19	600553510007	Guardrail	1	
20	910200400031	Screw	8	
21	602053510009	Mounting seat	1	
22	600553510001	Main platform	1	
23	910401400013	Collar	2	
24	910700200019	Bearing	2	
25	602053520072	Roller	2	
26	941100100002	Screw	12	

27	602053510010	Mounting seat	1	
28	910400100007	Washer	12	
29	910300300005	Nut	12	
30	600553510008	Guardrail	1	
31	600553510010	Doorframe column	1	
32	600553520044	Connection block	2	
33	910200300032	Screw	8	
34	910200300034	Screw	4	
35	600553510012	Hanging buckle	2	
36	600553510009	Doorframe column	1	
37	921300200001	Fixed parts	1	
38	910200500036	Screw	1	

Figure 14.1 Main control valve block(SC10H/SC12H/SC14H/SC08HN/SC10HN)

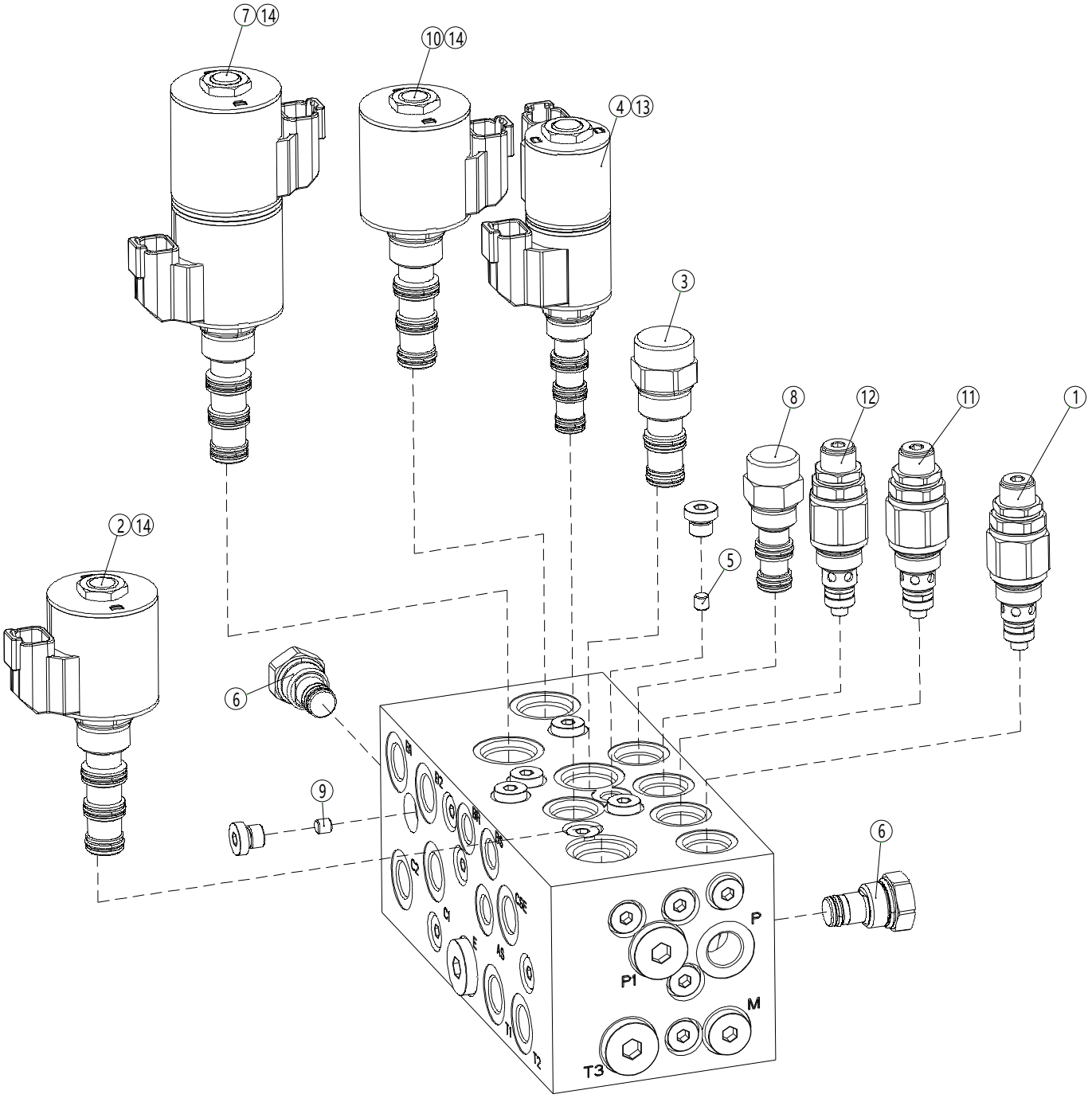

Table 14.1 Main control valve block

NO.	Art No.	Description	Qty.	Note
1	602098520005	Overflow valve	1	
2	602098520006	Solenoid valve	1	
3	602098520007	Priority valve	1	
4	602098520008	Solenoid valve	1	
5	602098520027	Damping	1	
6	602098520009	One-way valve	2	
7	602098520010	Solenoid valve	1	
8	602098520011	Compensating valve	1	
9	602098520012	Damping	1	
10	602098520013	Solenoid valve	1	
11	602098520014	Overflow valve	1	
12	602098520015	Overflow valve	1	
13	602098520016	Coil	2	
14	602098520017	Coil	4	

Figure 14.2 Main control valve block(SC10E/SC12E/SC14E/SC08EN/SC10EN)

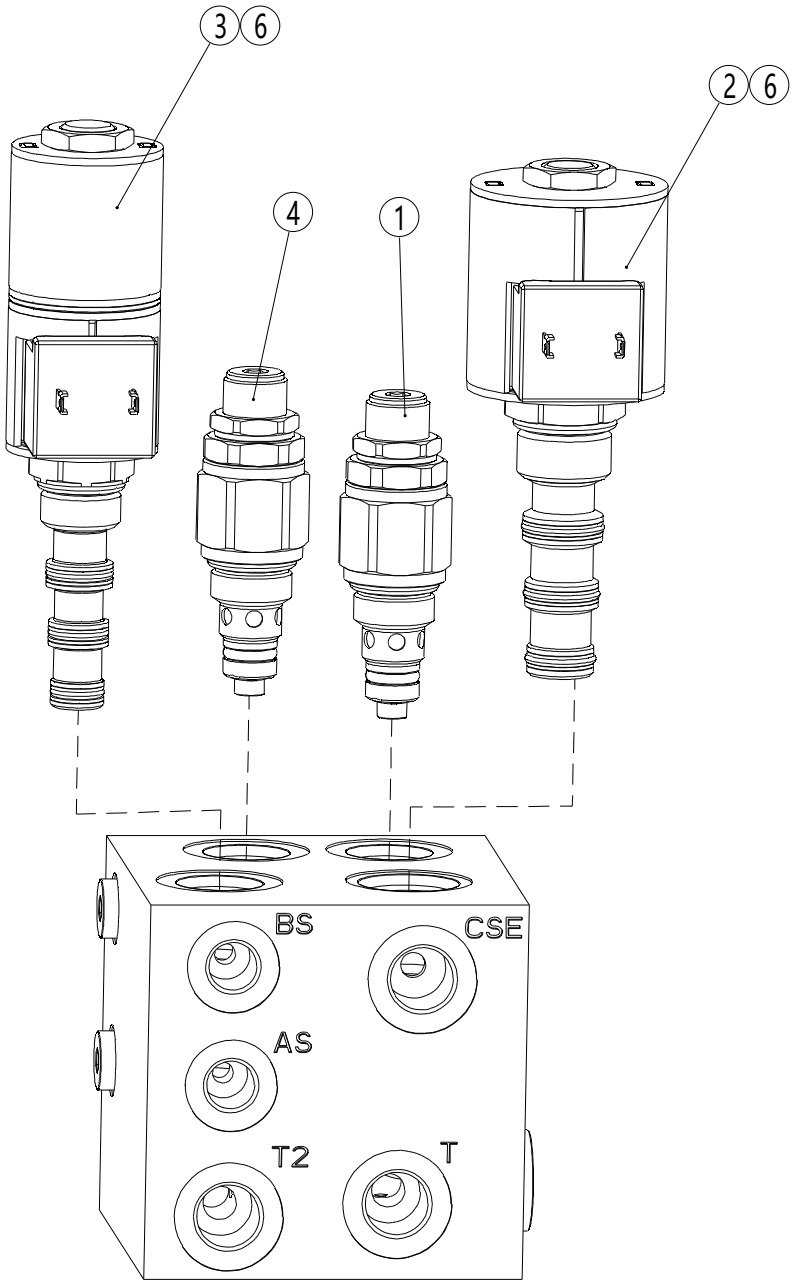

Table 14.2 Main control valve block

NO.	Art No.	Description	Qty.	Note
1	602098520005	Overflow valve	1	
2	602098520006	Solenoid valve	1	
3	602098520008	Solenoid valve	1	
4	602098520015	Overflow valve	1	
5	602098520018	Coil	2	
6	602098520019	Coil	1	

Figure 15 Platform controller components

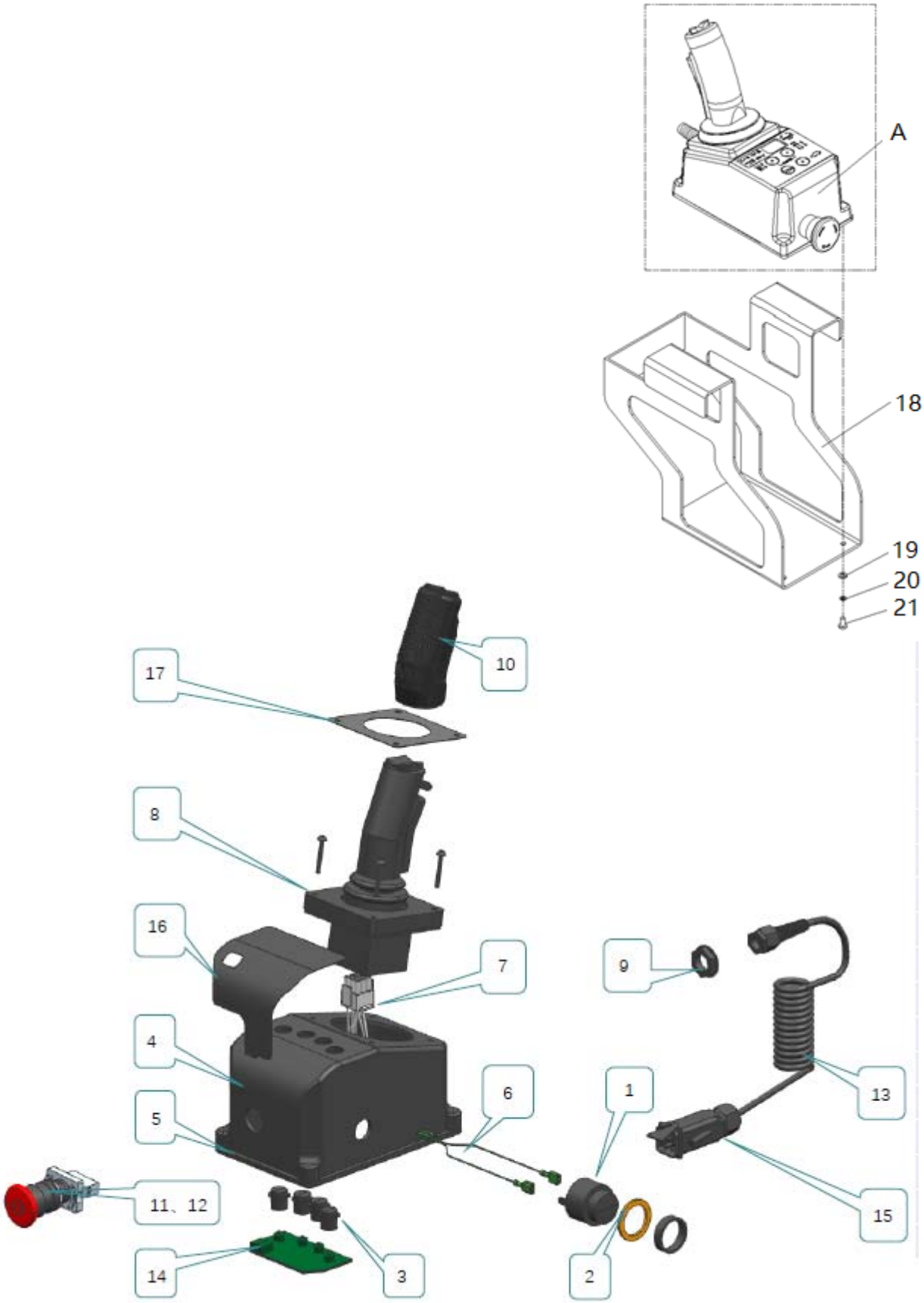

Table 15 Platform controller components

NO.	Art No.	Description	Qty.	Note
1	602098520035	Buzzer	1	
2	602098520068	Washer	1	
3	602098520037	Button	4	
4	602098520040	Controller box	1	
5	602098520041	Bottom cover	1	
6	602098520069	Harness	1	
7	602098520070	Harness	1	
8	602098520032	Control handle	1	
9	602098520071	Nut	1	
10	602098520067	Silicon rubber case	1	
11	602098520034	Emergency stop switch	1	
12	602098520038	Contact block	1	
13	602098520039	Spring line	1	
14	602098520036	Switch	1	
15	602098520072	Connector	1	
16	602098520033	Decal	1	
17	602098520073	Decal	1	
18	602011010000	Hanging plate	1	
19	910400100005	Washer	4	
20	910400500005	Spring washer	4	
21	910200500054	Screw	4	
A	922100100004	Platform controller	1	

Figure 16.1 Pedal lock(SC10H/SC12H/SC14H/SC10E/SC12E/SC14E)

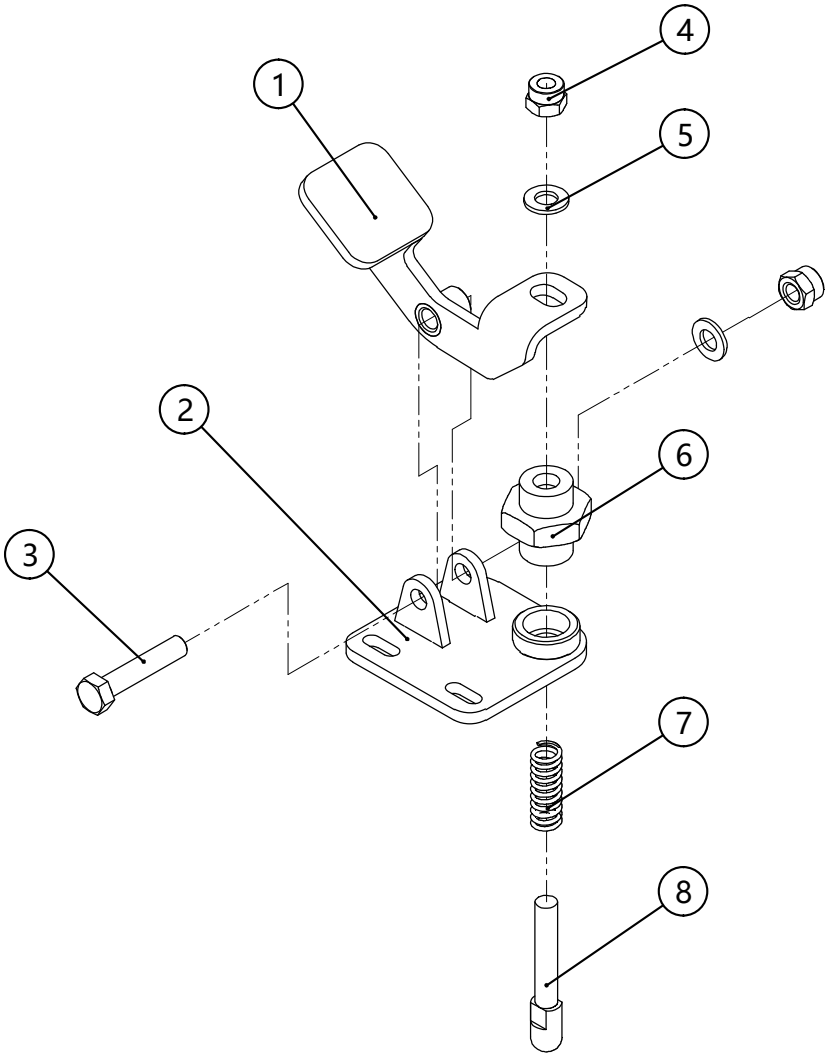

Table 16.1 Pedal lock

NO.	Art No.	Description	Qty.	Note
1	602053510012	Pedal	1	
2	602053510011	Support	1	
3	910200300034	Screw	1	
4	910300500005	Nut	2	
5	910400100007	Washer	2	
6	602053520080	Nut	1	
7	602053520078	Spring	1	
8	602053520079	Bolt	1	

Figure 16.2 Pedal lock (SC08HN/SC10HN/SC08EN/SC10EN)

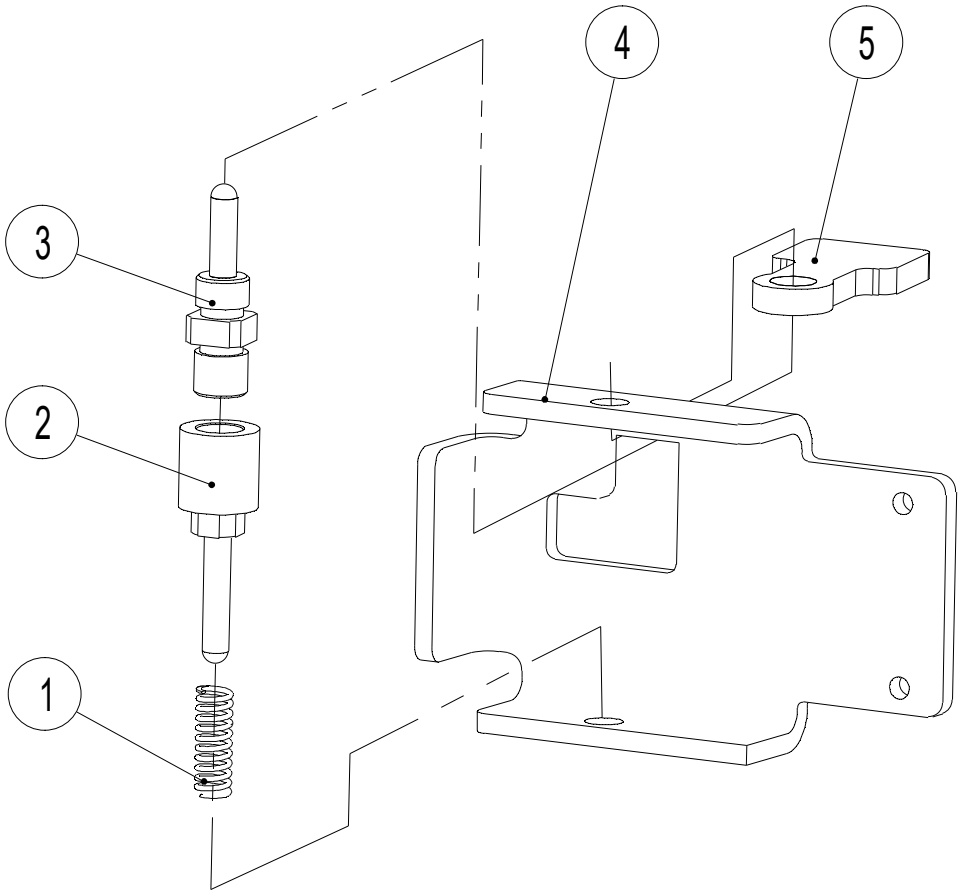

Table 16.2 Pedal lock

NO.	Art No.	Description	Qty.	Note
1	602053520078	Spring	1	
2	600553520040	Pin shaft	1	
3	600553520039	Pin shaft	1	
4	600553520037	Plate	1	
5	600553520038	Plate	1	

Figure 17.1 Wiring harness(SC10H/SC12H)

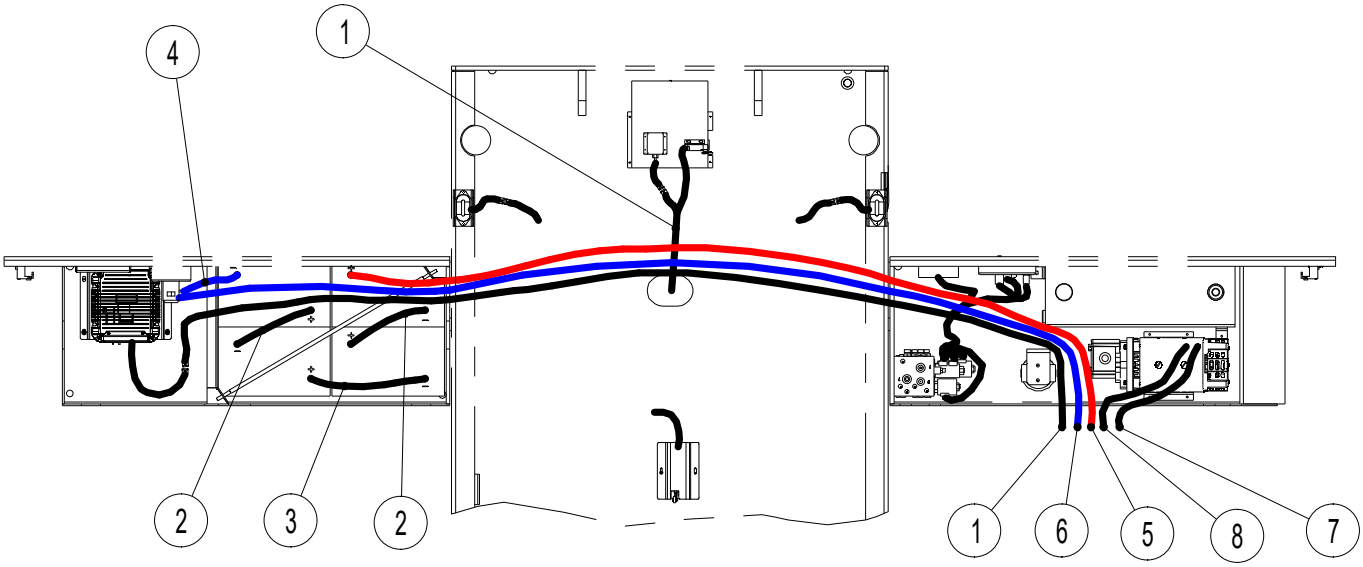

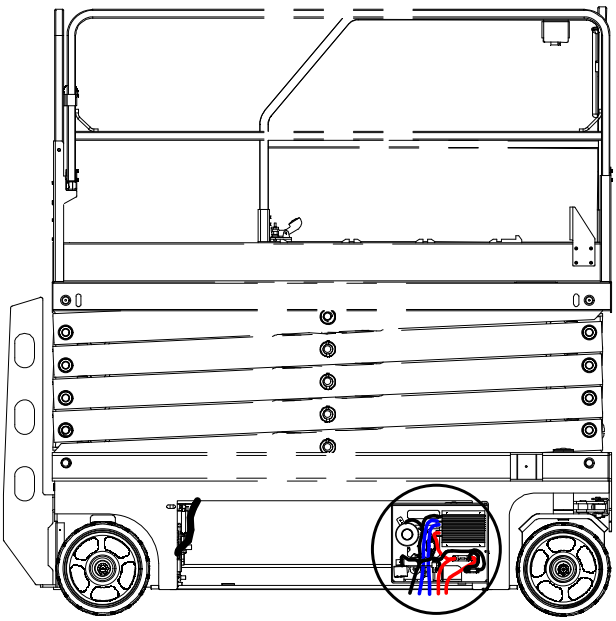

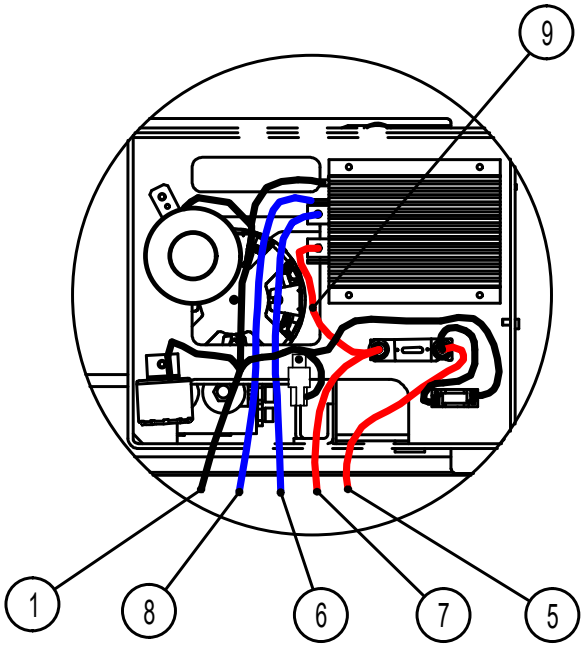

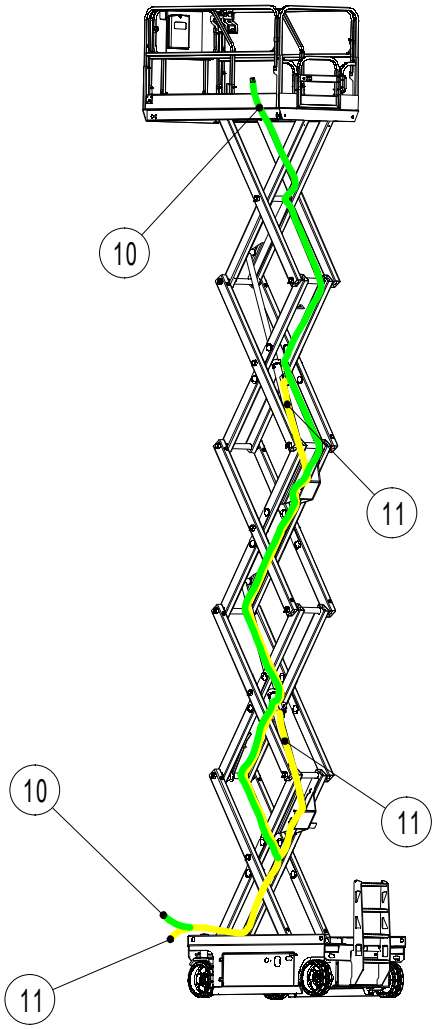
10
11
10
11
11

Table 17.1 Wiring harness(SC10H/SC12H)

NO.	Art No.	Description	Qty.	Note
1	602033010000	Wiring harness	1	
2	602033010009	Cable	2	
3	602033010010	Cable	1	
4	601033010004	Cable	1	
5	602033010005	Cable	1	
6	602033010004	Cable	1	
7	602033010007	Cable	1	
8	602033010008	Cable	1	
9	602033010006	Cable	1	
10	602033010001	Wiring harness	1	
11	602033010002	Wiring harness	1	

Figure 17.2 Wiring harness(SC14H)

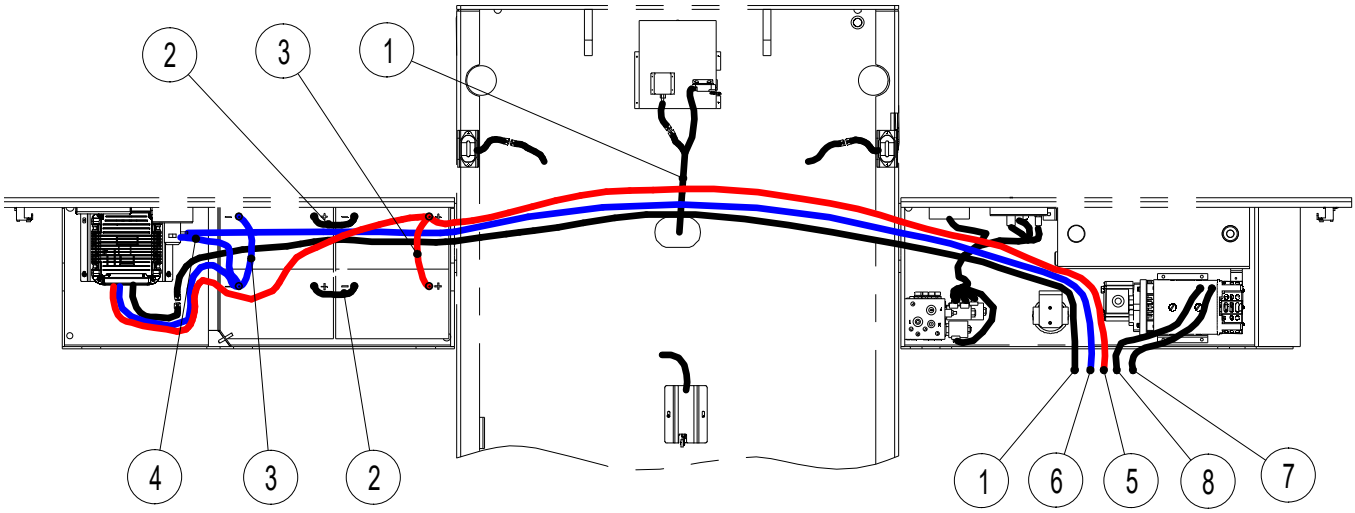

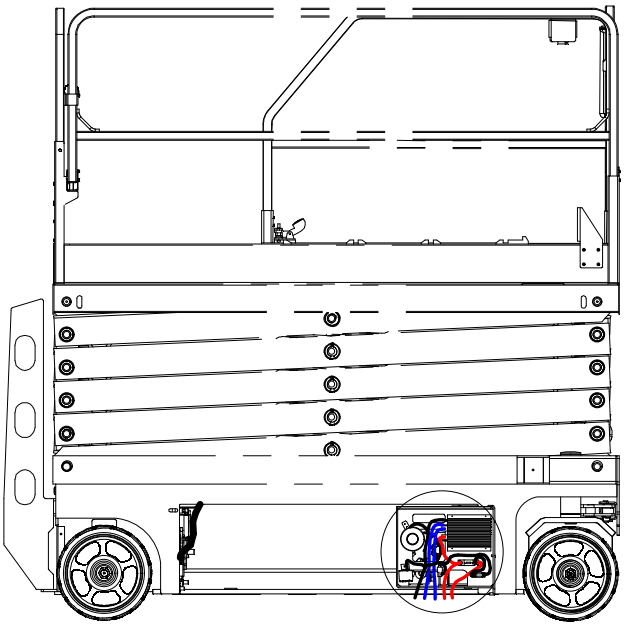

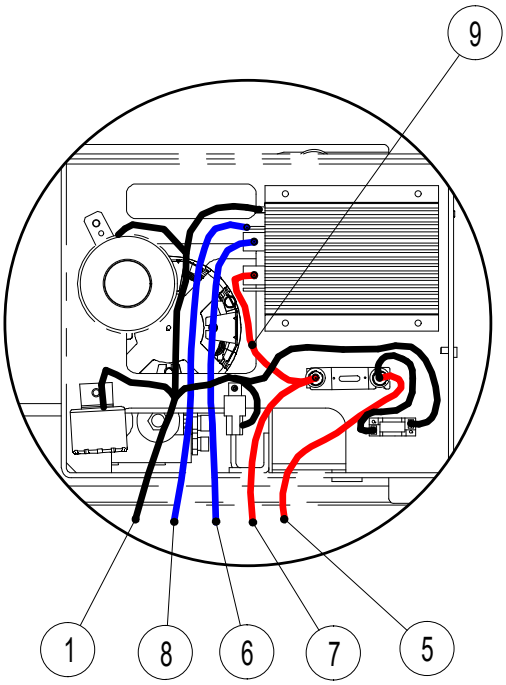

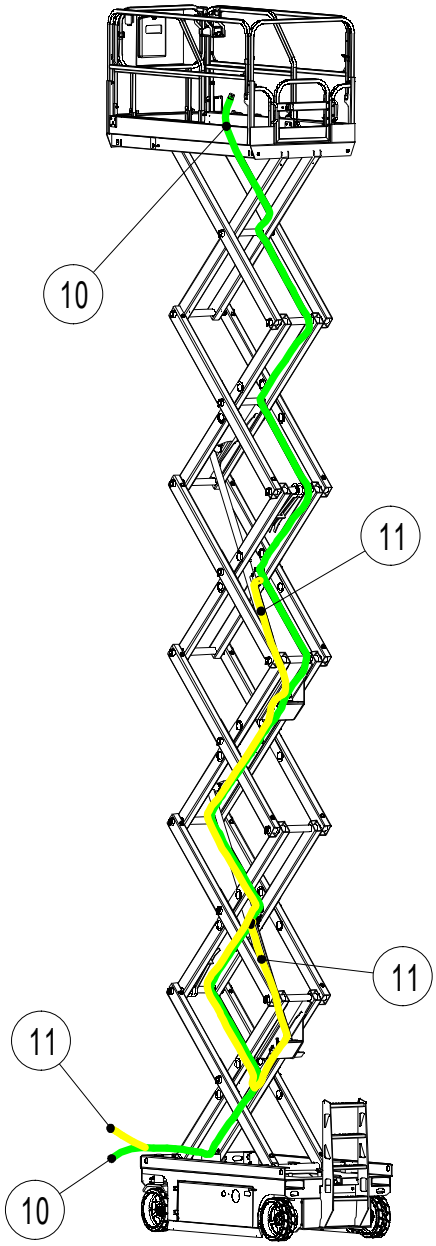
10
11
11
11
10

Table 17.2 Wiring harness(SC14H)

NO.	Art No.	Description	Qty.	Note
1	602033010000	Wiring harness	1	
2	602533010004	Cable	2	
3	602533010005	Cable	1	
4	602533010006	Cable	1	
5	602033010005	Cable	1	
6	602033010004	Cable	1	
7	602033010007	Cable	1	
8	602033010008	Cable	1	
9	602033010006	Cable	1	
10	602533010000	Wiring harness	1	
11	602033010002	Wiring harness	1	

Figure 17.3 Wiring harness(SC08HN/SC10HN)

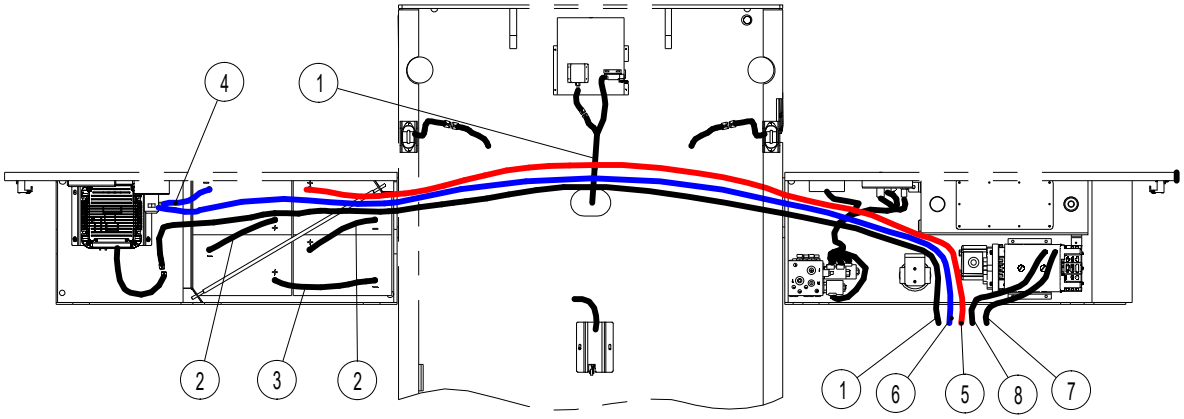

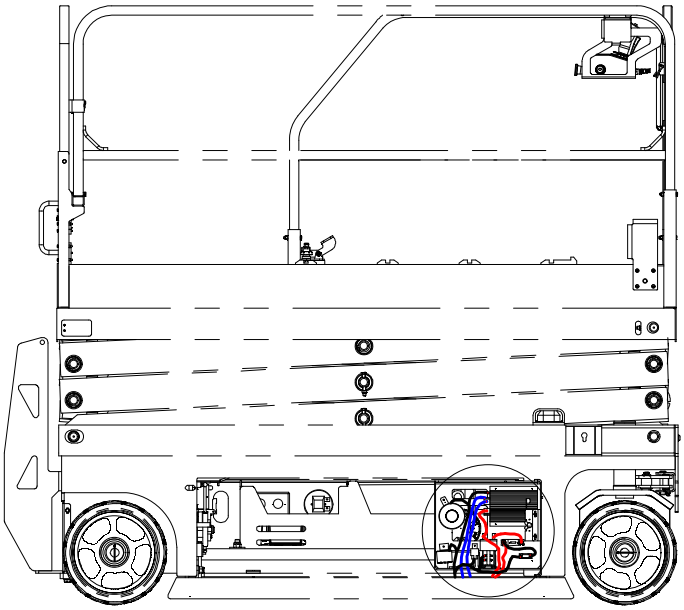

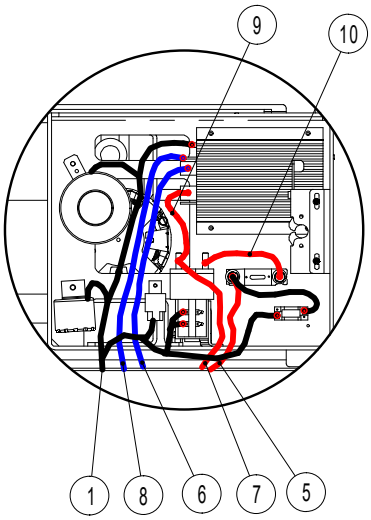

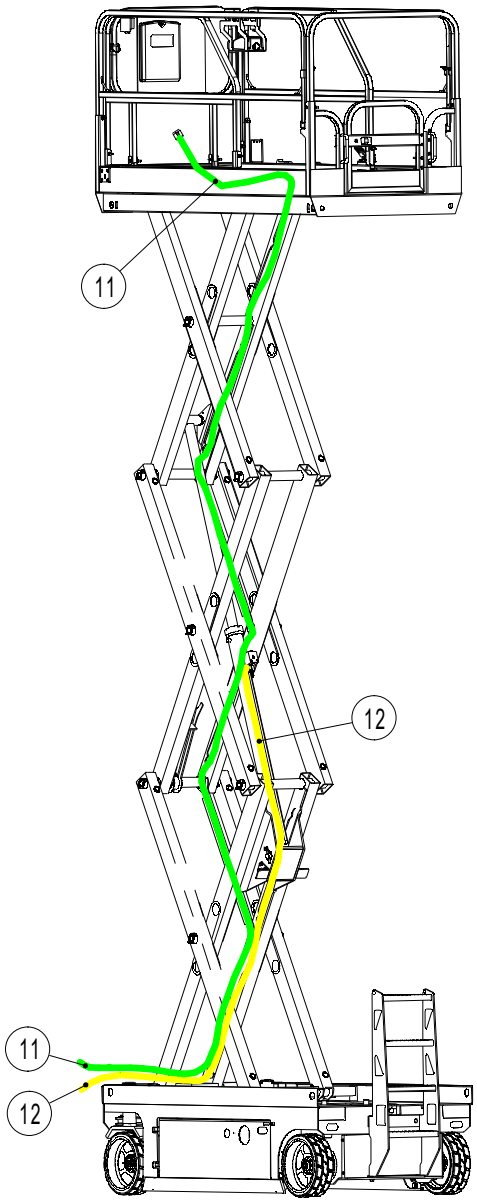
11
12
11
12

Table 17.3 Wiring harness(SC08HN/SC10HN)

NO.	Art No.	Description	Qty.	Note
1	602033010000	Wiring harness	1	
2	602033010009	Cable	2	
3	602033010010	Cable	1	
4	602033010003	Cable	1	
5	601033010001	Cable	1	
6	601033010000	Cable	1	
7	601033010002	Cable	1	
8	601033010003	Cable	1	
9	601033010008	Cable	1	
10	601033010007	Cable	1	
11	600533010000	Wiring harness	1	SC08HN
	601033010005			SC10HN
12	601033010006	Wiring harness	1	

Figure 18 Cylinder(SC12H/SC14H/SC12E/SC14E)

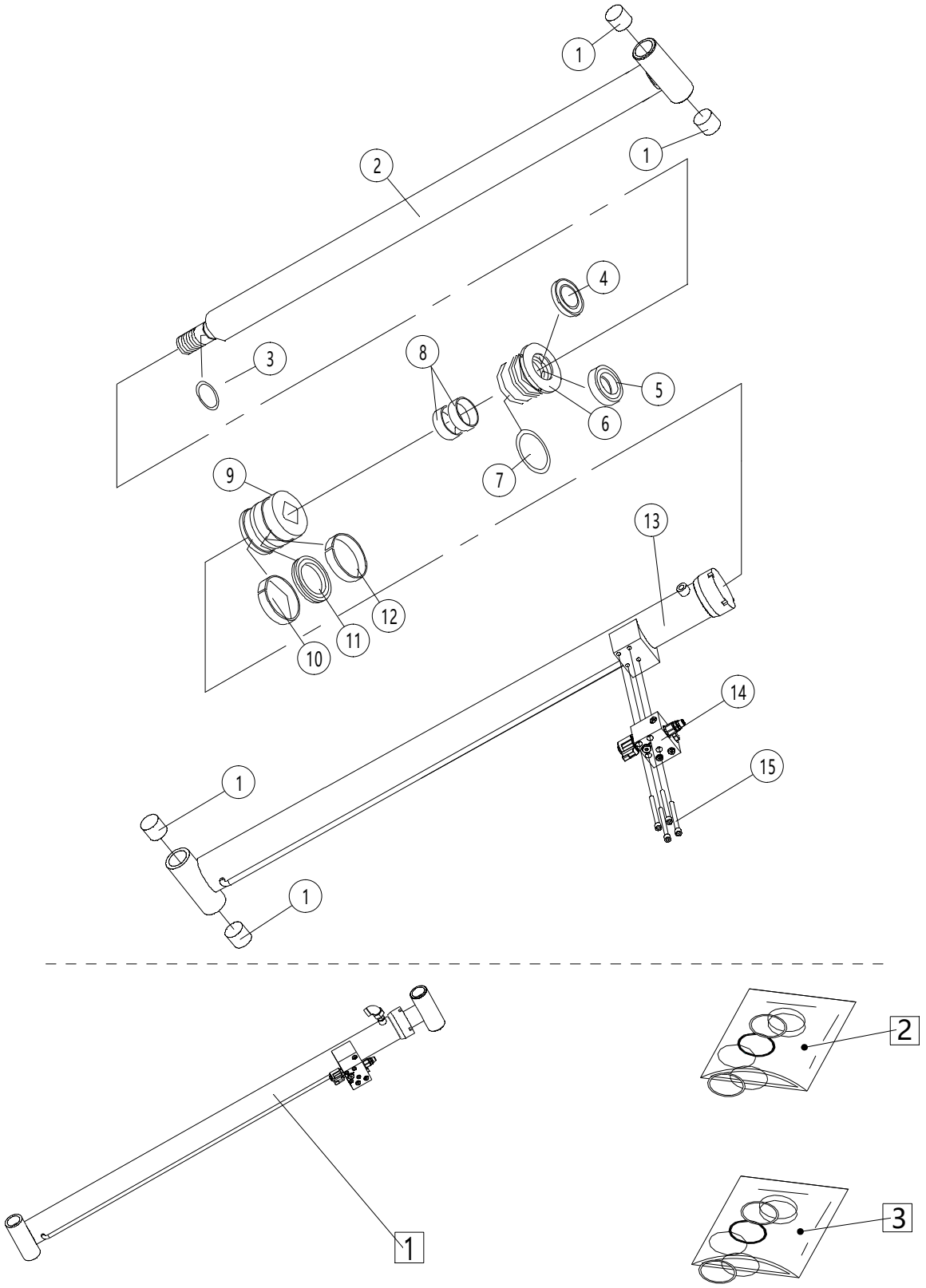

Table18 Cylinder

(SC12H/SC14H/SC12E/SC14E)

NO.	Art No.	Description	Qty.	Note
1	940500300001	Bearing	4	
2	Does not provide a separate sale	Piston rod	1	
3	Does not provide a separate sale	O ring	1	
4	Does not provide a separate sale	Dust ring	1	
5	Does not provide a separate sale	Shaft seal	1	
6	Does not provide a separate sale	Guide sleeve	1	
7	Does not provide a separate sale	O ring	1	
8	Does not provide a separate sale	Supporting ring	2	
9	Does not provide a separate sale	Piston	1	
10	Does not provide a separate sale	Supporting ring	1	
11	Does not provide a separate sale	Hole seal	1	
12	Does not provide a separate sale	Ring	1	
13	Does not provide a separate sale	Cylinder	1	
14	950600100026	Valve	1	Figure 24.1
15	910200200066	Screw	4	
1	602023501006	Cylinder assembly	1	
2	602098510002	Sealing bag	1	No：3,10,11,12
3	602098510003	Sealing bag	1	No：4,5,7,8

Figure 19 Cylinder

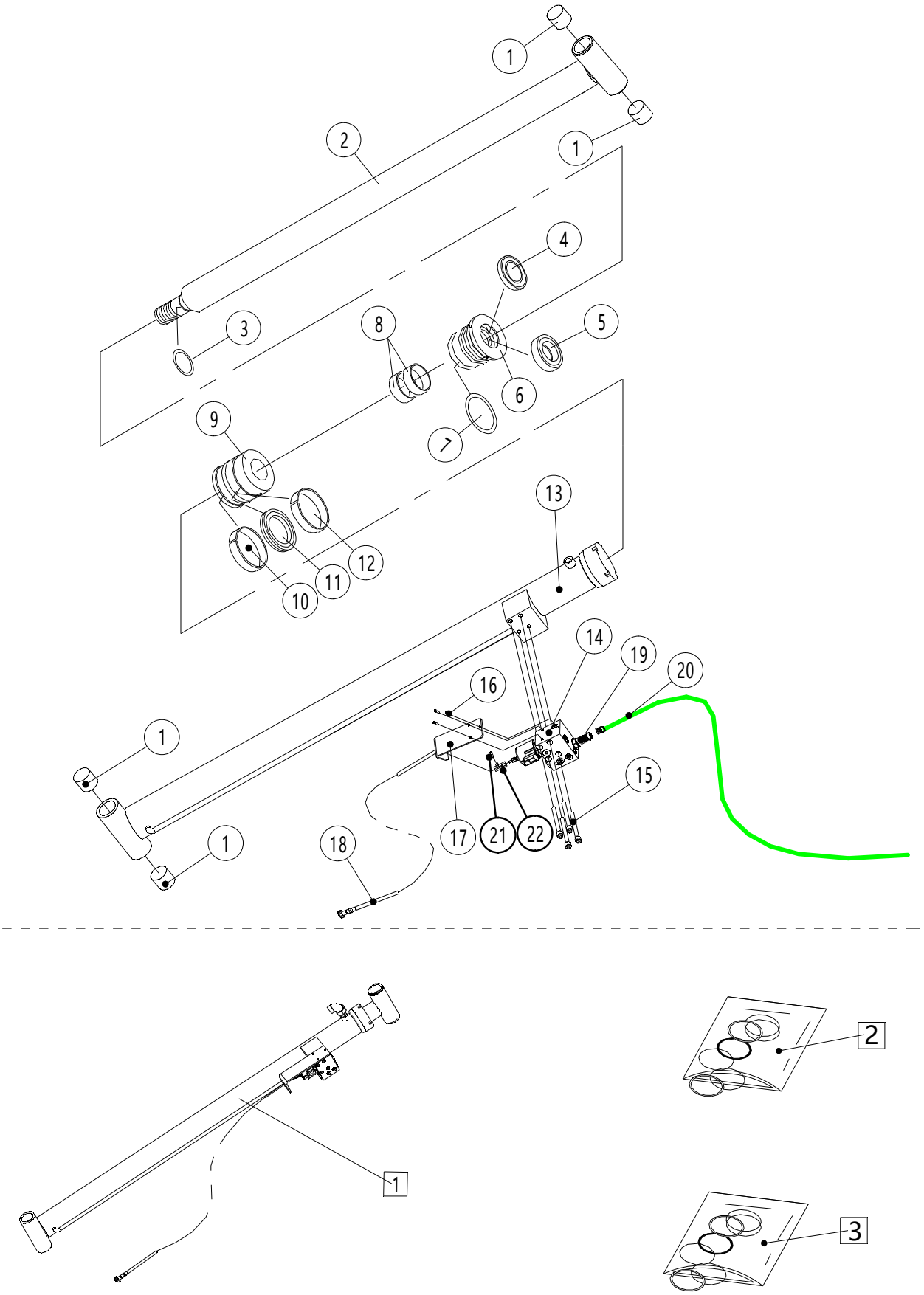

Table 19 Cylinder

NO.	Art No.	Description	Qty.	Note
1	940500300001	Bearing	4	
2	Does not provide a separate sale	Piston rod	1	
3	Does not provide a separate sale	O-ring	1	
4	Does not provide a separate sale	Dust ring	1	
5	Does not provide a separate sale	Shaft seal	1	
6	Does not provide a separate sale	Guide sleeve	1	
7	Does not provide a separate sale	O-ring	1	
8	Does not provide a separate sale	Supporting ring	2	
9	Does not provide a separate sale	Piston	1	
10	Does not provide a separate sale	Supporting ring	1	
11	Does not provide a separate sale	Hole seal	1	
12	Does not provide a separate sale	Ring	1	
13	Does not provide a separate sale	Cylinder	1	
14	950600100025	Valve	1	Figure 24.2
15	910200200066	Screw	4	
16	910200200035	Screw	3	
17	602023520002	Mounting plate	1	
18	602023501005	Drop in handle	1	
19	921800100003	Sensor	1	SC10H/SC12H/SC14H(Optional) SC10E/SC12E/SC14E(Optional)
	921800100015			SC08HN/SC08EN(Optional) SC10HN/SC10EN(Optional)
20	602066010002	Wiring harness	1	SC10H/SC12H/SC14H(Optional) SC10E/SC12E/SC14E(Optional)
	601066010002			SC08HN/SC08EN(Optional) SC10HN/SC10EN(Optional)
21	910200300011	Screw	1	
22	602023520007	Nut	1	
1	602023501007	Cylinder	1	
2	602098510004	Sealing bag	1	No：3,10,11,12
3	602098510005	Sealing bag	1	No：4,5,7,8

Figure 20.1 Hydraulic circuit diagram(SC10H)

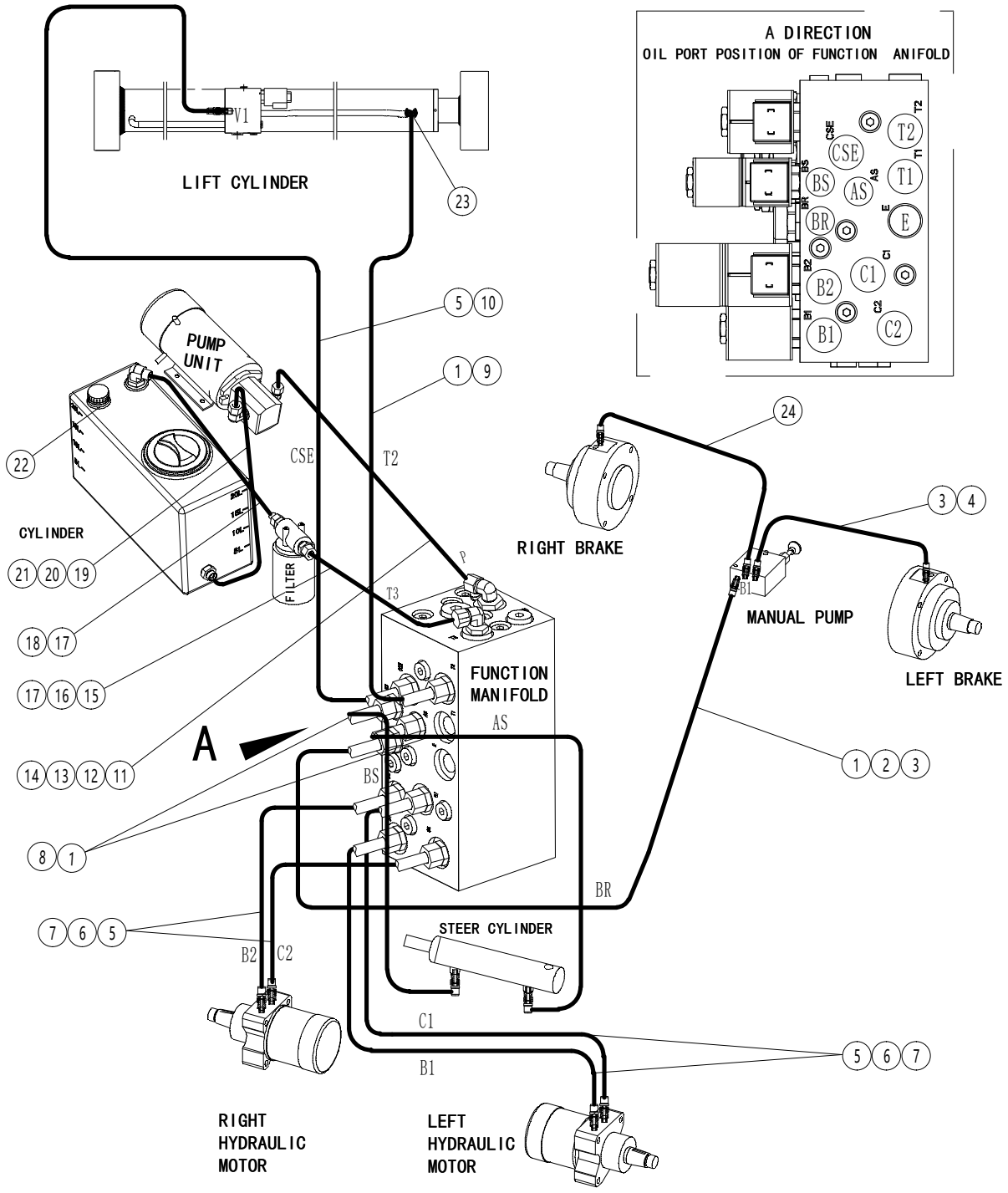

Table 20.1 Hydraulic circuit

NO.	Art No.	Description	Qty.	Note
1	950400300003	Joint	5	
2	452424010003	Hydraulic hose	1	
3	950400300013	Joint	5	
4	602023510012	Hydraulic hose	1	
5	950400300007	Joint	6	
6	602023510011	Hydraulic hose	4	
7	950400300014	Joint	4	
8	602023510009	Hydraulic hose	2	
9	601523510004	Hydraulic hose	1	
10	602023510004	Hydraulic hose	1	
11	950400300008	Joint	1	
12	602023510013	Hydraulic hose	1	
13	950401200004	Joint	1	
14	950400300009	Joint	1	
15	950400300012	Joint	1	
16	602023510014	Hydraulic hose	1	
17	950400300011	Joint	2	
18	602023510017	Hydraulic hose	1	
19	950401200005	Joint	1	
20	602023510015	Hydraulic hose	1	
21	950400300010	Joint	1	
22	950401200001	Joint	1	
23	950401300001	Joint	1	
24	602023510018	Hydraulic hose	1	

Figure 20.2 Hydraulic circuit diagram(SC12H/SC14H)

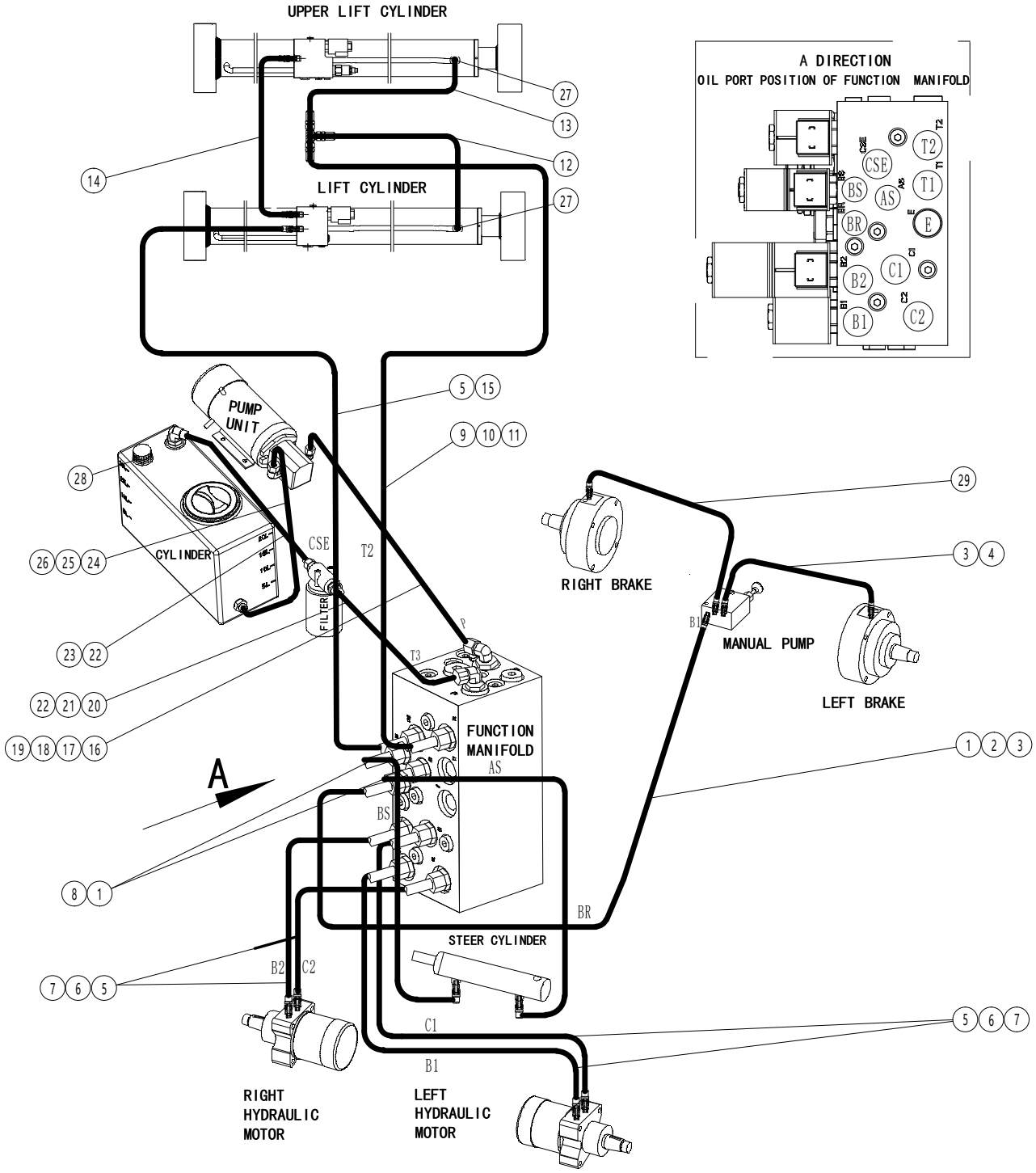

Table 20.2 Hydraulic circuit Figure

NO.	Art No.	Description	Qty.	Note
1	950400300003	Joint	5	
2	452424010003	Hydraulic hose	1	
3	950400300013	Joint	5	
4	602023510012	Hydraulic hose	1	
5	950400300007	Joint	8	
6	602023510011	Hydraulic hose	4	
7	950400300014	Joint	4	
8	602023510009	Hydraulic hose	2	
9	950400300004	Joint	1	
10	206044020030	Hydraulic hose	1	
11	950400700001	Joint	1	
12	206044520089	Hydraulic hose	1	
13	602023510016	Hydraulic hose	1	
14	602023510005	Hydraulic hose	1	
15	602023510004	Hydraulic hose	1	
16	950400300008	Joint	1	
17	602023510013	Hydraulic hose	1	
18	950401200004	Joint	1	
19	950400300009	Joint	1	
20	950400300012	Joint	1	
21	602023510014	Hydraulic hose	1	
22	950400300011	Joint	2	
23	602023510017	Hydraulic hose	1	
24	950401200005	Joint	2	
25	602023510015	Hydraulic hose	1	
26	950400300010	Joint	1	
27	950401300001	Joint	2	
28	950401200001	Joint	1	
29	602023510018	Hydraulic hose	1	

Figure 20.3 Hydraulic circuit diagram(SC10E)

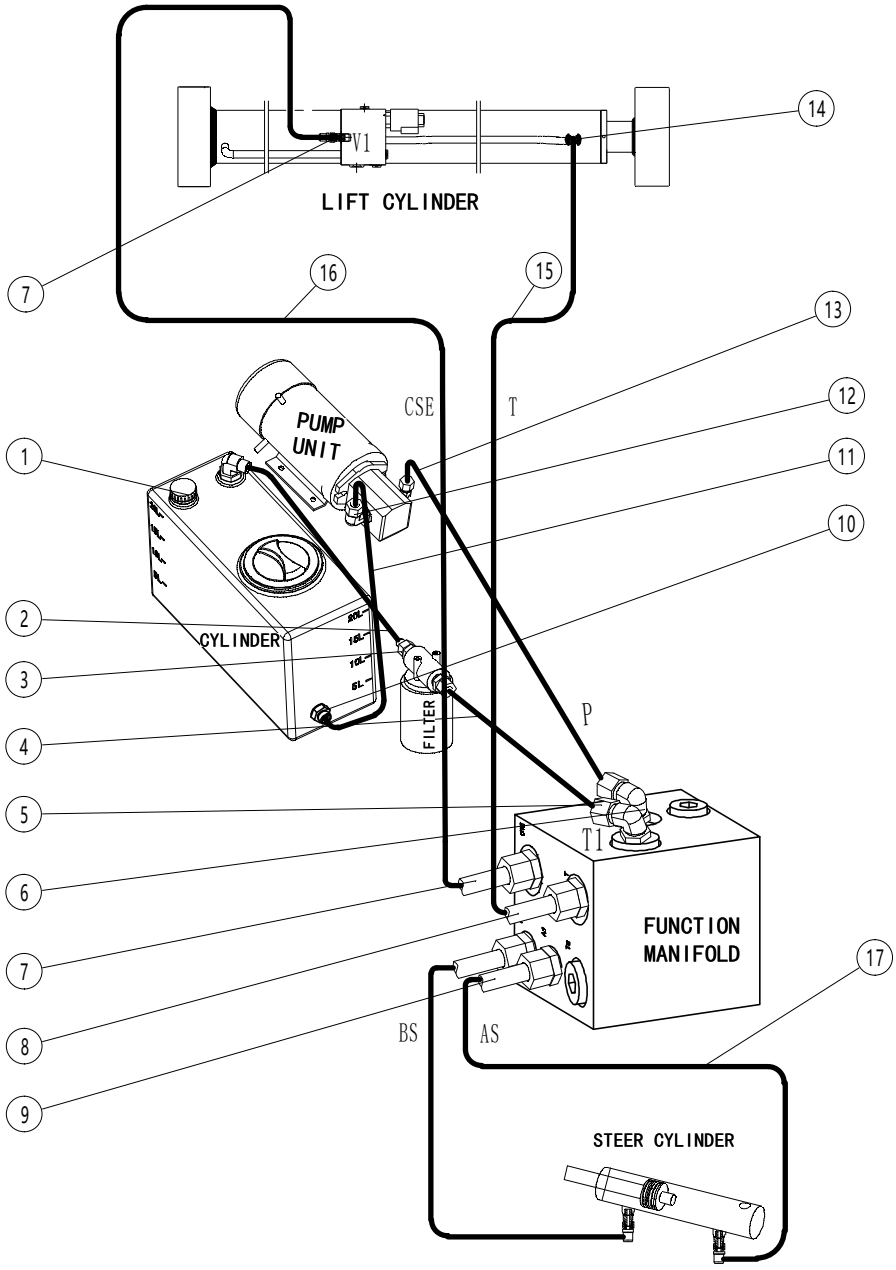

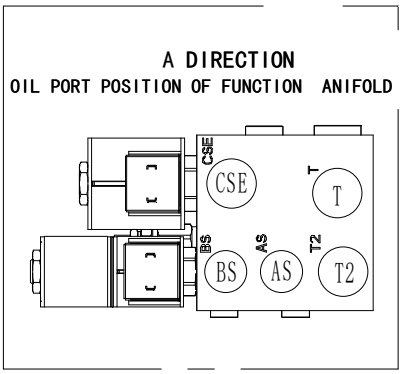

Table 20.3 Hydraulic circuit

NO.	Art No.	Description	Qty.	Note
1	950401200001	Joint	1	
2	602023510017	Hydraulic hose	1	
3	950400300011	Joint	2	
4	602023510014	Hydraulic hose	1	
5	950400300012	Joint	1	
6	950400300009	Joint	1	
7	950400300007	Joint	8	
8	950400300004	Joint	1	
9	950400300003	Joint	4	
10	950401200005	Joint	2	
11	602023510015	Hydraulic hose	1	
12	950400300010	Joint	1	
13	602023510013	Hydraulic hose	1	
14	950401300001	Joint	2	
15	601523510004	Hydraulic hose	1	
16	602023510004	Hydraulic hose	1	
17	602023510009	Hydraulic hose	2	

Figure 20.4 Hydraulic circuit diagram(SC12E/SC14E)

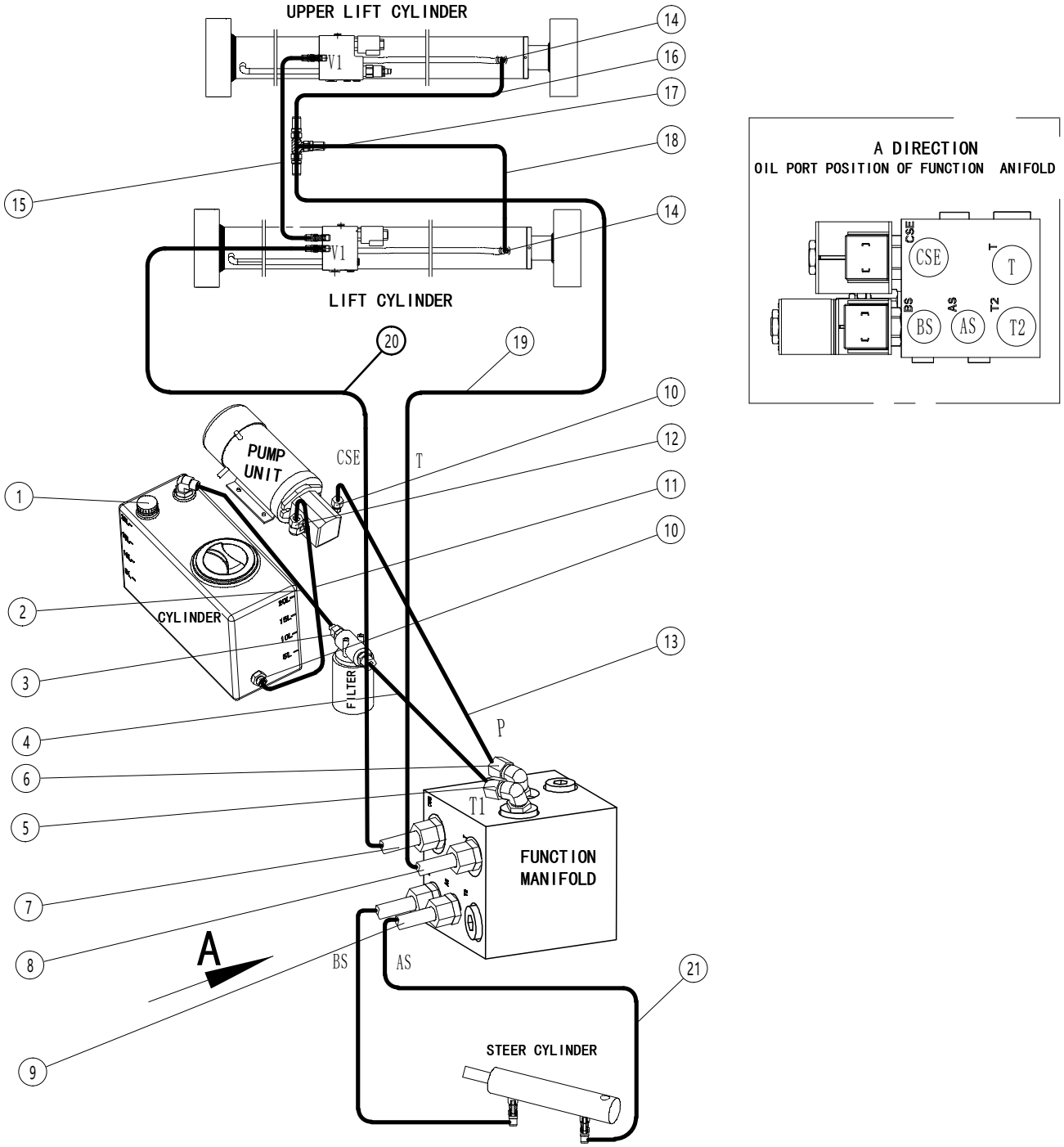

Table 20.4 Hydraulic circuit Figure

NO.	Art No.	Description	Qty.	Note
1	950401200001	Joint	1	
2	602023510017	Hydraulic hose	1	
3	950400300011	Joint	2	
4	602023510014	Hydraulic hose	1	
5	950400300012	Joint	1	
6	950400300009	Joint	1	
7	950400300007	Joint	8	
8	950400300004	Joint	1	
9	950400300003	Joint	4	
10	950401200005	Joint	2	
11	602023510015	Hydraulic hose	1	
12	950400300010	Joint	1	
13	602023510013	Hydraulic hose	1	
14	950401300001	Joint	2	
15	602023510005	Hydraulic hose	1	
16	602023510016	Hydraulic hose	1	
17	950400700001	Joint	1	
18	206044520089	Hydraulic hose	1	
19	206044020030	Hydraulic hose	1	
20	602023510004	Hydraulic hose	1	
21	602023510009	Hydraulic hose	2	

Figure 20.5 Hydraulic circuit diagram(SC08HN/SC10HN)

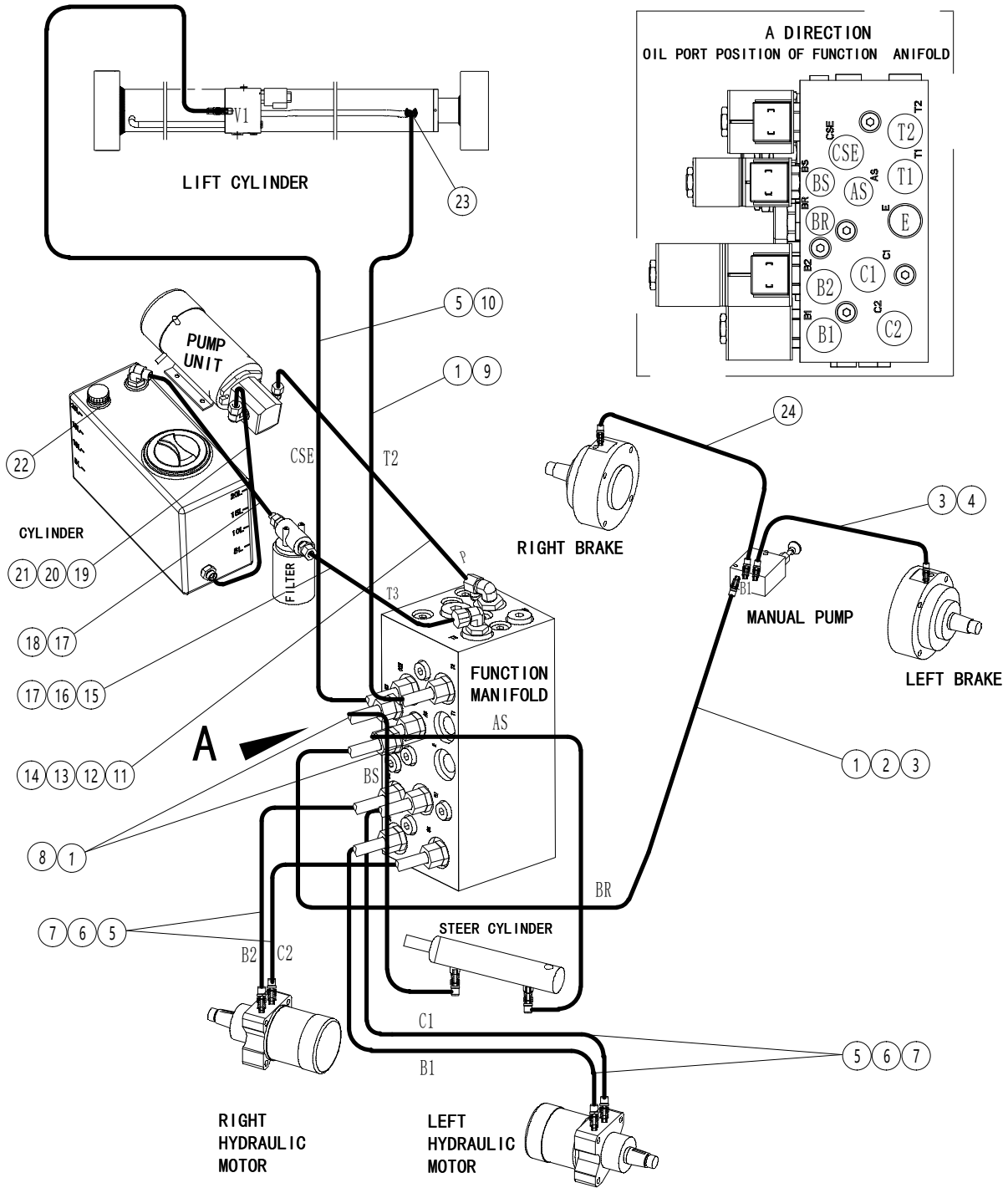

Table 20.5 Hydraulic circuit

NO.	Art No.	Description	Qty.	Note
1	950400300003	Joint	5	
2	452424010003	Hydraulic hose	1	
3	950400300013	Joint	5	
4	600523510001	Hydraulic hose	2	
5	950400300007	Joint	6	
6	600523510002	Hydraulic hose	4	
7	950400300014	Joint	4	
8	600523510003	Hydraulic hose	2	
9	601523510004	Hydraulic hose	1	
10	602023510004	Hydraulic hose	1	
11	950400300008	Joint	1	
12	602023510013	Hydraulic hose	1	
13	950401200004	Joint	1	
14	950400300009	Joint	1	
15	950400300012	Joint	1	
16	602023510014	Hydraulic hose	1	
17	950400300011	Joint	2	
18	602023510017	Hydraulic hose	1	
19	950401200005	Joint	1	
20	602023510015	Hydraulic hose	1	
21	950400300010	Joint	1	
22	950401200001	Joint	1	
23	950401300001	Joint	1	
24	950400200002	Joint	2	

Figure 20.6 Hydraulic circuit diagram(SC08EN/SC10EN)

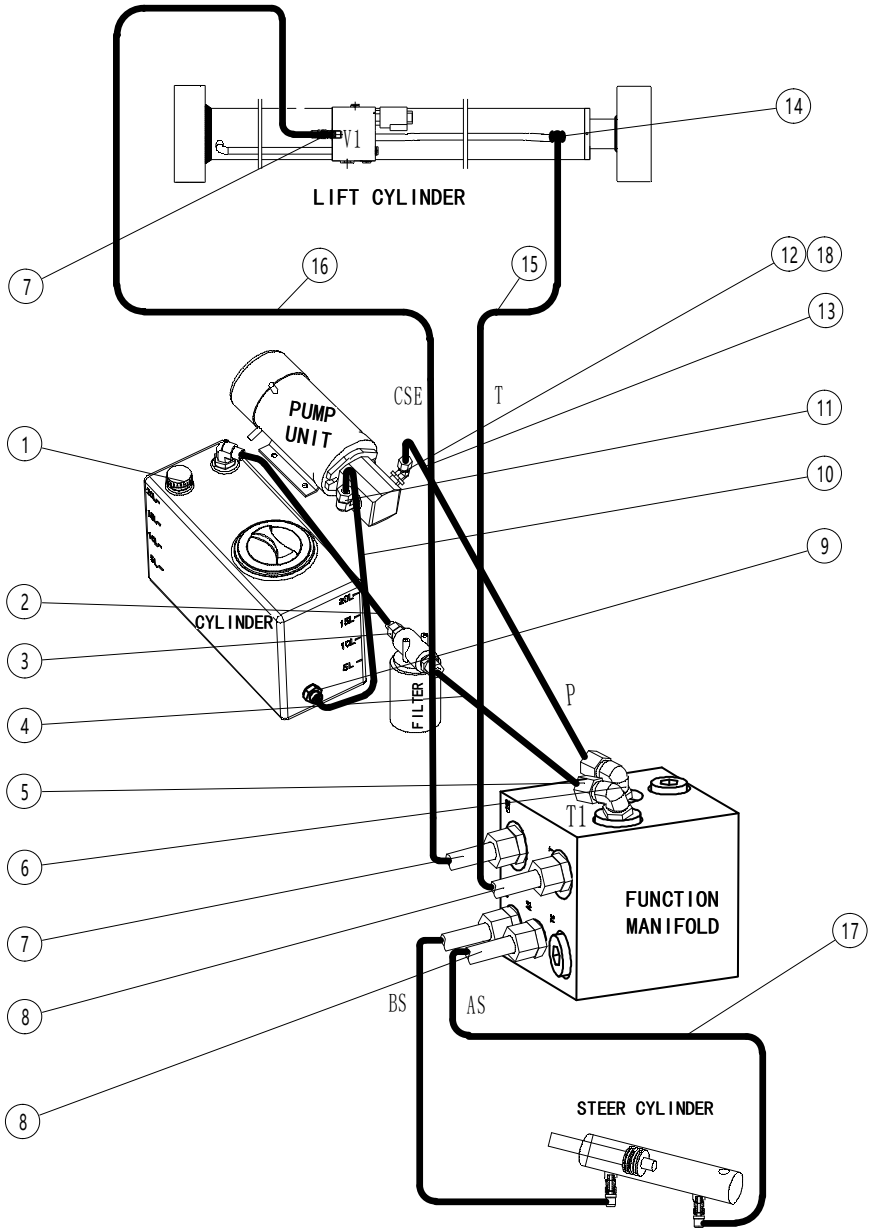

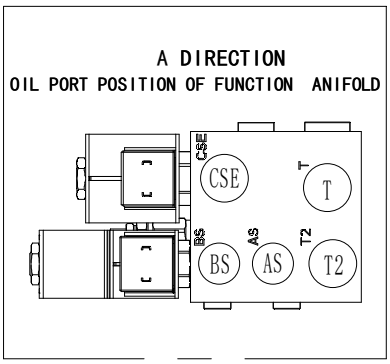

Table 20.6 Hydraulic circuit

NO.	Art No.	Description	Qty.	Note
1	950401200001	Joint	1	
2	602023510017	Hydraulic hose	1	
3	950400300011	Joint	2	
4	602023510014	Hydraulic hose	1	
5	950400300012	Joint	1	
6	950400300009	Joint	1	
7	950400300007	Joint	2	
8	950400300003	Joint	5	
9	950401200005	Joint	2	
10	602023510015	Hydraulic hose	1	
11	950400300010	Joint	1	
12	950400300008	Joint	1	
13	602023510013	Hydraulic hose	1	
14	950401300001	Joint	1	
15	601523510004	Hydraulic hose	1	
16	602023510004	Hydraulic hose	1	
17	600523510003	Hydraulic hose	2	
18	950401200004	Joint	1	

Figure 21 Steering Cylinder

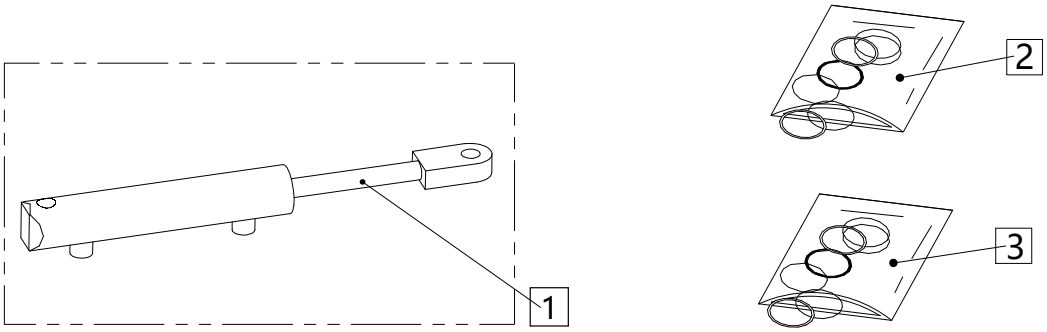

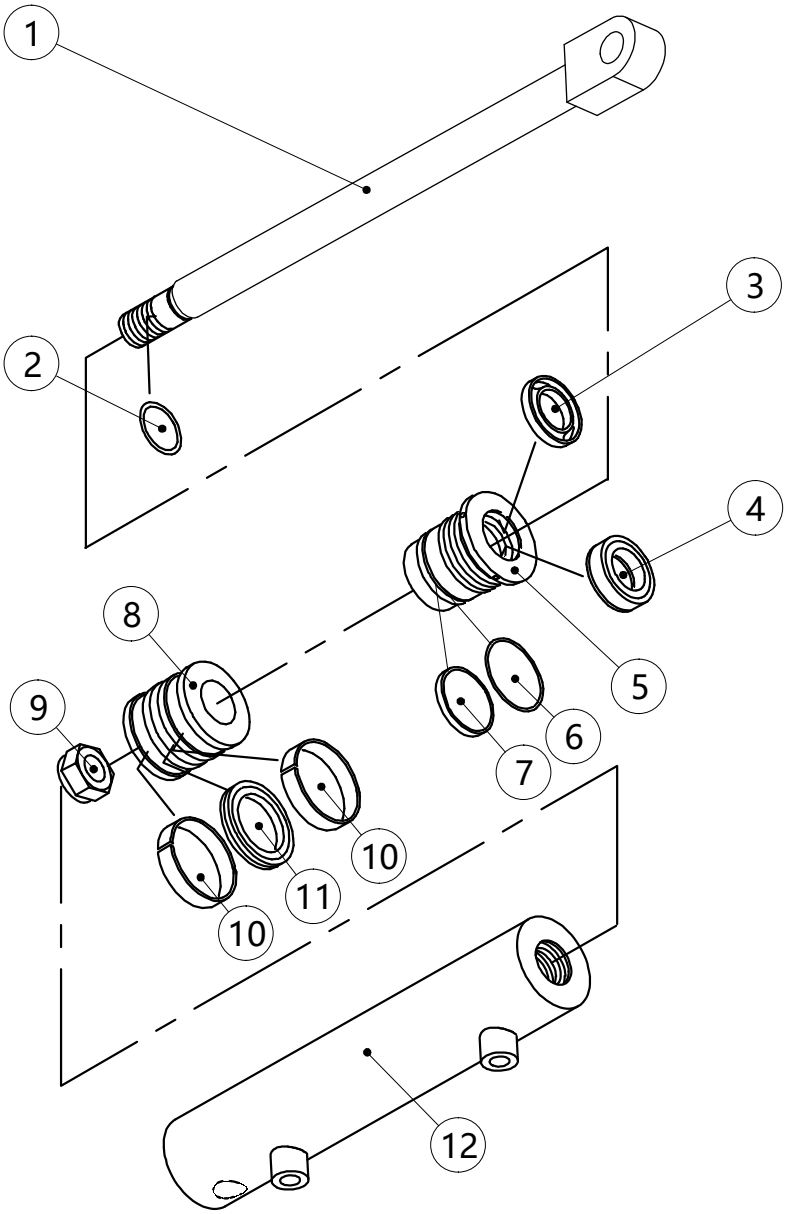

Table 21 Steering Cylinder

NO.	Art No.	Description	Qty.	Note
1	Does not provide a separate sale	Piston rod	1	
2	Does not provide a separate sale	O-sealing ring	1	
3	Does not provide a separate sale	Dust ring	1	
4	Does not provide a separate sale	Sealing ring	1	
5	Does not provide a separate sale	Cylinder screw cap	1	
6	Does not provide a separate sale	O-sealing ring	1	
7	Does not provide a separate sale	Collar	1	
8	Does not provide a separate sale	Piston	1	
9	Does not provide a separate sale	Nut	1	
10	Does not provide a separate sale	Supporting ring	2	
11	Does not provide a separate sale	Sealing ring	1	
12	Does not provide a separate sale	Cylinder body	1	
1	602015010000	Cylinder assembly	1	
2	602098510006	Sealing bag	1	No：2,10,11
3	602098510007	Sealing bag	1	No：3,4,6,7

Figure 22 Hydraulic oil tank

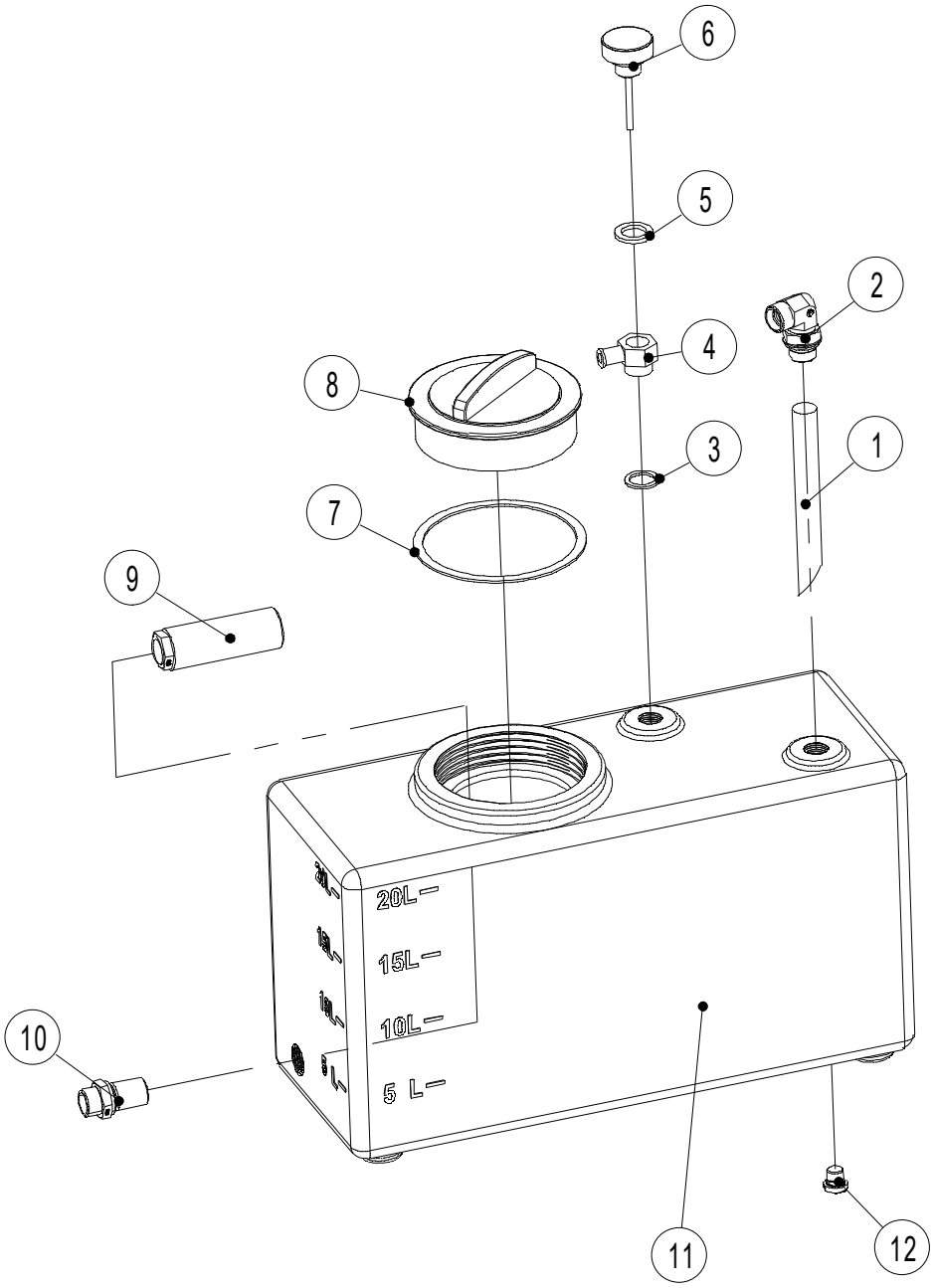

Table 22 Hydraulic oil tank

NO.	Art No.	Description	Qty.	Note
1	602098520051	Oil return pipe	1	
2	602098520022	Joint	1	
3	602098520052	Washer	1	
4	602098520053	Joint	1	
5	602098520054	Washer	1	
6	602098520020	Cover	1	
7	602098520055	Gasket	1	
8	602098520021	Oil tank cover	1	
9	602098520023	Oil filter	1	
10	602098520026	Joint	1	
11	602098520025	Oil tank	1	
12	602098520024	Plug	1	

Figure 23 Electrical installation assembly (SC10E/SC12E/SC14E/SC08EN/SC10EN)

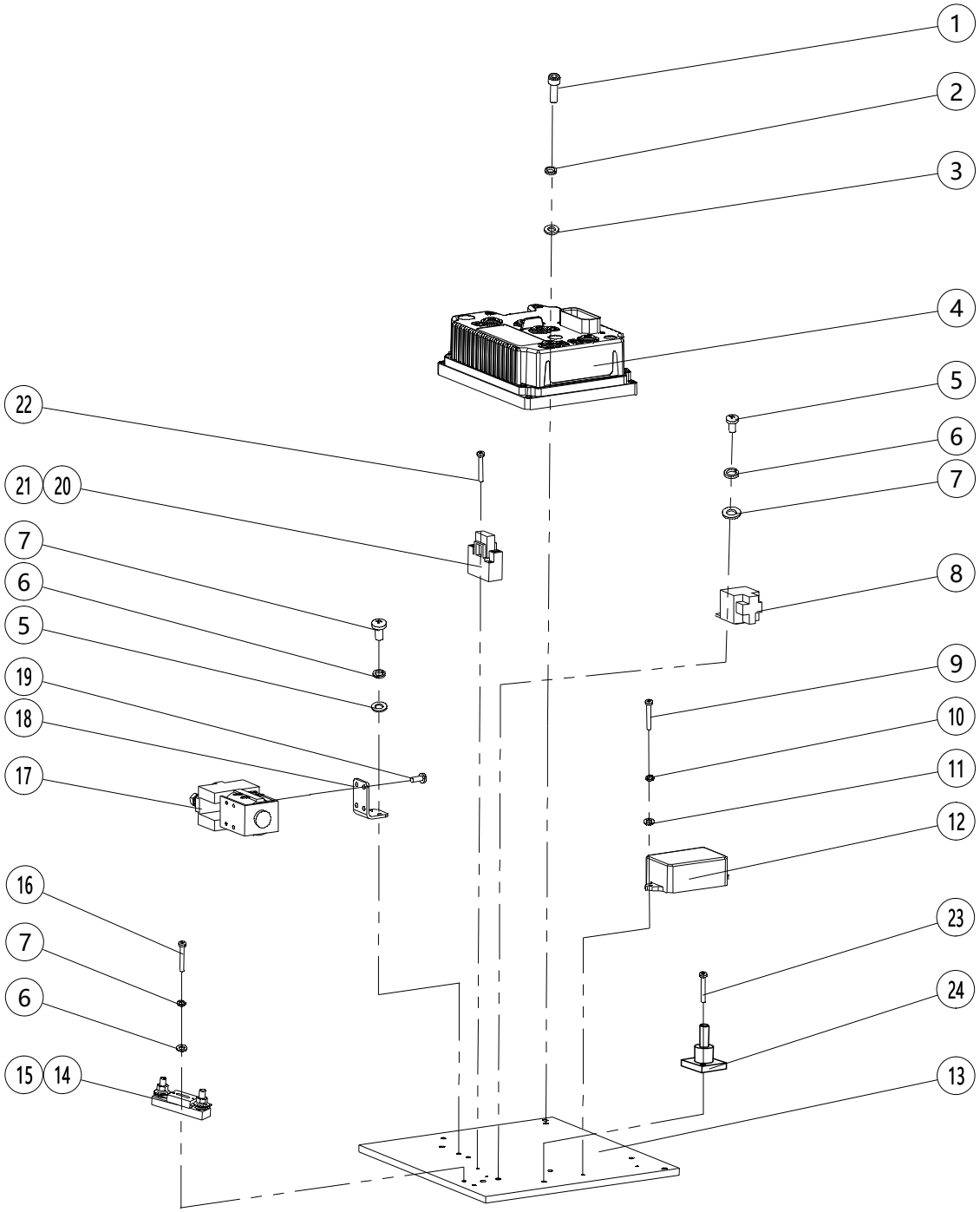

Table 23 Electrical installation assembly

NO.	Art No.	Description	Qty.	Note
1	910200200038	Screw	4	
2	910400500005	Spring washer	8	
3	910400100005	Washer	8	
4	921400100050	Controller	1	
5	910200500038	Screw	4	
6	910400100004	Washer	5	
7	910400500004	Spring washer	5	
8	920800100001	Relay	1	
9	910200500021	Screw	2	
10	910400500003	Spring washer	2	
11	910400100003	Washer	2	
12	602098520029	Protection box	1	
13	604533020000	Aluminum plate	1	
14	920100100011	Fuse	1	
15	920100400002	Fuse holder	1	
16	910200500040	Screw	2	
17	920700100002	Contactor	1	
18	921300400005	Fixed part	1	SC10E/SC12E/SC14E
	921300400008			SC08HN/SC08EN SC10HN/SC10EN
19	910200500035	Screw	4	
20	920100400006	Fuse holder	1	
21	920100200002	Fuse	1	
22	910200500017	Screw	2	
23	910200500024	Screw	2	
24	920100400001	Fuse holder	1	

Figure 24.1 Valve group（SC12H/SC14H/SC12E/SC14E）

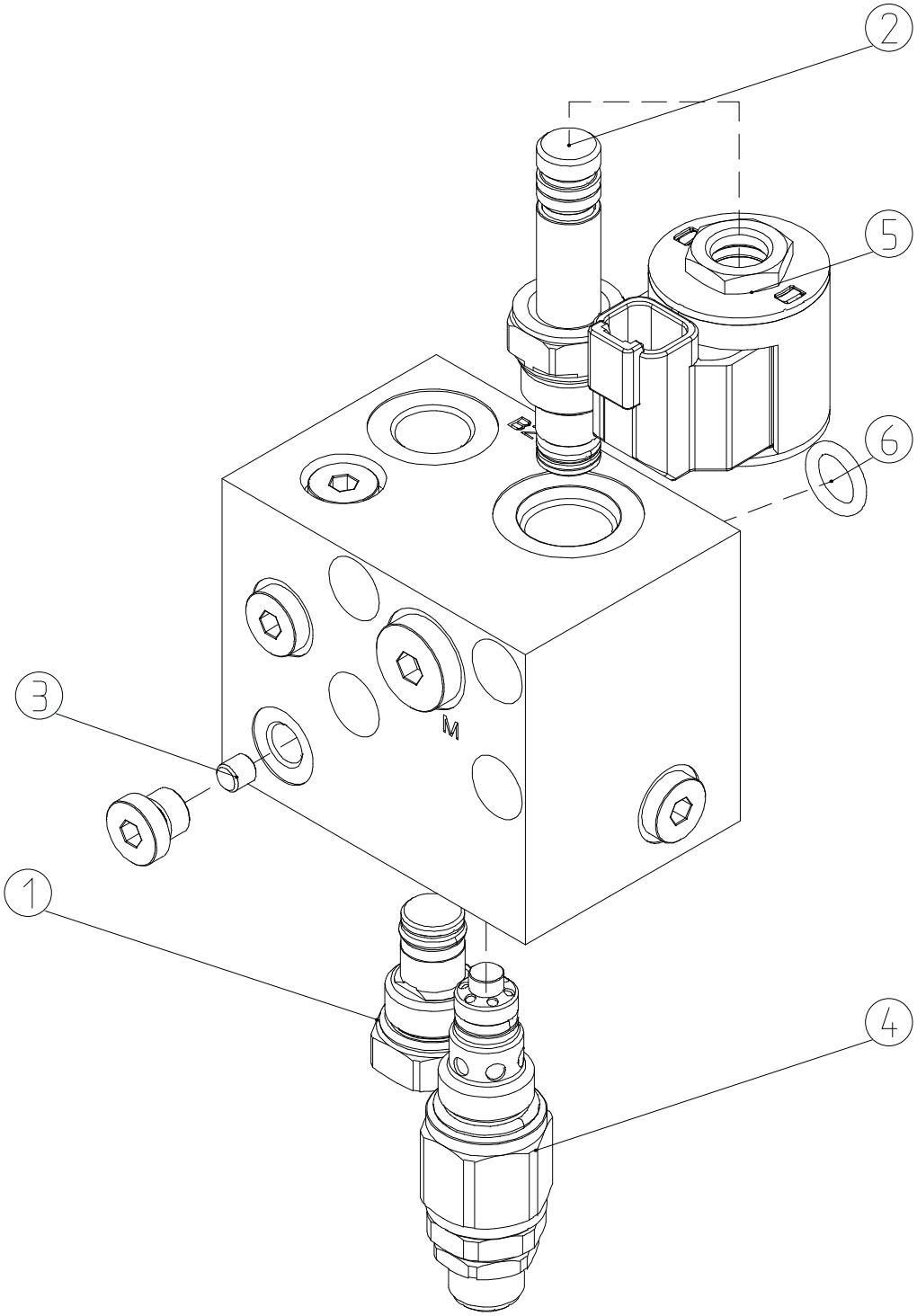

Table 24.1 Valve group

NO.	Art No.	Description	Qty.	Note
1	602098520042	One-way valve	1	
2	602098520043	Solenoid valve	1	
3	602098520044	Damping	1	
4	602098520045	Overflow valve	1	
5	602098520046	Coil	1	
6	602098520047	O-rings	1	

Figure 24.2 Valve group

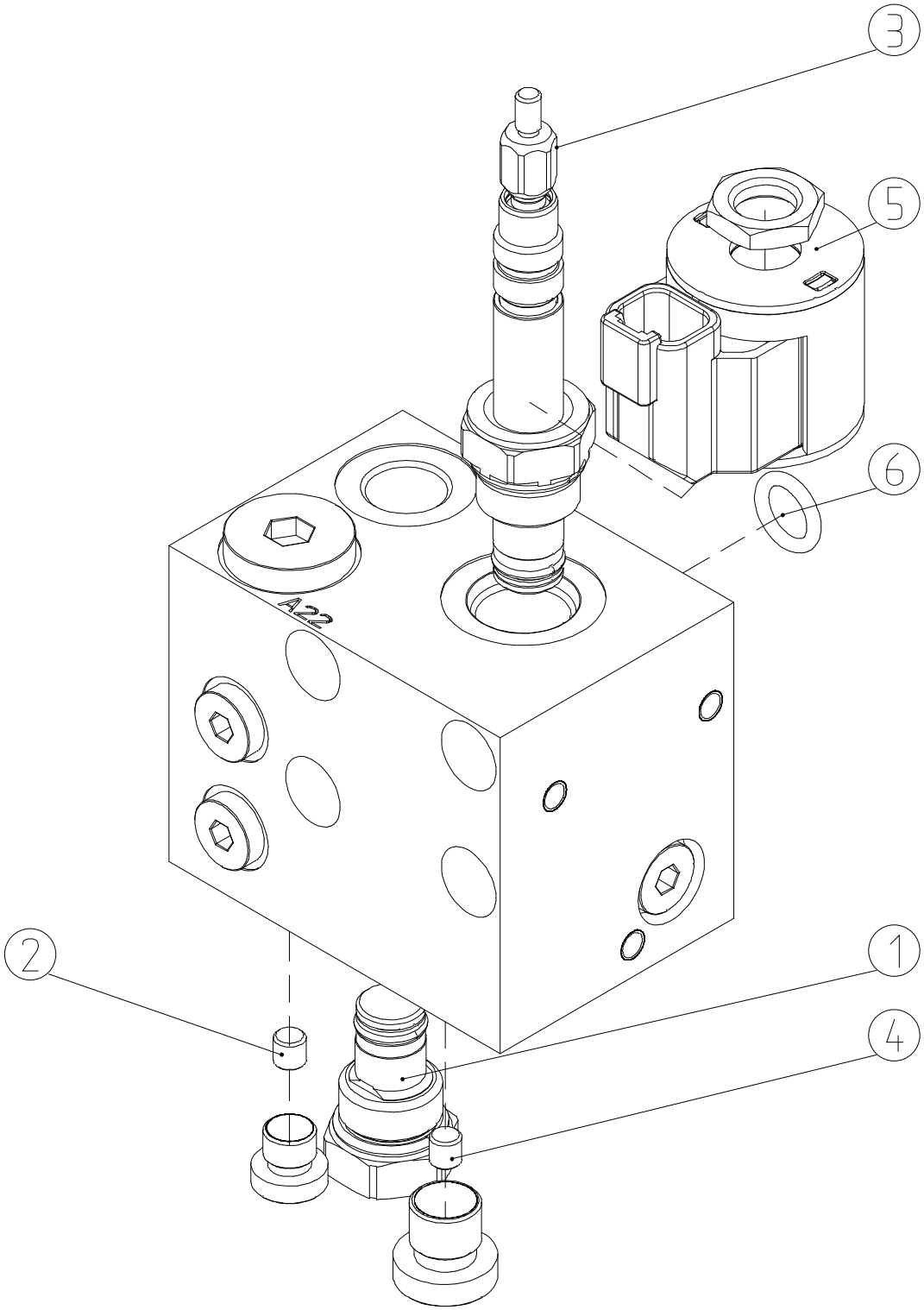

Table 24.2 Valve group

NO.	Art No.	Description	Qty.	Note
1	602098520042	One-way valve	1	
2	602098520044	Damping	1	
3	602098520048	Solenoid valve	1	
4	602098520049	Damping	1	
5	602098520046	Coil	1	
6	602098520050	O-rings	1	

Figure 25 Parts of collision protection mechanism(optional)

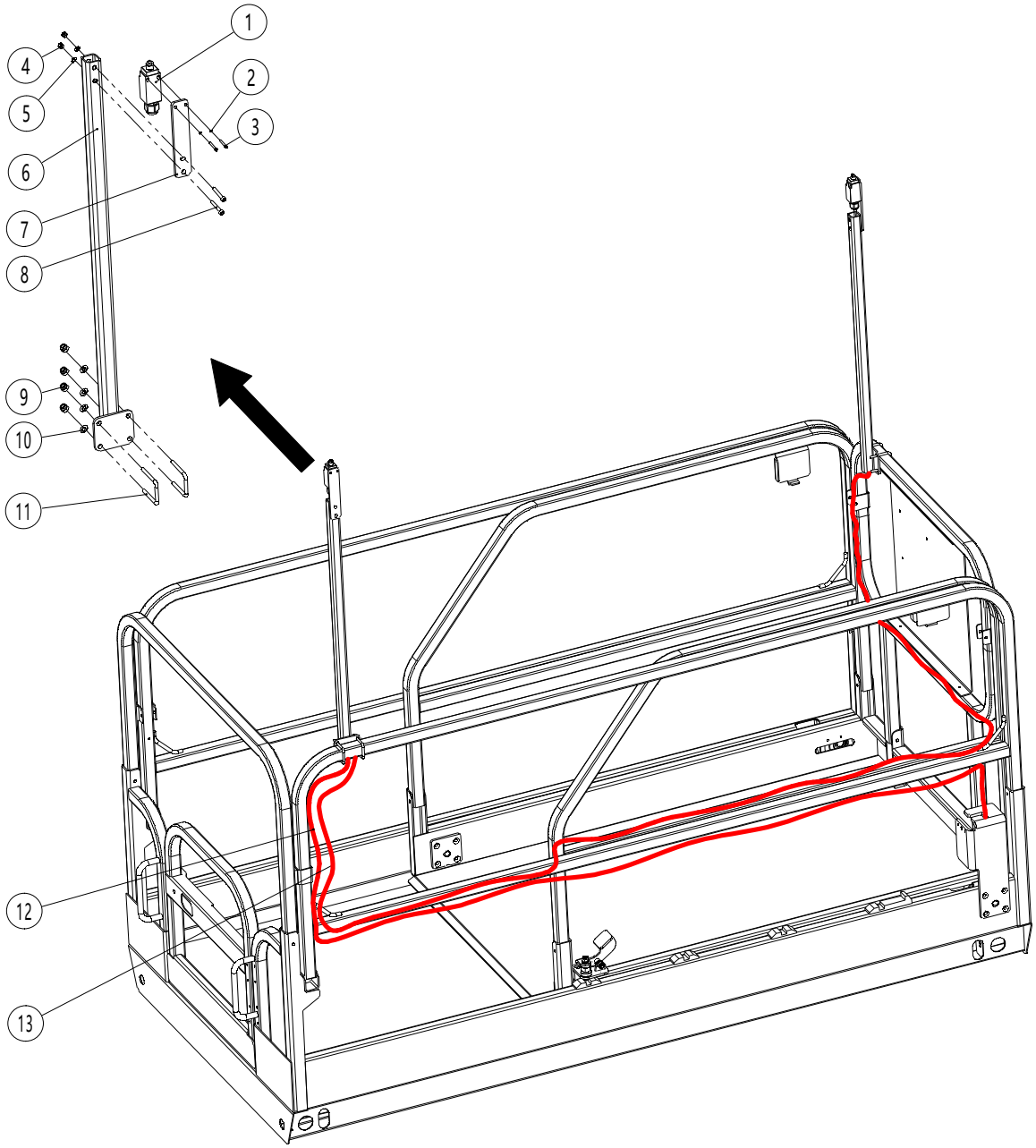

Table 25 Parts of collision protection mechanism(optional)

NO.	Art No.	Description	Qty.	Note
1	920200600003	Limit switch	2	
2	910400500004	Washer	4	
3	910200200022	Screw	4	
4	910300500004	Nut	4	
5	910400100006	Washer	4	
6	602019510007	Pole	2	
7	602019520026	Plate	2	
8	910100100024	Bolt	4	
9	910300500003	Nut	8	
10	910400100005	Washer	8	
11	602019520027	U Bolt	4	
12	601519510000	Wiring harness	1	SC10H/E
	602019510006			SC12H/E
	602519510000			SC14H/E
	600519510001			SC08HN/SC08EN
	601019510001			SC10HN/SC10EN
13	602019510005	Wiring harness	1	SC10H/SC12H/SC14H SC10E/SC12E/SC14E
	601019510000			SC08HN/SC10HN SC08EN/SC10EN