Print Number: Print Date:

NOBLELIFT
Material Handling

Scan QR Code for More

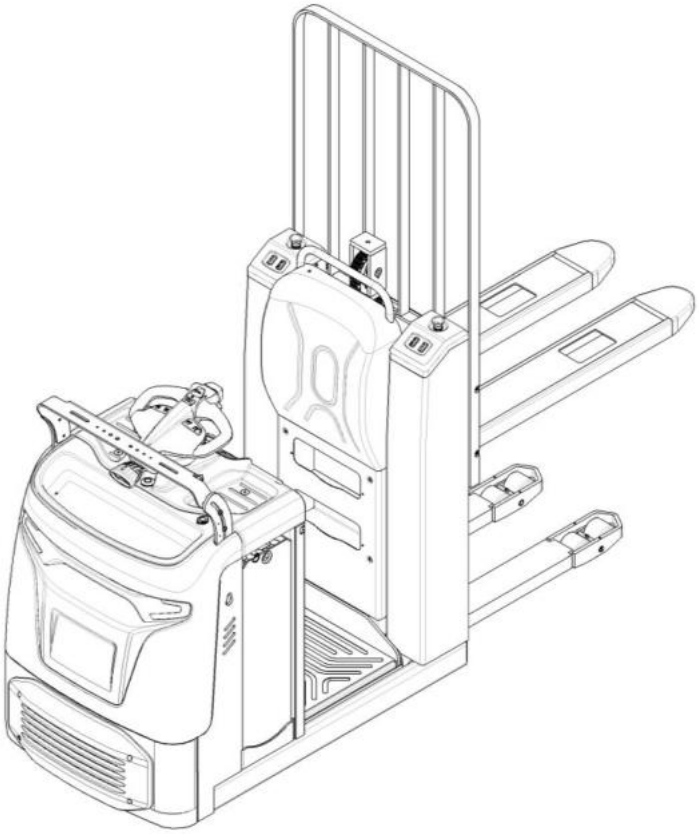

Low Lift Order Picker

OPL12

Parts Manual

566846020101

Version V01

Truck Identification Number From:

Parts Manual OPL12-PM01EN

Please order parts from authorized dealers of Noblelift Intelligent Equipment Co., LTD.

In order to avoid wrong delivery, all the orders for spare parts should specify the following items:

- Truck model, identification number and manufacture year.
- Orders for spare parts of mast, hydraulic transmission unit, steering axle, motor, etc. shall indicate the manufacture number of these parts.
- Codes for Noblelift spare parts are shown in the table of parts manual. Please also pay attention to the description of supply status, order quantity, etc. (check the number listed in "Mark" column of the parts manual).

"Mark" Column:

The unmarked indicates the parts are in short supply cycle.

Number 1: supply as package. Indicating these that parts are small parts and seal parts, which are supplied in package unit and in short supply cycle.

Number 2: supply with constraints. Indicating that these spare parts are not in stock and will be prepared for production after receiving the order from customers, which are in long supply cycle.

Number 3: phasing-out supply. Indicating that these parts will be replaced by new parts due to technical improvements and the current stock will not be available when these parts run out. Please check the description of technical improvements notice.

Number 4: supply as assembly. Indicating that these parts are assembly parts defined by manufacture process, which cannot be supplied as a single part.

Number 5: check other tables.

This parts manual is the property of Noblelift and can be shared under the confidential agreement only, Noblelift has the right to claim for compensation of any unauthorized use. Copy without permission is not allowed. Figures in the manual are not limited by the original design. Noblelift Intelligent Equipment Co., LTD reserves the right to improve the products for continuous technology progress.

Table of Contents

Chapter 1: Drive system 1
01 Drive unit (566546013501) 1
Chapter 2: Hydraulic system 3
01 Hydraulic assembly (566846024001) 3
02 Hydraulic unit (566546024002) 5
03 Hydraulic assembly (566846024501) 7
04 Hydraulic unit (566546024502) 11
Chapter 3: Truck Frame 13
01 Chassis (566846021501) 13
02 Chassis (566846021502) 17
03 Chassis (566846021503) 21
04 Cover (566846021504) 25
05 Platform (566546018001) 27
06 Platform (566546018002) 29
07 Caster (566546016501) 33
08 Fork carriage (566846038501) 35
09 Load backrest (566846038501) 37
Chapter 4: Steering system, braking system, wheels 39
01 Operating panel (566546010001) 39
02 Control Handle (566546010002) 43
Chapter 5: Electrical parts 45
01 Electronic control components (566546033001) 45
02 Wiring Harness (566546033002) 49
03 Charger (566546036501) 51
04 Traction Battery (566546037001) 53
Chapter 6: Others 55
01 Labels and decals (US) (566846047003) 55
02 Labels and decals (EU) (566846047004) 57
Appendix 59
01 Electrical Circuit Diagram - standard (566546045501) 59
02 Electrical Circuit Diagram - optional (566546045502) 60
03 Hydraulic Circuit Diagram - standard (566546045505) 61
04 Hydraulic Circuit Diagram - optional (566546045506) 62
05 Consumable Parts List 63

Chapter 1: Drive system

01 Drive unit (566546013501)

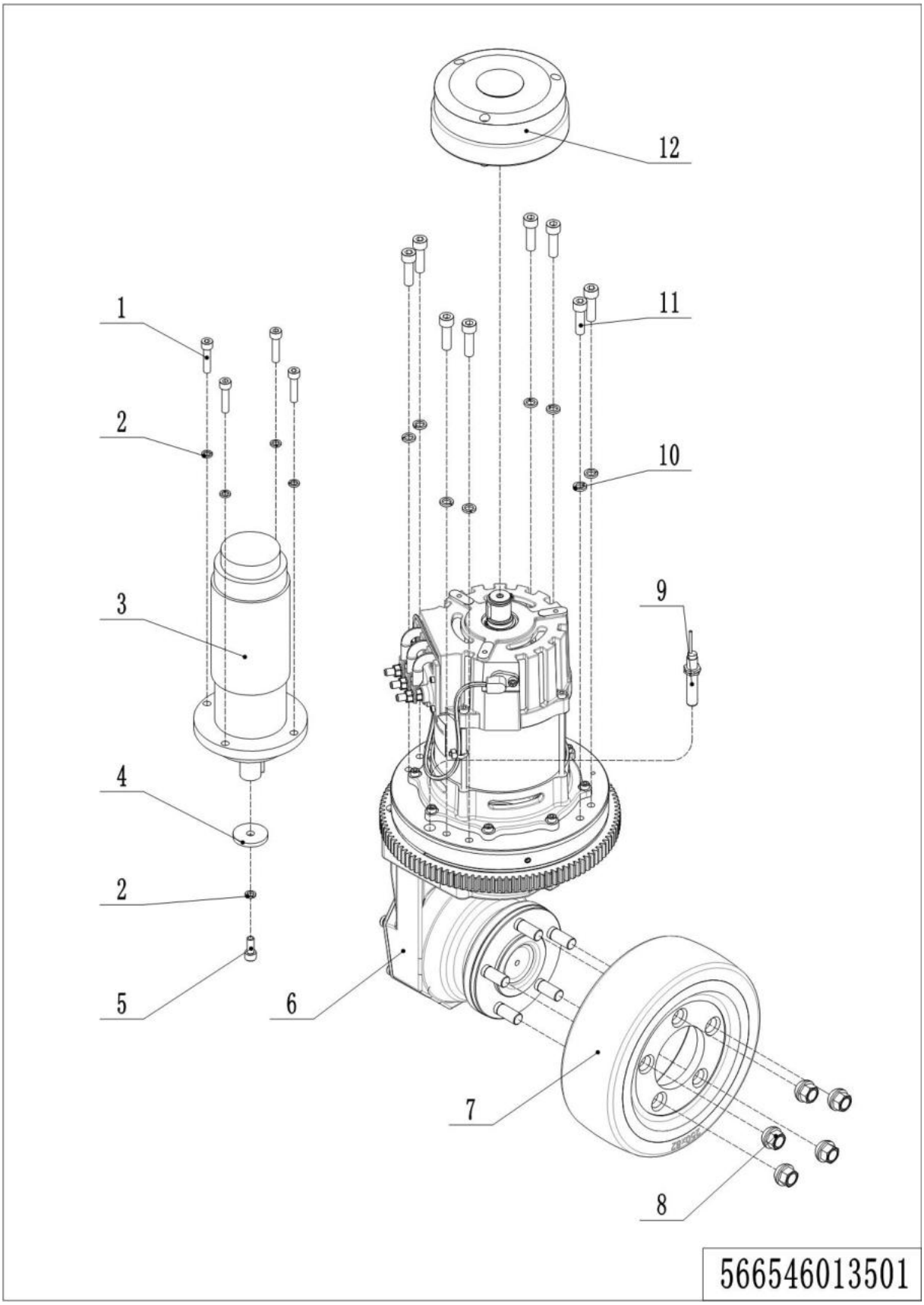

01 Drive unit (566546013501)

No.	Item Code	Mark	Item Description	Qty.	Substitute	Note
1	910200200059	1	Screw	4		
2	910400500006	1	Spring Washer	5		
3	920900100050		Motor	1		
4	506013520001		Baffle	1		
5	910200200057	1	Screw	1		
6	940900600004		Steering Unit	1		
7	940300400002		WheelΦ250x82	1		
8	275015520005		Nut	5		
9	565933510001		Proximity Switch	1		
10	910400500007	1	Spring Washer	8		
11	910200200077	1	Screw	8		
12	566511510000		Brake	1		

Chapter 2: Hydraulic system

01 Hydraulic assembly (566846024001)

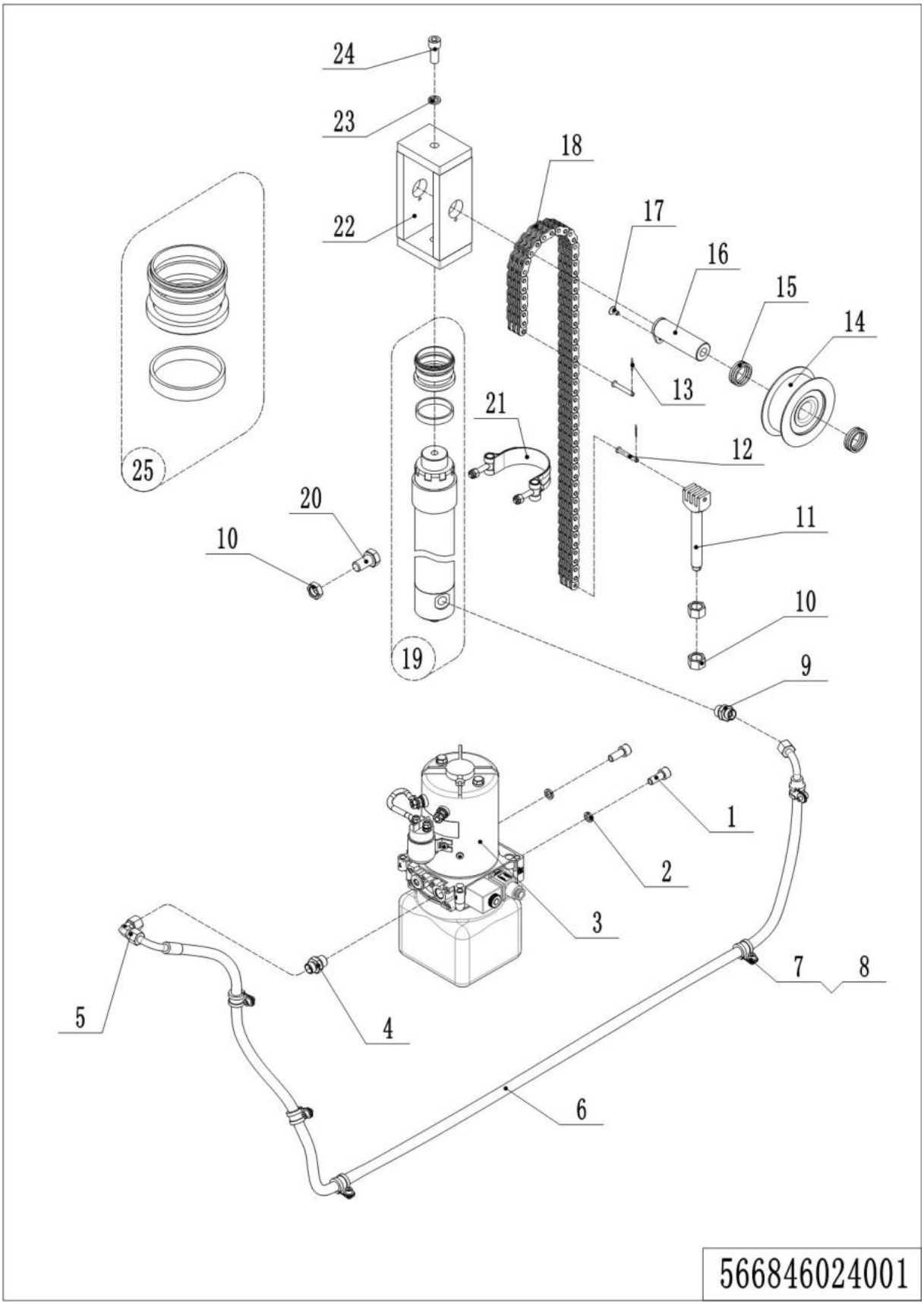

01 Hydraulic assembly (566846024001)

No.	Item Code	Mark	Item Description	Qty.	Substitute	Note
1	910200200076	1	Screw	2		
2	910400500007	1	Spring Washer	2		
3	950900100024		Pump Unit	1		
4	950400300007		Joint	1		
5	950400200003		Joint	1		
6	566524020001		Hydraulic Tube	1		
7	951000100003		Hose Clamp	5		
8	910200200032	1	Screw	5		
9	950400400003		Joint	1		
10	910300100010		Nut	3		
11	535045020024		Chain Anchor	1		
12	910600700018	1	Pin	2		
13	910600600006	1	Cotter Pin	2		
14	940200500010		Sprocket Bearing	1		
15	940600500009		Washer	6		
16	535045010008		Pin	1		
17	910100300068		Bolt	1		
18	566824020000		Leaf Chain	1		
19	566824010001		Cylinder	1		
20	910100300068		Bolt	1		
21	940800600002		Hoop	1		
22	204444510003		Wheel Carrier	1		
23	910400500008	1	Spring Washer	1		
24	910200200098	1	Screw	1		
25	566898510000		Seal Kit	1		

02 Hydraulic unit (566546024002)

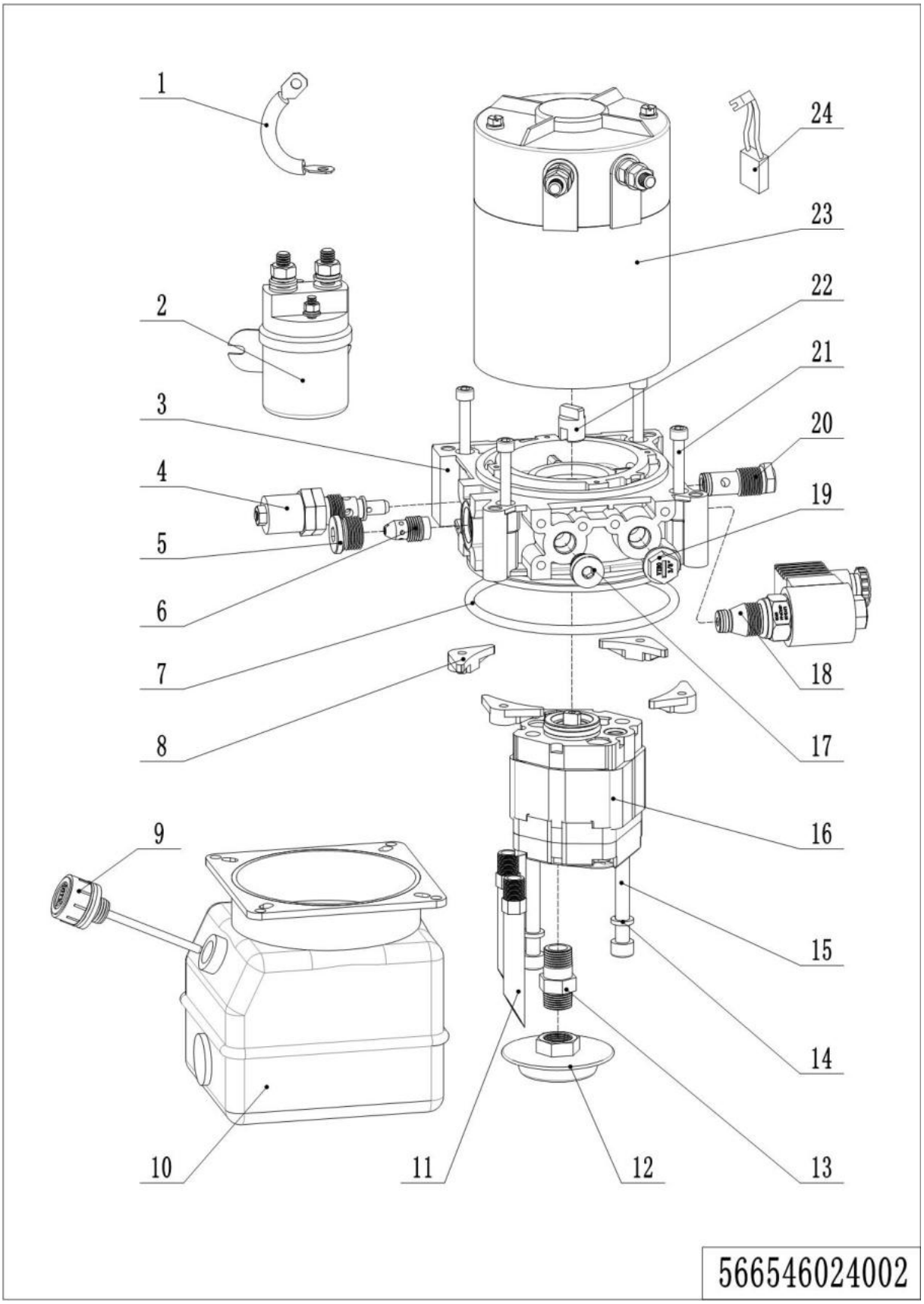

02 Hydraulic unit (566546024002)

No.	Item Code	Mark	Item Description	Qty.	Substitute	Note
1	505798510004		Cables	1		
2	532098510002		Switch	1		
3	505798520005		Valve Block	1		
4	505798510007		Overflow Valve	1		
5	402698520020		Plug	1		
6	505798510006		Compensation Valve	1		
7	910800100088		O-Ring	1		
8	505798520008		Nut	4		
9	505698520047		Cap-Tank	1		
10	505798520009		Tank	1		
11	505798520012		Pipe	2		
12	402698520010		Filter	1		
13	505798520010		Oil Tube	1		
14	910400500006		Spring Washer	2		
15	910200200070		Screw	2		
16	532098510000		Gear Pump	1		
17	505798520014		End Cap	1		
18	532098510006		Magnetic Valve	1		
19	505798520015		End Cap	1		
20	505798510012		Check Valve	1		
21	910200200042		Screw	4		
22	505798520018		Coupling	1		
23	532098510001		Motor	1		
24	505798510013		Carbon Brush	4		

03 Hydraulic assembly (566846024501)

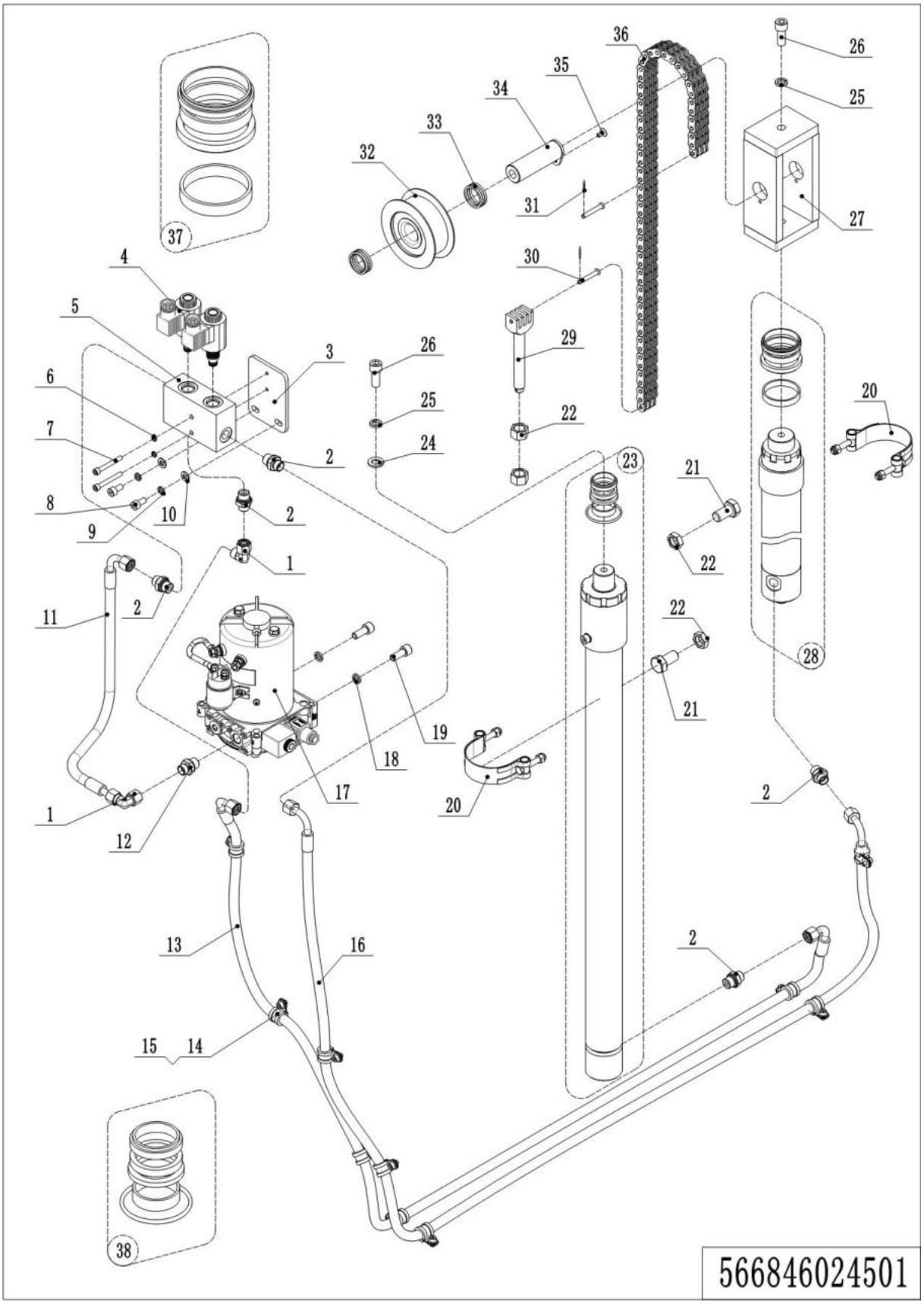

03 Hydraulic assembly (566846024501)

No.	Item Code	Mark	Item Description	Qty.	Substitute	Note
1	950400200003		Joint	2		
2	950400300007		Joint	4		
3	566521520053		Connecting Plate	1		
4	950700200003		Valve	2		
5	560524020001		Valve Block	1		
6	910400500005	1	Spring Washer	2		
7	910200200043	1	Screw	2		
8	910200200055	1	Screw	2		
9	910400500006	1	Spring Washer	2		
10	910400100006	1	Flat Washer	2		
11	566524520001		Hydraulic Tube	1		
12	950400300007		Joint	1		
13	566524520003		Hydraulic Tube	1		
14	951000100003		Hose Clamp	10		
15	910200200032	1	Screw	10		
16	566524520002		Hydraulic Tube	1		
17	950900100045		Pump Unit	1		
18	910200200076	1	Screw	2		
19	910400500007	1	Spring Washer	2		
20	940800600002		Hoop	1		
21	910100300068		Bolt	1		
22	910300300008		Nut	1		
23	566524510001		Cylinder	1		
24	910400100008	1	Flat Washer	2		
25	910400500008	1	Spring Washer	2		
26	910200200100	1	Screw	2		
27	204444510003		Wheel Carrier	1		
28	566824010001		Cylinder	1		
29	535045020024		Chain Anchor	1		
30	910600700018	1	Pin	2		

03 Hydraulic assembly (566846024501) (Continuation)

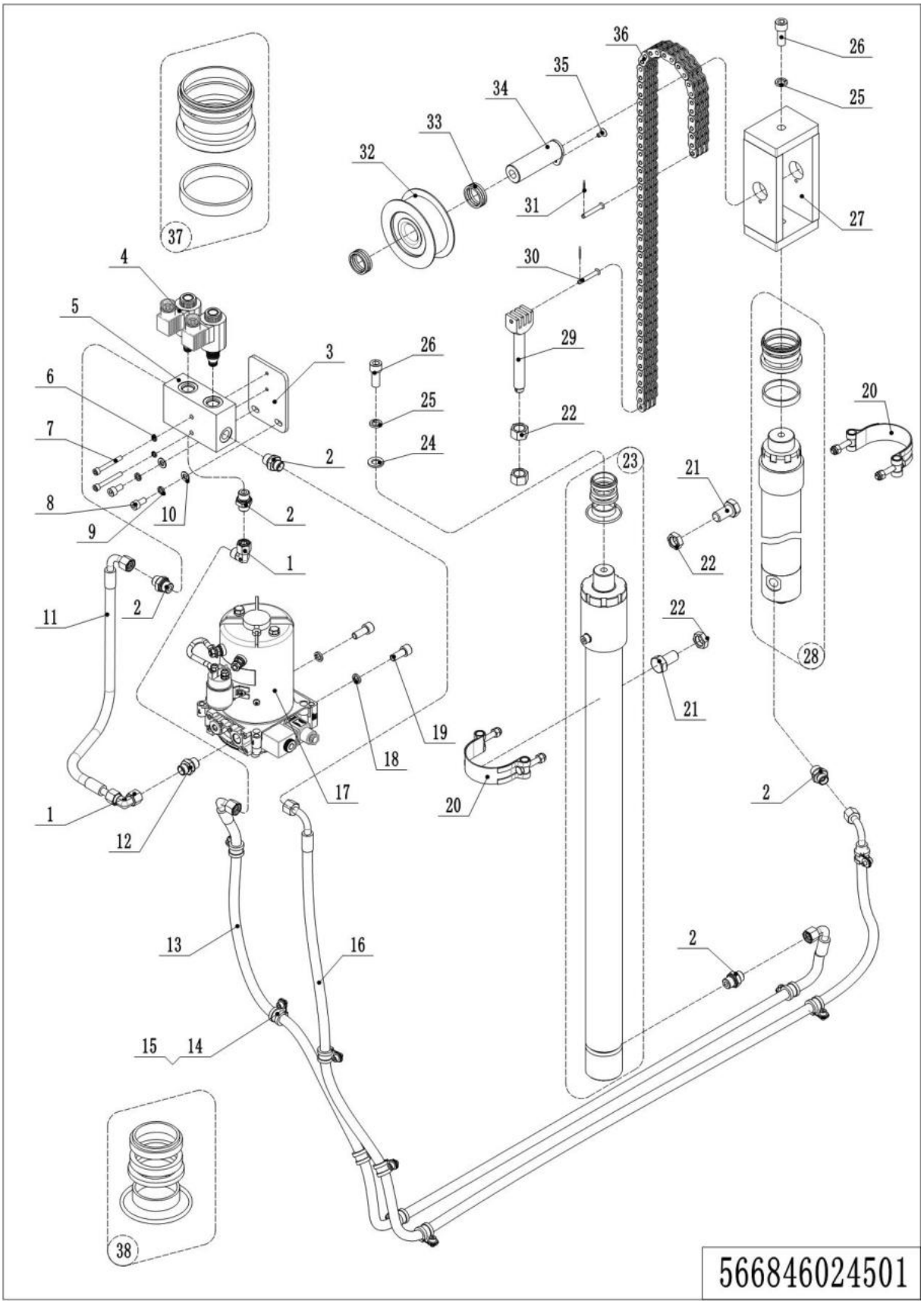

03 Hydraulic assembly (566846024501) (Continuation)

No.	Item Code	Mark	Item Description	Qty.	Substitute	Note
31	910600600006	1	Cotter Pin	2		
32	940200500010		Sprocket Bearing	1		
33	940600500009		Washer	6		
34	535045010008		Pin	1		
35	910100300068		Bolt	1		
36	566824020000		Leaf Chain	1		
37	566898510000		Seal Kit	1		
38	566898510001		Seal Kit	1		

04 Hydraulic unit (566546024502)

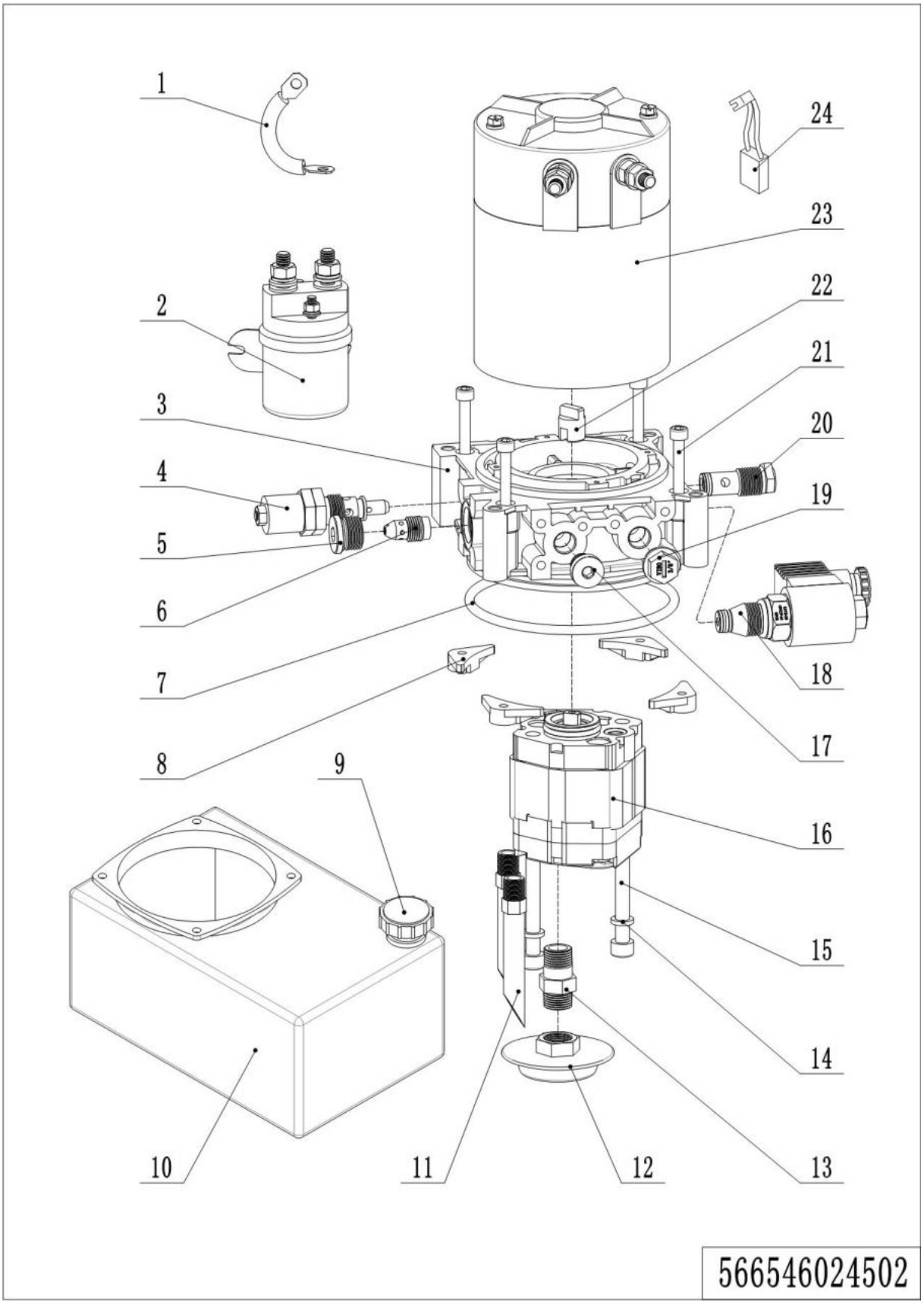

04 Hydraulic unit (566546024502)

No.	Item Code	Mark	Item Description	Qty.	Substitute	Note
1	505798510004		Cables	1		
2	532098510002		Switch	1		
3	505798520005		Valve Block	1		
4	505798510007		Overflow Valve	1		
5	402698520020		Plug	1		
6	505798510006		Compensation Valve	1		
7	910800100088		O-Ring	1		
8	505798520008		Nut	4		
9	951100200001		Screw Plug	1		
10	566519010001		Oil Tank	1		
11	505798520012		Pipe	2		
12	402698520010		Filter	1		
13	505798520010		Oil Tube	1		
14	910400500006		Spring Washer	2		
15	910200200070		Screw	2		
16	532098510000		Gear Pump	1		
17	505798520014		End Cap	1		
18	532098510006		Magnetic Valve	1		
19	505798520015		End Cap	1		
20	505798510012		Check Valve	1		
21	910200200042		Screw	4		
22	505798520018		Coupling	1		
23	532098510001		Motor	1		
24	505798510013		Carbon Brush	4		

Chapter 3: Truck Frame

01 Chassis (566846021501)

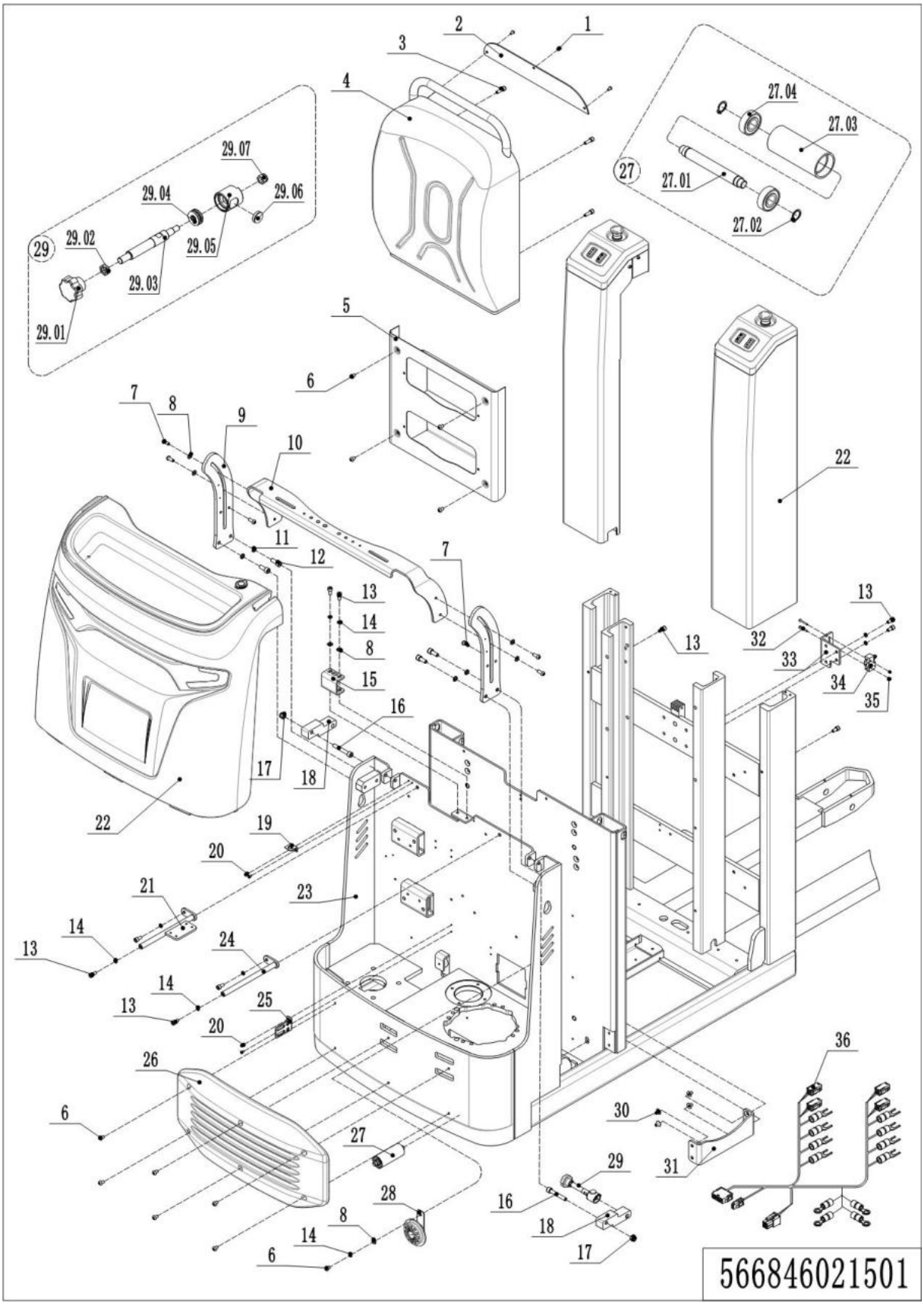

01 Chassis (566846021501)

No.	Item Code	Mark	Item Description	Qty.	Substitute	Note
1	910200300016	1	Screw	3		
2	566518020075		Hose Protection	1		
3	910200200058	1	Screw	4		
4	566521520081		Backrest	1		
5	566521510010		Storage Box	1		
6	910200300023	1	Screw	11		
7	910200300025	1	Screw	6		
8	910400100006	1	Flat Washer	5		
9	566521520051		Mounting Plate	2		
10	566521520070		Bracket	1		
11	910400500007	1	Spring Washer	4		
12	910200200076	1	Screw	4		
13	910200200055	1	Screw	8		
14	910400500006	1	Spring Washer	9		
15	566521520045		Connecting Plate	1		
16	910200200084	1	Screw	2		
17	910300500005	1	Nut	2		
18	566521520052		Lock Block	2		
19	921300300003		Holder	1		
20	910200500036	1	Screw	4		
21	566521510016		Connecting Rod	1		
22	566898510002		Shield	1		
23	566821510000	2	Chassis	1		
24	566521510015		Connecting Rod	1		
25	566521520099		Mounting Plate	1		
26	566521520097		Bumper Rail	1		
27	565921510005		Roller	8		
27.01	565921520063		Axle	1		
27.02	910401300006	1	Circlip	1		
27.03	565921520064		Roller	1		

01 Chassis (566846021501)(Continuation)

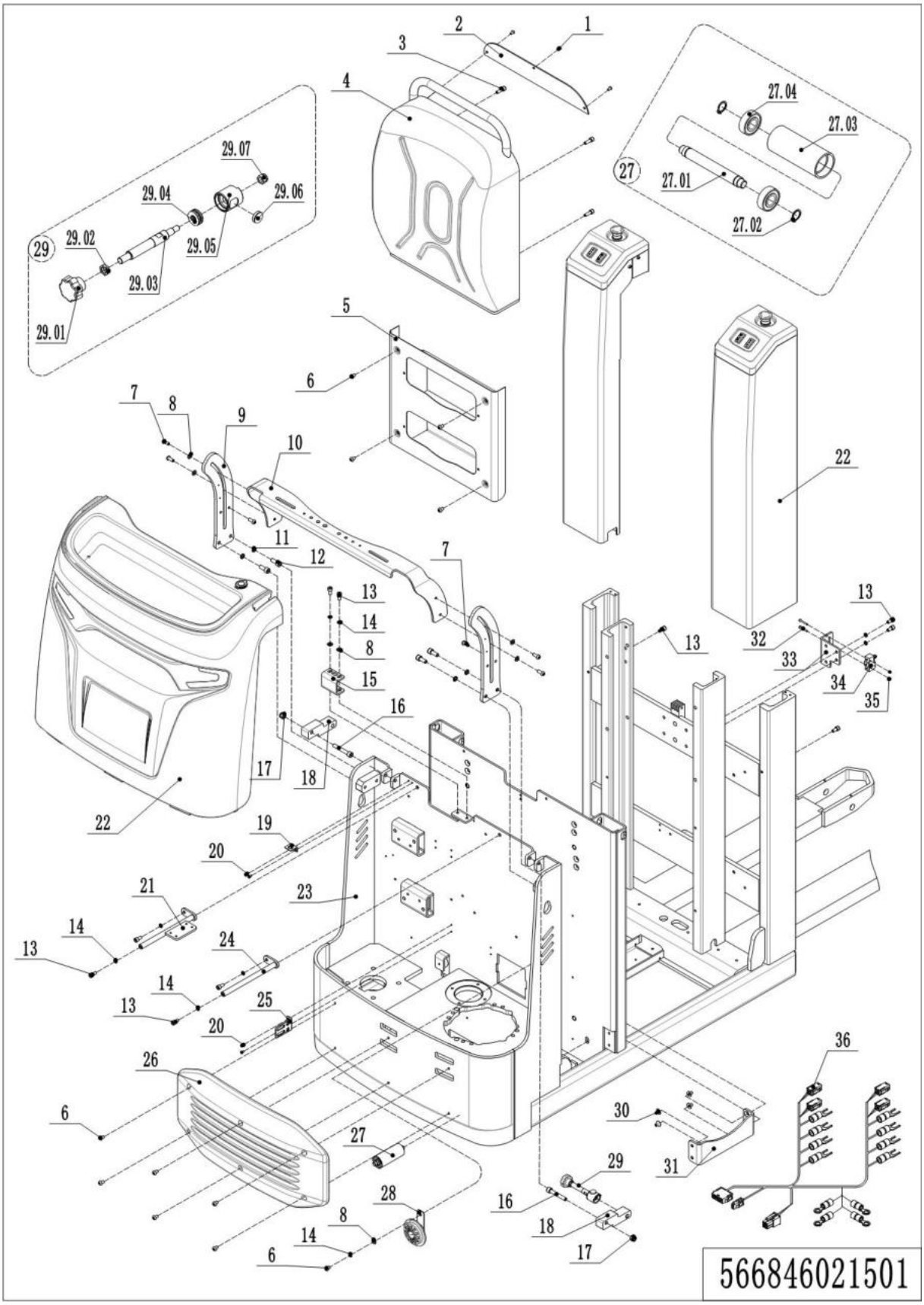

01 Chassis (566846021501)(Continuation)

No.	Item Code	Mark	Item Description	Qty.	Substitute	Note
27.04	910700200017		Bearing	2		
28	920500100001		Horn	1		
29	566521510005		Locking Rod Assembly	1		
29.01	910300500004	1	Nut	1		
29.02	910300300005	1	Nut	1		
29.03	566521520043		Adjusting Rod	1		
29.04	910700700001		Bearing	1		
29.05	566521520042		Locking Block	1		
29.06	940600100001		Magnetic Steel	1		
29.07	910300500004	1	Nut	1		
30	910200400040	1	Screw	4		
31	566521520050		Baffle	1		
32	910200500028	1	Screw	2		
33	566521520056		Mounting Base	1		
34	920200300001		Microswitch	1		
35	910300500001	1	Nut	2		
36	566533010023		Wire Harness	1		

02 Chassis (566846021502)

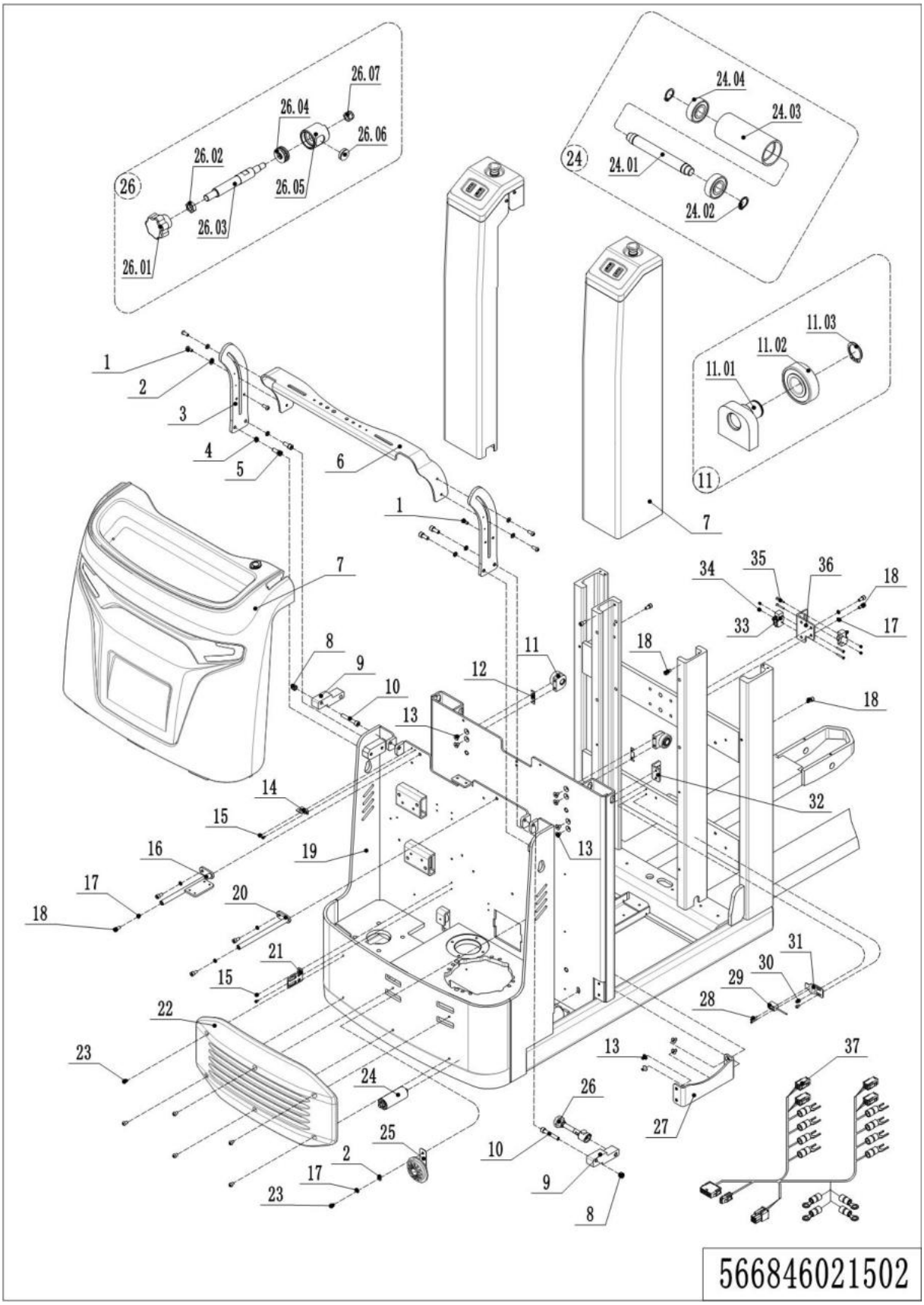

02 Chassis (566846021502)

No.	Item Code	Mark	Item Description	Qty.	Substitute	Note
1	910200300025	1	Screw	6		
2	910400100006	1	Flat Washer	5		
3	566521520051		Mounting Plate	2		
4	910400500007	1	Spring Washer	4		
5	910200200076	1	Screw	4		
6	566521520070		Bracket	1		
7	566898510002		Shield	1		
8	910300500005	1	Nut	2		
9	566521520052		Lock Block	2		
10	910200200084	1	Screw	2		
11	566521510003		Bearing Assembly	2		
11.01	566521510004		Mounting Base	1		
11.02	910700200019		Bearing	1		
11.03	910401300011	1	Circlip	1		
12	566521520055		Gasket	2		
13	910200400040	1	Screw	10		
14	921300300003		Holder	1		
15	910200500036	1	Screw	4		
16	566521510016		Connecting Rod	1		
17	910400500006	1	Spring Washer	9		
18	910200200055	1	Screw	10		
19	566821510000	2	Chassis	1		
20	566521510015		Connecting Rod	1		
21	566521520099		Mounting Plate	1		
22	566521520097		Bumper Rail	1		
23	910200300023	1	Screw	11		
24	565921510005		Roller	8		
24.01	565921520063		Axle	1		
24.02	910401300006	1	Circlip	1		
24.03	565921520064		Roller	1		

02 Chassis (566846021502)(Continuation)

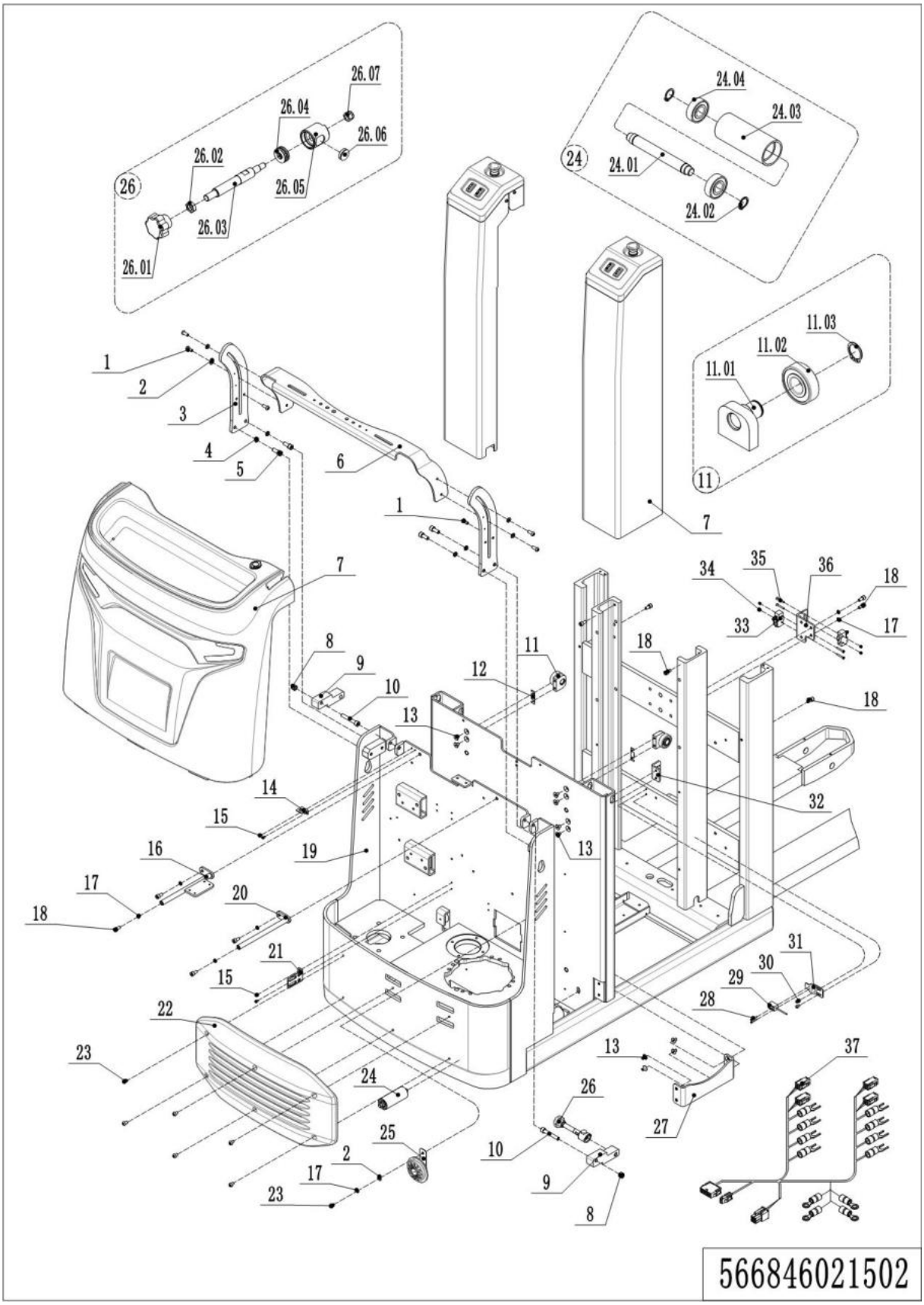

02 Chassis (566846021502)(Continuation)

No.	Item Code	Mark	Item Description	Qty.	Substitute	Note
24.04	910700200017		Bearing	2		
25	920500100001		Horn	1		
26	566521510005		Locking Rod Assembly	1		
26.01	910300500004	1	Nut	1		
26.02	910300300005	1	Nut	1		
26.03	566521520043		Adjusting Rod	1		
26.04	910700700001		Bearing	1		
26.05	566521520042		Locking Block	1		
26.06	940600100001		Magnetic Steel	1		
26.07	910300500004	1	Nut	1		
27	566521520050		Baffle	1		
28	910200200016	1	Screw	2		
29	505633510000		Proximity Switch	1		
30	910200300016	1	Screw	2		
31	566521520057		Connecting Plate	1		
32	566518020015		Mounting Plate	1		
33	920200300001		Microswitch	2		
34	910300500001	1	Nut	4		
35	910200500028	1	Screw	4		
36	566521520056		Mounting Base	1		
37	566533010001		Wire Harness	1		Platform lifting

03 Chassis (566846021503)

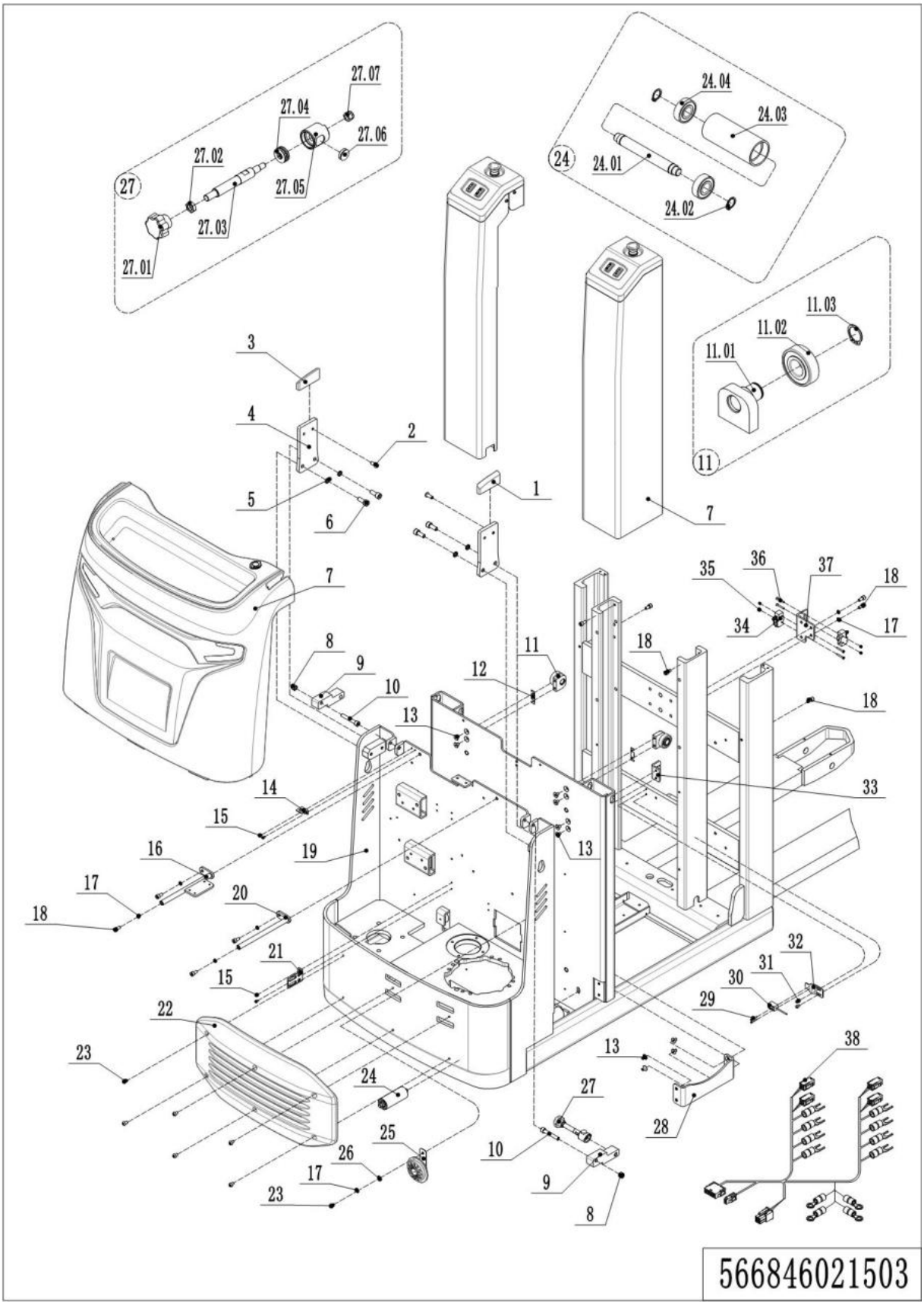

03 Chassis (566846021503)

No.	Item Code	Mark	Item Description	Qty.	Substitute	Note
1	566521520082		Rubber Plug	1		
2	910200300025	1	Screw	2		
3	566521520083		Rubber Plug	1		
4	566521520058		Connecting Plate	2		
5	910400500007	1	Spring Washer	4		
6	910200200076	1	Screw	4		
7	566898510002		Shield	1		
8	910300500005	1	Nut	2		
9	566521520052		Lock Block	2		
10	910200200084	1	Screw	2		
11	566521510003		Bearing Assembly	2		
11.01	566521510004		Mounting Base	1		
11.02	910700200019		Bearing	1		
11.03	910401300011	1	Circlip	1		
12	566521520055		Gasket	2		
13	910200400040	1	Screw	10		
14	921300300003		Holder	1		
15	910200500036	1	Screw	4		
16	566521510016		Connecting Rod	1		
17	910400500006	1	Spring Washer	9		
18	910200200055	1	Screw	10		
19	566821510000	2	Chassis	1		
20	566521510015		Connecting Rod	1		
21	566521520099		Mounting Plate	1		
22	566521520097		Bumper Rail	1		
23	910200300023	1	Screw	11		
24	565921510005		Roller	8		
24.01	565921520063		Axle	1		
24.02	910401300006	1	Circlip	1		
24.03	565921520064		Roller	1		

03 Chassis (566846021503)(Continuation)

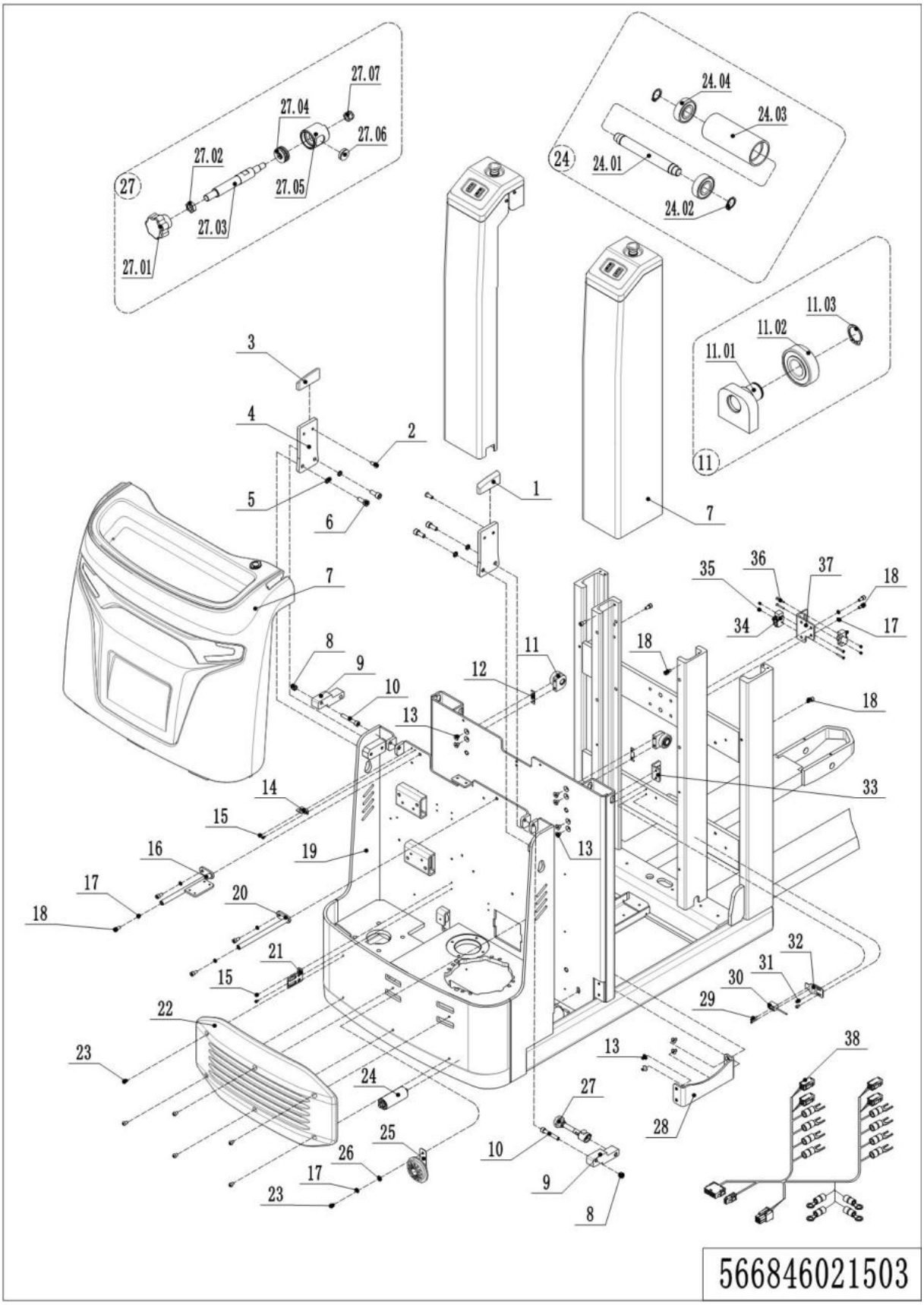

03 Chassis (566846021503)(Continuation)

No.	Item Code	Mark	Item Description	Qty.	Substitute	Note
24.04	910700200017		Bearing	2		
25	920500100001		Horn	1		
26	910400100006	1	Flat Washer	1		
27	566521510005		Locking Rod Assembly	1		
27.01	910300500004	1	Nut	1		
27.02	910300300005	1	Nut	1		
27.03	566521520043		Adjusting Rod	1		
27.04	910700700001		Bearing	1		
27.05	566521520042		Locking Block	1		
27.06	940600100001		Magnetic Steel	1		
27.07	910300500004	1	Nut	1		
28	566521520050		Baffle	1		
29	910200200016	1	Screw	2		
30	505633510000		Proximity Switch	1		
31	910200300016	1	Screw	2		
32	566521520057		Connecting Plate	1		
33	566518020015		Mounting Plate	1		
34	920200300001		Microswitch	2		
35	910300500001	1	Nut	4		
36	910200500028	1	Screw	4		
37	566521520056		Mounting Base	1		
38	566533010001		Wire Harness	1		Platform lifting

04 Cover (566846021504)

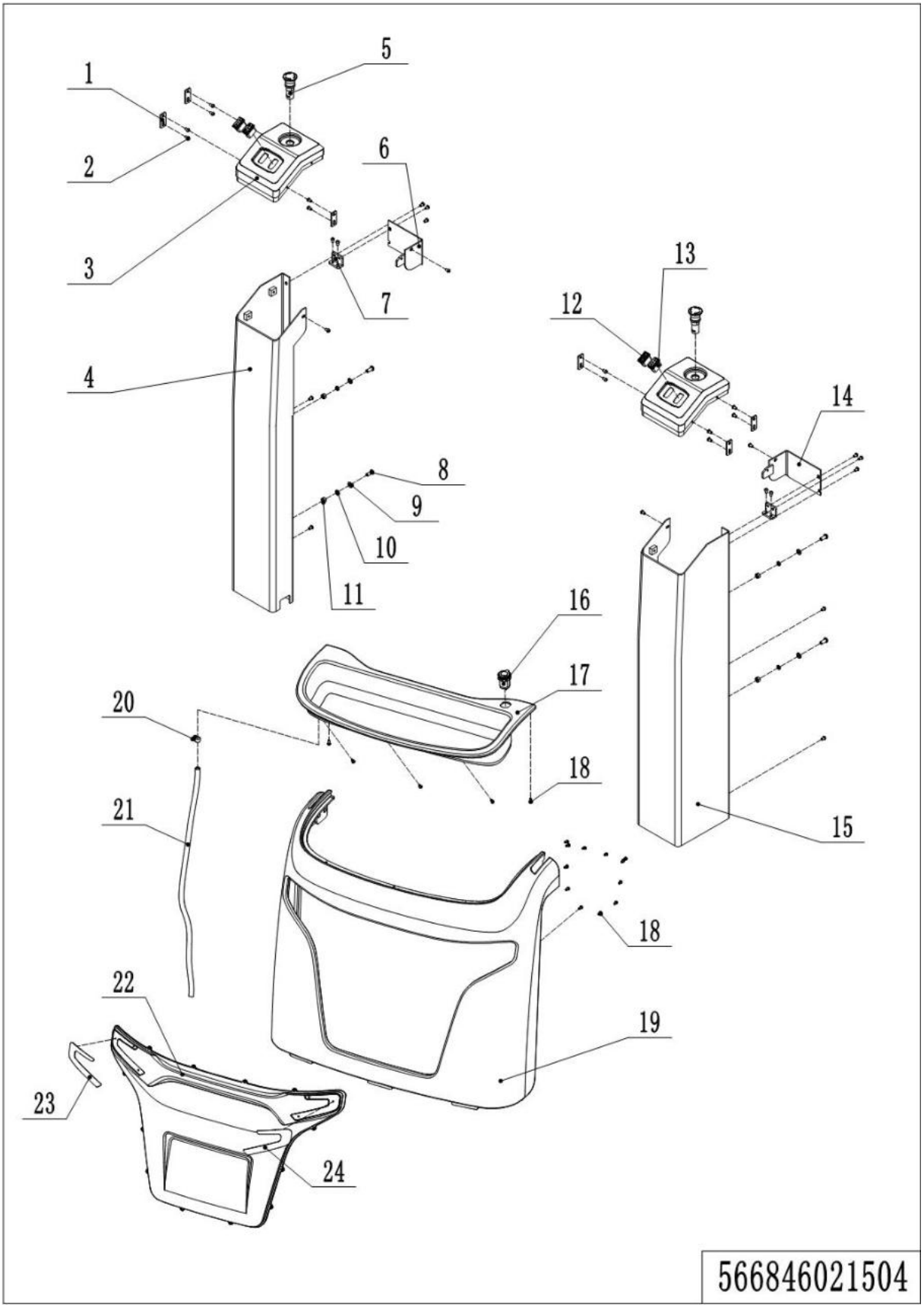

04 Cover (566846021504)

No.	Item Code	Mark	Item Description	Qty.	Substitute	Note
1	566521520064		Connecting Plate	6		
2	910200300016	1	Screw	32		
3	566521520098		Base	2		
4	566821510002	2	Hose Protection	1		
5	920200100021		Emergency Button	2		
6	566521510018		Close Plate	1		
7	566521510009		Connecting Plate	2		
8	910200300025	1	Screw	4		
9	910400500006	1	Spring Washer	4		
10	910400100006	1	Flat Washer	4		
11	910300100006	1	Nut	4		
12	920200800004		Rocker Switch	2		
13	920200800005		Rocker Switch	2		
14	566521510017		Close Plate	1		
15	566821510001	2	Hose Protection	1		
16	921900100006		Converter	1		
17	566521520096		Container	1		
18	910200500037	1	Screw	17		
19	566521520092		Front Cover	1		
20	911000600008		Hose Clamp	1		
21	532210020008		Pipe	1		
22	566521520093		Front Panel	1		
23	566547020001		Reflector	1		
24	566547020002		Reflector	1		

05 Platform (566546018001)

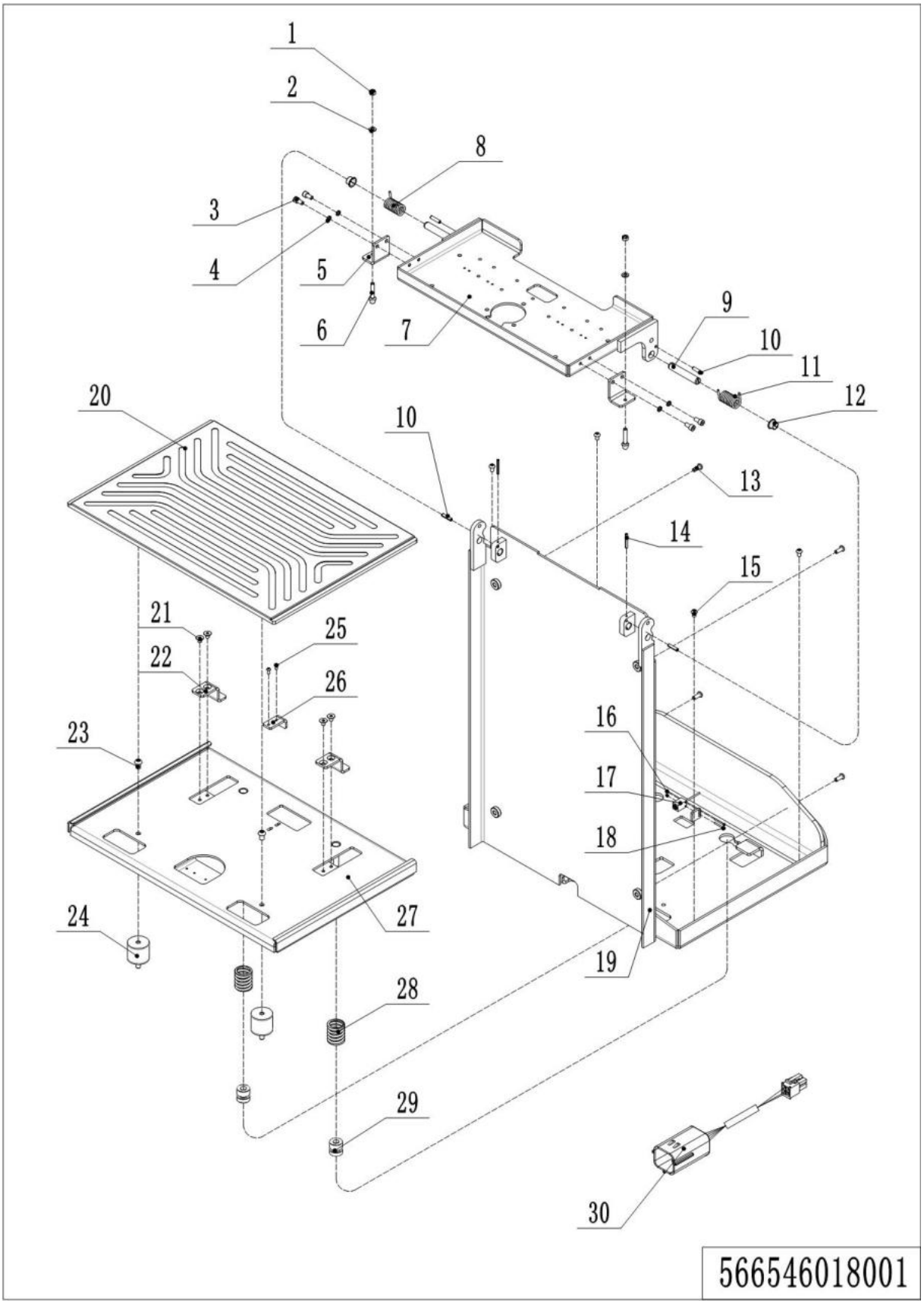

05 Platform (566546018001)

No.	Item Code	Mark	Item Description	Qty.	Substitute	Note
1	910300100006	1	Nut	2		
2	910400100006	1	Flat Washer	2		
3	910200200055	1	Screw	4		
4	910400500006	1	Spring Washer	4		
5	566518020087		Connecting Plate	2		
6	566518020086		Buffer Pad	2		
7	566518010005	2	Operation Panel	1		
8	566518020032		Spring	1		
9	566518020030		Axle	2		
10	910600400038	1	Spring Pin	4		
11	566518020031		Spring	1		
12	940500200018		Bushing	2		
13	910200300025	1	Screw	1		
14	910600400018	1	Spring Pin	2		
15	910200300023	1	Screw	4		
16	910300500011	1	Nut	2		
17	502311010001		Proximity Switch	1		
18	910200500017	1	Screw	2		
19	566518010010	2	Platform	1		
20	566518020093		Foot Pad	1		
21	910200400040	1	Screw	4		
22	566518020089		Stop Plate	2		
23	910200300027	1	Screw	2		
24	566518020088		Shock Absorber	2		
25	910200300012	1	Screw	2		
26	566518020037		Adjusting Plate	1		
27	566518010001	2	Platform	1		
28	940400500004		Spring	2		
29	566518020033		Crash Pad	2		
30	566533010024		Wire Harness	1		

06 Platform (566546018002)

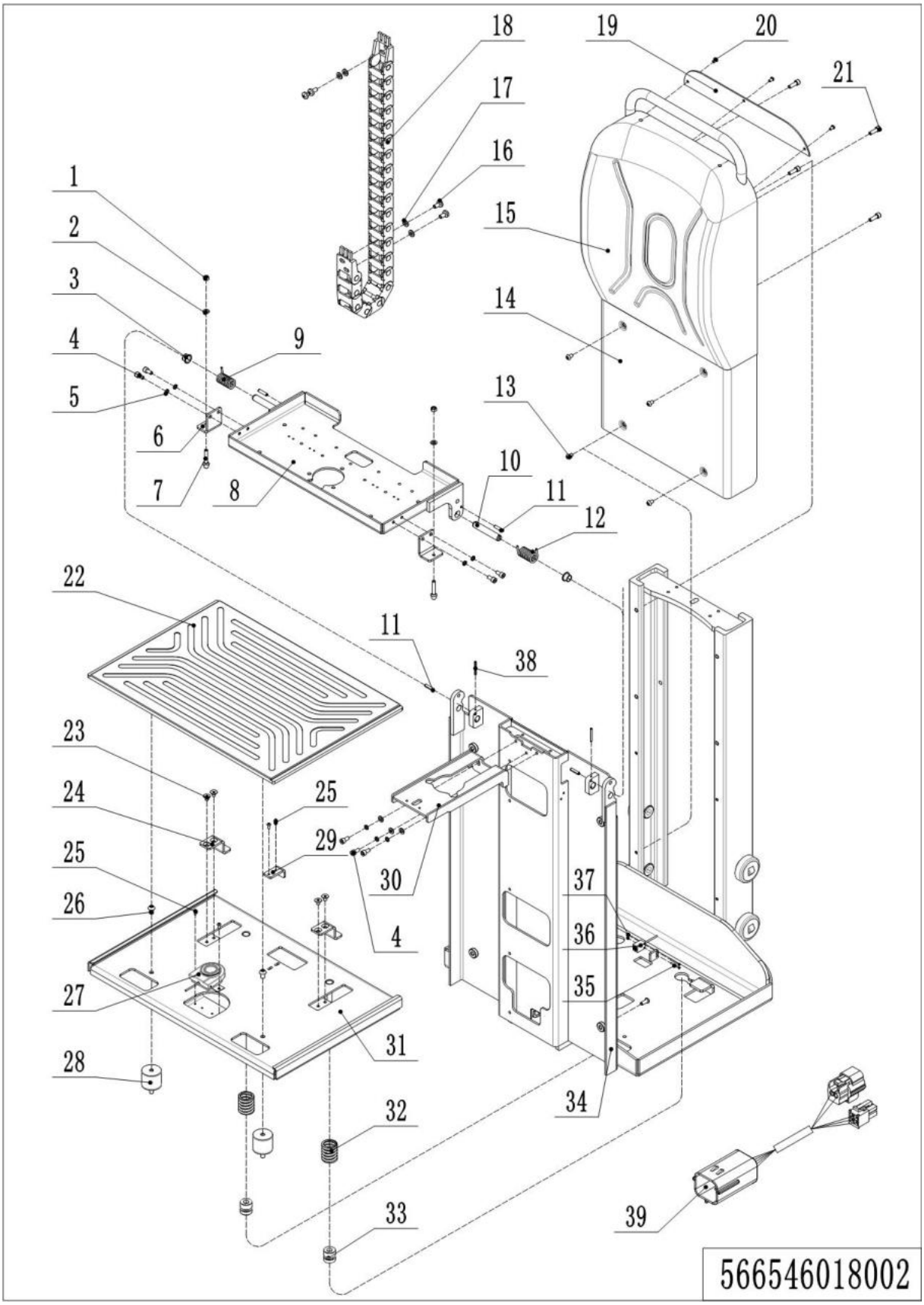

06 Platform (566546018002)

No.	Item Code	Mark	Item Description	Qty.	Substitute	Note
1	910300100006	1	Nut	2		
2	910400100006	1	Flat Washer	2		
3	940500200018		Bushing	2		
4	910200200055	1	Screw	4		
5	910400500006	1	Spring Washer	4		
6	566518020087		Connecting Plate	2		
7	566518020086		Buffer Pad	2		
8	566518010005	2	Operation Panel	1		
9	566518020032		Spring	1		
10	566518020030		Axle	2		
11	910600400038	1	Spring Pin	4		
12	566518020031		Spring	1		
13	910200300023	1	Screw	4		
14	566521520044		Plate	1		
15	566521520081		Backrest	1		
16	910200500051	1	Screw	4		
17	910400100005	1	Flat Washer	4		
18	566533010020		Drag Chain	1		
19	566518020075		Hose Protection	1		
20	910200300016	1	Screw	3		
21	910200200058	1	Screw	4		
22	566518020093		Foot Pad	1		
23	910200400040	1	Screw	4		
24	566518020089		Stop Plate	2		
25	910200300012	1	Screw	4		
26	910200300027	1	Screw	2		
27	566533010018		Switch	1		
28	566518020088		Shock Absorber	2		
29	566518020037		Adjusting Plate	1		
30	566518010004		Stop Plate	1		

1= Supply as package. 2= Supply with constraints. 3= Phasing-out supply. 4= Supply as assembly. 5= Check other tables.

06 Platform (566546018002) (Continuation)

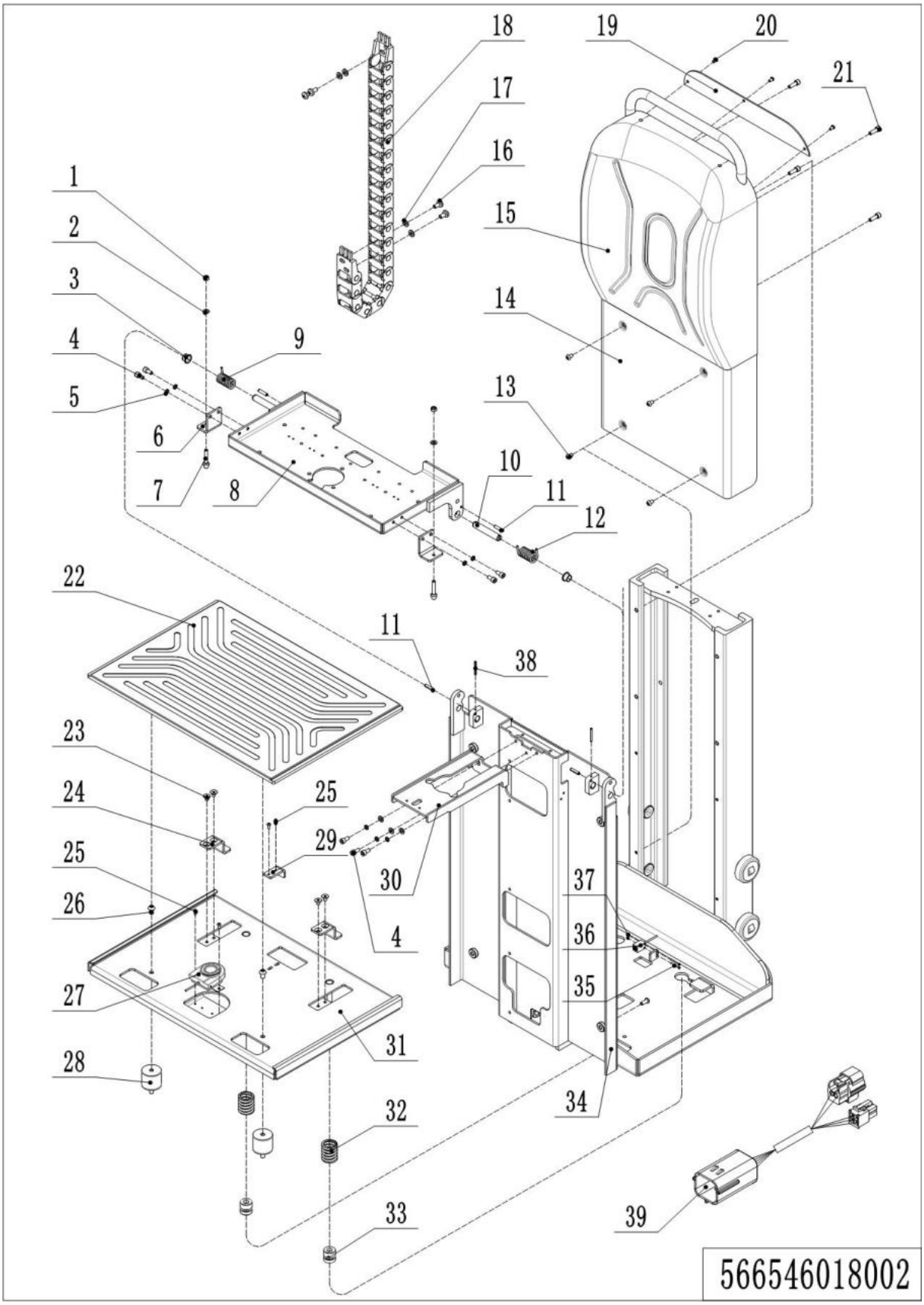

06 Platform (566546018002)(Continuation)

No.	Item Code	Mark	Item Description	Qty.	Substitute	Note
31	566518010001	2	Platform	1		
32	940400500004		Spring	2		
33	566518020033		Crash Pad	2		
34	566518010000	2	Platform	1		
35	910200500017	1	Screw	2		
36	502311010001		Proximity Switch	1		
37	910300500011	1	Nut	2		
38	910600400018	1	Spring Pin	2		
39	566533010004		Wire Harness	1		

07 Caster (566546016501)

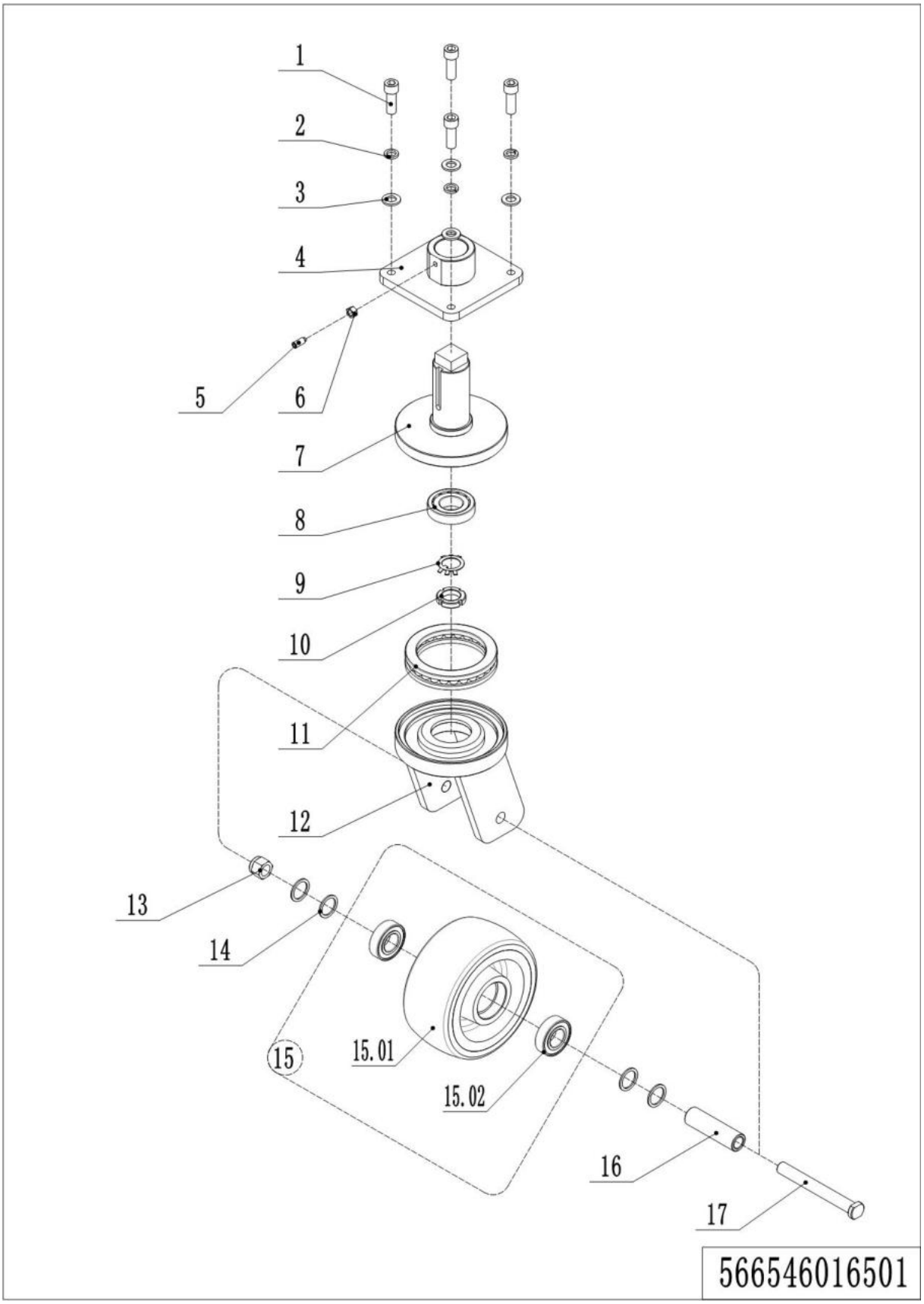

07 Caster (566546016501)

No.	Item Code	Mark	Item Description	Qty.	Substitute	Note
1	910200200099	1	Screw	4		
2	910400500008	1	Spring Washer	4		
3	910400100008	1	Flat Washer	4		
4	566516510002		Connecting Plate	1		
5	910201000012	1	Screw	1		
6	910300100006	1	Nut	1		
7	566516510001		Axle	1		
8	910700600002		Bearing	1		
9	910400900004		Lock Washer	1		
10	910300700001		Nut	1		
11	910700700003		Bearing	1		
12	566516510000		Caster Frame	1		
13	910300500008		Nut	1		
14	940600500006		Washer	4		
15	566598510002		Wheel	1		
15.01	940300300013		WheelΦ180x80	1		
15.02	910700200020		Bearing	2		
16	566516520006		Bushing	1		
17	566516520007		Pin	1		

08 Fork carriage (566846038501)

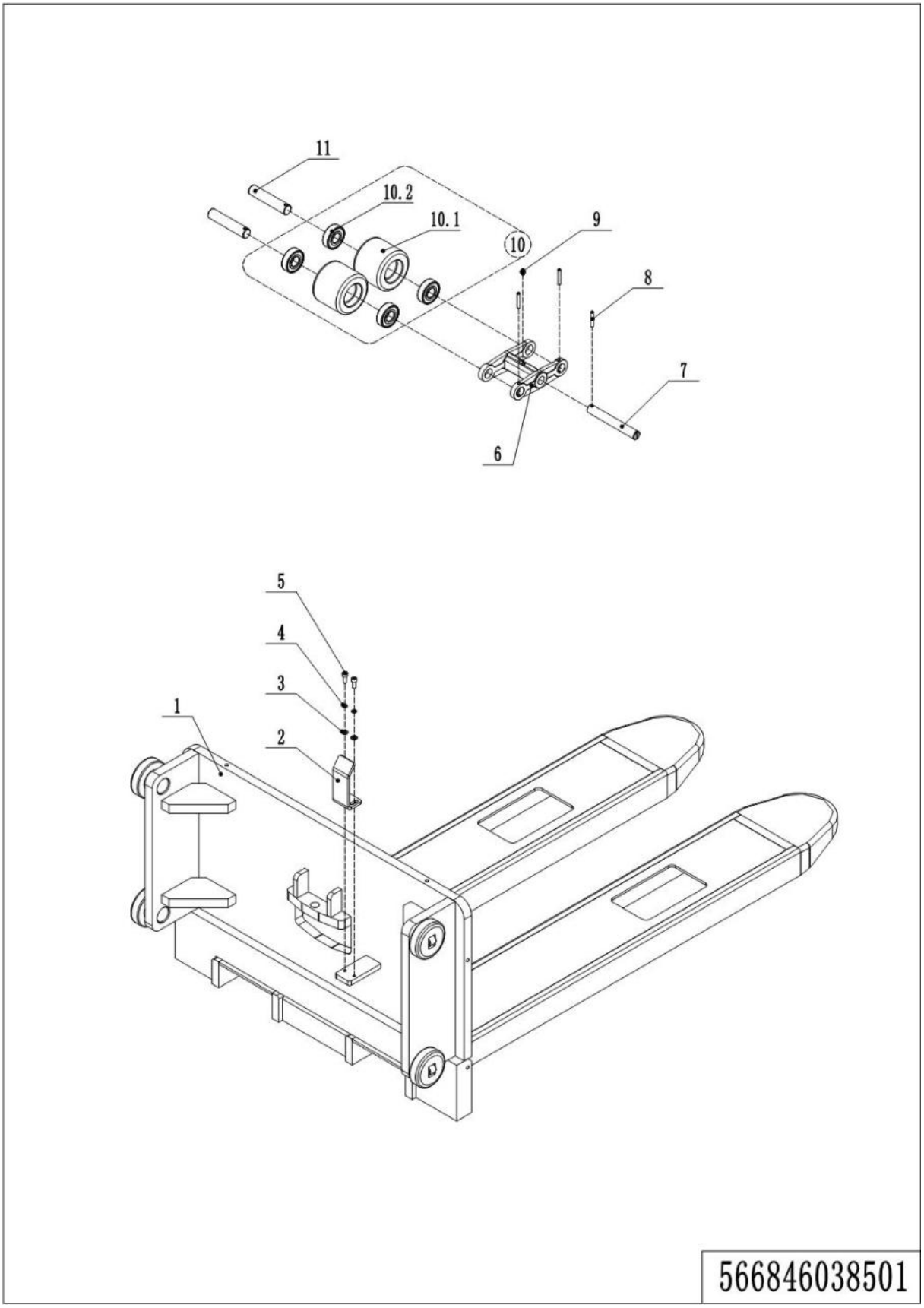

08 Fork carriage (566546038501)

No.	Item Code	Mark	Item Description	Qty.	Substitute	Note
1	566838510000		Fork(540x1150)	1		
2	566538520015		Adjusting Plate	1		
3	910400100005	1	Flat Washer	2		
4	910400500005	1	Spring Washer	2		
5	910200200035	1	Screw	2		
6	504117020004		Wheel Carrier	1		
7	504117020003		Axle	1		
8	910600400027	1	Spring Pin	3		
9	911200100001		Oil Cup	1		
10	566898510003		Wheel	1		
10.01	940300300009		WheelΦ84x70	2		
10.02	910700200019		Bearing	4		
11	504117020005		Axle	2		

09 Load backrest (566846038501)

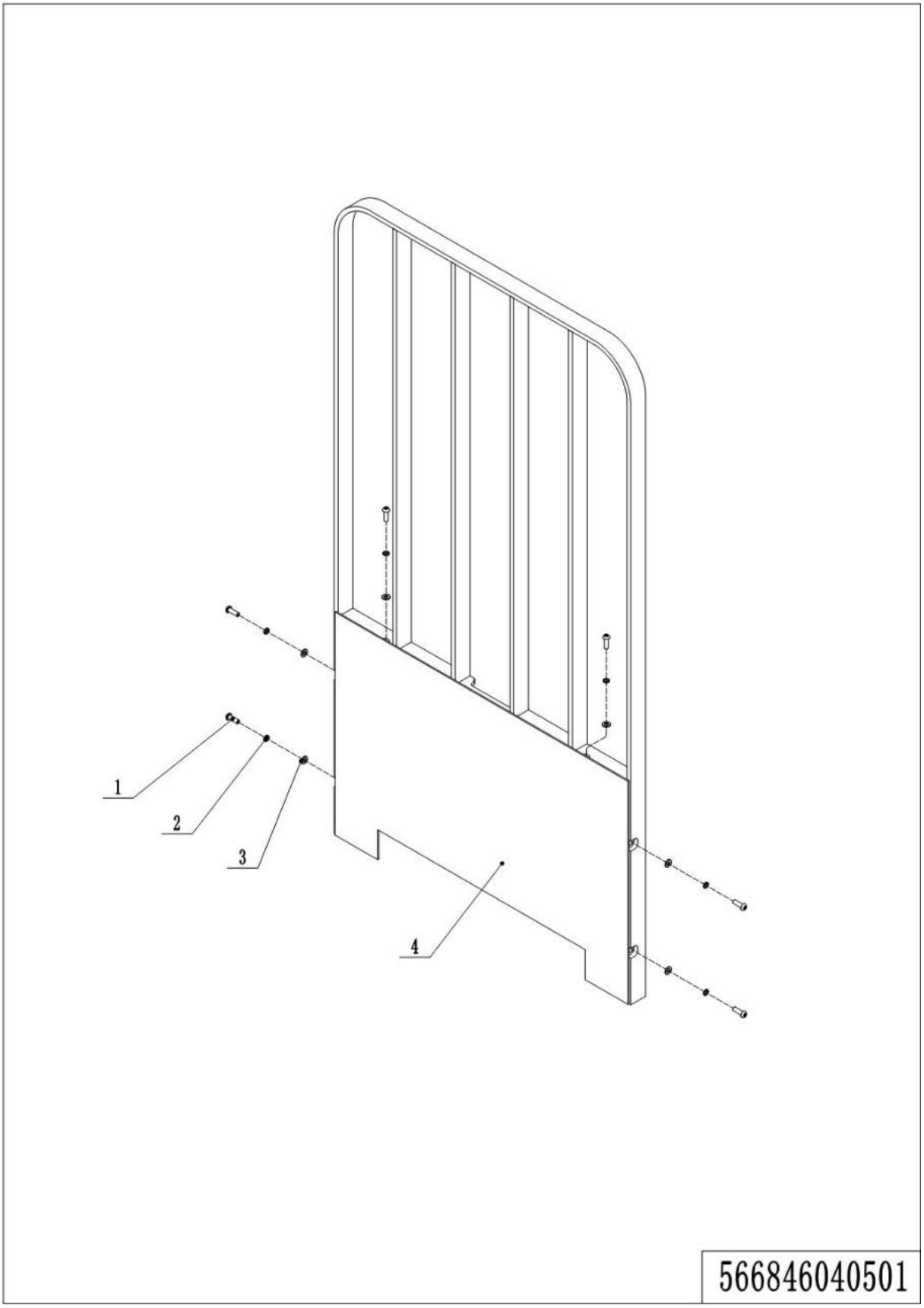

1= Supply as package. 2= Supply with constraints. 3= Phasing-out supply. 4= Supply as assembly. 5= Check other tables.

09 Load backrest (566546038501)(Continuation)

No.	Item Code	Mark	Item Description	Qty.	Substitute	Note
1	910200300026	1	Screw	6		
2	910400500006	1	Spring Washer	6		
3	910400100006	1	Flat Washer	6		
4	566840510000		Load Backrest	6		

Chapter 4: Steering system, braking system, wheels

01 Operating panel (566546010001)

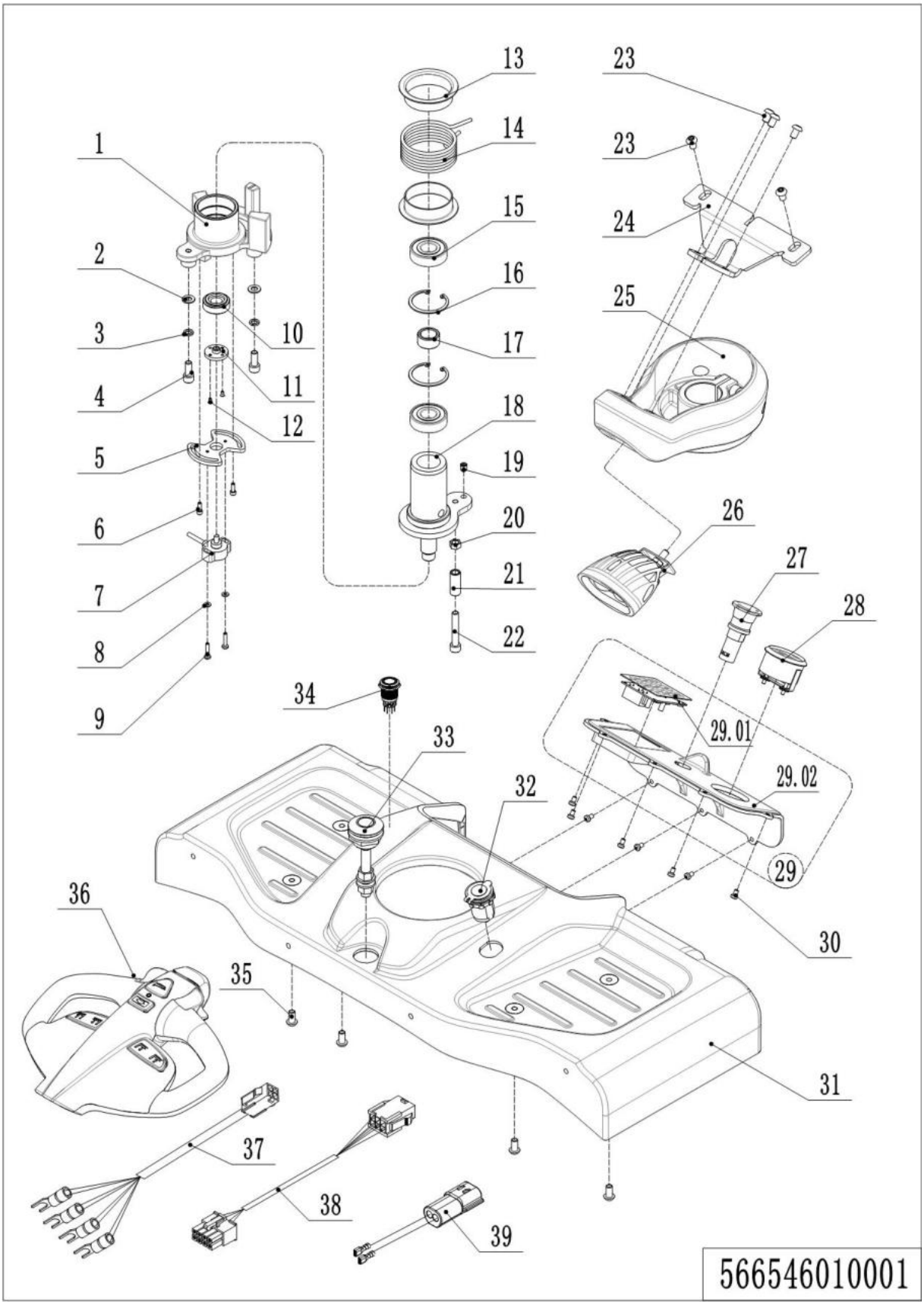

01 Operating panel (566546010001)

No.	Item Code	Mark	Item Description	Qty.	Substitute	Note
1	566531520003		Bracket	1		
2	910400100006	1	Flat Washer	3		
3	910400500006	1	Spring Washer	3		
4	910200200057	1	Screw	3		
5	566531520007		Connecting Plate	1		
6	910200200014	1	Screw	2		
7	565933510000		Potentiometer	1		
8	910400100003	1	Flat Washer	2		
9	910200500026	1	Screw	2		
10	565931520004		Nut	1		
11	565931520005		Link Block	1		
12	910200600001	1	Screw	2		
13	566531520004		Sleeve	2		
14	566531520006		Spring	1		
15	910700200019		Bearing	2		
16	910401400013	1	Circlip	2		
17	566531520008		Sleeve	1		
18	566531510000		Axle	1		
19	566531510001		Plunger	1		
20	910300100006	1	Nut	1		
21	566531520005		Bushing	1		
22	910200200063		Screw	1		
23	910200300023	1	Screw	5		
24	566511020000		Connecting Plate	1		
25	566531520009		Bracket	1		
26	566534510001		Lamp	1		
27	920200100021		Emergency Button	1		
28	921100100077		Display	1		
29	566598510005		Indicator Kit	1		
29.01	566533010021		Pin-code Lock	1		

01 Operating panel (566546010001) (Continuation)

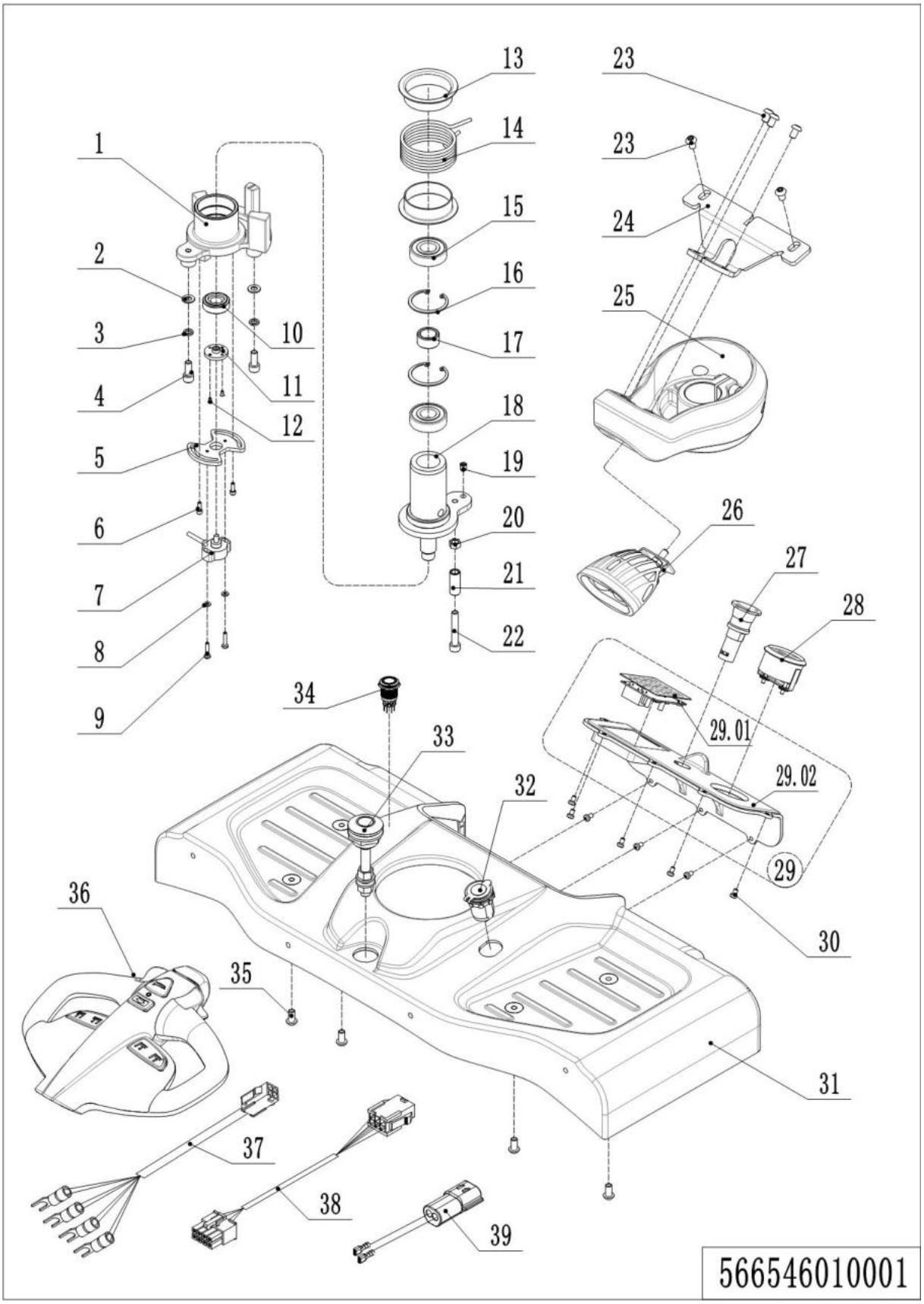

01 Operating panel (566546010001)(Continuation)

No.	Item Code	Mark	Item Description	Qty.	Substitute	Note
29.02	566518020091		Bracket	1		
30	910200500036	1	Screw	8		
31	566518020090		Cover	1		
32	921900100006		Converter	1		
33	566518010011		Lock Catch	1		
34	920200700034		Switch	1		For Li-battery
35	910200300024	1	Screw	4		
36	922100100007		Tiller	1		
37	566533010019		Wire Harness	1		
38	566533010003		Wire Harness	1		
39	566533010026		Wire Harness	1		

02 Control Handle (566546010002)

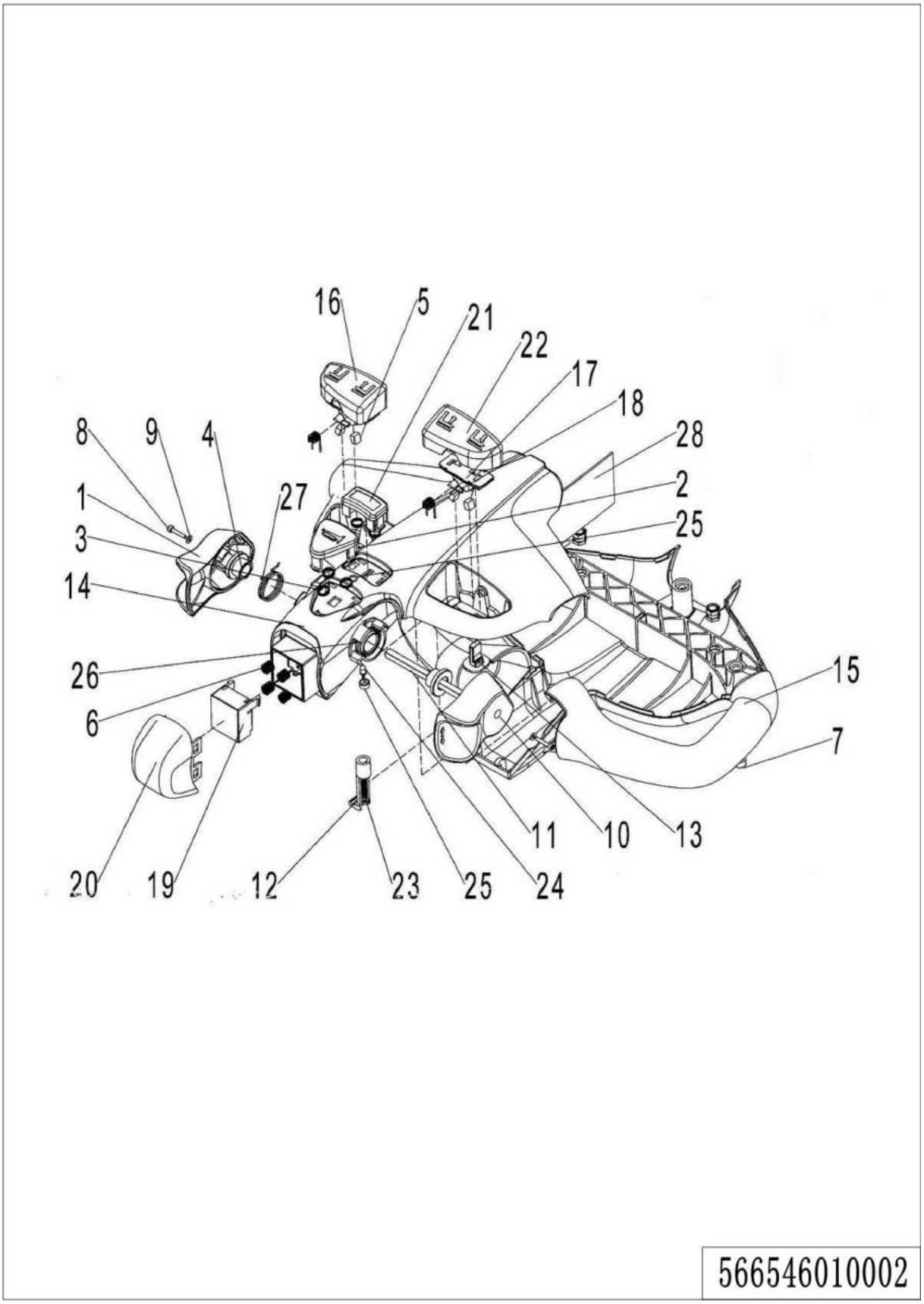

02 Control Handle (566546010002)

No.	Item Code	Mark	Item Description	Qty.	Substitute	Note
1	505698520001		Traction lever	1		
2	505698520002		Horn Button	1		
3	505698520003		Spring	5		
4	505698520004		Sleeve	2		
5	505698520005		Magnet	4		
6	505698520006		Spring	4		
7	505698520007		Screw	3		
8	505698520008		Screw	2		
9	505698520009		Washer	2		
10	505698520010		Traction lever	1		
11	505698520011		Axle-Traction lever	1		
12	505698520012		Clamp	1		
13	505698520013		Sensor	2		
14	505698520014		Handle Cap	1		
15	505698520015		Handle Cap	1		
16	505698520016		Button cap	1		
17	505698520017		Fixing Base	2		
18	505698520018		Torsional Spring	2		
19	505698520019		Pedestal	1		
20	505698520020		Button Cap-	1		
21	505698520021		Button Cap	1		
22	505698520022		Button Cap	1		
23	505698520023		Screw	1		
24	505698520024		Light	1		
25	505698520025		Lamp Holder	1		
26	505698520026		Torsional Spring	1		
27	505698520027		Torsional Spring	1		
28	505698520028		circuit Board	1		

Chapter 5: Electrical parts

01 Electronic control components (566546033001)

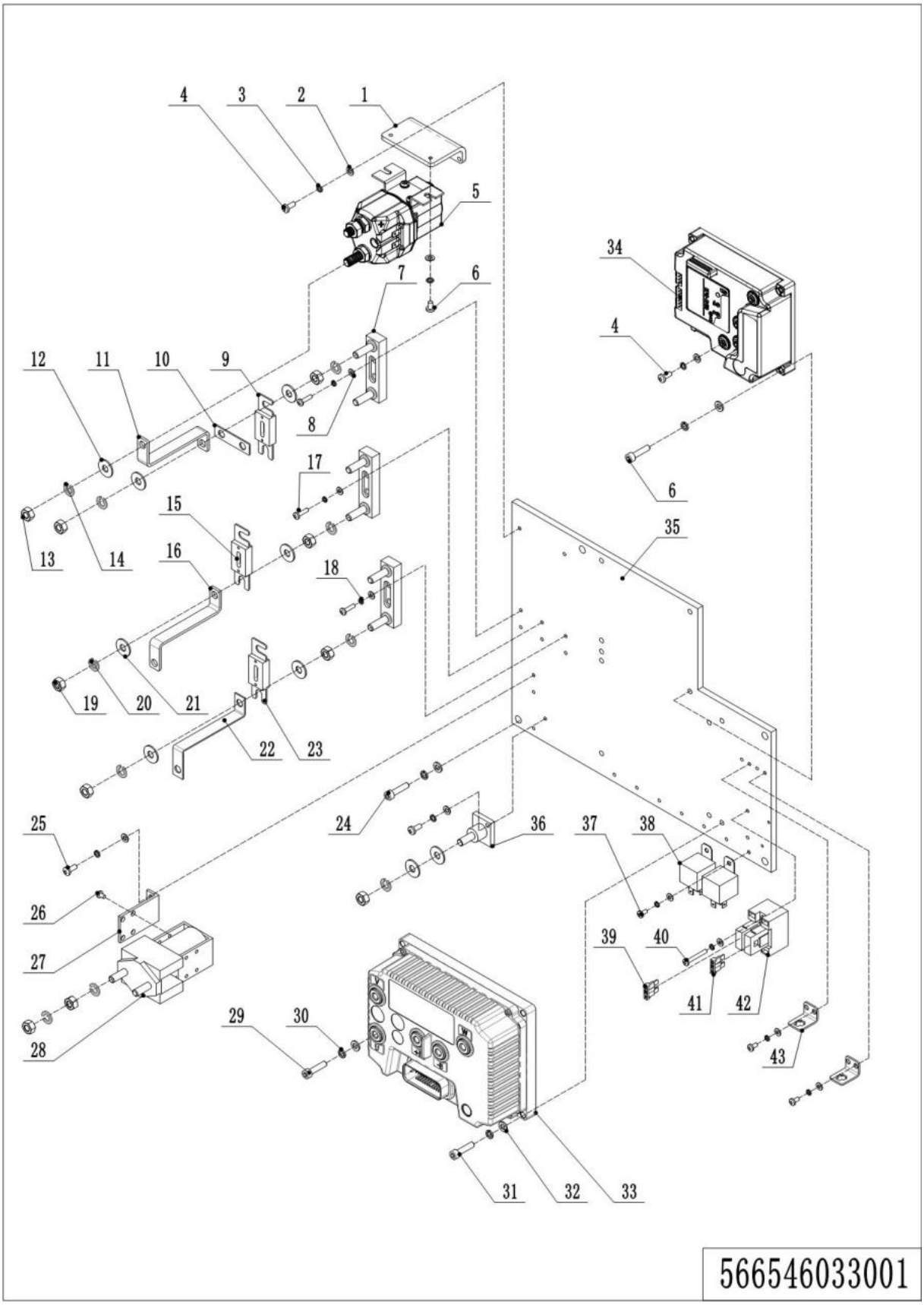

01 Electronic control components (566546033001)

No.	Item Code	Mark	Item Description	Qty.	Substitute	Note
1	921300400010		Holder	1		
2	910400100004	1	Flat Washer	8		
3	910400500004	1	Spring Washer	8		
4	910200500038	1	Screw	6		
5	920700100015		Contactor	1		
6	910200500036	1	Screw	2		
7	920100400002		Fuse Holder	2		
8	910400100003	1	Flat Washer	18		
9	920100100008		Fuse	1		
10	506233020004		Copper Busbar	1		
11	566533020002		Copper Busbar	1		
12	910400100007		Flat Washer	2		
13	910300100007	1	Nut	4		
14	910400500007	1	Spring Washer	4		
15	920100100013		Fuse	1		
16	506233020001		Copper Busbar	1		
17	910200500024	1	Screw	6		
18	910400500003	1	Spring Washer	18		
19	910300100006	1	Nut	16		
20	910400500006	1	Spring Washer	20		
21	910400100006	1	Flat Washer	20		
22	535933020004		Copper Busbar	1		
23	920100100001		Fuse	1		
24	910200200055		Screw	4		
25	910200500022		Screw	4		
26	910200500020		Screw	2		
27	921300400004		Holder	1		
28	920700100002		Contactor	1		
29	910200200039	1	Screw	5		
30	910400500005	1	Spring Washer	13		

01 Electronic control components (566546033001) (Continuation)

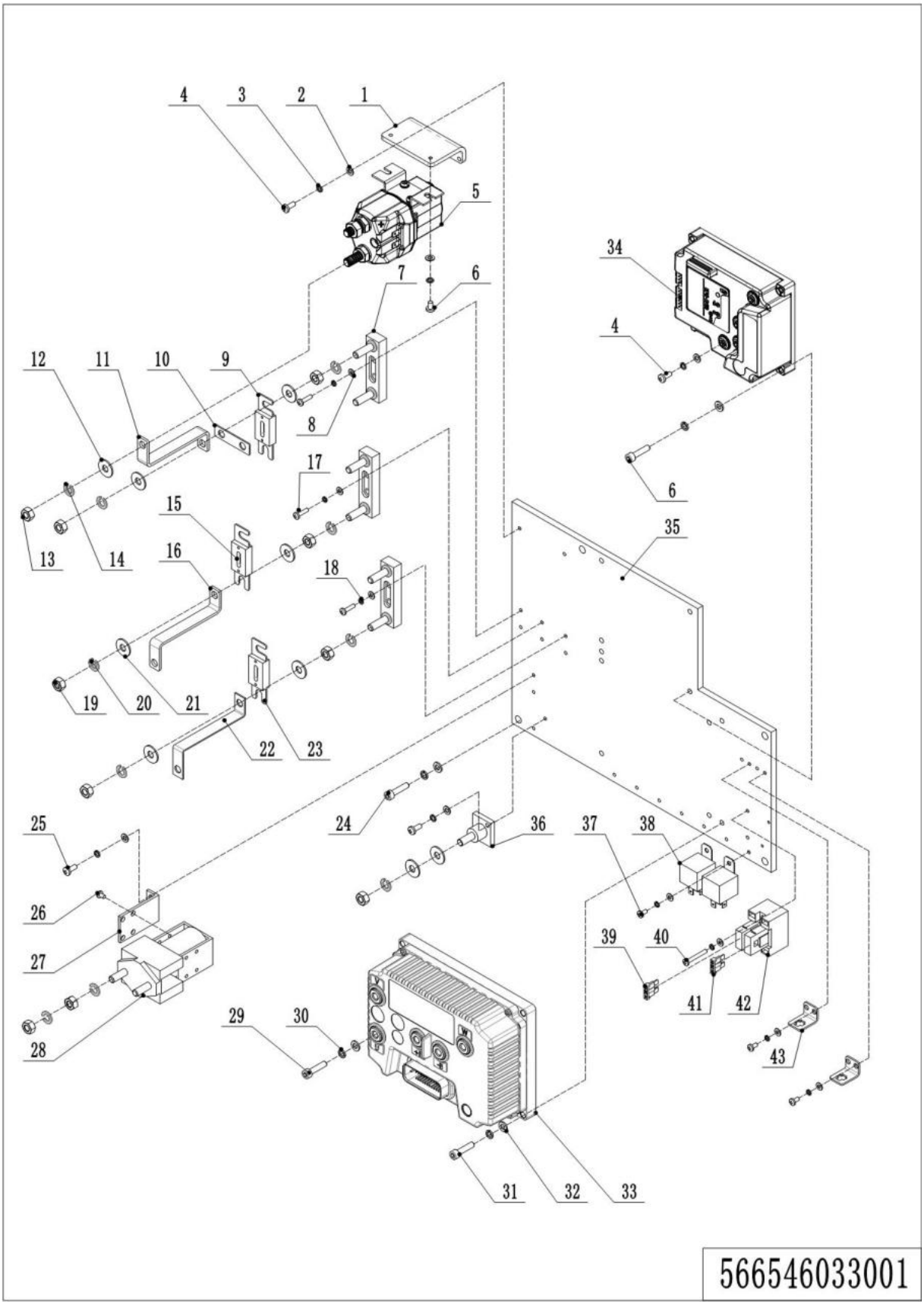

01 Electronic control components (566546033001)(Continuation)

No.	Item Code	Mark	Item Description	Qty.	Substitute	Note
31	910200200038	1	Screw	8		
32	910400100005	1	Flat Washer	13		
33	921400100026		Controller	1		
34	921400100030		Controller	1		
35	566533020001		Plate	1		
36	920100400001		Fuse Holder	1		
37	910200500034	1	Screw	2		
38	920800100011		Relay	2		
39	920100200003		Fuse	1		
40	910200500028		Screw	2		
41	920100200002		Fuse	1		
42	920100400005		Fuse Holder	1		
43	921300300002		Holder	2		

02 Wiring Harness (566546033002)

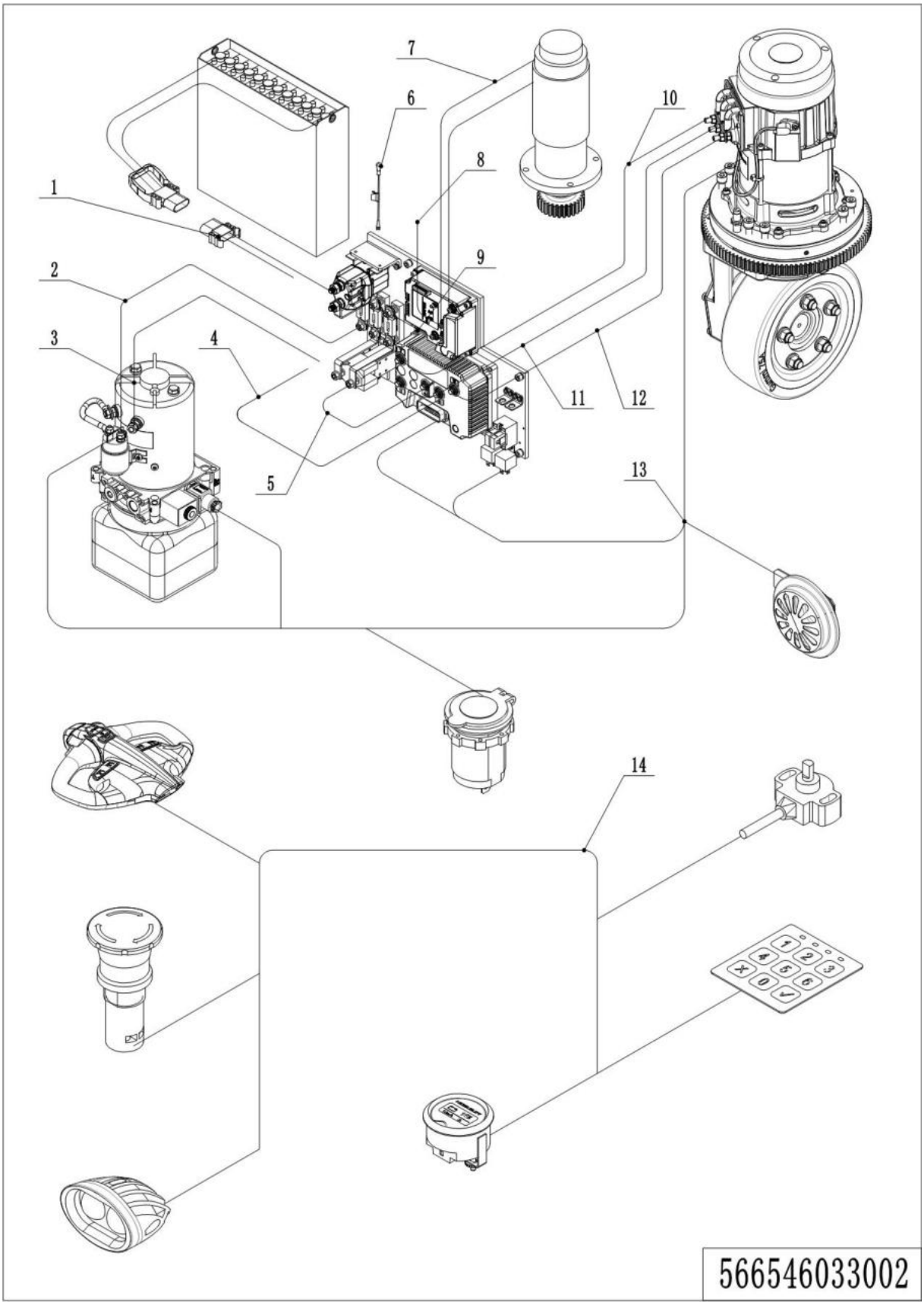

02 Wiring Harness (566546033002)

No.	Item Code	Mark	Item Description	Qty.	Substitute	Note
1	566533010012		Wire Harness	1		
1	566533010025		Wire Harness	1		For Li-battery
2	566533010010		Cable	1		
3	566533010011		Cable	1		
4	566533010009		Cable	1		
5	566533010017		Cable	1		
6	566533010016		Wire Harness	1		
7	566533010008		Wire Harness	1		
8	566533010014		Cables	1		
9	566533010013		Cables	1		
10	566533010006		Cable	1		
11	566533010005		Cable	1		
12	566533010007		Cable	1		
13	566533010022		Wiring Harness	1		
13	566533010000		Wire Harness	1		Platform lifting
14	566533010002		Wire Harness	1		Platform lifting
14	566533010027		Wire Harness	1		

03 Charger (566546036501)

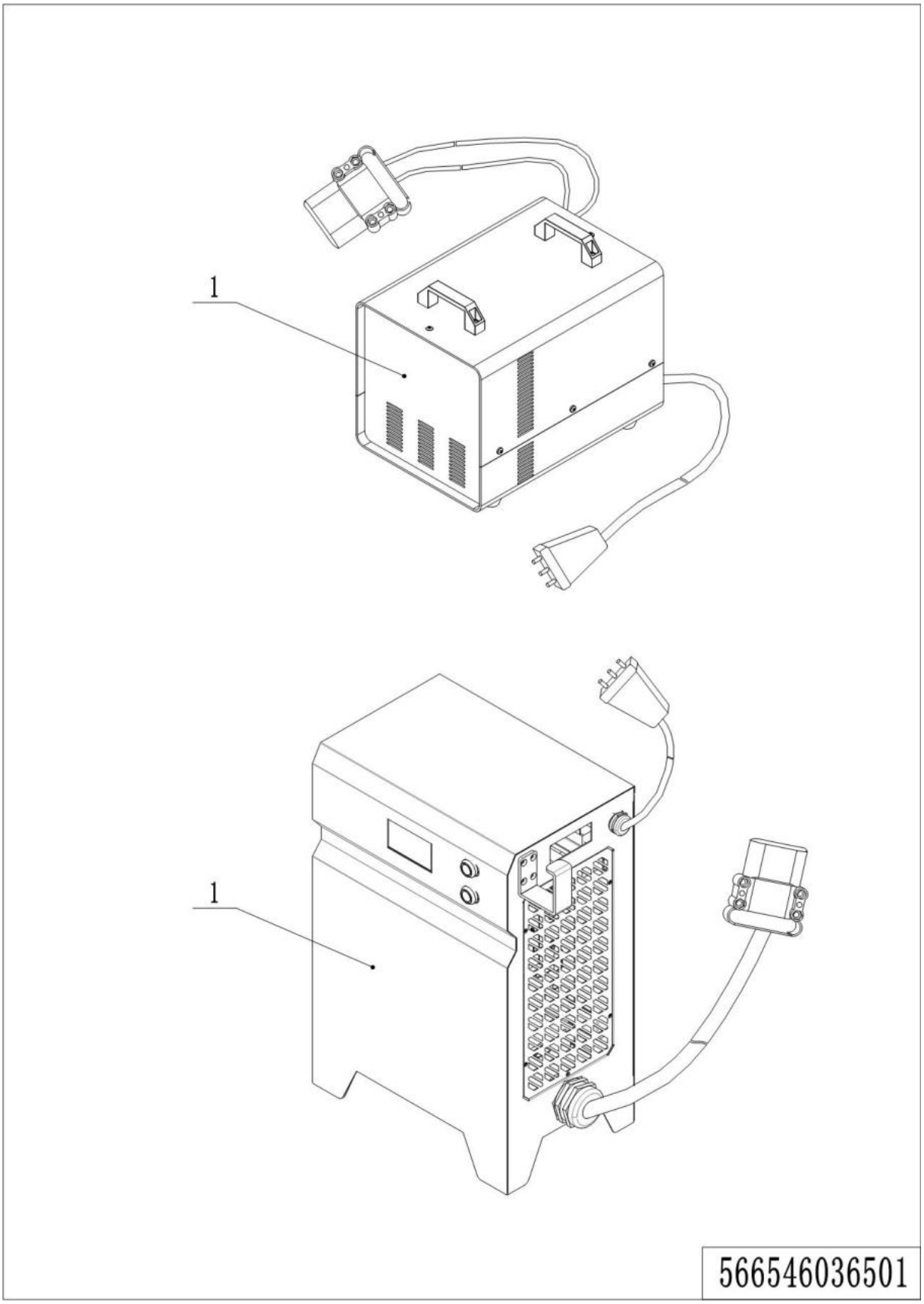

03 Charger (566546036501)

No.	Item Code	Mark	Item Description	Qty.	Substitute	Note
1	921000200073	2	Charger24V60A(Aisa-CHN)	1		
1	921000200074	2	Charger24V60A(Aisa-ENG)	1		
1	921000200075	2	Charger24V60A(EU)	1		
1	921000200076	2	Charger24V60A(ENG)	1		
1	921000200077	2	Charger24V60A(AUS)	1		
1	921000200078	2	Charger24V60A(USA)	1		
1	921000200483	2	Charger 24V150A	1		Overseas market
1	921000200437	2	Charger 24V150A	1		Domestic market

04 Traction Battery (566546037001)

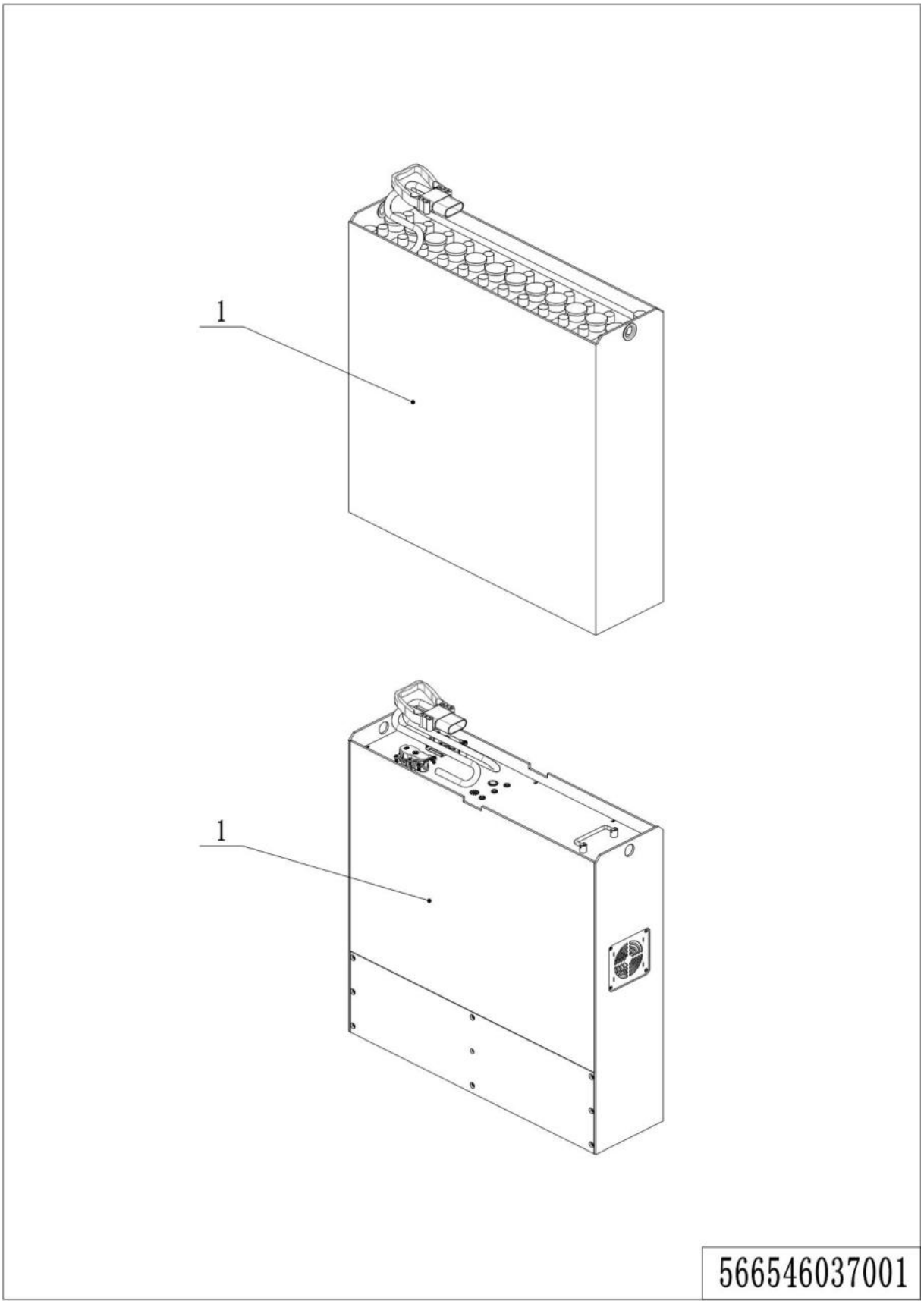

04 Traction Battery (566546037001)

No.	Item Code	Mark	Item Description	Qty.	Substitute	Note
1	566537010000	2	Battery	1		
1	920600100117	2	Li Battery24V300Ah	1		REMA Connector
1	920600100123	2	Li Battery24V350Ah	1		Charge gun

Chapter 6: Others

01 Labels and decals (US) (566846047003)

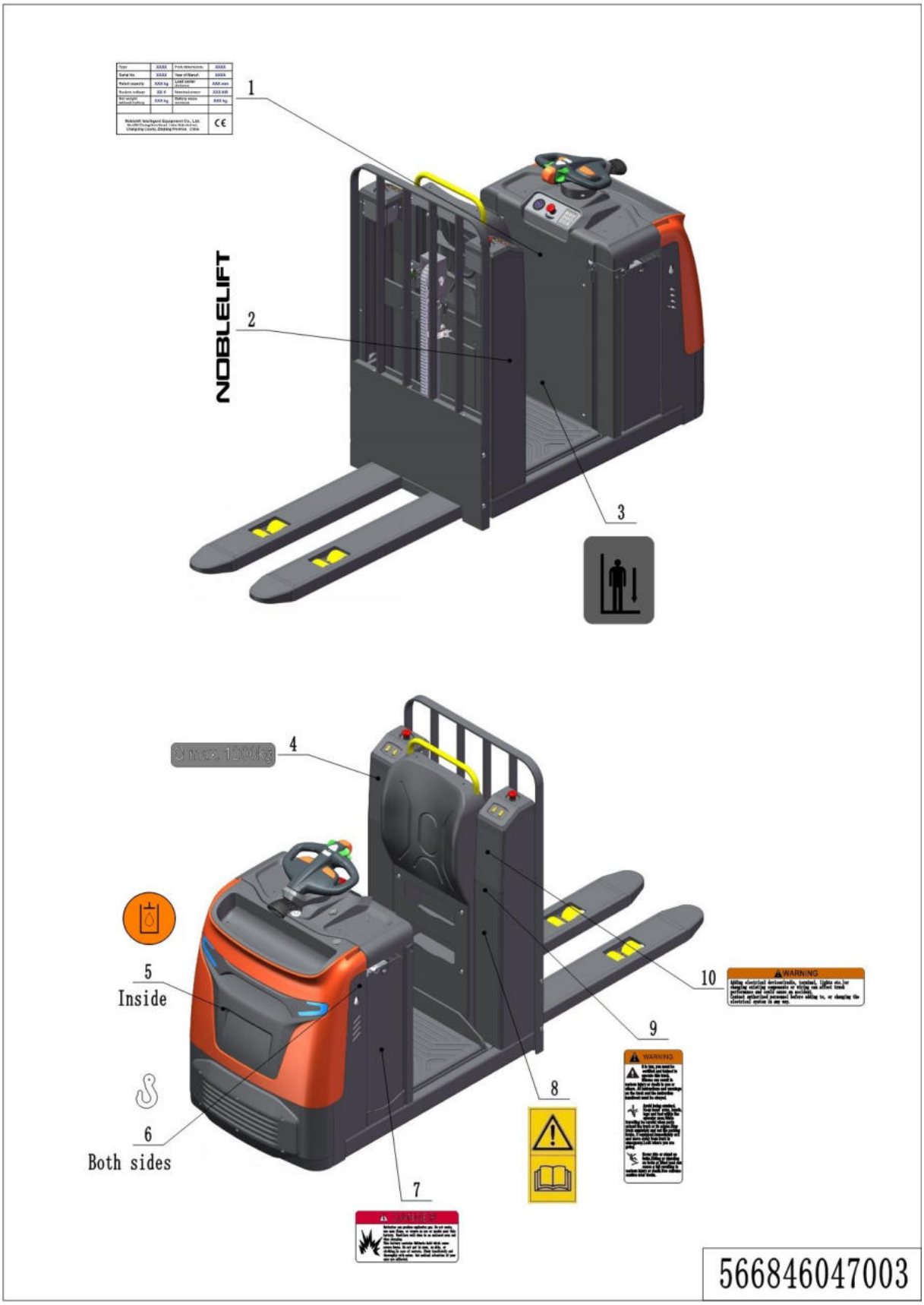

Labels and decals (US) (5668746047003)

No.	Item Code	Mark	Item Description	Qty.	Substitute	Note
1	566847520001		Truck data plate	1		
2	941200500001		Label	2		Optional
3	566547020000		Label	1		Optional
4	941200200019		Label	1		
5	941200300003		Label	1		
6	941200300001		Label	2		
7	941200100013		Label	1		
8	941200300002		Label	1		
9	941200100009		Label	1		
10	941200100010		Label	1		

02 Labels and decals (EU) (566846047004)

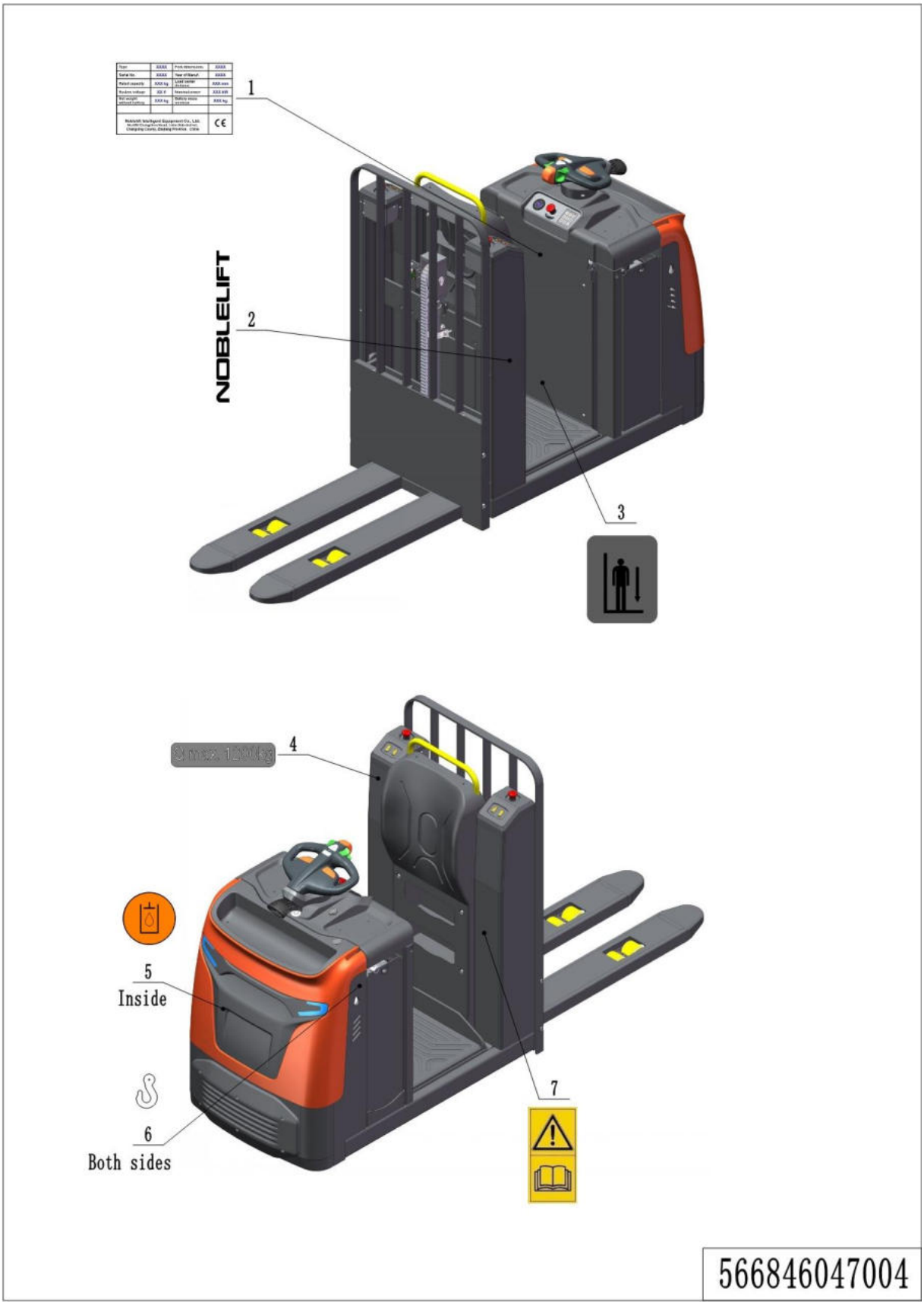

02 Labels and decals (EU) (566846047004)

No.	Item Code	Mark	Item Description	Qty.	Substitute	Note
1	566847520001		Truck data plate	1		
2	941200500001		Label	2		Optional
3	566547020000		Label	1		Optional
4	941200200019		Label	1		
5	941200300003		Label	1		
6	941200300001		Label	2		
7	941200300002		Label	1		

Appendix

01 Electrical Circuit Diagram - standard (566546045501)

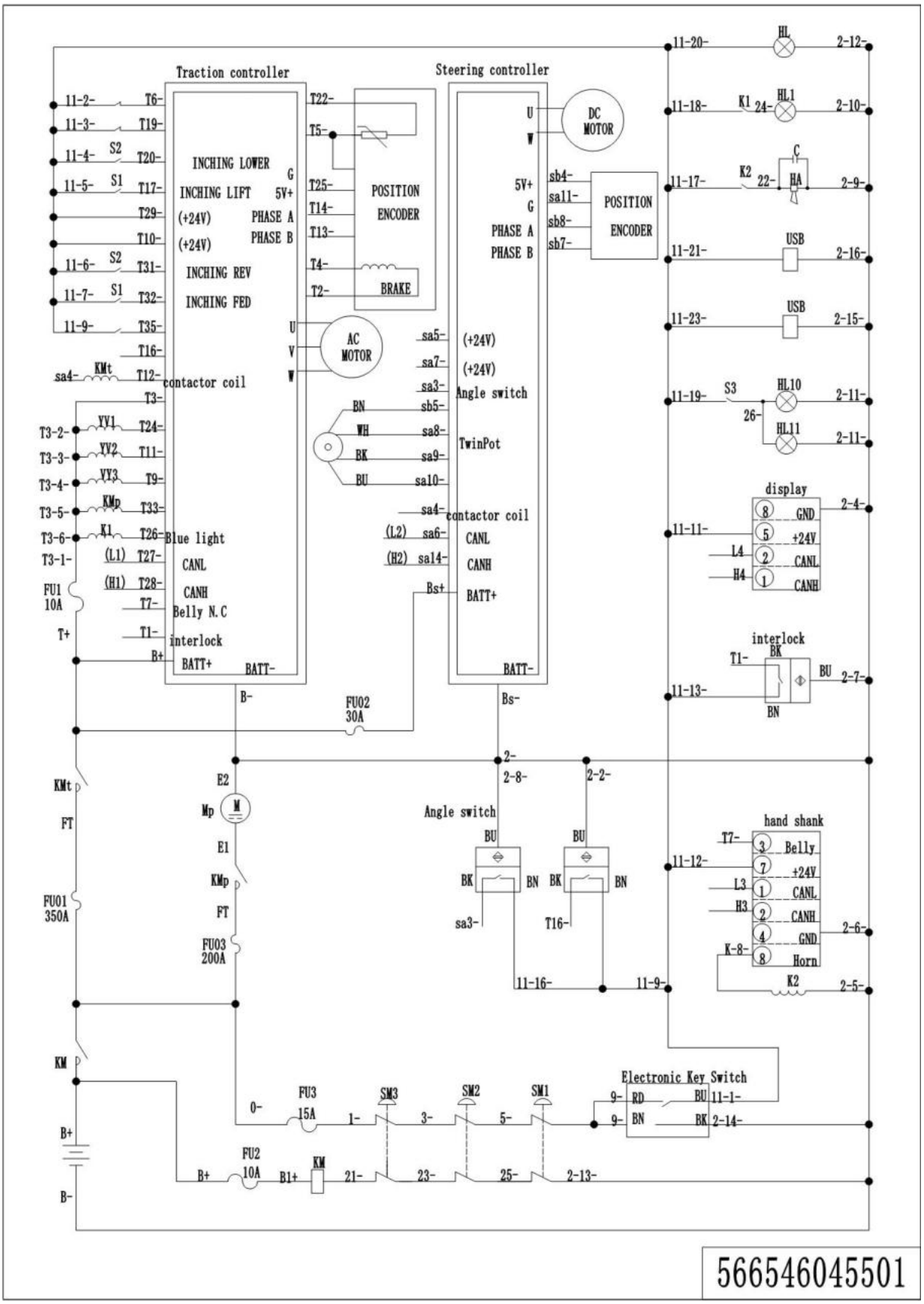

02 Electrical Circuit Diagram - optional (566546045502)

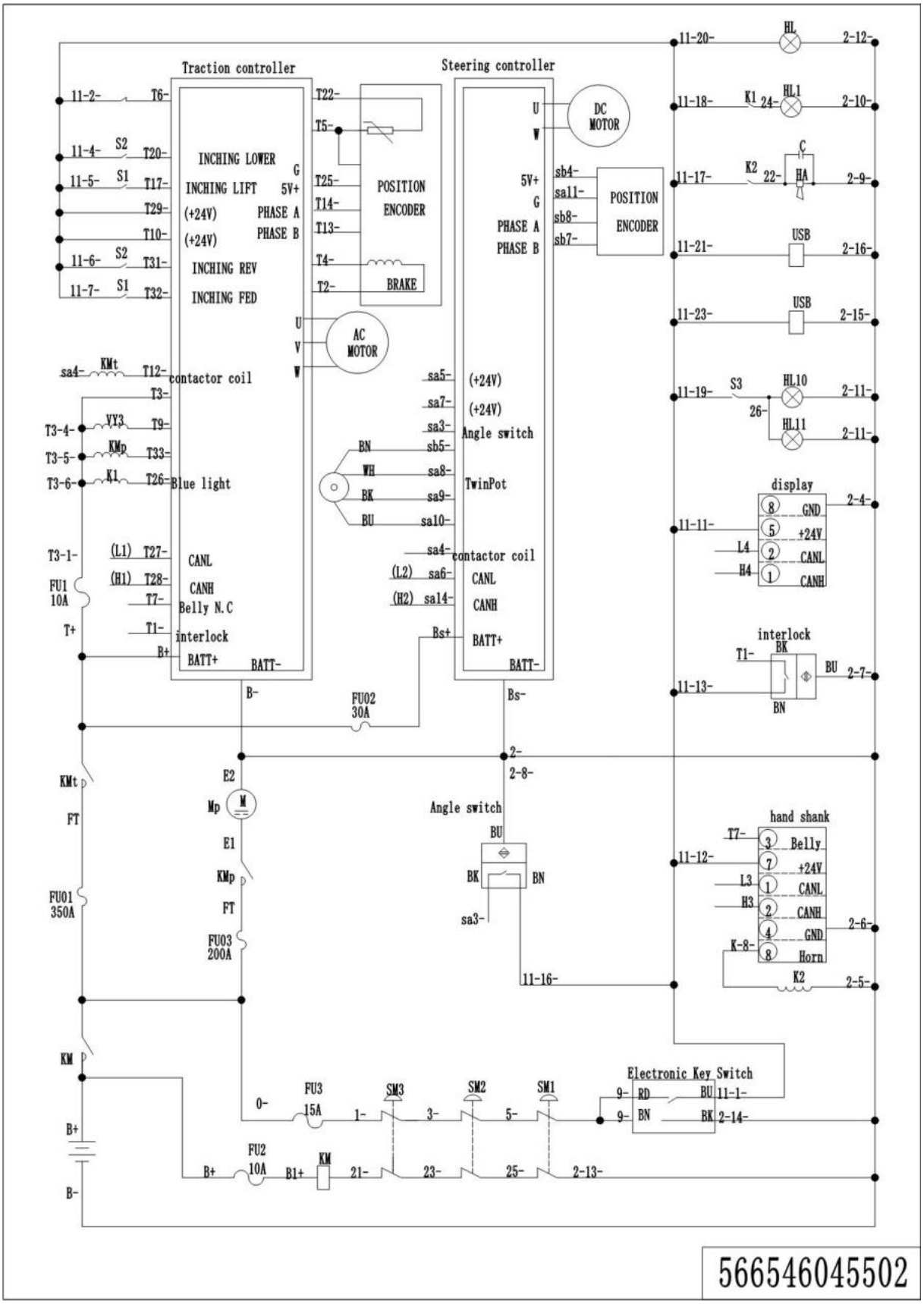

03 Hydraulic Circuit Diagram - standard (566546045505)

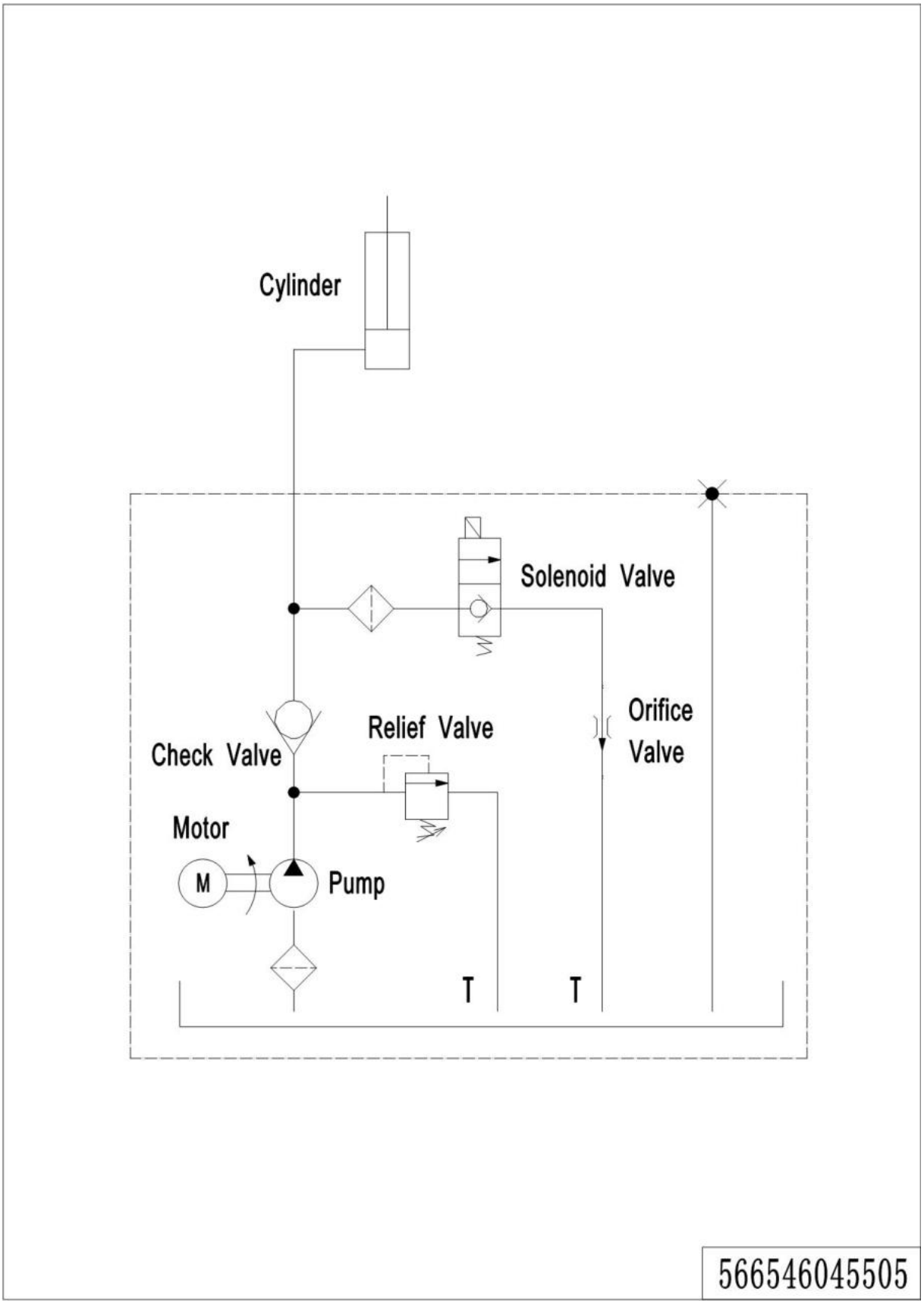

04 Hydraulic Circuit Diagram - optional (566546045506)

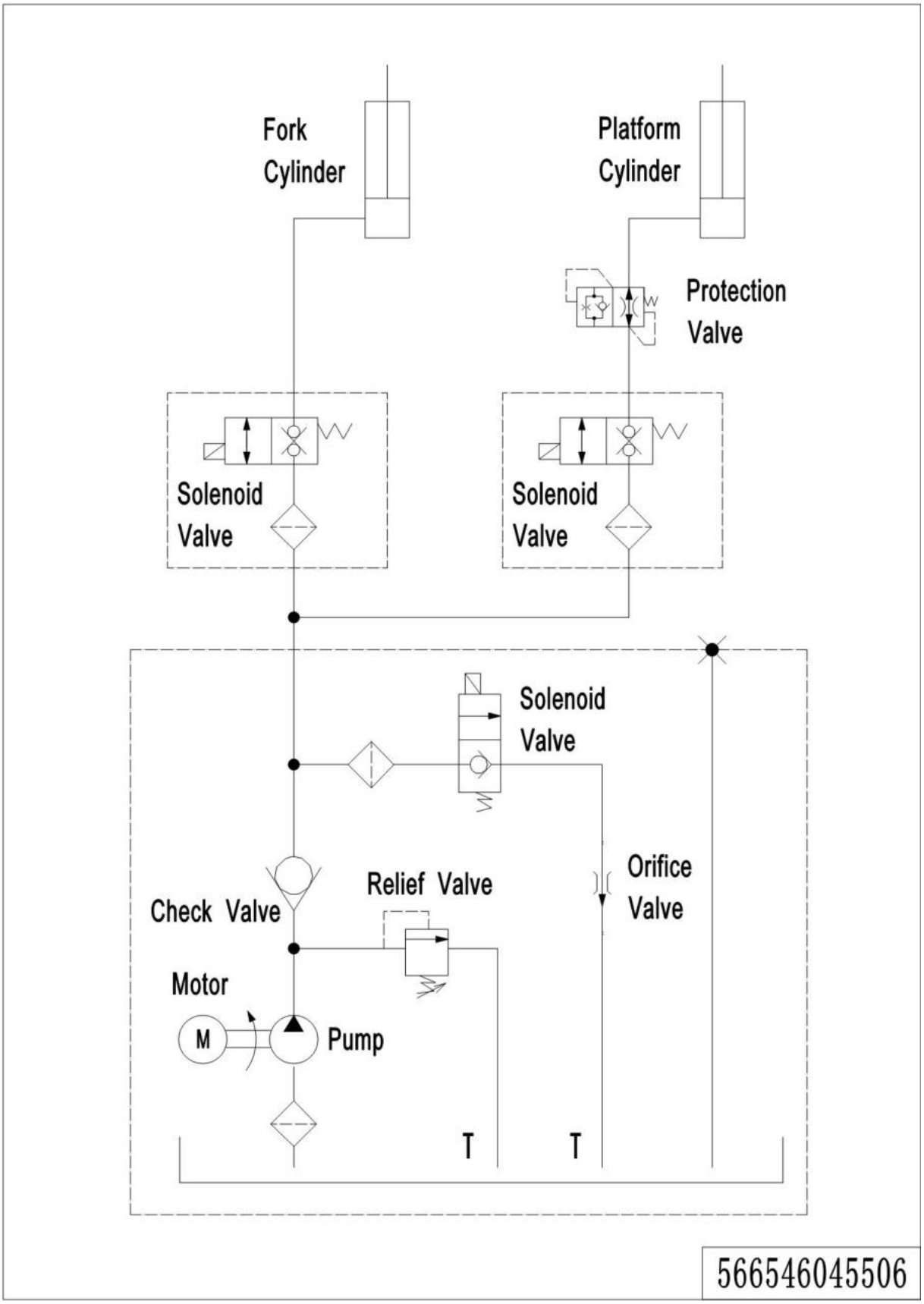

05 Consumable Parts List

No.	Item Code	Item Description	Qty.	Chapter/ Section/ Number
1	940300400002	Wheel Φ250x82	1	Chapter 1/01/07
2	951000100003	Hose Clamp	5	Chapter 2/01/07 Chapter 2/03/14
3	566824020000	Leaf Chain		Chapter 2/01/18 Chapter 2/03/36
4	566898510000	Seal Kit	1	Chapter 2/01/25 Chapter 2/03/37
5	566898510001	Seal Kit	1	Chapter 2/03/38
6	921900100006	Converter	1	Chapter 3/04/16 Chapter 4/01/32
6	920200300001	Microswitch	1	Chapter 3/01/34 Chapter 3/02/33
7	920200300001	Microswitch		Chapter 3/03/34
8	502311010001	Proximity Switch	1	Chapter 3/05/17 Chapter 3/06/36
9	940500200018	Bushing	2	Chapter 3/05/12 Chapter 3/06/03
10	566518020031	Spring	1	Chapter 3/05/11 Chapter 3/06/12
11	566518020032	Spring	1	Chapter 3/05/08 Chapter 3/06/09
12	566518020086	Buffer Pad	2	Chapter 3/05/06 Chapter 3/06/07
13	940400500004	Spring	2	Chapter 3/05/28 Chapter 3/06/32
14	566518020033	Crash Pad	2	Chapter 3/05/29 Chapter 3/06/33
15	566518020088	Shock Absorber	2	Chapter 3/05/24 Chapter 3/06/28
16	910700600002	Bearing	1	Chapter 3/07/08
17	910700700003	Bearing	1	Chapter 3/07/11
17	566898510002	Hose Protection	1	Chapter 3/01/22 Chapter 3/02/07
18	566898510002	Hose Protection		Chapter 3/03/07
19	566598510002	Wheel	1	Chapter 3/07/15
20	566898510003	Wheel	2	Chapter 3/05/10
21	911200100001	Oil Cup	2	Chapter 3/05/09
22	566518010011	Lock Catch	1	Chapter 4/01/33
23	566531520006	Spring	1	Chapter 4/01/14
24	566531520004	Sleeve	2	Chapter 4/01/13
25	566531520005	Bushing	1	Chapter 4/01/21
26	565931520005	Link Block	1	Chapter 4/01/11
27	565933510000	Potentiometer	1	Chapter 4/01/07
28	920100100008	Fuse	1	Chapter 4/01/09

1= Supply as package. 2= Supply with constraints. 3= Phasing-out supply. 4= Supply as assembly. 5= Check other tables.

05 Consumable Parts List (Continuation)

No.	Item Code	Item Description	Qty.	Chapter/ Section/ Number
29	920100100013	Fuse	1	Chapter 4/01/15
30	920100100001	Fuse	1	Chapter 4/01/23
31	920100200003	Fuse	1	Chapter 4/01/39
32	920100200002	Fuse	1	Chapter 4/01/41