Print Number:　　Print Date:

NOBLELIFT

Scan QR Code for More

Service Hotline: 836115

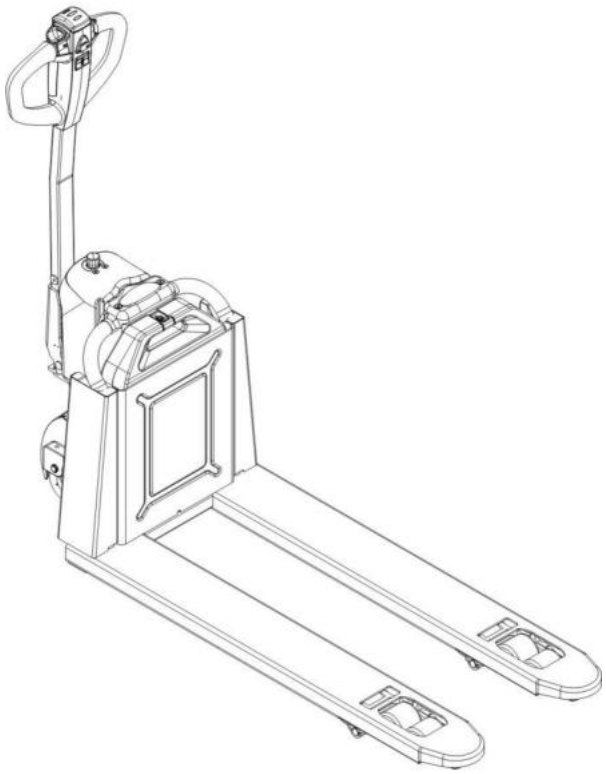

Electric Pallet Truck PTE15Q

PARTS MANUAL

509946020102

Version: V05

Truck Identification Number From:

Parts Manual

PTE15Q-PM05EN

Please order spare parts from authorized dealers of Noblelift Intelligent Equipment Co., LTD.

In order to avoid wrong delivery, all the orders for spare parts should specify the following items:

- Truck model, identification number and manufacture year.
- Orders for spare parts of mast, hydraulic transmission unit, steering axle, motor, etc. shall indicate the manufacture number of these parts.
- Codes for Noblelift spare parts are shown in the table of parts manual. Please also pay attention to the description of supply status, order quantity, etc. (check the number listed in "Mark" column of the parts manual).

"Mark" Column:

The unmarked indicates the parts are in short supply cycle.

Number 1: supply as package. Indicating these that parts are small parts and seal parts, which are supplied in package unit and in short supply cycle.

Number 2: supply with constraints. Indicating that these spare parts are not in stock and will be prepared for production after receiving the order from customers, which are in long supply cycle.

Number 3: phasing-out supply. Indicating that these parts will be replaced by new parts due to technical improvements and the current stock will not be available when these parts run out. Please check the description of technical improvements notice.

Number 4: supply as assembly. Indicating that these parts are assembly parts defined by manufacture process, which cannot be supplied as a single part.

Number 5: check other tables.

This parts manual is the property of Noblelift and can be shared under the confidential agreement only, Noblelift has the right to claim for compensation of any unauthorized use. Copy without permission is not allowed. Figures in the manual are not limited by the original design. Noblelift Intelligent Equipment Co., LTD reserves the right to improve the products for continuous technology progress.

Table of Contents

Chapter 1: Drive System 1
01 Drive Unit Steering(15Q)(509946013501) 1
02 Drive Assembly(15Q)(509946013002) 3
03 Drive Assembly(15Q)(509946013004) 5
Chapter 2: Hydraulic System 7
01 Hydraulic Components(15Q)(509946023501) 7
02 Hydraulic Components (EN1175-2020) (509946038510) 9
Chapter 3: Truck Frame 11
01 Truck Frame (509946038503) 11
02 Truck Frame (509946038504) 13
02 Truck Frame (509946038504) Continuation 15
Chapter 4: Steering System, Braking System, Wheels 17
01 Tiller Unit(509946011003) 17
02 Tiller(509946011004) 19
03 Tiller(509946011012) 21
04 Load Wheel (Tandem)(509946017001) 23
05 Caster (509946016501) 25
06 Caster (509946016502) 27
Chapter 5: Electrical Parts 29
01 Wire Harness (509946033005) 29
02 Wire Harness (509946033011) 31
03 Electronic components (509946033006) 33
04 Electronic components (509946033012) 35
05 Charger (509946036501) 37
05 Charger (509946036501) Continuation 39
06 Traction Battery (509946037002) 41
Chapter 6: Others 43
01 Labels and Decals-EU (509946047001) 43
02 Labels and Decals-US (509946047002) 45
Appendix 47
01 Electrical Circuit Diagram (509946045504) 47
02 Electrical Circuit Diagram (509946045505) 48
03 Hydraulic Circuit Diagram (508046045502) 49
04 Consumable Parts List 50

Chapter 1: Drive System

01 Drive Unit Steering(15Q)(509946013501)

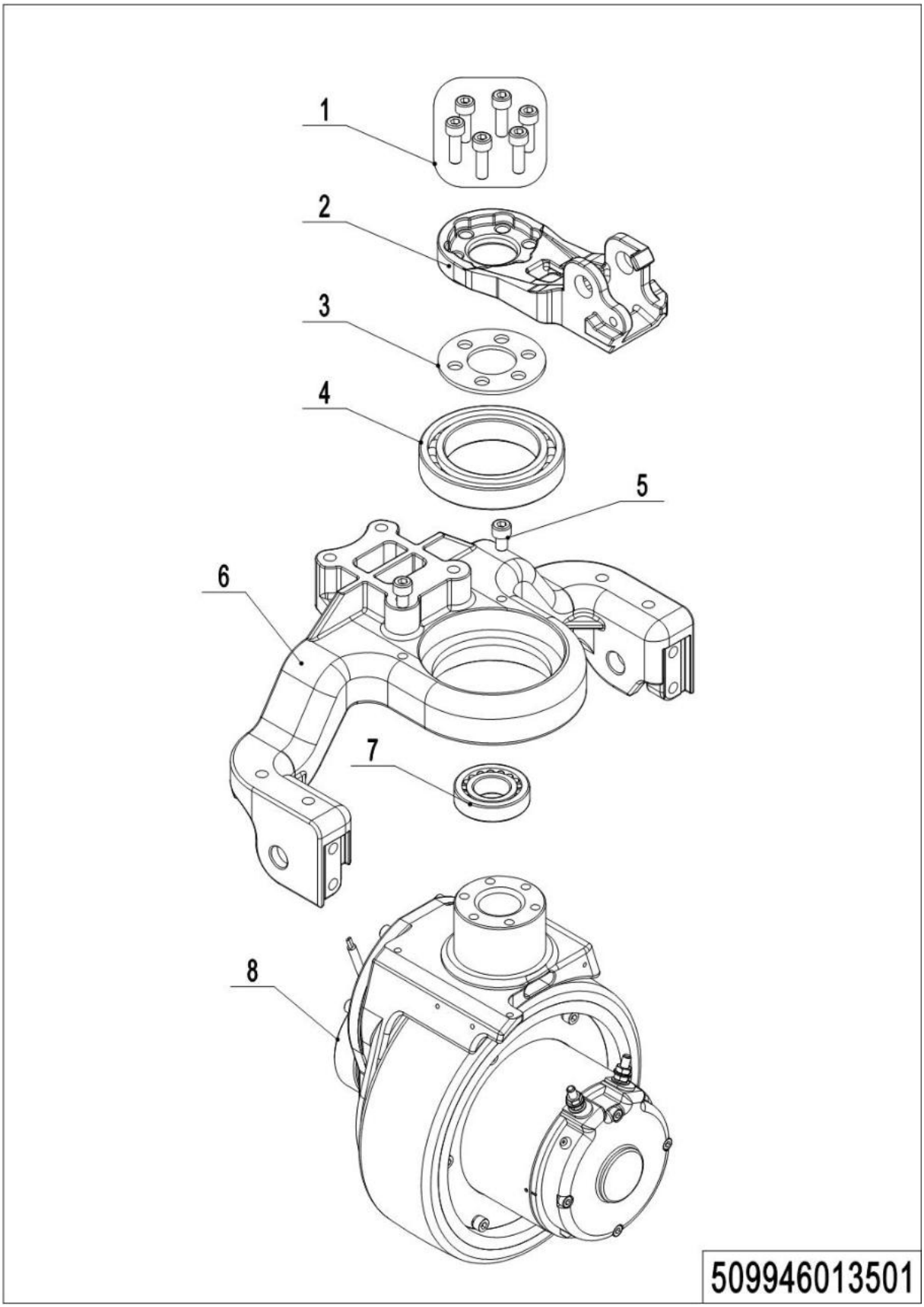

1= Supply as package. 2= Supply with constraints. 3= Phasing-out supply. 4= Supply as assembly. 5= Check other tables.

01 Drive Unit Steering(15Q)(509946013501)

No.	Item Code	Mark	Item Description	Qty.	Substitute	Note
1	910200200058	1	Screw	6		
2	509913520004		Flange	1		
3	509913520002		Subplate	1		
4	910700200058		Bearing	1		
5	910200200074	1	Screw	2		
6	509913520006		Wheel Mount	1		
7	910700600044		Bearing	1		
8	940900100029	2	Drive Unit	1		220
8	940900100062		Drive Unit	1		210

02 Drive Assembly(15Q)(509946013002)

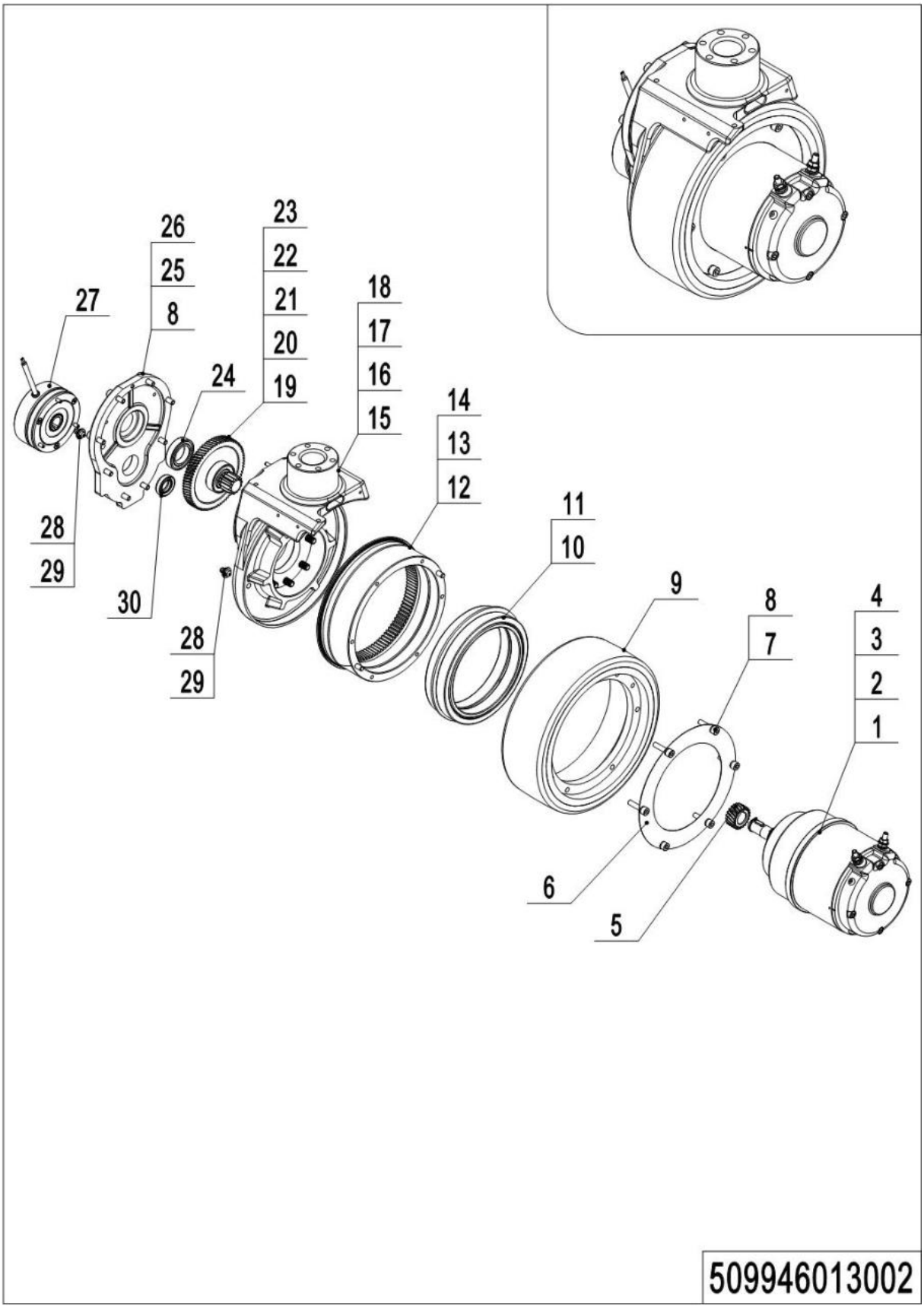

1= Supply as package. 2= Supply with constraints. 3= Phasing-out supply. 4= Supply as assembly. 5= Check other tables.

02 Drive Assembly (15Q) (509946013002)

No.	Item Code	Mark	Item Description	Qty.	Substitute	Note
1	961002200003	2	Motor	1		
2	910600800005		Flat Key	2		
3	910401300006		Circlip	1		
4	910401300007		Circlip	1		
5	961000700006		Gear	1		
6	961001300009		Scraper Seal	1		
7	910200200140	1	Screw	6		
8	910400500018	1	Spring Washer	14		
9	961001300010		Wheel	1		
10	910700200044		Bearing	2		
11	910401400023		Circlip	1		
12	961001300008		Gear	1		
13	910600100013		Cylindrical Pin	2		
14	961001300007		Oil Seal	1		
15	961002200001	2	Gearbox	1		
16	910200200147	1	Screw	5		
17	910400500019	1	Spring Washer	5		
18	910600100003		Cylindrical Pin	1		
19	961001300002		Gear	1		
20	961001300005		Gear Shaft	1		
21	910600800006		Flat Key	1		
22	910700200057		Bearing	1		
23	910401300008		Circlip	1		
24	910700200046		Bearing	1		
25	961002200002		Cover	1		
26	910200200139	1	Screw	8		
27	961002200004		Brake	1		
28	911200100003		Oil Cup	2		
29	910800900010		Bonded Washer	2		
30	961000700012		Oil Seal	1		

1= Supply as package. 2= Supply with constraints. 3= Phasing-out supply. 4= Supply as assembly. 5= Check other tables.

03 Drive Assembly(15Q)(509946013004)

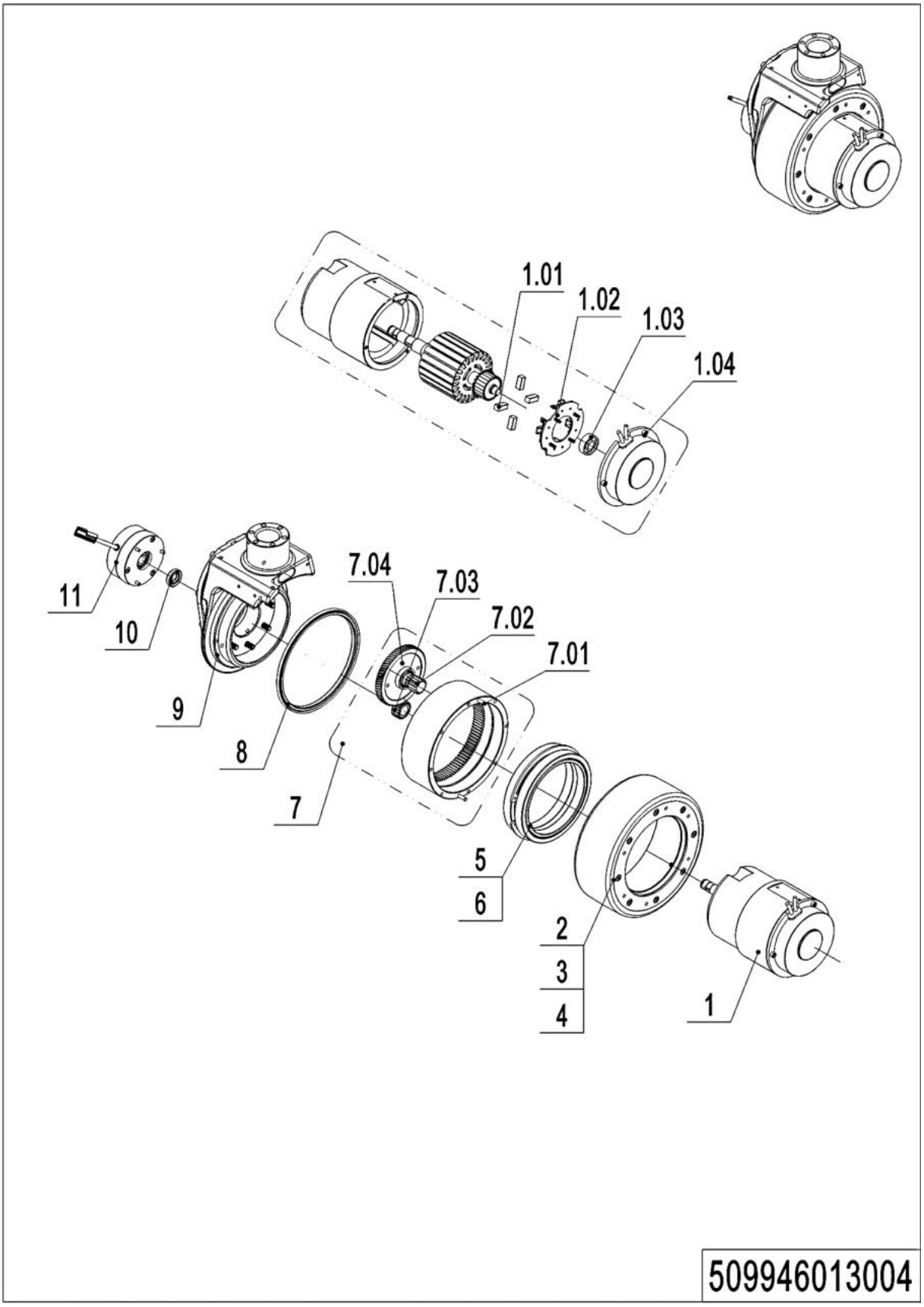

1= Supply as package. 2= Supply with constraints. 3= Phasing-out supply. 4= Supply as assembly. 5= Check other tables.

03 Drive Assembly(15Q)(509946013002)

No.	Item Code	Mark	Item Description	Qty.	Substitute	Note
1	961004000012		Motor	1		
1.01	507798520023		Carbon brush	4		
1.02	507798520024		Holde	1		
1.03	507798520021		Bearing	1		
1.04	507798520022		Cover	1		
2	961004000009		Wheel	1		
3	961004000011		Oil Seal	1		
4	910200200202		Screw	8		
5	910700200044		Bearing	2		
6	961004000007		Sleeve	1		
7	507798510006		Gear	1		
7.01	961004000006		Gear	1		
7.02	961004000003		Gear Shaft	1		
7.03	961004000002		Gear	1		
7.04	961004000005		Gear	1		
8	961004000010		Oil Seal	1		
9	509998510051		Gearbox	1		
10	961000700012		Oil Seal	1		
11	961002200004		Brake	1		

Chapter 2: Hydraulic System

01 Hydraulic Components(15Q)(509946023501)

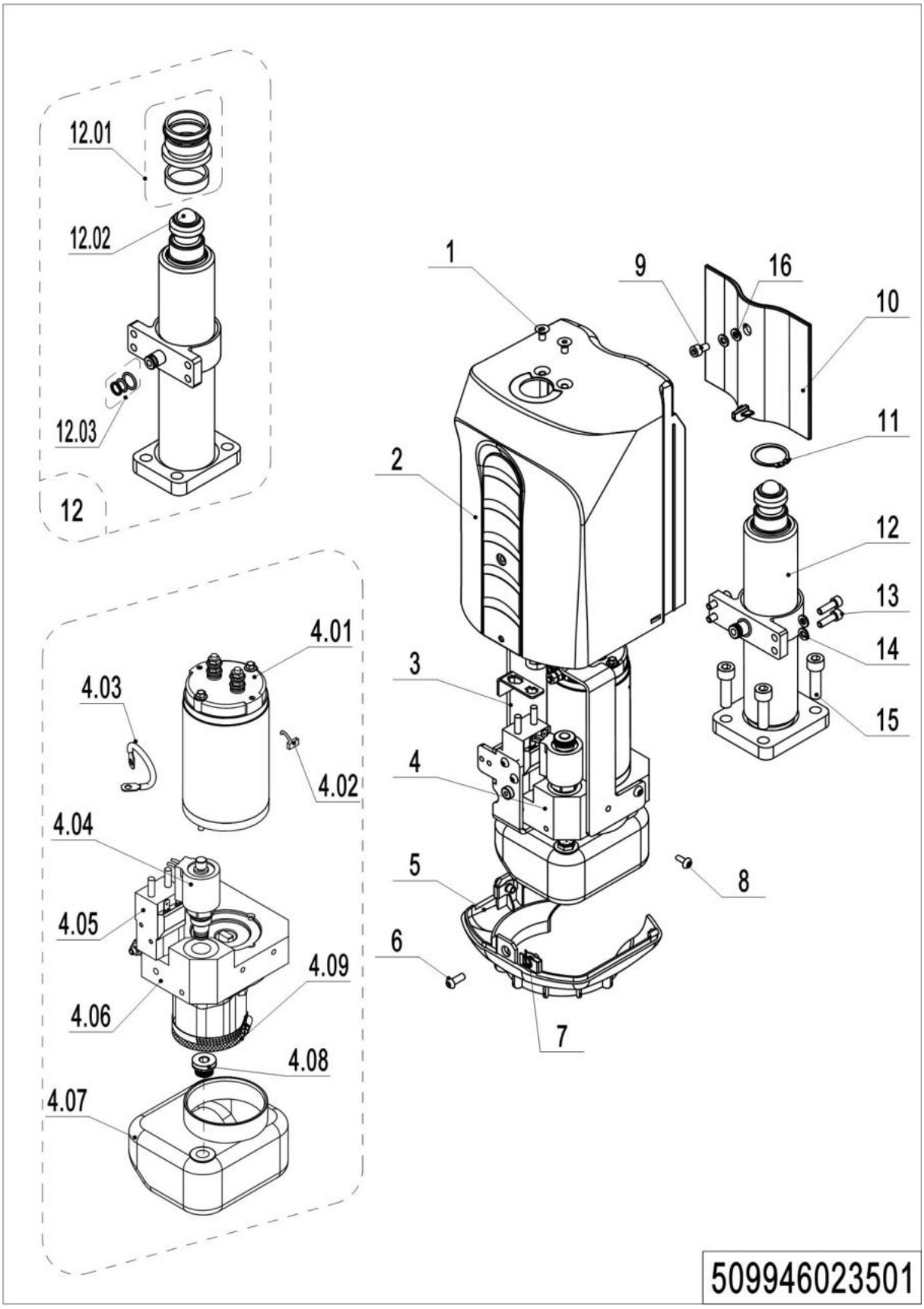

01 Hydraulic Components(15Q)(509946023501)

No.	Item Code	Mark	Item Description	Qty.	Substitute	Note
1	910200400015	1	Screw	2		
2	509924020101		Cover	1		
3	509924010004		Mounting Rack	1		
4	950900100090	2	Pump Unit	1		
4.01	509998510002	2	Motor	1		
4.02	508098520008	2	Brush	1		
4.03	508098520007	2	Cables	1		
4.04	509998510003	2	Magnetic Valve	1		
4.05	508098510021	2	Switch	1		
4.06	508598510008	2	Gear Pump	1		
4.07	508598510010	2	Tank	1		
4.08	508598510009	2	Cap-Tank	1		
4.09	508598520005	2	Filter	1		
5	509924020102		Shield	1		
6	910200300017	1	Screw	2		
7	940400400005	1	Cage Nut	2		
8	910200300018	1	Screw	3		
9	910200200176	1	Screw	1		black
10	509924020103		Cover	1		
11	910401300017		Circlip	1		
12	509924010000		Cylinder	1		
12.01	508098510018		Seal Kit	1		
12.02	910701100019		Steel Ball	1		
12.03	508598510004		Seal Kit	1		
13	910200200036	1	Screw	4		
14	910400100005	1	Flat Washer	4		
15	910200200075	1	Screw	4		
16	910400500005	1	Spring Washer	2		

02 Hydraulic Components (EN1175-2020) (509946038510)

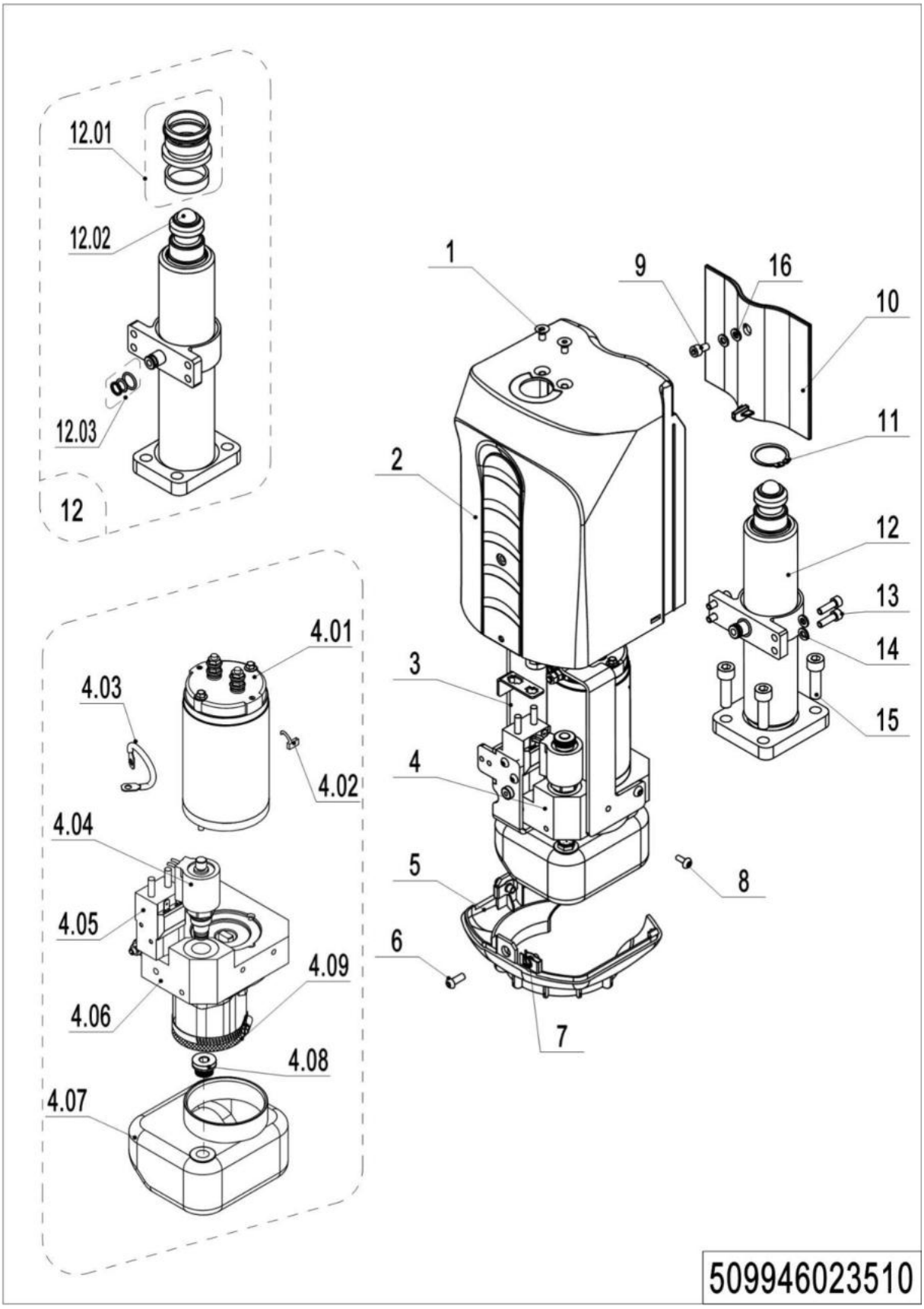

02 Hydraulic Components(EN1175-2020)(509946023510)

No.	Item Code	Mark	Item Description	Qty.	Substitute	Note
1	910200400015	1	Screw	2		
2	509924020101		Cover	1		
3	509924010006		Mounting Rack	1		
4	950900100090	2	Pump Unit	1		
4.01	509998510002	2	Motor	1		
4.02	508098520008	2	Brush	1		
4.03	508098520007	2	Cables	1		
4.04	509998510003	2	Magnetic Valve	1		
4.05	508098510021	2	Switch	1		
4.06	508598510008	2	Gear Pump	1		
4.07	508598510010	2	Tank	1		
4.08	508598510009	2	Cap-Tank	1		
4.09	508598520005	2	Filter	1		
5	509924020102		Shield	1		
6	910200300017	1	Screw	2		
7	940400400005	1	Cage Nut	2		
8	910200300018	1	Screw	3		
9	910200200176	1	Screw	1		black
10	509924020103		Cover	1		
11	910401300017		Circlip	1		
12	509924010000		Cylinder	1		
12.01	508098510018		Seal Kit	1		
12.02	910701100019		Steel Ball	1		
12.03	508598510004		Seal Kit	1		
13	910200200036	1	Screw	4		
14	910400100005	1	Flat Washer	4		
15	910200200075	1	Screw	4		
16	910400500005	1	Spring Washer	2		

Chapter 3: Truck Frame

01 Truck Frame (509946038503)

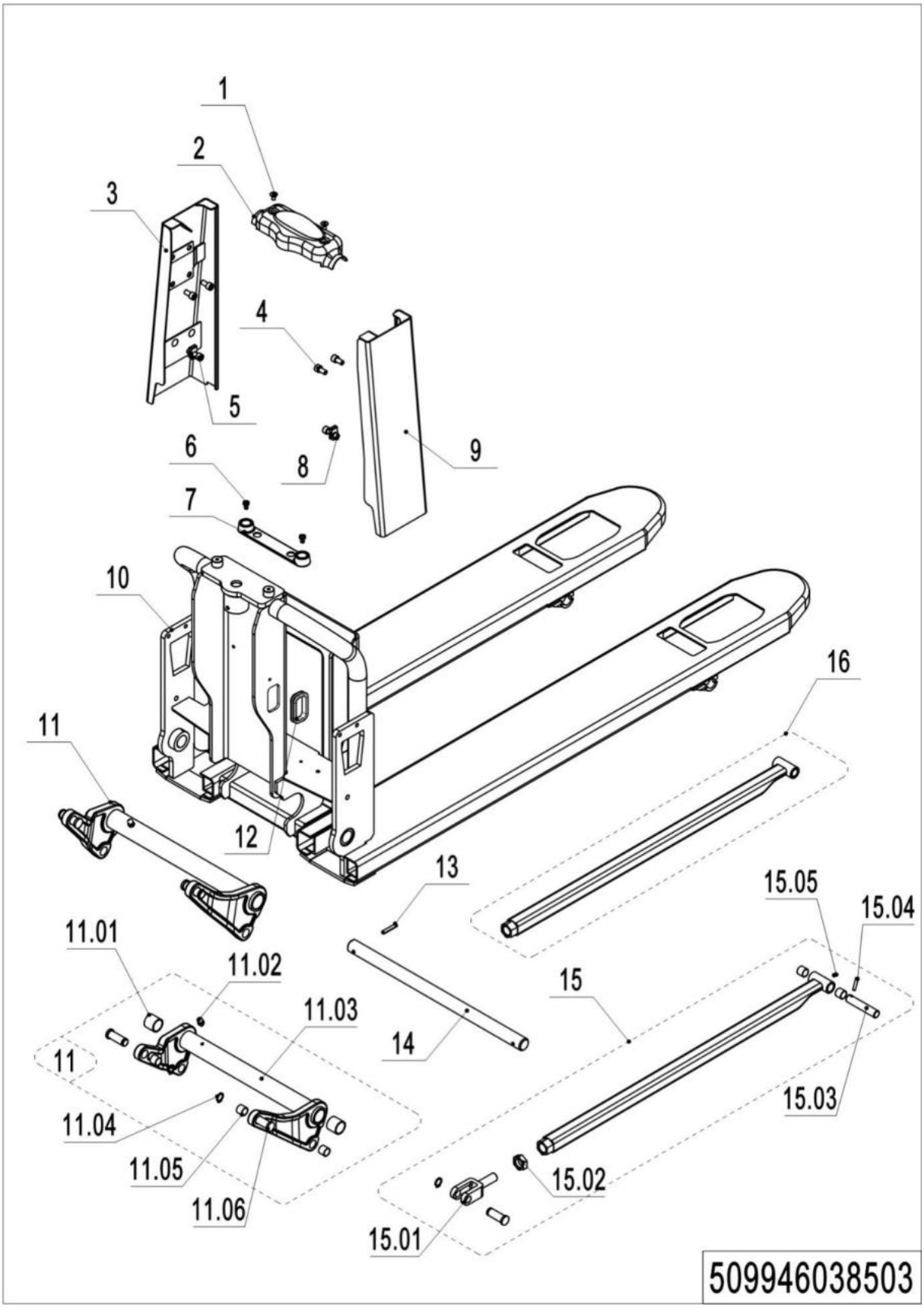

01 Truck Frame (509946038503)

No.	Item Code	Mark	Item Description	Qty.	Substitute	Note
1	910200400015	1	Screw	2		
2	509938520100		Cover	1		
3	509938510011		Side Plate2	1		
4	910200200156	1	Screw	4		
5	910200200157	1	Screw	2		
6	910200500034	1	Screw	2		
7	509938520009		Battery Rack	1		
8	940400400002	1	Cage Nut	2		
9	509938510010		Side Plate1	1		
10	509938510000	2	Chassis(540x1150)	1		
10	509938510004	2	Chassis(540x1220)	1		
11	509998510029		Rise Arm	1		
11.01	940500100097		Bushing	2		
11.02	911200100002		Oil Cup	1		
11.03	509938510016		Rise Arm(540)	1		
11.04	910401300007		Circlip	4		
11.05	940500100083		Bushing	8		
11.06	502338520026		Pin	4		
12	509938520041		Jacket	1		
13	910600400041		Spring Pin	1		
14	508038520027		Axle	1		
15	509998510030		Push Rod Kit(1150)	2		
15	509998510031		Push Rod Kit(1220)	2		
15.01	502338520027		Push Rod Fork	2		
15.02	910300400008	1	Nut	2		
15.03	502338520030		Axle	2		
15.04	910600500002		Spring Pin	2		
15.05	911200100001		Oil Cup	2		
16	509938510002		Push Rod (1150)	2		
16	509938510003		Push Rod (1220)	2		

02 Truck Frame (509946038504)

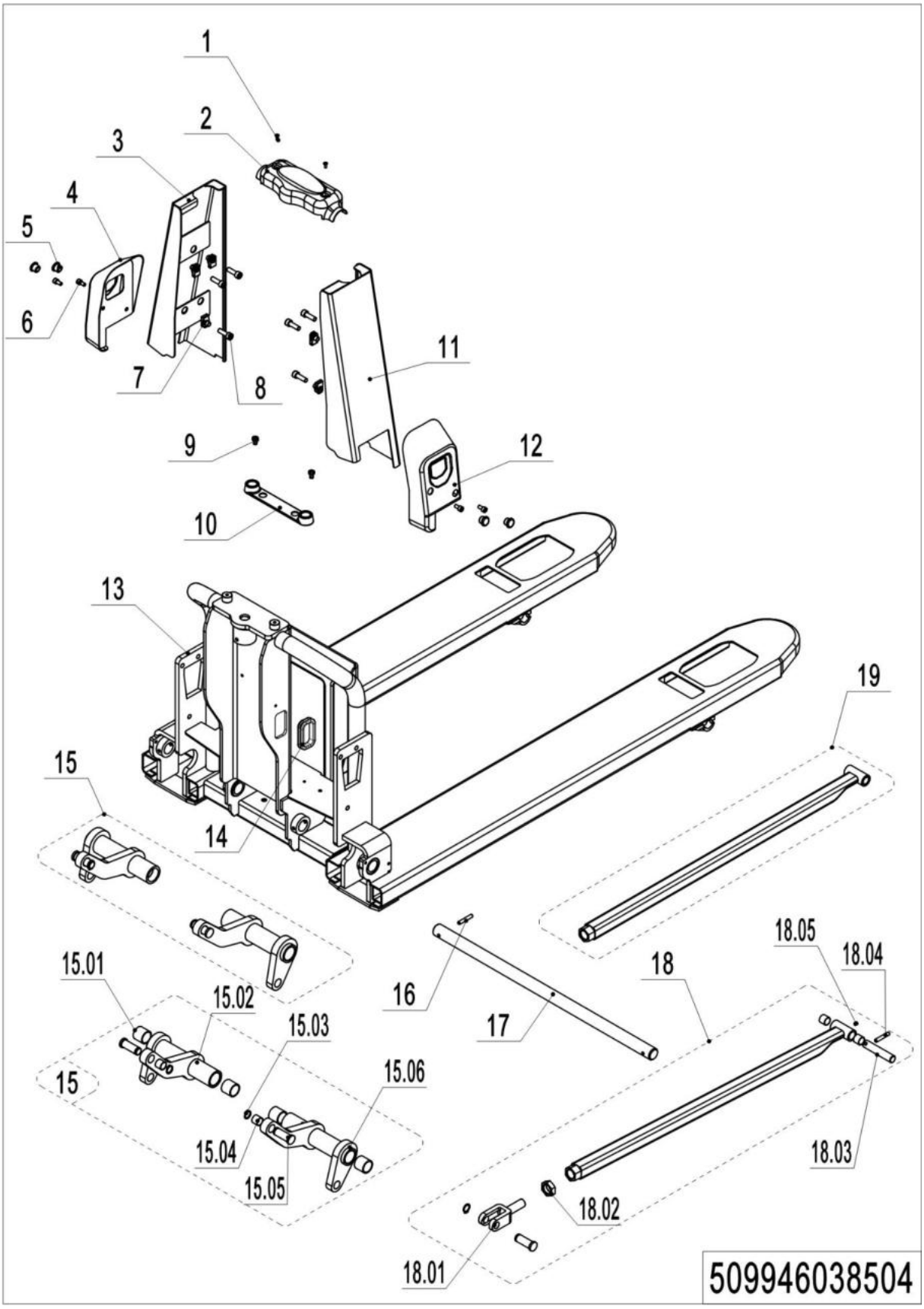

02 Truck Frame (509946038504)

No.	Item Code	Mark	Item Description	Qty.	Substitute	Note
1	910200400015	1	Screw	2		
2	509938520100		Cover	1		
3	509938510013		Side Plate2	1		
4	509938510104		Side Cover(left 685)	1		
5	509938520103		Rubber Cover	4		
6	910200200033	1	Screw	4		
7	940400400002	1	Cage Nut	6		
8	910200200157	1	Screw	6		
9	910200500034	1	Screw	2		
10	509938520009		Battery Rack	1		
11	509938510012		Side Plate1	1		
12	509938510105		Side Cover(right 685)	1		
13	509938510001	2	Chassis(685x1150)	1		
13	509938510005	2	Chassis(685x1220)	1		
14	509938520041		Jacket	1		
15	509998510000		Rise Arm	1		
15.01	940500100097		Bushing	2		
15.02	509938510014		Rise Arm	1		
15.03	910401300007		Circlip	4		
15.04	940500100083		Bushing	8		
15.05	502338520026		Pin	4		
15.06	509938510015		Rise Arm	1		
16	910600400041		Spring Pin	1		
17	509938520033		Axle	1		
18	509998510030		Push Rod Kit(1150)	2		
18	509998510031		Push Rod Kit(1220)	2		
18.01	502338520027		Push Rod Fork	2		
18.02	910300400008	1	Nut	2		
18.03	502338520030		Axle	2		
18.04	910600500002		Spring Pin	2		
18.05	911200100001		Oil Cup	2		

02 Truck Frame (509946038504) Continuation

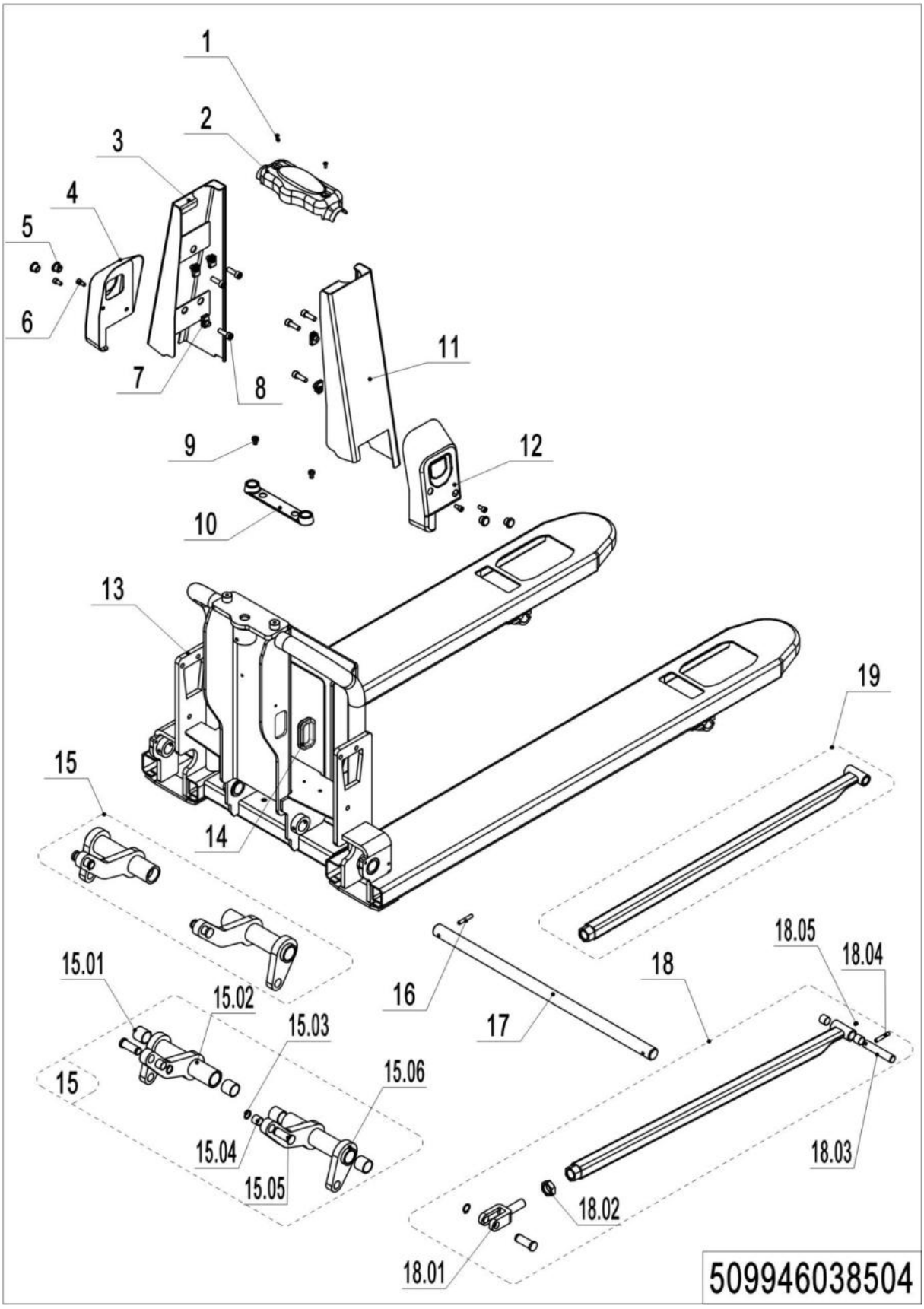

02 Truck Frame （509946038504）Continuation

No.	Item Code	Mark	Item Description	Qty.	Substitute	Note
19	509938510002		Push Rod (1150)	1		
19	509938510003		Push Rod (1220)	1		

Chapter 4: Steering System, Braking System, Wheels

01 Tiller Unit(509946011003)

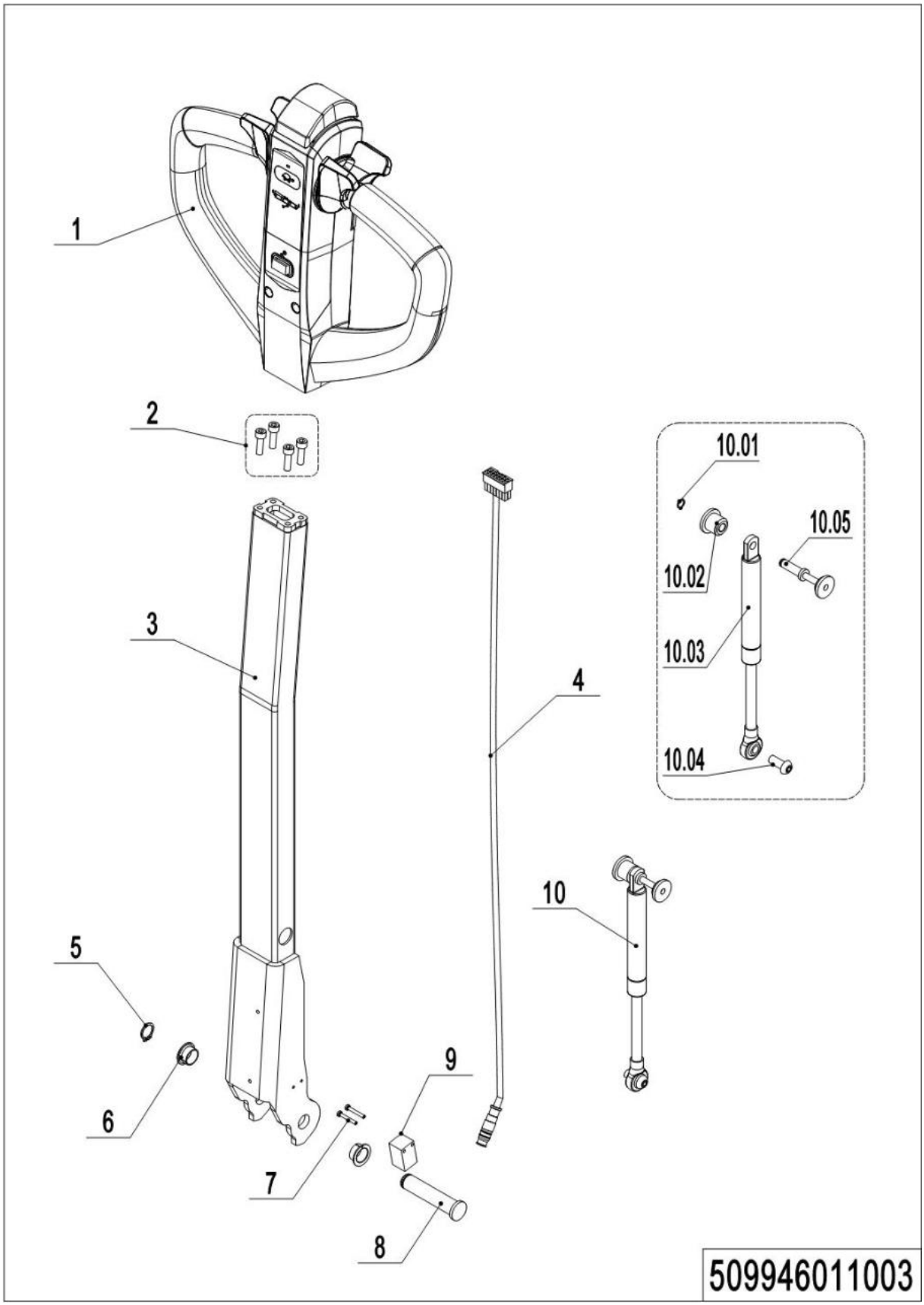

1= Supply as package. 2= Supply with constraints. 3= Phasing-out supply. 4= Supply as assembly. 5= Check other tables.

01 Tiller Unit(509946011003)

No.	Item Code	Mark	Item Description	Qty.	Substitute	Note
1	922100100080	2	Control Handle	1		
1	922100100124		Control Handle	1		
2	910200200036	1	Screw	4		
3	509911010002		Tiller	1		
4	509933010007		Wire Harness	1		
4	509933010045		Wire Harness	1		
5	910401300006		Circlip	1		
6	940500200001		Bushing	2		
7	941101100001	1	Screw	2		
8	508011020004		Pin	1		
9	920200400027		Proximity Switch	1		
10	508098510084		Gas Spring Kit	1		
10.1	910401300001		Circlip	1		
10.2	508011020005		Fixing Base	1		
10.3	508011010001		Gas Spring	1		
10.4	941100100011	1	Screw	1		
10.5	508011010002		Pin	1		

02 Tiller(509946011004)

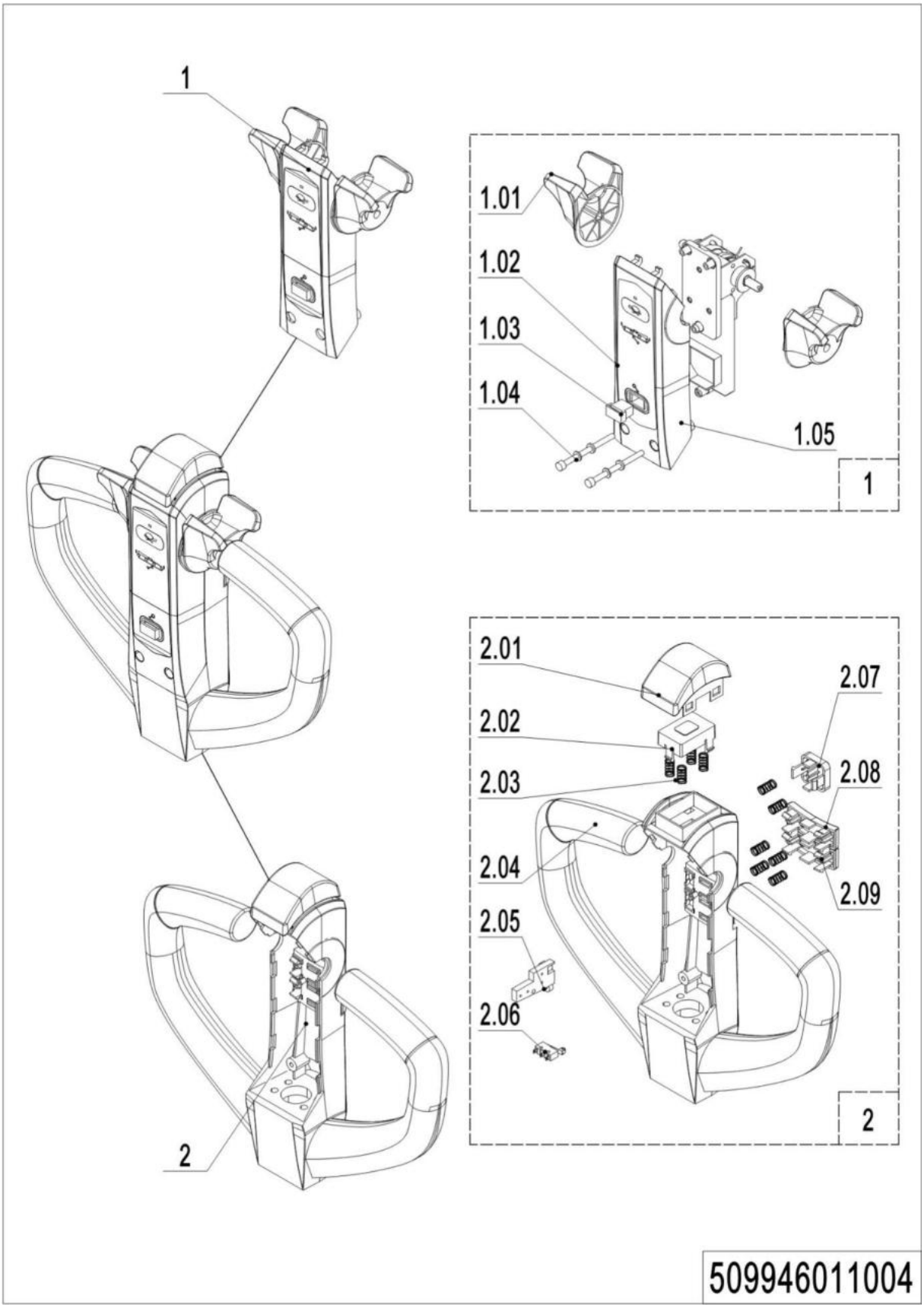

1= Supply as package. 2= Supply with constraints. 3= Phasing-out supply. 4= Supply as assembly. 5= Check other tables.

02 Tiller(509946011004)

No.	Item Code	Mark	Item Description	Qty.	Substitute	Note
1	509998510017	2	Handle Cap	1		
1.01	509998520022		Dial Key	1		
1.02	509998520023		Indicator Light	1		
1.03	509998520024		magnetic?snap	1		
1.04	910200200030	1	Screw	2		M5*50
1.05	509998520025	2	Cover	1		
2	509998510016		Handle Cap	1		
2.01	509998520027		Button Cap	1		
2.02	509998520028		Cover	1		
2.03	509998520029		Spring	1		θ0.6*θ8.7*16
2.04	509998520030	2	Control Handle body	1		
2.05	509998520031		Wire Harness	1		
2.06	509998520032		Wire Harness	1		
2.07	509998520033		Button Cap	1		
2.08	509998520034		Button Cap	1		
2.09	509998520035		Button Cap	1		

03 Tiller(509946011012)

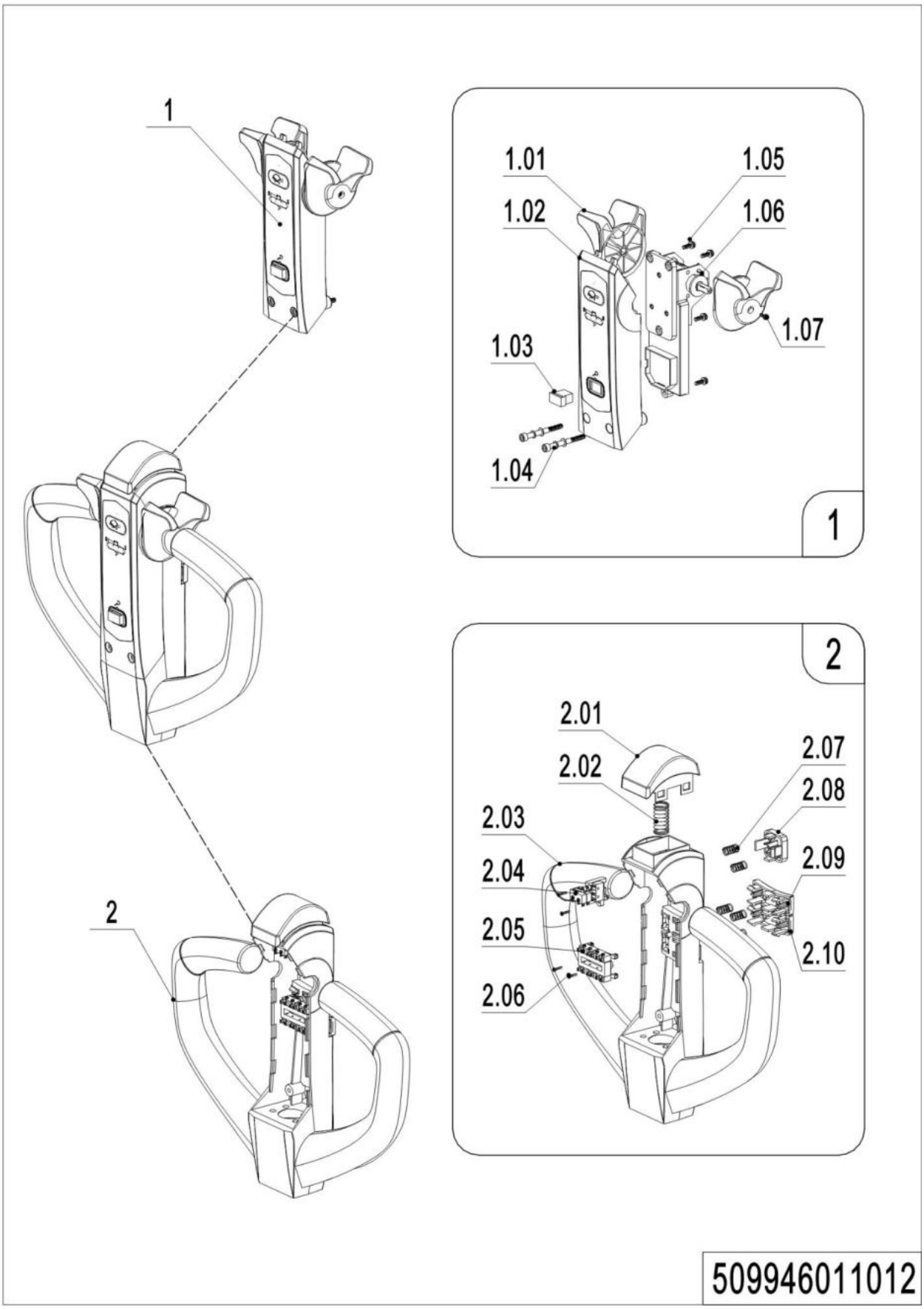

03 Tiller(509946011012)

No.	Item Code	Mark	Item Description	Qty.	Substitute	Note
1	509998510038	2	Handle Cap	1		
1.01	509998520022		Dial Key	2		
1.02	509998520025		Cover	1		
1.03	509998520024		magnetic?snap	1		
1.04	509998520065	1	Bolt Kits	2		
1.05	509998520066	2	Screw	4		
1.06	509998520067		Accelerator	1		
1.07	509998520068		Screw	2		
2	509998510016		Handle Cap	1		
2.01	509998520027		Button Cap	1		
2.02	509998520029		Spring	1		
2.03	509998520030		Control Handle body	1		
2.04	509998520069	2	Wire Harness	1		
2.05	509998520032		Wire Harness	1		
2.06	509998520070		Screw	4		
2.07	509998520071		Spring	6		
2.08	509998520033		Button Cap	1		
2.09	509998520034		Button Cap	1		
2.10	509998520035		Button Cap	1		

04 Load Wheel (Tandem)(509946017001)

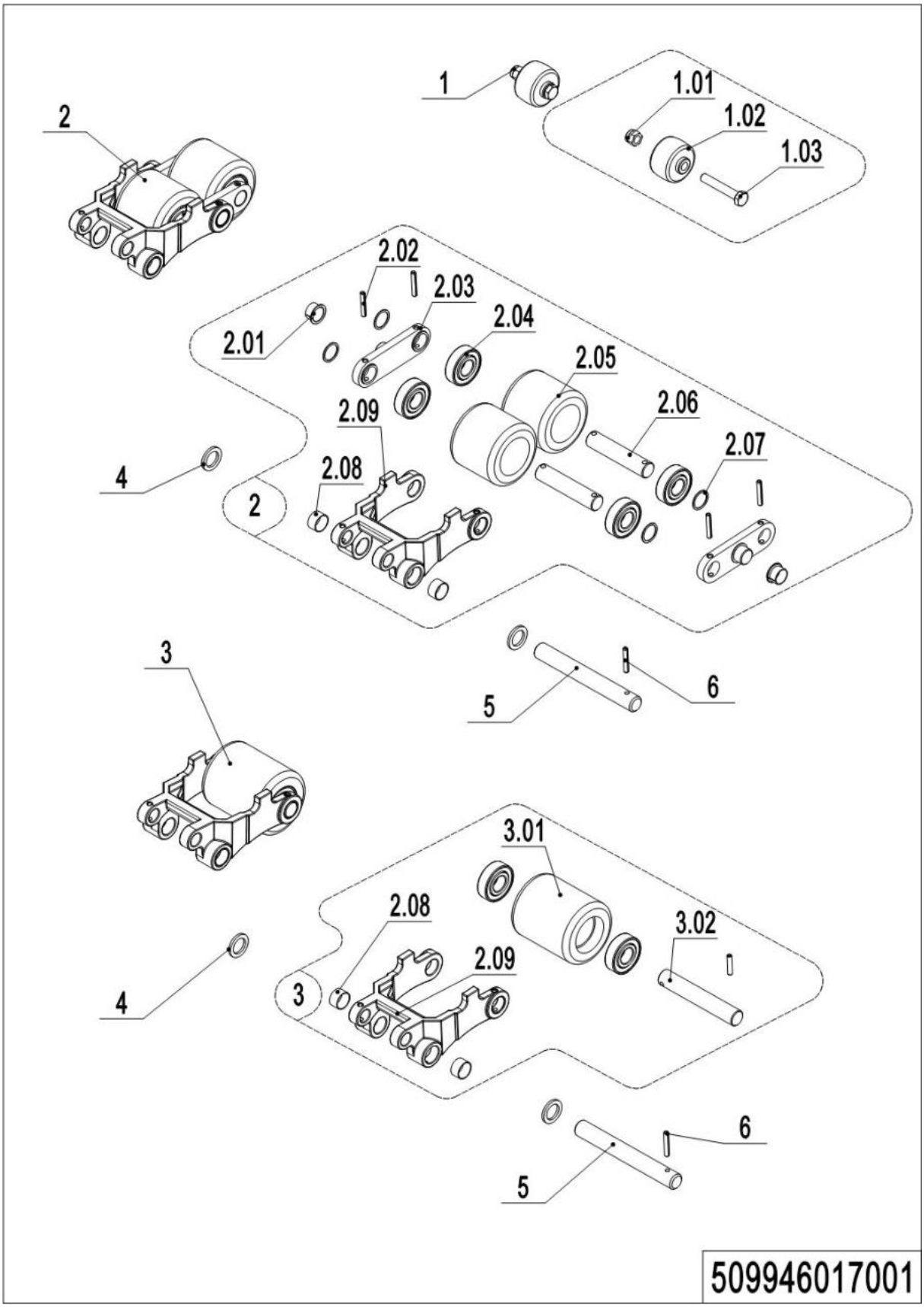

1= Supply as package. 2= Supply with constraints. 3= Phasing-out supply. 4= Supply as assembly. 5= Check other tables.

04 Load Wheel (Tandem)(509946017001)

No.	Item Code	Mark	Item Description	Qty.	Substitute	Note
1	502398510003		Pulley components	2		
1.01	910300500005	1	Nut	2		
1.02	505638520039		Running Pulley	2		
1.03	941100200019	1	Bolt	2		
2	509998510004		Wheel	2		
2.01	940500200038		Bushing	4		
2.02	910600400027	1	Spring Pin	8		
2.03	508017020001		Plate	4		
2.04	910700200019		Bearing	8/4		
2.05	940300300047		WheelΦ80x70	4		
2.06	502317020001		Axle	4		
2.07	940600500013		Washer	8/4		double /Single
2.08	940500100088		Bushing	4		
2.09	508038520130		Riser	2		
3	509998510005	2	Wheel	2		
3.01	940300300023		WheelΦ80x93	2		
3.02	301017020001		Axle	2		
4	502338520033		Roller	4		
5	502338520031		Pin	2		
6	910600400025		Spring Pin	2		

05 Caster (509946016501)

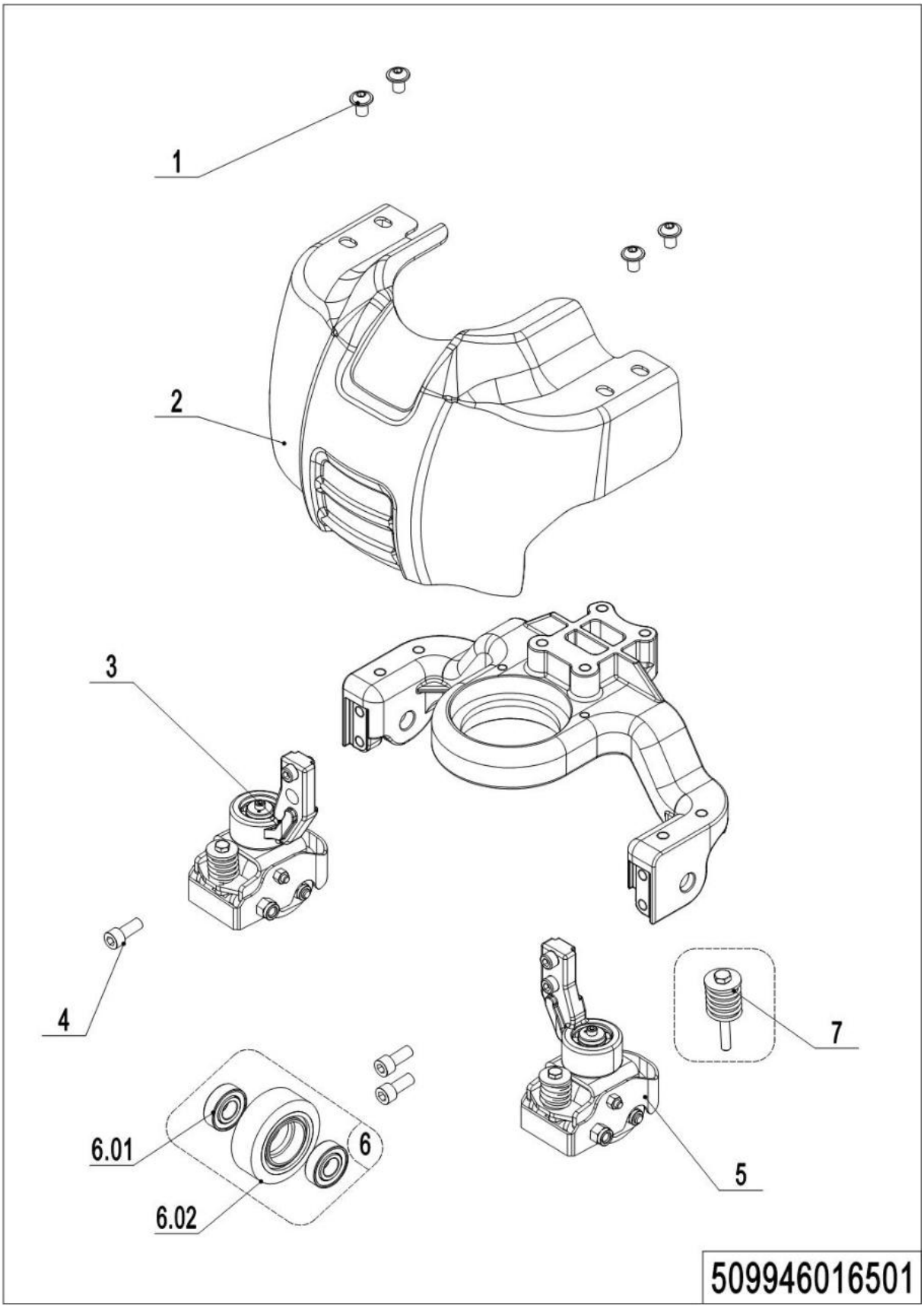

1= Supply as package. 2= Supply with constraints. 3= Phasing-out supply. 4= Supply as assembly. 5= Check other tables.

05 Caster (509946016501)

No.	Item Code	Mark	Item Description	Qty.	Substitute	Note
1	941100100005	1	Screw	4		
2	509916520001		Apron	1		
3	508016510002		Caster Assembly	1		
4	910200200076	1	Screw	4		
5	508016510005		Caster Assembly	1		
6	502398510015	2	Load Wheel Kit	2		
6.01	910700200018		Bearing	4		
6.02	940300300017		WheelΦ80x30	2		
7	508098510047		Spring Components	2		

06 Caster (509946016502)

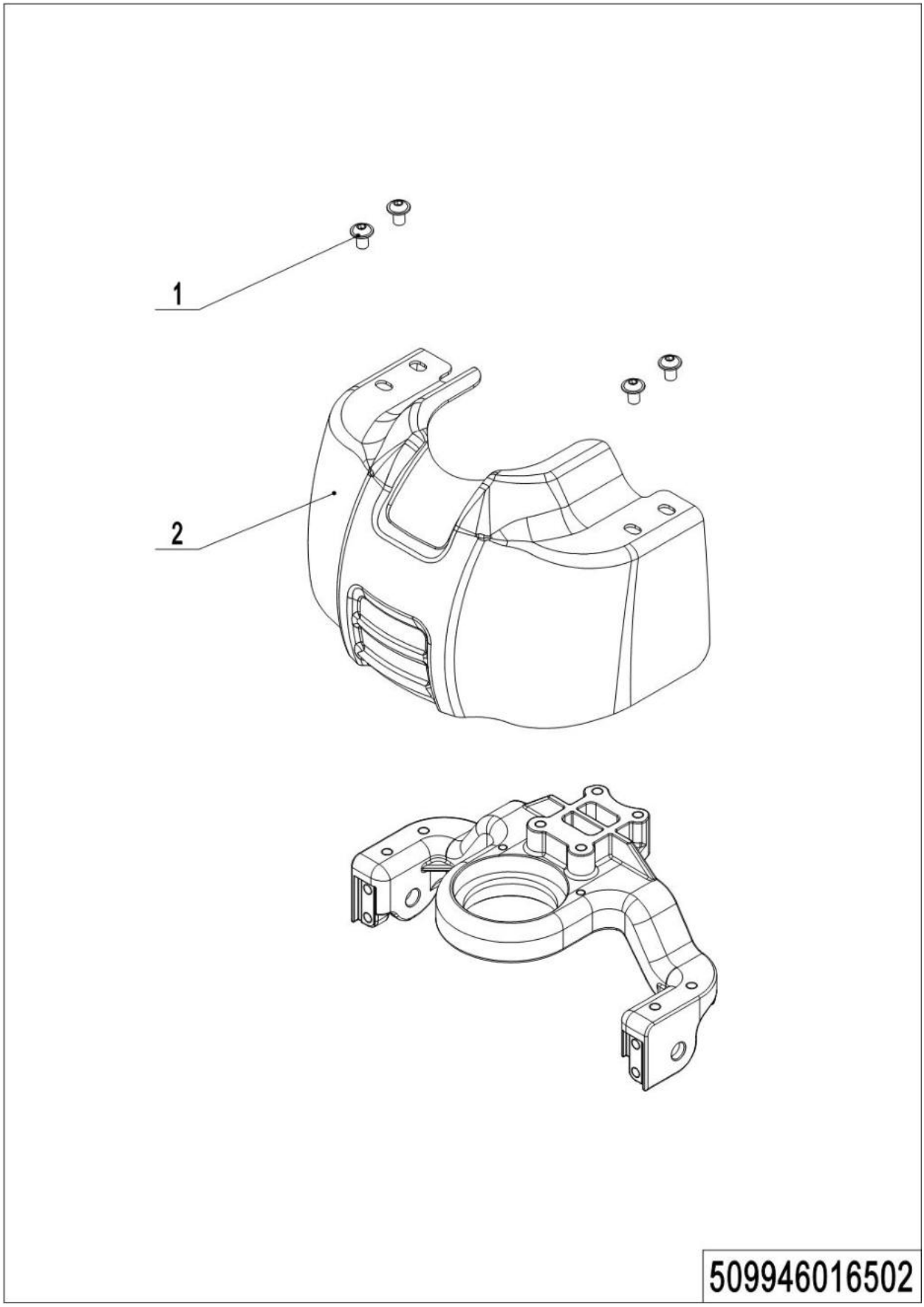

1= Supply as package. 2= Supply with constraints. 3= Phasing-out supply. 4= Supply as assembly. 5= Check other tables.

06 Caster (509946016502)

No.	Item Code	Mark	Item Description	Qty.	Substitute	Note
1	941100100005	1	Screw	4		
2	509916520000		Apron	1		

Chapter 5: Electrical Parts

01 Wire Harness (509946033005)

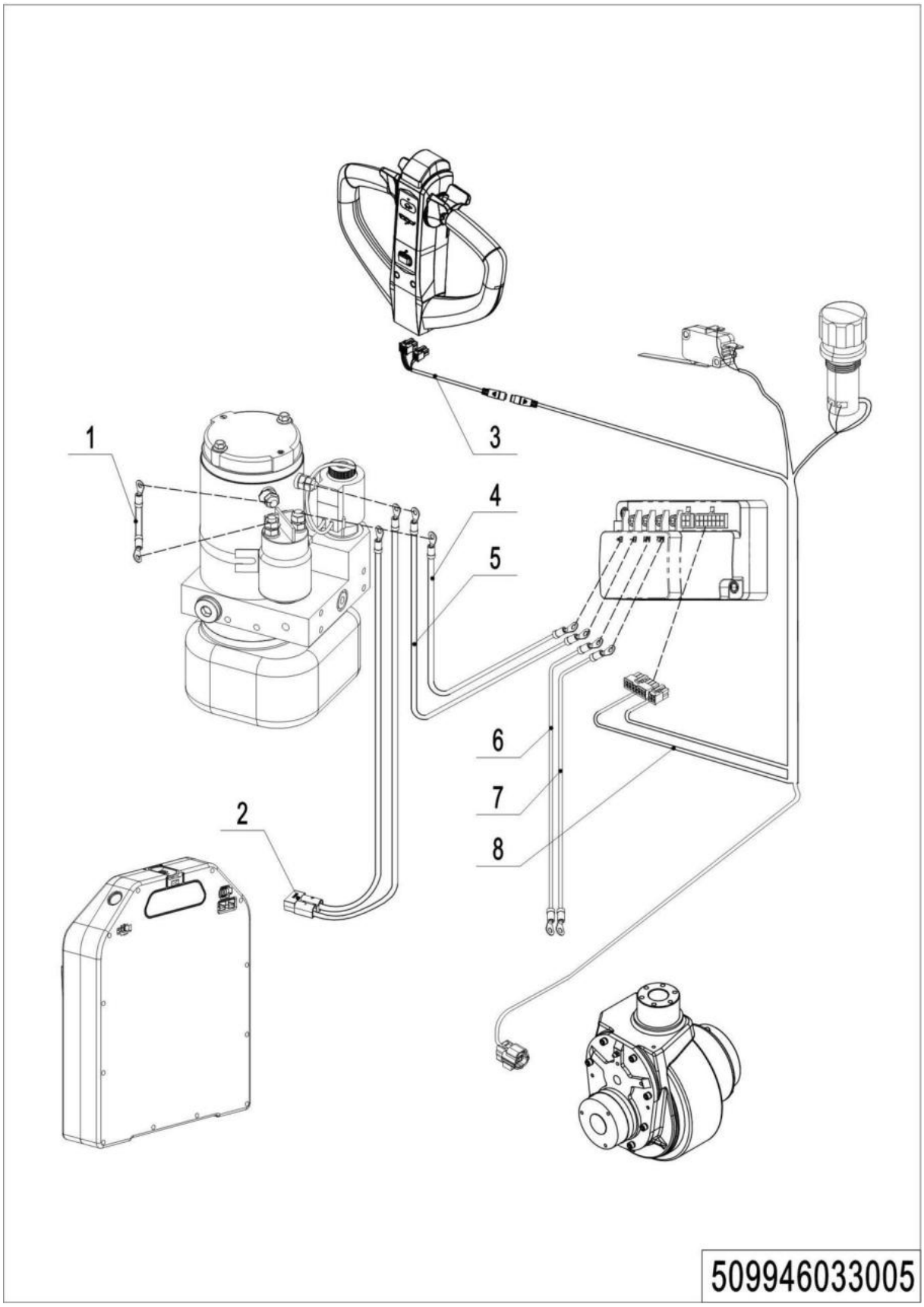

1= Supply as package. 2= Supply with constraints. 3= Phasing-out supply. 4= Supply as assembly. 5= Check other tables.

01 Wire Harness (509946033005)

No.	Item Code	Mark	Item Description	Qty.	Substitute	Note
1	509933010012		Cables	1		
2	509933010022		Wire Harness	1		
3	509933010007		Wire Harness	1		
4	509933010013		Cables	1		JC
5	509933010014		Cables	1		JC
6	509933010015		Cables	1		JC
7	509933010016		Cables	1		JC
8	509933010001		Wire Harness	1		JC

02 Wire Harness (509946033011)

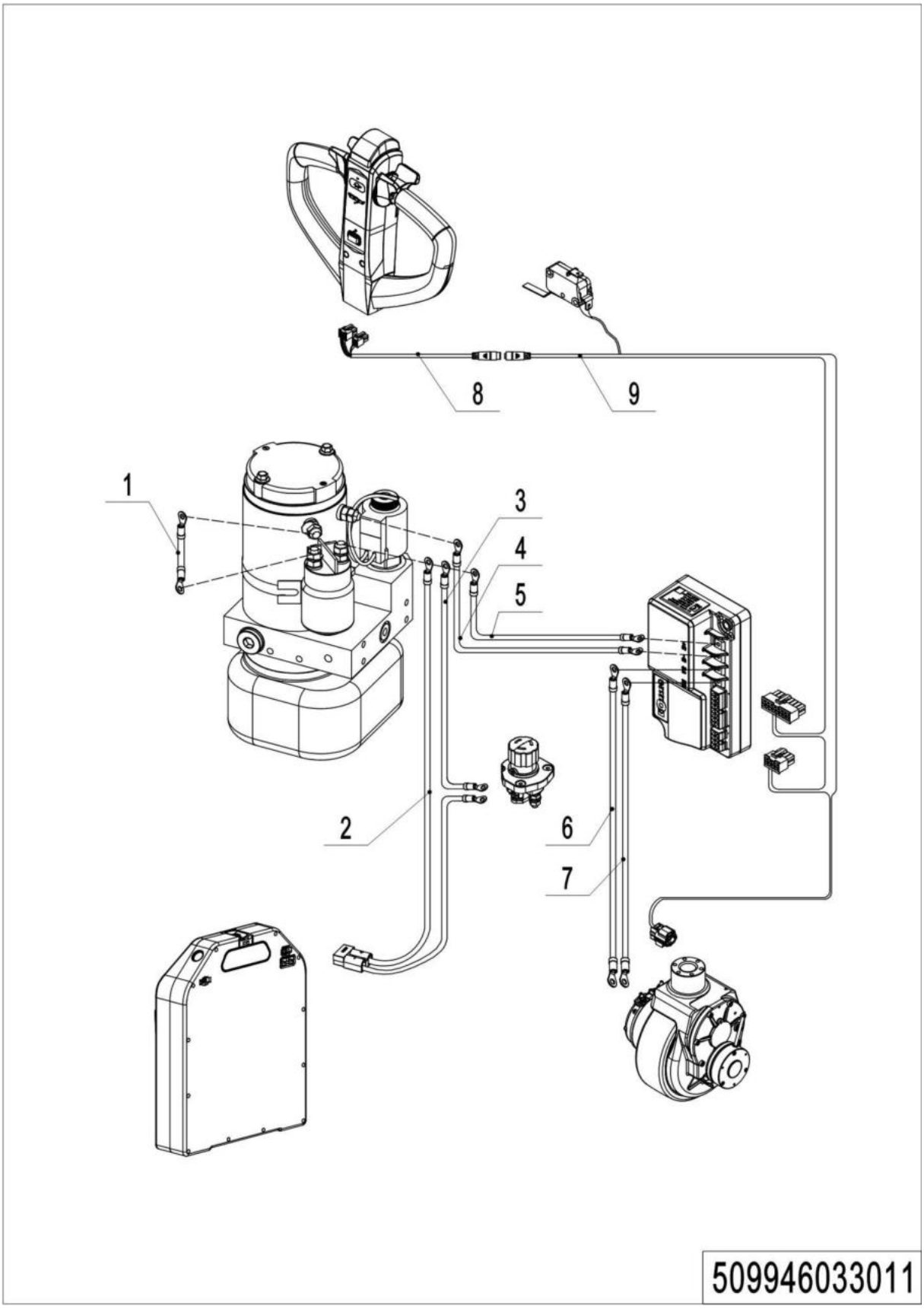

1= Supply as package. 2= Supply with constraints. 3= Phasing-out supply. 4= Supply as assembly. 5= Check other tables.

02 Wire Harness (509946033011)

No.	Item Code	Mark	Item Description	Qty.	Substitute	Note
1	509933010012		Cables	1		
2	509933010046		Wire Harness	1		
3	508033010033		Wire Harness	1		
4	509933010014		Cables	1		
5	509933010013		Cables	1		
6	509933010015		Cables	1		
7	509933010016		Cables	1		
8	509933010044		Wire Harness	1		
9	509933010045		Wire Harness	1		

03 Electronic components (509946033006)

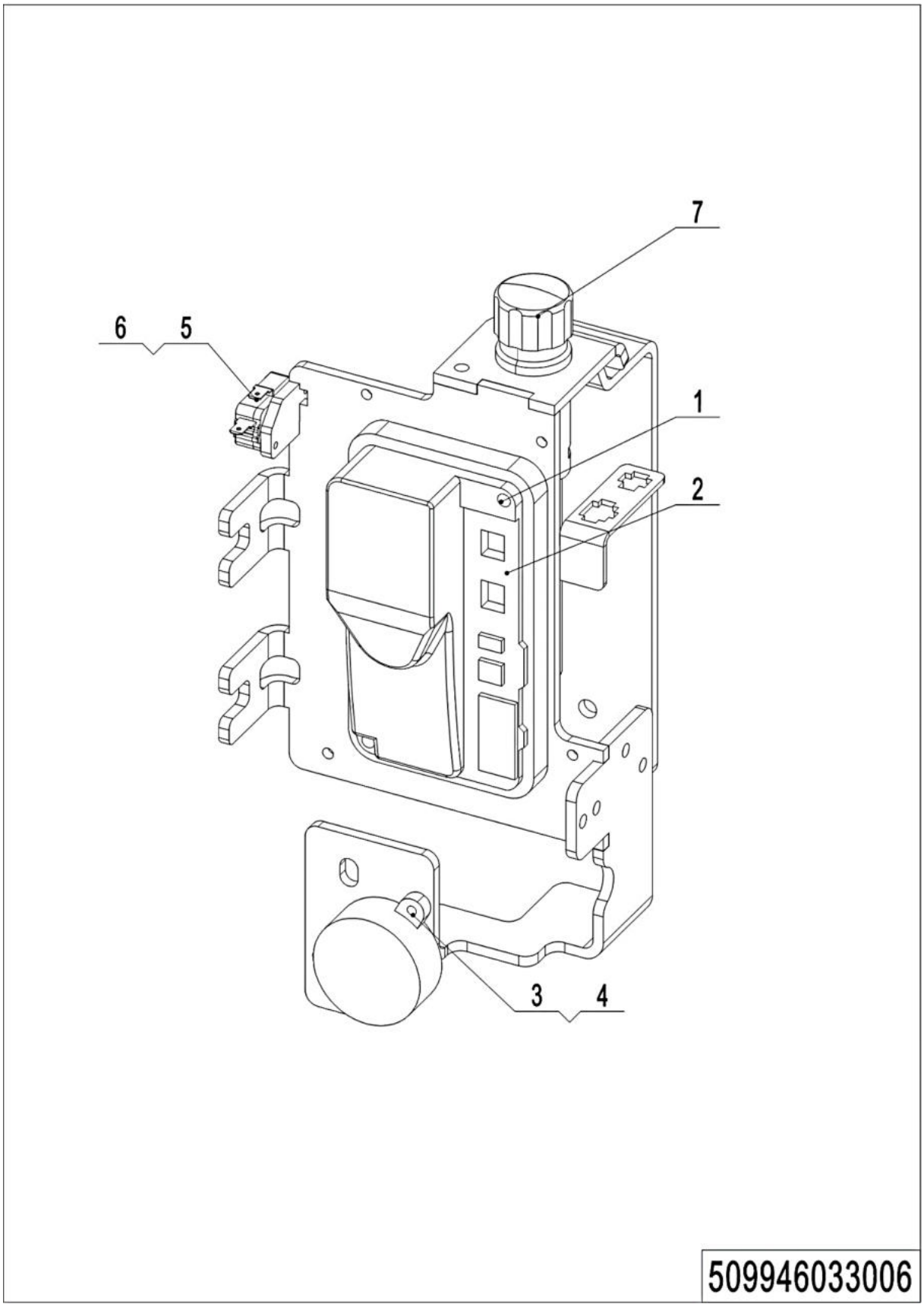

1= Supply as package. 2= Supply with constraints. 3= Phasing-out supply. 4= Supply as assembly. 5= Check other tables.

03 Controller (509946033006)

No.	Item Code	Mark	Item Description	Qty.	Substitute	Note
1	910200200026	1	Screw	2		
2	921400100129		Controller	1		JC
3	910200300002	1	Screw	2		
4	920500100003		Horn	1		
5	910200200004	1	Screw	2		
6	920200300012		Microswitch	1		
7	920200100015		Emergency Button	1		

04 Electronic components (509946033012)

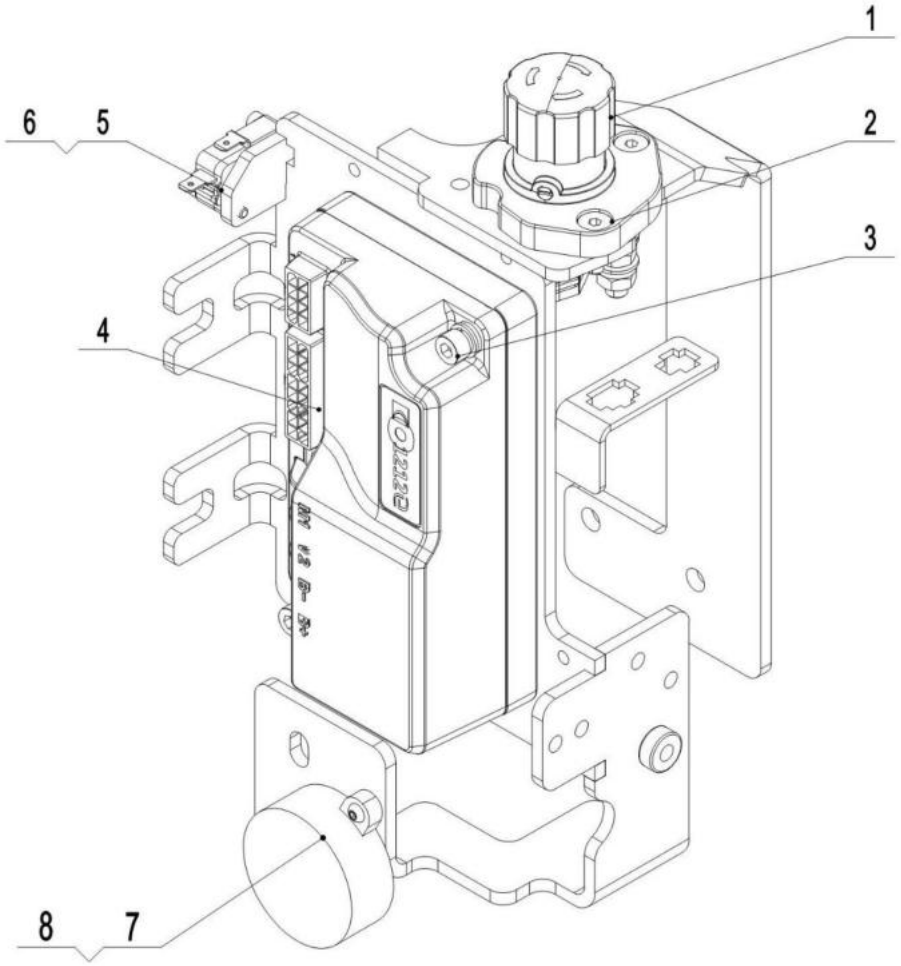

509946033012

1= Supply as package. 2= Supply with constraints. 3= Phasing-out supply. 4= Supply as assembly. 5= Check other tables.

04 Controller (509946033012)

No.	Item Code	Mark	Item Description	Qty.	Substitute	Note
1	920200100027		Emergency Button	1		
2	910200400010		Screw	2		
3	910200200025		Screw	2		
4	921400100174		Controller	1		
5	910200200004		Screw	2		
6	920200300012		Microswitch	1		
7	509998520062		buzzer	1		
8	910200300002		Screw	2		

05 Charger (509946036501)

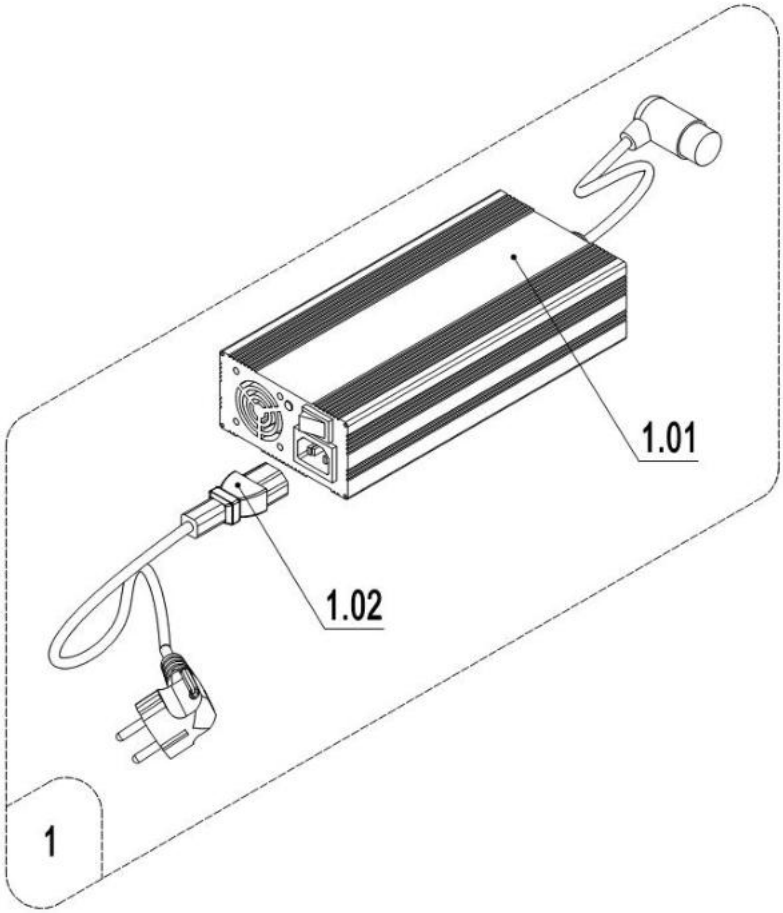

508046036501

1= Supply as package. 2= Supply with constraints. 3= Phasing-out supply. 4= Supply as assembly. 5= Check other tables.

05 Charger (509946036501)

No.	Item Code	Mark	Item Description	Qty.	Substitute	Note
1	921000200353		Charger 24V8A (Aisa-CHN)	1		SS
1	921000200464		Charger 24V8A (Aisa-ENG)	1		SS
1	508036510002		Charger24V8A(ENG)	1		SS
1	508036510003		Charger24V8A((US, JAP)	1		SS
1	508036510004		Charger24V8A(EU)	1		SS
1	508036510005		Charger24V8A(AUS)	1		SS
1	508036510006		Charger24V8A(ITA)	1		SS
1	508036510007		Charger24V8A(CH)	1		SS
1	508036510008		Charger24V8A(ISR)	1		SS
1	508036510009		Charger24V8A(BRA)	1		SS
1	508036510010		Charger24V8A(ARG)	1		SS
1	508036510033		Charger24V8A(IND)	1		SS
1	508036510036		Charger24V8A(ZA)	1		South Africa
1	508036510040		Charger24V8A(US)	1		QQE
1	921000200463		Charger 24V5A (Aisa-ENG)	1		SS
1	508036510053		Charger24V12A(Asia)	1		TL
1	508036510054		charger24V12A(ENG)	1		TL
1	508036510055		charger24V12A(US)	1		TL
1	508036510056		charger24V12A(EU)	1		TL
1	508036510057		charger24V12A(AUS)	1		TL
1	508036510058		charger24V12A(ITA)	1		TL
1	508036510059		charger24V12A(CH)	1		TL
1	508036510060		charger24V12A(ISR)	1		TL
1	508036510061		charger24V12A(BRA)	1		TL
1	508036510062		charger24V12A(ARG)	1		TL
1.01	921000200590		Charger24V12A	1		TL

05 Charger (509946036501) Continuation

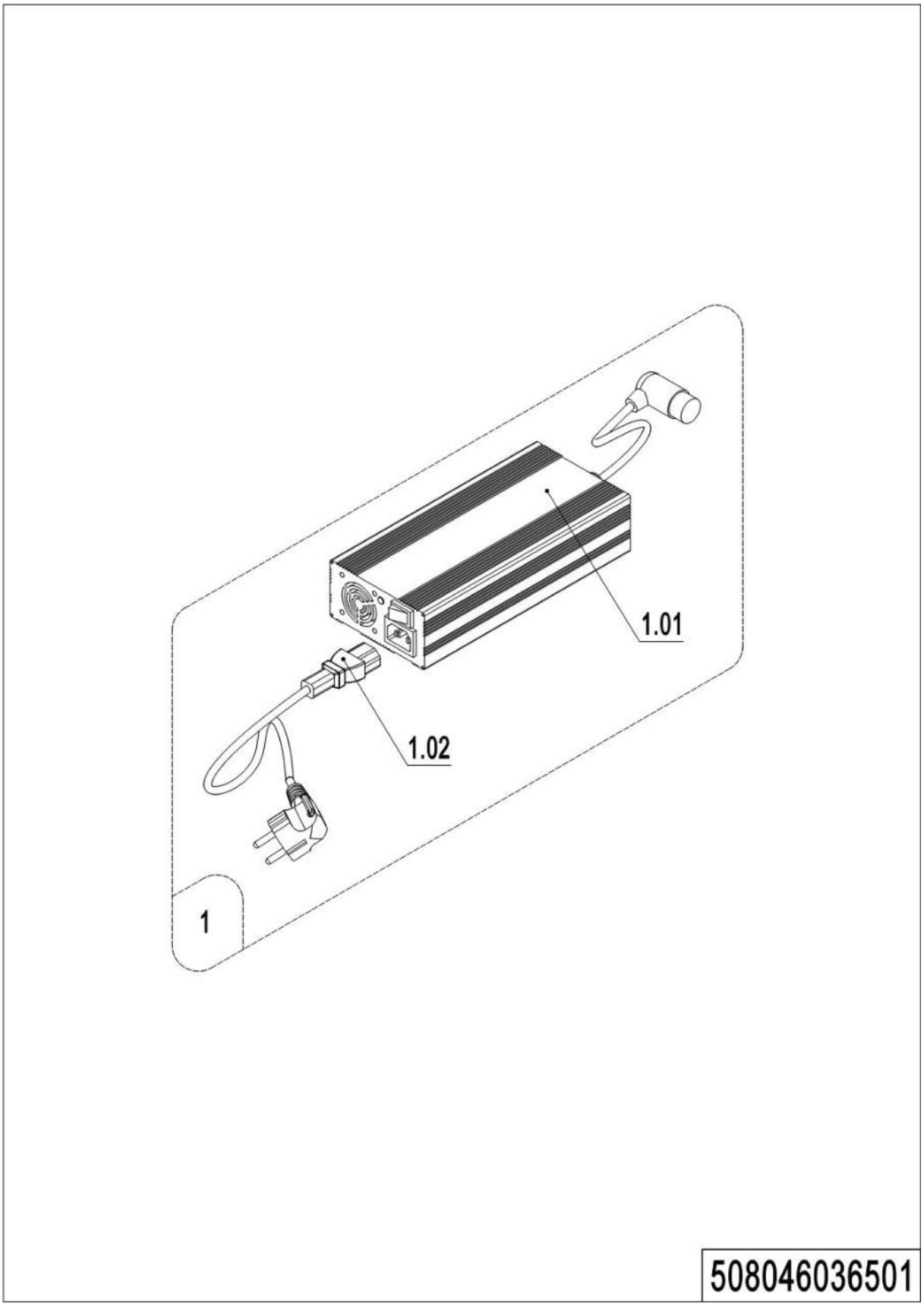

05 Charger Continuation (509946036501)

No.	Item Code	Mark	Item Description	Qty.	Substitute	Note
1.01	508036510025		Charger24V5A(EU)	1		SS
1.01	921000200464		Charger 24V8A (Aisa-ENG)	1		SS
1.01	921000200355		Charger 24V8A	1		SS(CE)
1.01	921000200354		Charger 24V8A	1		SS
1.01	921000200466		Charger 24V8A	1		QQE
1.01	921000200351		Charger 24V5A (Aisa-CHN)	1		SS
1.01	921000200463		Charger 24V5A (Aisa-ENG)	1		SS
1.01	921000200418		Charger 24V5A (EU)	1		SS
1.01	921500200050		Power Cord(ARG)	1		
1.01	921500200024		Power Cord(AUS)	1		
1.01	921500200049		Power Cord(BRA)	1		
1.01	921500200023		Power Cord(USA)	1		
1.01	921500200022		Power Cord(EU)	1		
1.02	921500200026		Power Cord(CH)	1		
1.02	921500200028		Power Cord(ISR)	1		
1.02	921500200025		Power Cord(ITA)	1		
1.02	921500200047		Power Cord(ENG)	1		
1.02	921500200027		Power Cord(ENG)	1		
1.02	921500200038		Power Cord(ZA)	1		South Africa

06 Traction Battery (509946037002)

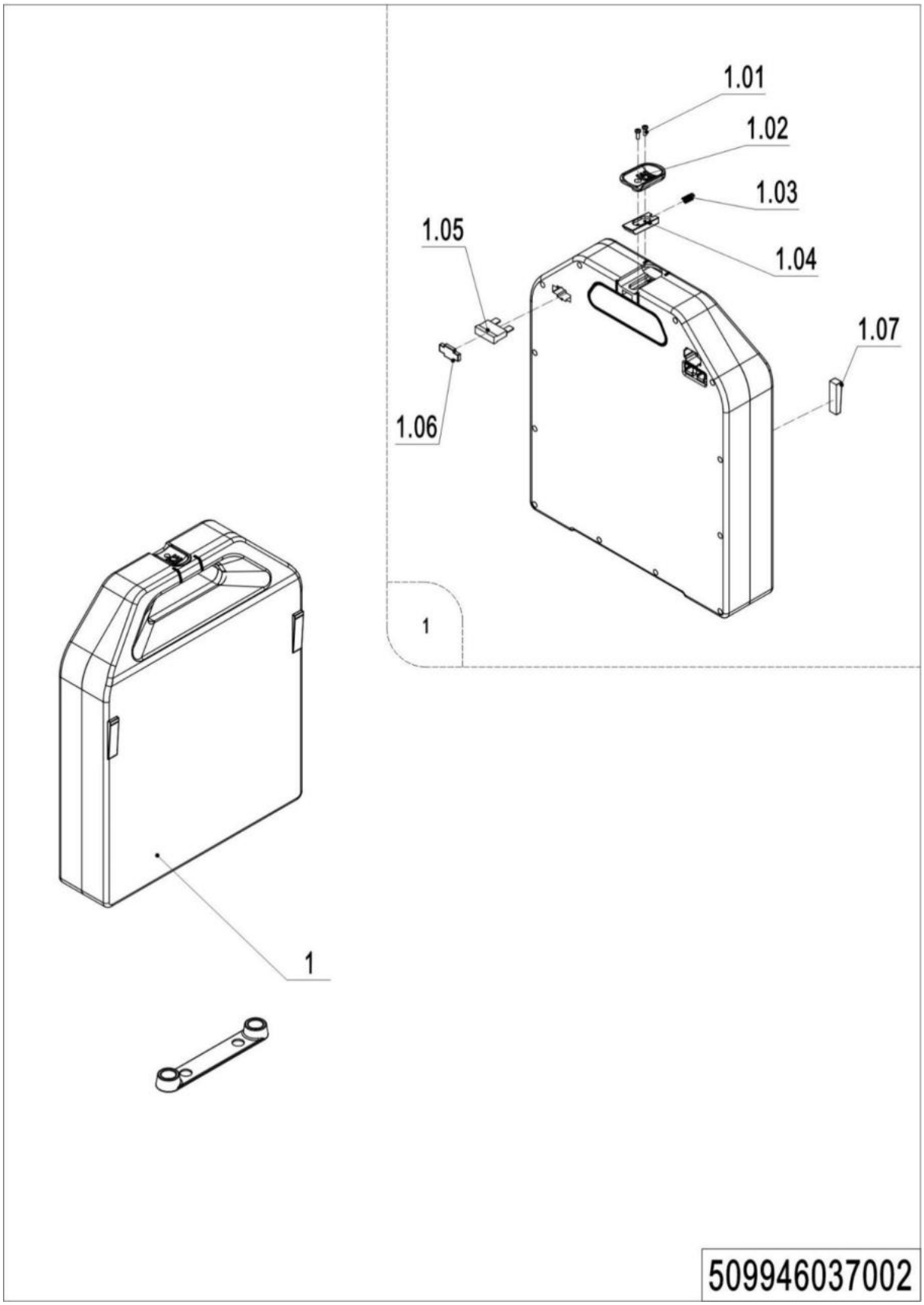

06 Traction Battery (509946037002)

No.	Item Code	Mark	Item Description	Qty.	Substitute	Note
1	509937010009		Li Battery24V20Ah	1		HF
1	509937010010		Li Battery24V40Ah	1		HF
1	509937010021		Li Battery24V20Ah	1		EN1175
1	509937010022		Li Battery24V40Ah	1		EN1175
1.01	910200500011	1	Screw	2		
1.02	508098520022	2	Plastic Handle	1		
1.03	508098520024	2	Spring	1		
1.04	508098520023	2	Fixing Mount	1		
1.05	920100200006		Fuse	1		
1.06	508098520021	2	waterproof plug	1		
1.07	509998520000		Stop Block	2		

Chapter 6: Others

01 Labels and Decals-EU (509946047001)

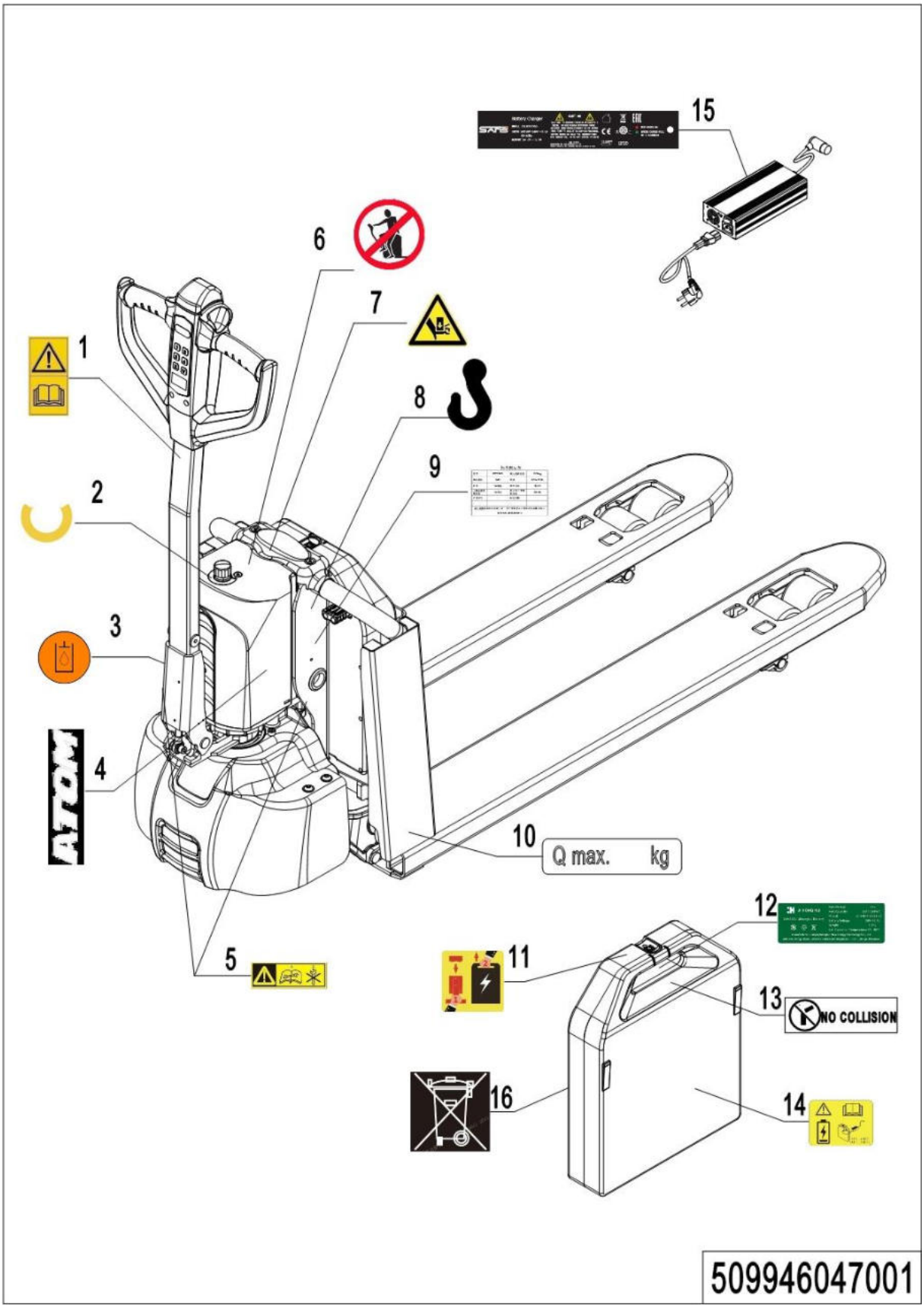

1= Supply as package. 2= Supply with constraints. 3= Phasing-out supply. 4= Supply as assembly. 5= Check other tables.

01 Labels and Decals-EU （509946047001）

No.	Item Code	Mark	Item Description	Qty.	Substitute	Note
1	941200300002		Label	1		
2	509947020000		Label	1		
3	941200300003		Label	1		
4	509947020001		Label	1		
5	508047020004		Label	2		
6	941200100003		Label	2		
7	508047020007		Label	1		
8	941200300001		Label	2		
9	509947520000		Truck data plate	1		
10	941200200009		Label	2		
11	509947020002		Label	1		
12	509947020003		Label	1		
13	508047020002		Label	1		
14	509947020004		Label	1		
15	509947020005		Lable	1		
16	508047020015		Label	1		

02 Labels and Decals-US (509946047002)

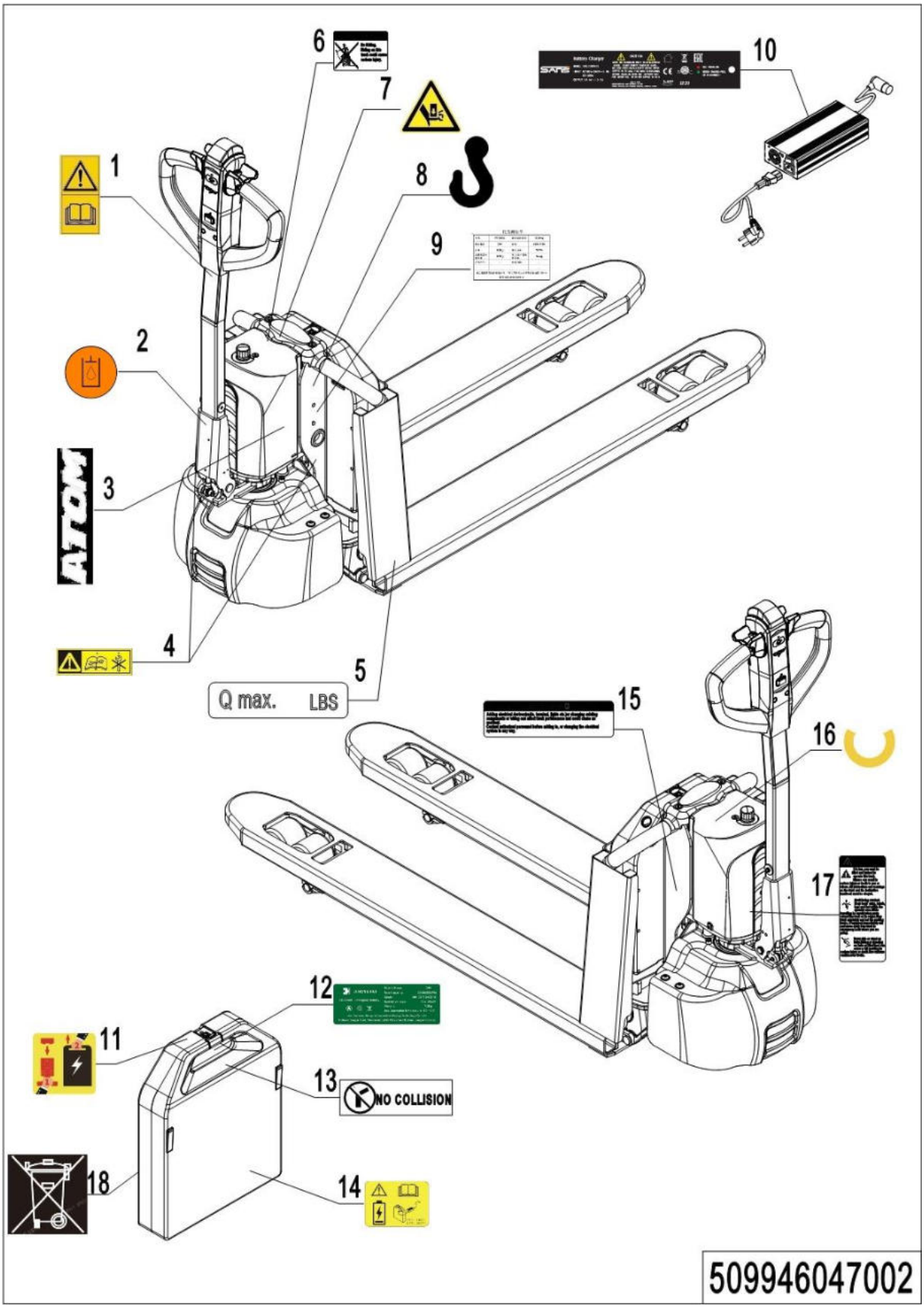

1= Supply as package. 2= Supply with constraints. 3= Phasing-out supply. 4= Supply as assembly. 5= Check other tables.

02 Labels and Decals-US (509946047002)

No.	Item Code	Mark	Item Description	Qty.	Substitute	Note
1	941200300002		Label	1		
2	941200300003		Label	1		
3	509947020001		Label	1		
4	508047020004		Label	2		
5	941200200009		Label	2		
6	941200100011		Label	1		
7	508047020007		Label	1		
8	941200300001		Label	2		
9	509947520000		Truck data plate	1		
10	509947020005		Lable	1		
11	509947020002		Label	1		
12	509947020003		Label	1		
13	508047020002		Label	1		
14	509947020004		Label	1		
15	941200100010		Label	1		
16	509947020000		Label	1		
17	941200100009		Label	1		
18	508047020015		Label	1		

Appendix

01 Electrical Circuit Diagram (509946045504)

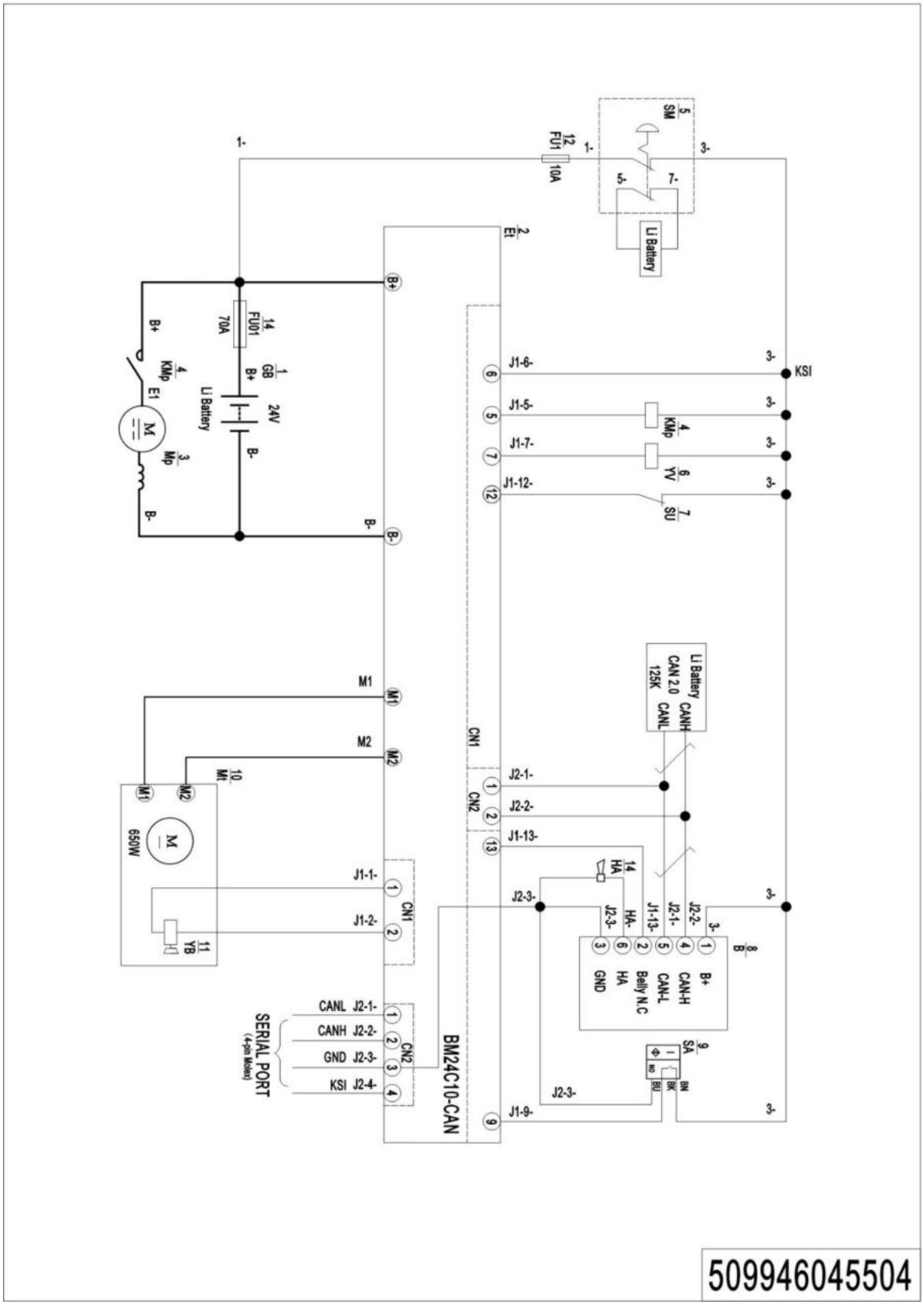

509946045504

1= Supply as package. 2= Supply with constraints. 3= Phasing-out supply. 4= Supply as assembly. 5= Check other tables.

02 Electrical Circuit Diagram (509946045505)

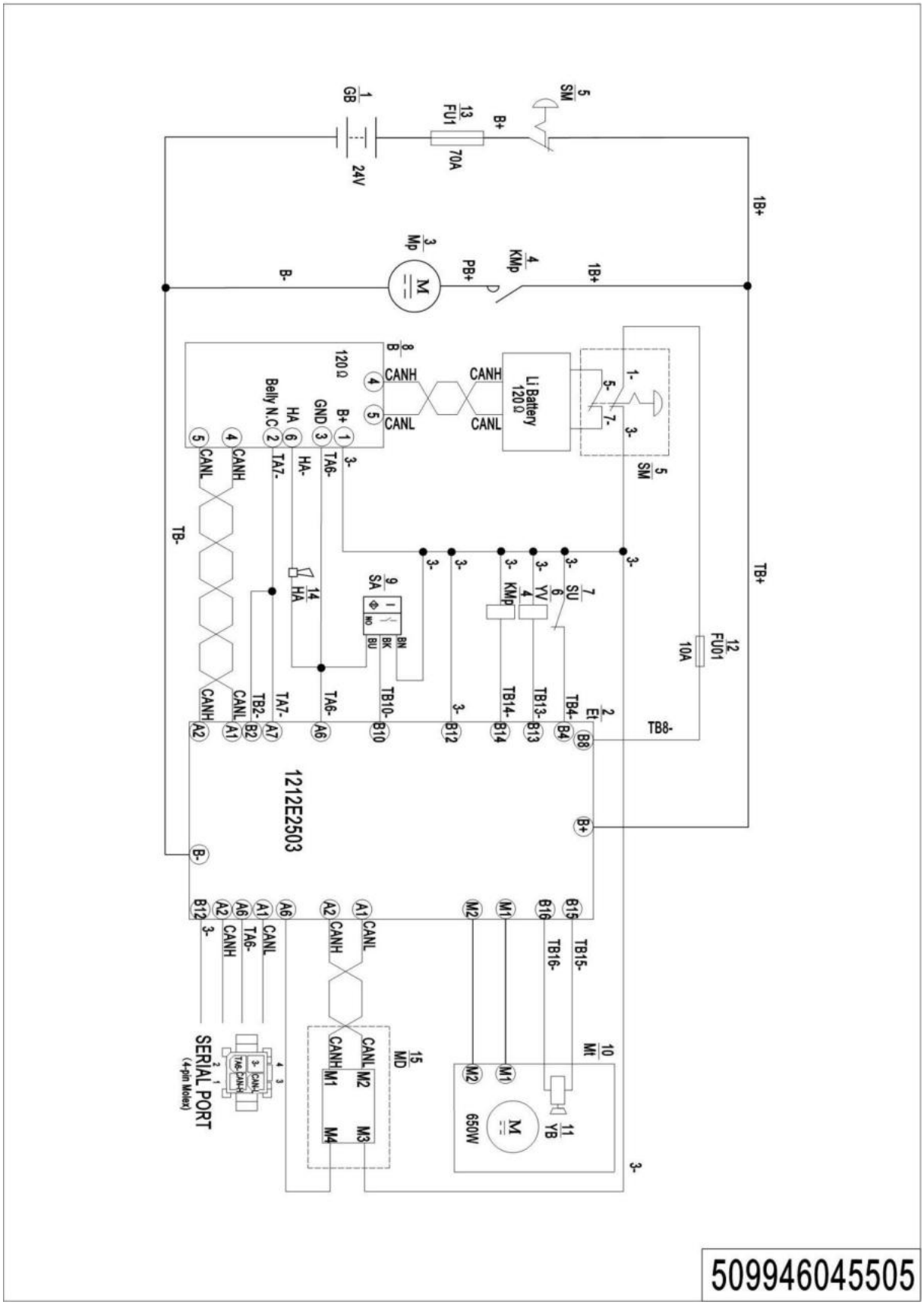

509946045505

03 Hydraulic Circuit Diagram (508046045502)

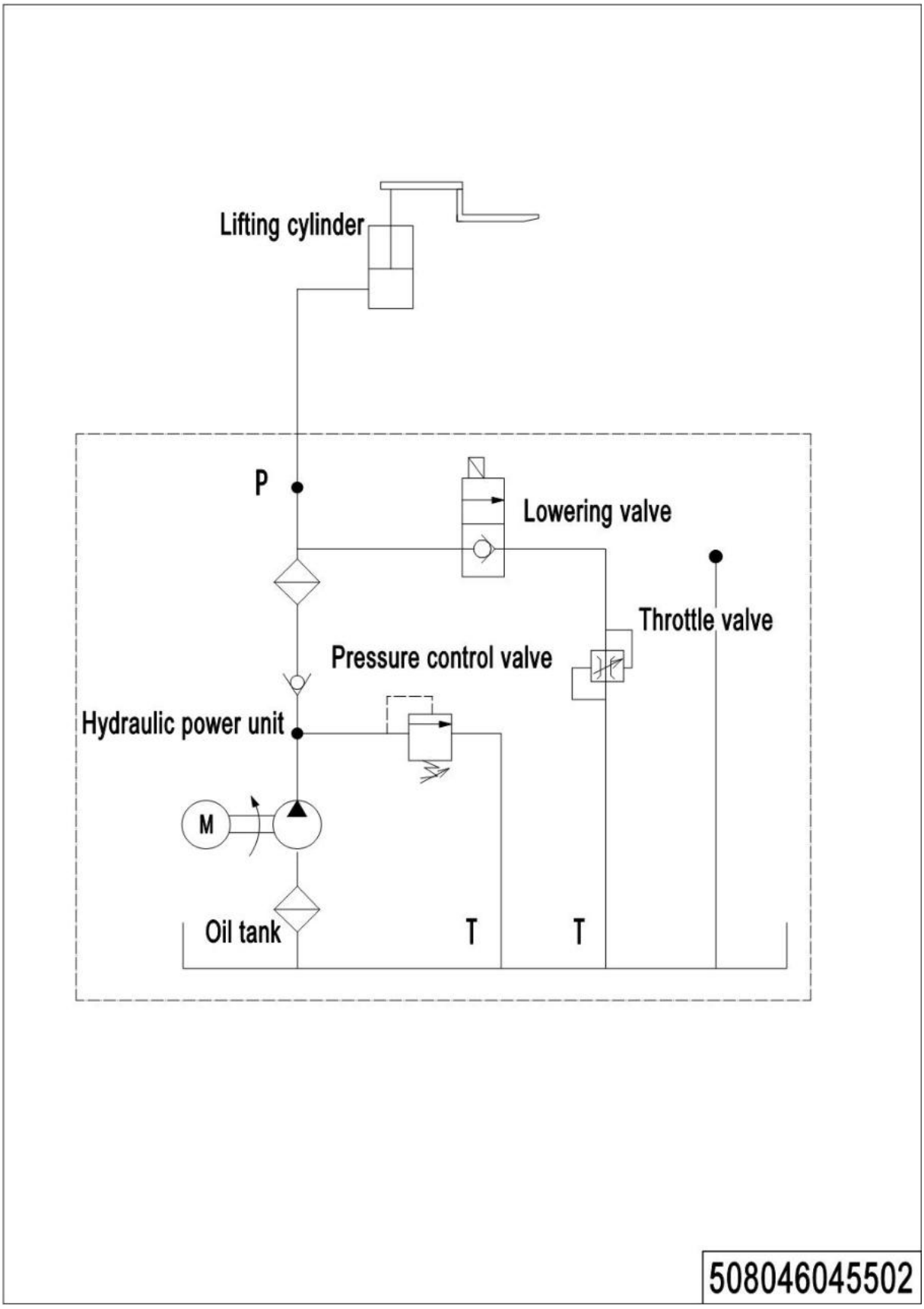

04 Consumable Parts List

No.	Item Code	Item Description	Qty.	Chapter/ Section/ Number
1	910700200058	Bearing	1	Chapter 1/01/4
2	910700600044	Bearing	1	Chapter 1/01/7
3	508098510018	Seal Kit	1	Chapter 2/01/12.01 Chapter 2/02/12.01
4	508598510004	Seal Kit	1	Chapter 2/01/12.03 Chapter 2/02/12.03
5	940500100097	Bushing	2	Chapter 3/01/11.01 Chapter 2/02/15.01
6	940500100083	Bushing	8	Chapter 3/01/11.05 Chapter 2/02/15.04
7	940500200001	Bushing	2	Chapter 4/01/06 Chapter 4/03/06
7	940500200001	Bushing	2	Chapter 4/05/06
8	508011010001	Gas Spring	1	Chapter 4/01/10.3
9	940500200038	Bushing	4	Chapter 4/04/2.01
10	910700200019	Bearing	8/4	Chapter 4/04/2.04
11	940300300047	Wheel Φ80x70	4	Chapter 4/04/2.05
12	940500100088	Bushing	4	Chapter 4/04/2.09
13	940300300023	Wheel Φ80x93	2	Chapter 4/04/3.01
14	910700200018	Bearing	4	Chapter 4/05/6.01
15	940300300017	Wheel Φ80x30	2	Chapter 4/05/6.02
16	920100200006	Fuse	1	Chapter 5/06/1.05

1= Supply as package. 2= Supply with constraints. 3= Phasing-out supply. 4= Supply as assembly. 5= Check other tables.