Electric Pallet Truck

PTE15N Pro&PTE20N Pro

PARTS MANUAL

507746020101&507646020101

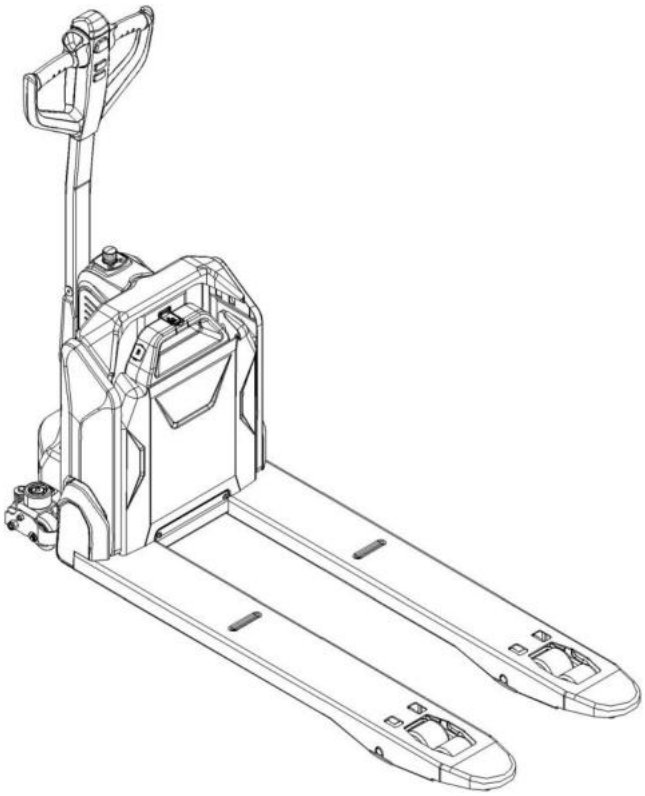

Version：V07

Truck Identification Number From：

Parts Manual

PTE15N Pro&PTE20N Pro-PM07EN

Please order spare parts from authorized dealers of our Company.

In order to avoid wrong delivery, all the orders for spare parts should specify the following items:

- Truck model, identification number and manufacture year.
- Orders for spare parts of mast, hydraulic transmission unit, steering axle, motor, etc. shall indicate the manufacture number of these parts.
- Codes for Our Company spare parts are shown in the table of parts manual. Please also pay attention to the description of supply status, order quantity, etc. (check the number listed in "Mark" column of the parts manual).

"Mark" Column:

The unmarked indicates the parts are in short supply cycle.

Number 1: supply as package. Indicating these that parts are small parts and seal parts, which are supplied in package unit and in short supply cycle.

Number 2: supply with constraints. Indicating that these spare parts are not in stock and will be prepared for production after receiving the order from customers, which are in long supply cycle.

Number 3: phasing-out supply. Indicating that these parts will be replaced by new parts due to technical improvements and the current stock will not be available when these parts run out. Please check the description of technical improvements notice.

Number 4: supply as assembly. Indicating that these parts are assembly parts defined by manufacture process, which cannot be supplied as a single part.

Number 5: check other tables.

This parts manual is the property of Our Company and can be shared under the confidential agreement only, Our Company has the right to claim for compensation of any unauthorized use. Copy without permission is not allowed.

Figures in the manual are not limited by the original design. our Company reserves the right to improve the products for continuous technology progress.

Table of Contents

Chapter 1: Drive System....5
01 Drive Unit Steering(PTE15N Pro)(507746013501)....5
02 Drive Assembly(PTE15N Pro)(507746013001)....7
03 Drive Unit Steering(PTE20N Pro)(507646013501)....9
04 Drive Assembly(PTE20N Pro)(507646013001)....13
Chapter 2: Hydraulic System....15
01 Hydraulic Components(PTE15N Pro)(507746023501)....15
02 Hydraulic Components(PTE20N Pro)(507646023502)....17
Chapter 3: Truck Frame....21
01 Truck Frame(PTE15N Pro) (507746038501)....21
02 Truck Frame(PTE15N Pro) (507746038502)....27
03 Truck Frame(PTE20N Pro)(507646038501)....33
04 Truck Frame(PTE20N Pro)(507646038502)....39
Chapter 4: Steering System, Braking System, Wheels....45
01 Tiller Unit(PTE15N Pro)(507746011001)....45
02 Tiller Unit(PTE20N Pro)(507646011001)....47
03 Control Handle(PTE15N Pro)(507746011002)....49
04 Control Handle(PTE20N Pro)(507646011002)....51
05 Load Wheel (Tandem)(PTE15N Pro)(507746017001)....53
06 Load Wheel (Tandem)(PTE20N Pro)(507646017001)....55
07 Caster(507746016501)....57
08 Caster(without)(507746016502)....59
Chapter 5: Electrical Parts....61
01 Wire Harness(PTE15N Pro)(507746033001)....61
02 Wire Harness(PTE20N Pro) (507646033001)....63
03 Controller(PTE15N Pro)(507746033002)....65
04 Controller(PTE20N Pro) (507646033002)....67
05 Charger (PTE15N Pro)(507746036501)....69
06 Charger(PTE15N Pro)(507746036502)....73
07 Charger(PTE20N Pro) (507646036501)....75
08 Charger(PTE20N Pro) (507646036502)....77
09 Traction Battery(24V20Ah)(PTE15N Pro)(507746037001)....79
10 Traction Battery(24V40Ah)(PTE15N Pro)(507746037002)....81
11 Traction Battery(24V40Ah)（PTE15N Pro）(507746037003)....83
12 Traction Battery(48V20Ah)(PTE20N Pro)(507646037001)....85
13 Traction Battery(48V20Ah)(PTE20N Pro)(507646037002)....87
Chapter 6: Special Parts....89
01 Load Backrest(507746040501)....89
02 Charging cabinets(PTE15N Pro)(507746040502)....91
03 Charging cabinets(PTE20N Pro)(507646040501)....93
04 Charging cabinets(PTE20N Pro)(507646040502)....95
Chapter 7: Others....97

01 Labels and Decals-EU(PTE15N Pro)(507746047001) 97
02 Labels and Decals-US(PTE15N Pro)(507746047002) 101
03 Labels and Decals-EU(PTE20N Pro)(507646047001) 105
04 Labels and Decals-US(PTE20N Pro)(507646047002) 107
Appendix.....109
01 Electrical Circuit Diagram(PTE15N Pro)(507746045501) 109
02 Electrical Circuit Diagram(PTE15N Pro)(507746045502) 110
03 Electrical Circuit Diagram(PTE15N Pro)(507746045503) 111
04 Electrical Circuit Diagram(PTE15N Pro)(507746045504) 112
05 Electrical Circuit Diagram(PTE20N Pro)(507646045501) 113
06 Electrical Circuit Diagram(PTE20N Pro)(507646045502) 114
07 Hydraulic Circuit Diagram(PTE15N Pro)(507746045505).....115
08 Hydraulic Circuit Diagram(PTE20N Pro)(507646045503).....116
09 Consumable Parts List 117

Chapter 1: Drive System

01 Drive Unit Steering(PTE15N Pro)(507746013501)

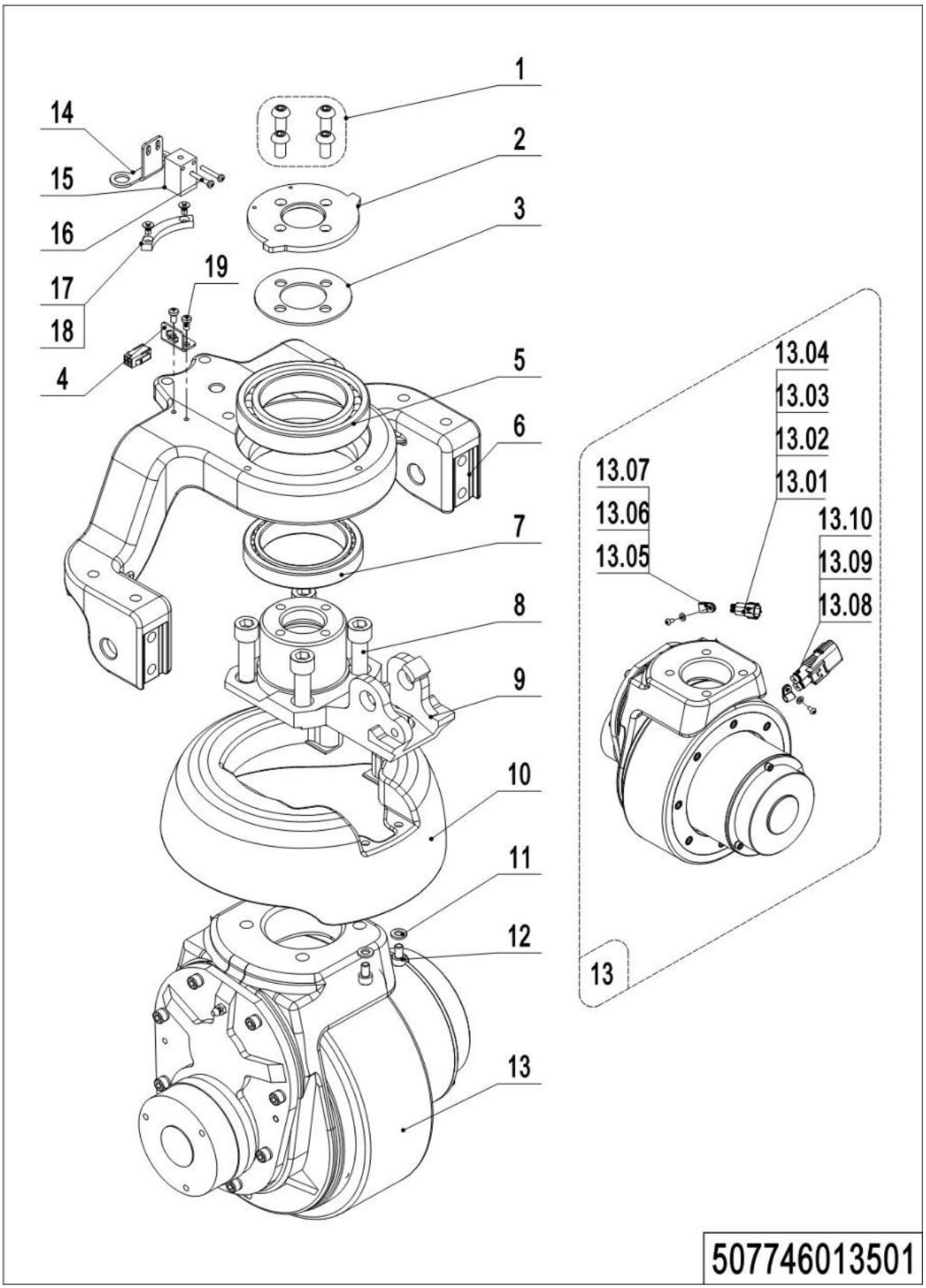

01 Drive Unit Steering(PTE15N Pro) (507746013501)

No.	Item Code	Mark	Item Description	Qty.	Substitute	Note
1	910200300024	1	Screw M8x16	4		
2	508013520003		Bearing Cap	1		
3	508013520004		Subplate	1		
4	507738520022	1	Mounting Plate	1		
5	910700200058	1	Bearing	1		
6	507913520000		Wheel Mount	1		
7	910700600044		Bearing	1		
8	910200200076	1	Screw M10x25	4		
9	508013520001		Flange	1		
10	508013520101		Cover	1		Be sure to color your order
11	910400100005	1	Flat Washer	2		
12	910200200033	1	Screw M6x12	2		
13	508013510002		Drive Kit	1		8NM,PU
13	508013510005		Drive Kit	1		8NM,PU(Anti-slip)
13.01	920400200004	1	Connector	1		
13.02	920400200003	1	Connector	1		
13.03	920400200017	1	Connector	2		
13.04	920400200018	1	Connector	2		
13.05	910200700001	1	Screw M4x10	2		
13.06	910400100003	1	Flat Washer	2		
13.07	921300200001		Cable Clamp	2		
13.08	920400200169	1	Connector	1		
13.09	920400200172	1	Connector	2		
13.10	920400200171	1	Connector	2		
14	508033020003		Bracket	1		
15	920200400017		Proximity Switch	1		
16	910200500015	1	Screw M3x20	2		
17	508033020002		Induction Block	1		
18	910200700001	1	Screw M4x10	2		
19	910200300016		Screw M6x10	2		

1= Supply as package. 2= Supply with constraints. 3= Phasing-out supply. 4= Supply as assembly. 5= Check other tables.

02 Drive Assembly(PTE15N Pro)(507746013001)

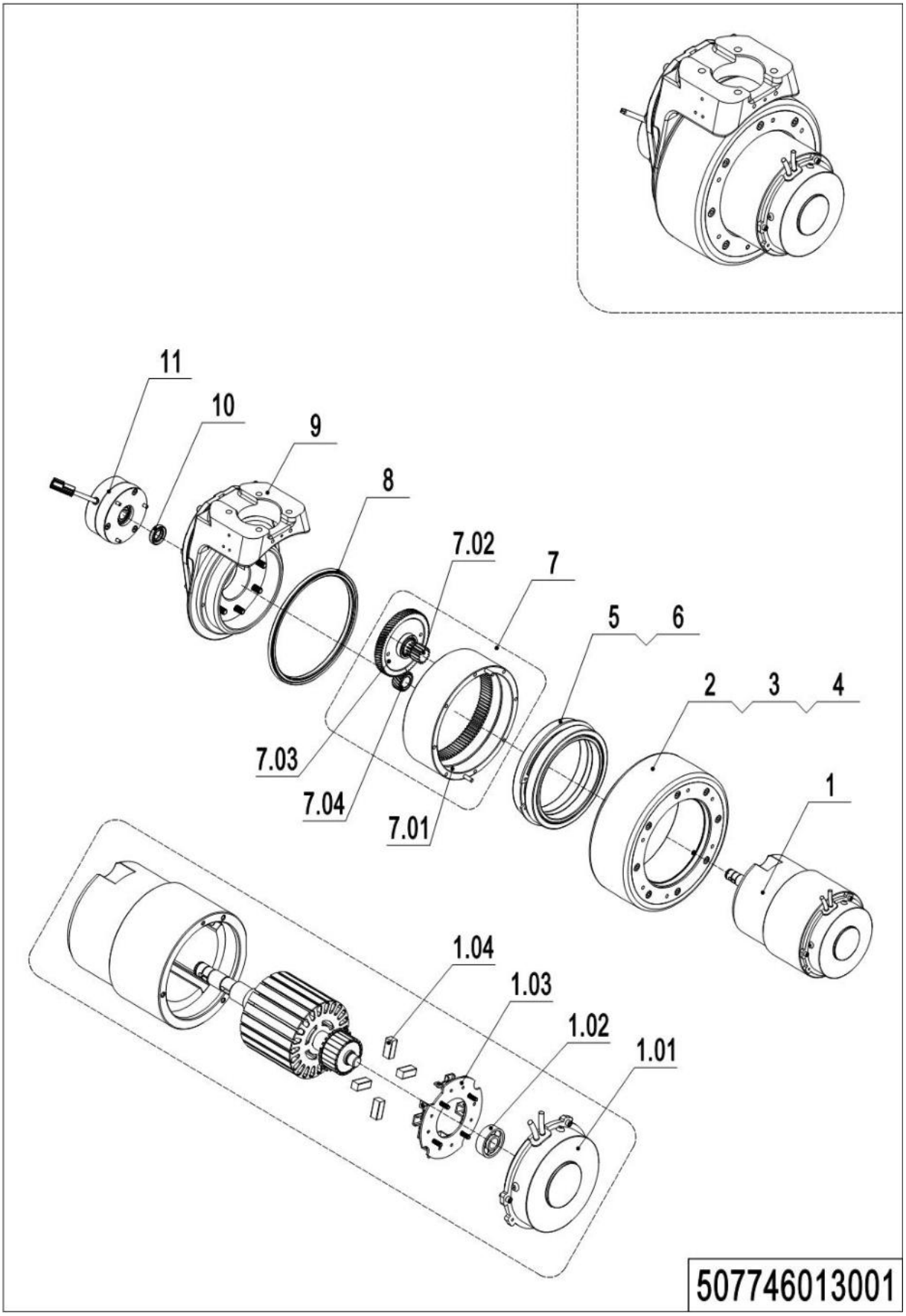

1= Supply as package. 2= Supply with constraints. 3= Phasing-out supply. 4= Supply as assembly. 5= Check other tables.

02 Drive Assembly(PTE15N Pro) (507746013001)

No.	Item Code	Mark	Item Description	Qty.	Substitute	Note
1	961004000012		Motor	1		
1.01	507798520022		End Cap	1		
1.02	507798520021		Bearing	1		
1.03	507798520024		Carbon Brush Holder	1		
1.04	507798520023		Carbon Brush	4		
2	961004000009		Drive Wheel	1		
2	961004200001		Drive Wheel	1		Anti-slip
3	961004000011		Oil Seal	1		
4	910200200167		Screw Kits M6x20	8		
5	910700200044		Bearing	2		
6	961004000007		Spacer Bush	1		
7	507798510006		Gear Kit	1		
7.01	961004000006		Gear	1		
7.02	961004000003		Gear Shaft	1		
7.03	961004000002		Gear	1		
7.04	961004000005		Gear	1		
8	961004000010		Oil Seal	1		
9	507798510007		Gearbox Shell	1		
10	961000700012		Oil Seal	1		
11	940700100015		Electromagnetic Brake	1		

1= Supply as package. 2= Supply with constraints. 3= Phasing-out supply. 4= Supply as assembly. 5= Check other tables.

03 Drive Unit Steering(PTE20N Pro)(507646013501)

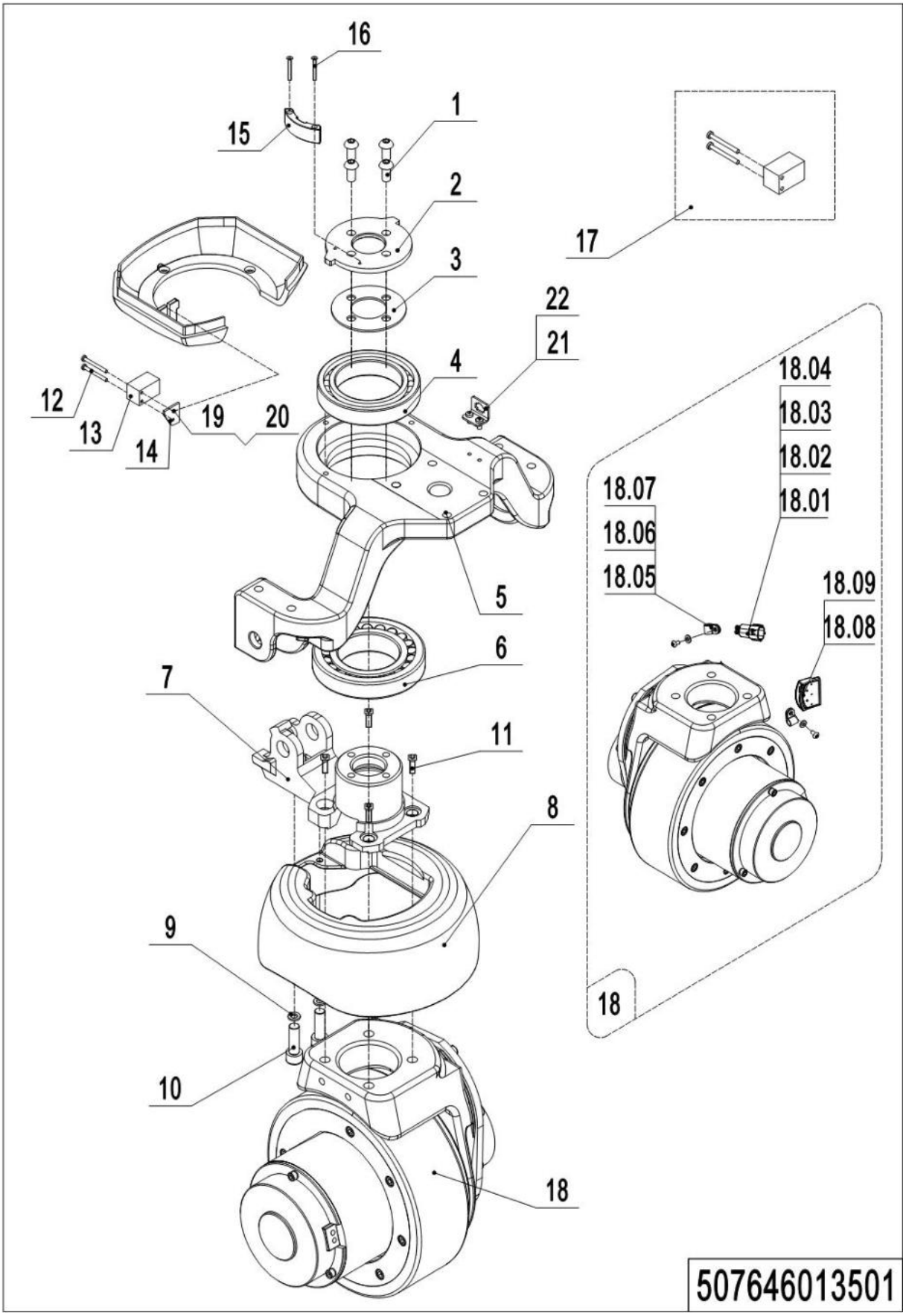

03 Drive Unit Steering(PTE20N Pro) (507646013501)

No.	Item Code	Mark	Item Description	Qty.	Substitute	Note
1	910200300024	1	Screw M8x16	4		
2	508513520002		Bearing Cap	1		
3	508013520004		Subplate	1		
4	910700200058		Bearing	1		
5	508513520001		Wheel Mount	1		
6	910700600044		Bearing	1		
7	508513520000		Flange	1		
8	508013520101		Cover	1		Be sure to color your order
9	910400100005	1	Flat Washer	4		
10	910200200032	1	Screw M6x10	2		
11	910200200076	1	Screw M10x25	4		
12	910200200007	1	Screw M3x25	2		
13	920200400025		Proximity Switch	1		
14	508533020001		Mounting Plate	1		
15	508533020000		Induction Block	1		
16	910200500015	1	Screw M3x20	2		
17	508598510002		Proximity Switch Kit	1		
18	508513510000		Drive Kit	1		
18	508513510001		Drive Kit	1		Anti-slip
18.01	920400200001		Connector	1		
18.02	920400200019		Connector	2		
18.03	920400200018		Connector	2		
18.04	920400200002		Connector	1		
18.05	921300200001		Cable Clamp	2		
18.06	910200200012	1	Screw M4x8	2		
18.07	910400100003	1	Flat Washer	2		
18.08	920400200160		Connector	1		
18.09	920400200161		Connector	1		
19	910400100003	1	Flat Washer	1		

1= Supply as package. 2= Supply with constraints. 3= Phasing-out supply. 4= Supply as assembly. 5= Check other tables.

03 Drive Unit Steering(PTE20N Pro) (507646013501) Continuation

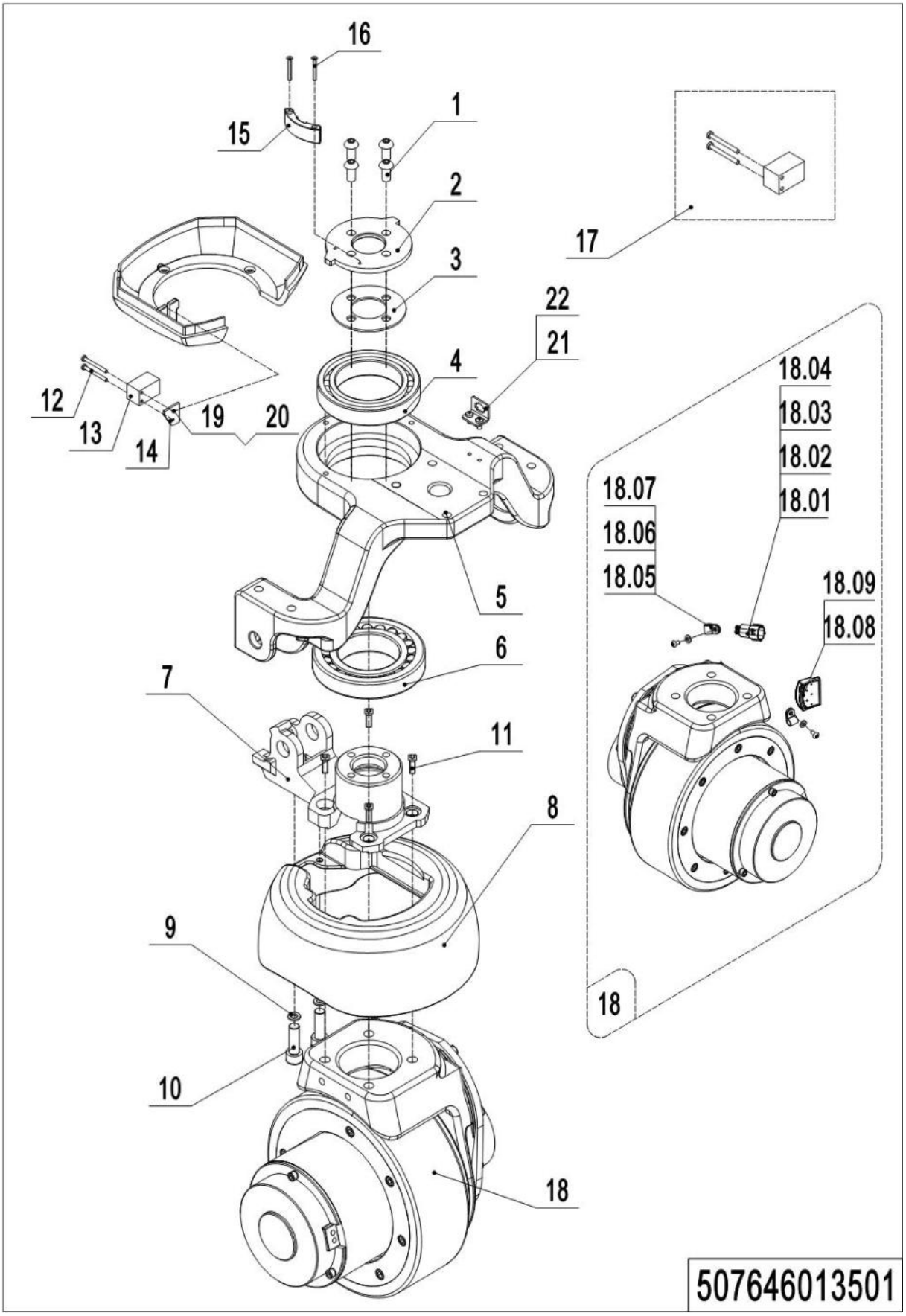

03 Drive Unit Steering(PTE20N Pro) (507646013501) Continuation

No.	Item Code	Mark	Item Description	Qty.	Substitute	Note
20	910200300005	1	Screw M4x8	1		
21	507738520022		Mounting Plate	1		
22	910200300016		Screw M6x10	2		

1= Supply as package. 2= Supply with constraints. 3= Phasing-out supply. 4= Supply as assembly. 5= Check other tables.

04 Drive Assembly(PTE20N Pro)(507646013001)

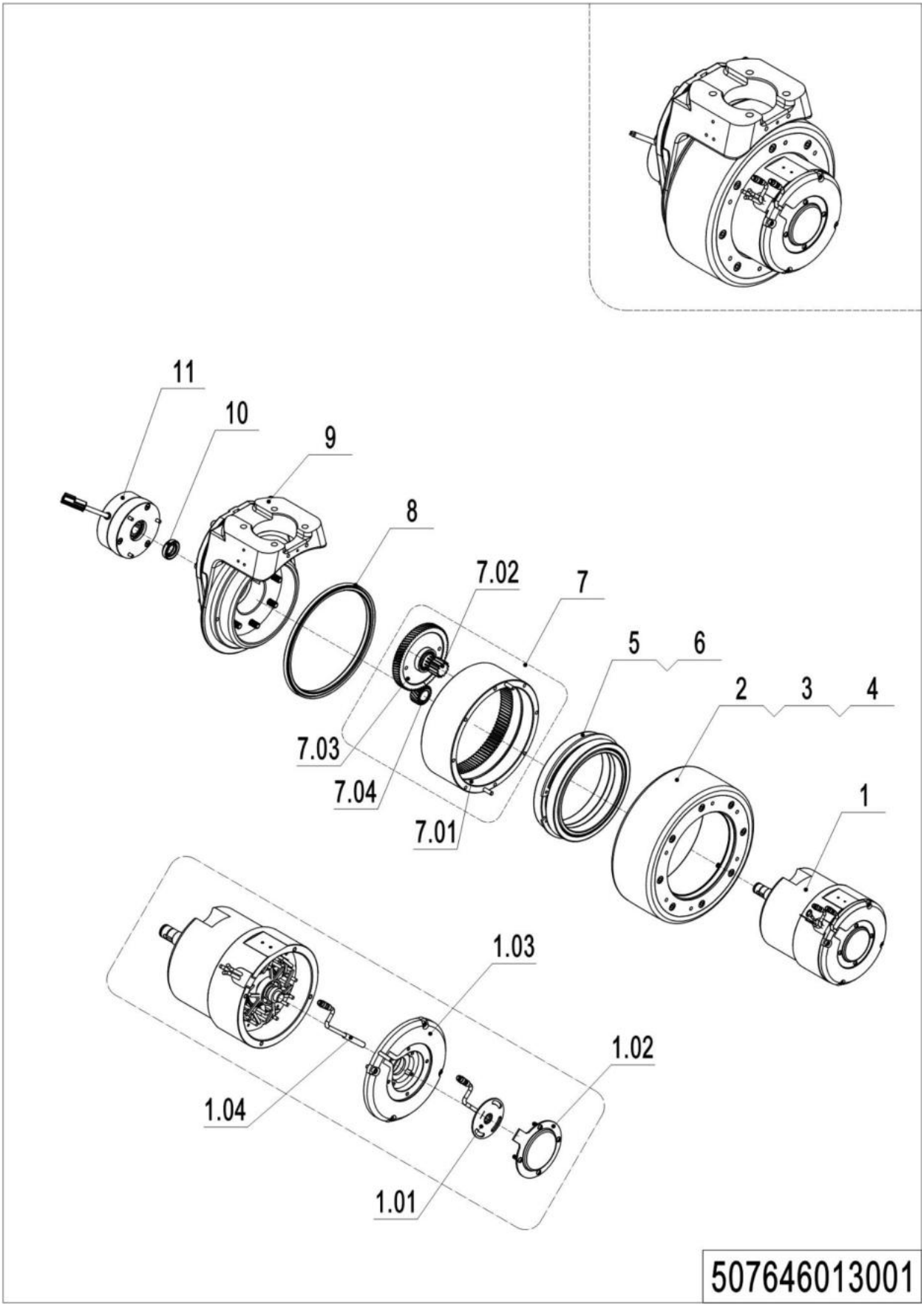

1= Supply as package. 2= Supply with constraints. 3= Phasing-out supply. 4= Supply as assembly. 5= Check other tables.

04 Drive Assembly (PTE20N Pro)(507646013001)

No.	Item Code	Mark	Item Description	Qty.	Substitute	Note
1	961004300001		Motor	1		
1.01	961001800002		Sensor	1		
1.02	961001800003		Close Plate	1		
1.03	961001800004		End Cap	1		
1.04	961001800005		Sensor	1		
2	961004000009		Drive Wheel	1		
2	961004200001		Drive Wheel	1		Anti-slip
3	961004000011		Oil Seal	1		
4	910200200167		Screw Kits M6x20	8		
5	910700200044		Bearing	2		
6	961004000007		Spacer Bush	1		
7	507798510006		Gear Kit	1		
7.01	961004000006		Gear	1		
7.02	961004000003		Gear Shaft	1		
7.03	961004000002		Gear	1		
7.04	961004000005		Gear	1		
8	961004000010		Oil Seal	1		
9	507798510007		Gearbox Shell	1		
10	961000700012		Oil Seal	1		
11	940700100015		Electromagnetic Brake	1		

1= Supply as package. 2= Supply with constraints. 3= Phasing-out supply. 4= Supply as assembly. 5= Check other tables.

Chapter 2: Hydraulic System

01 Hydraulic Components(PTE15N Pro)(507746023501)

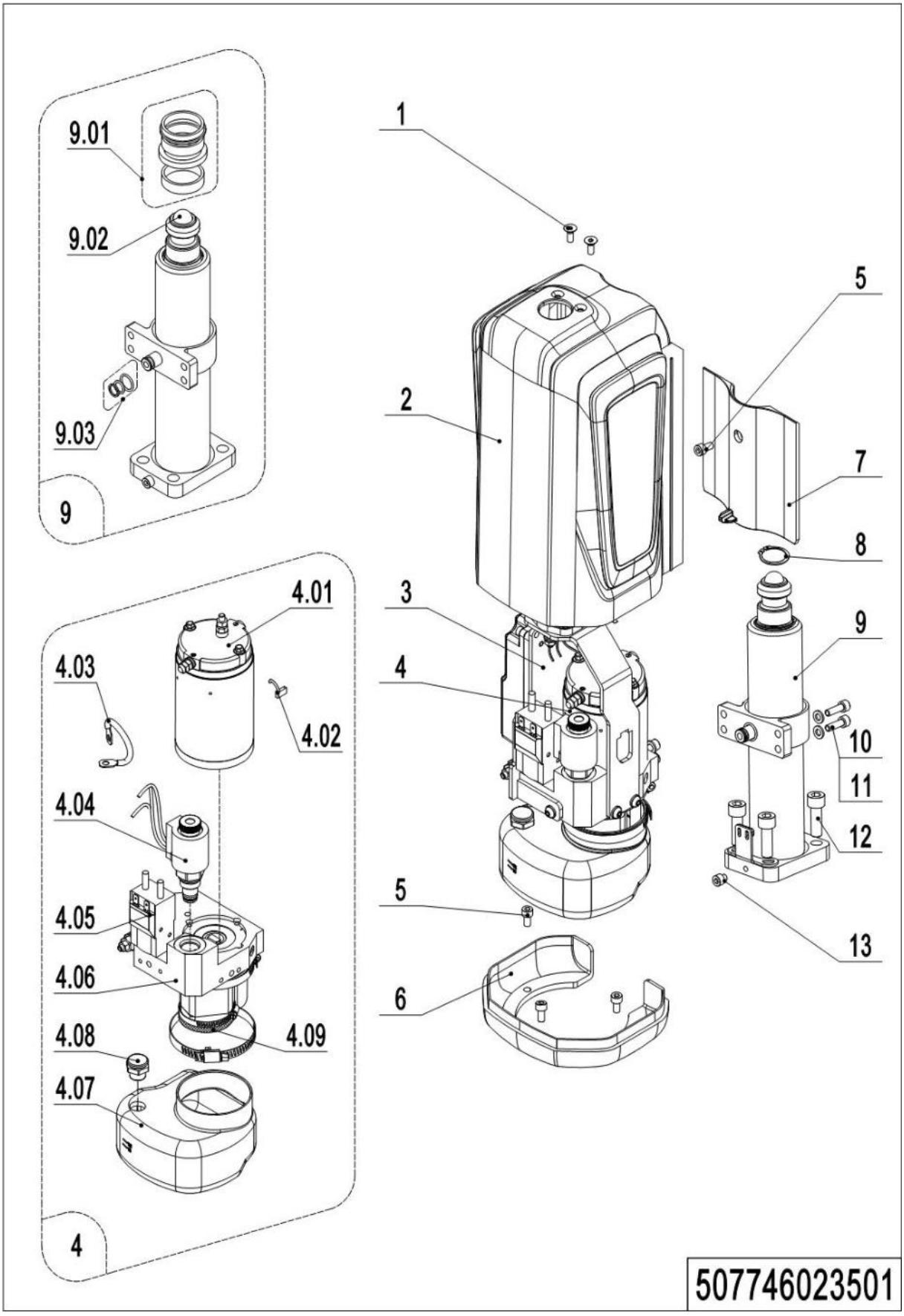

01 Hydraulic Components(PTE15N Pro)(507746023502)

No.	Item Code	Mark	Item Description	Qty.	Substitute	Note
1	910200400053	1	Screw M6x16	2		
2	507724010090		Cover Kit	1		Be sure to color your order
3	508024010007		Mounting Rack	1		
4	950900100124		Pump Unit	1		
4.01	508098510107	2	Motor	1		
4.02	508098520008	2	Brush	1		
4.03	508098520007	2	Cables	1		
4.04	508098510034	2	Magnetic Valve Kit	1		
4.05	508098510021	2	Switch	1		
4.06	508098510108	2	Gear Pump Kit	1		
4.07	508098510011	2	Tank	1		
4.08	508598510009	2	Cap-Tank	1		
4.09	508098520037	2	Filter	1		
5	910200200033	1	Screw M6x12	4		
6	507724020092		Pedestal	1		Be sure to color your order
7	508024020104		Cylinder Cover	1		Be sure to color your order
8	910401300017	1	Circlip	1		
9	508024010003		Cylinder Assembly	1		
9.01	508098510018		Seal Kit	1		
9.02	910701100019		Steel Ball	1		
9.03	508598510004		Seal Kit	1		
10	910200200036	1	Screw M6x20	7		
11	910400100005	1	Flat Washer	7		
12	910200200077	1	Screw M10x30	4		
13	910200200160	1	Screw M6x6	1		

1= Supply as package. 2= Supply with constraints. 3= Phasing-out supply. 4= Supply as assembly. 5= Check other tables.

02 Hydraulic Components(PTE20N Pro)(507646023502)

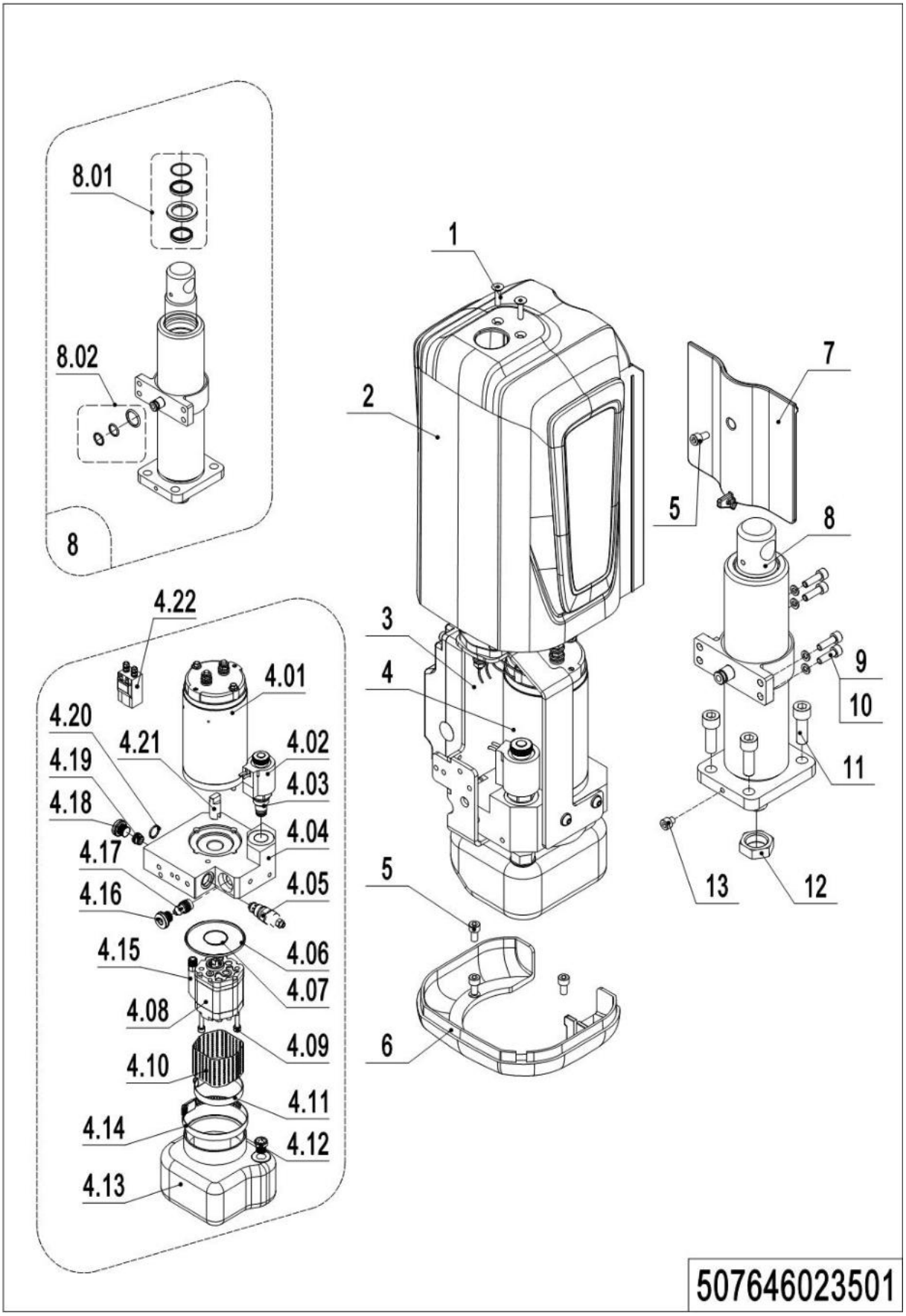

1= Supply as package. 2= Supply with constraints. 3= Phasing-out supply. 4= Supply as assembly. 5= Check other tables.

02 Hydraulic Components(PTE20N Pro)(507646023501)

No.	Item Code	Mark	Item Description	Qty.	Substitute	Note
1	910200400052		Screw M6x20	2		
2	507624010090		Cover Kit	1		Be sure to color your order
3	508524010003		Mounting Rack	1		
4	950900100057		Pump Unit	1		
4.01	508598510007		Motor	1		MD48080AN
4.02	508598520001		Coil	1		YC048DC
4.03	505698520054		Magnetic Valve Element	1		SCV
4.04	508598520002		Valve Block	1		CMB3-101-66E
4.05	504498510015		Overflow Valve	1		RV-06
4.06	508598520003		O-Ring	1		67.95x2.62
4.07	910800100063		O-Ring	1		21.2x1.8
4.08	508598510008		Gear Pump	1		CBU-F1038
4.09	508598520004	1	Screw M5x60	2		M5x60
4.10	508598520005		Filter	1		59-30
4.11	508598520006		Hoop	1		KG02
4.12	508598510009		Cap-Tank	1		Z3/8
4.13	508598510010		Tank	1		0.4L-TP072A080-V
4.14	508598520007		Hoop	1		KG04
4.15	508598520008		Return Pipe	1		RU10-060
4.16	505698520043		End Cap	1		SP-09
4.17	505698520041		Valve	1		RPCV-02-04
4.18	505698520037		End Cap	1		SP-02
4.19	505698520038		Check Valve	1		CV-03
4.20	910800100098		O-Ring	1		13.5x1.8
4.21	508598520009		Coupling	1		DCP-312
4.22	508598520011		Switch	1		DK0148B
5	910200200033		Screw M6x12	4		
6	507624020099		Pedestal	1		Be sure to color your order
7	508524020011		Cylinder Cover	1		Be sure to color your order
8	508524010000		Cylinder Assembly	1		

1= Supply as package. 2= Supply with constraints. 3= Phasing-out supply. 4= Supply as assembly. 5= Check other tables.

02 Hydraulic Components (PTE20N Pro)(507646023501) continuation

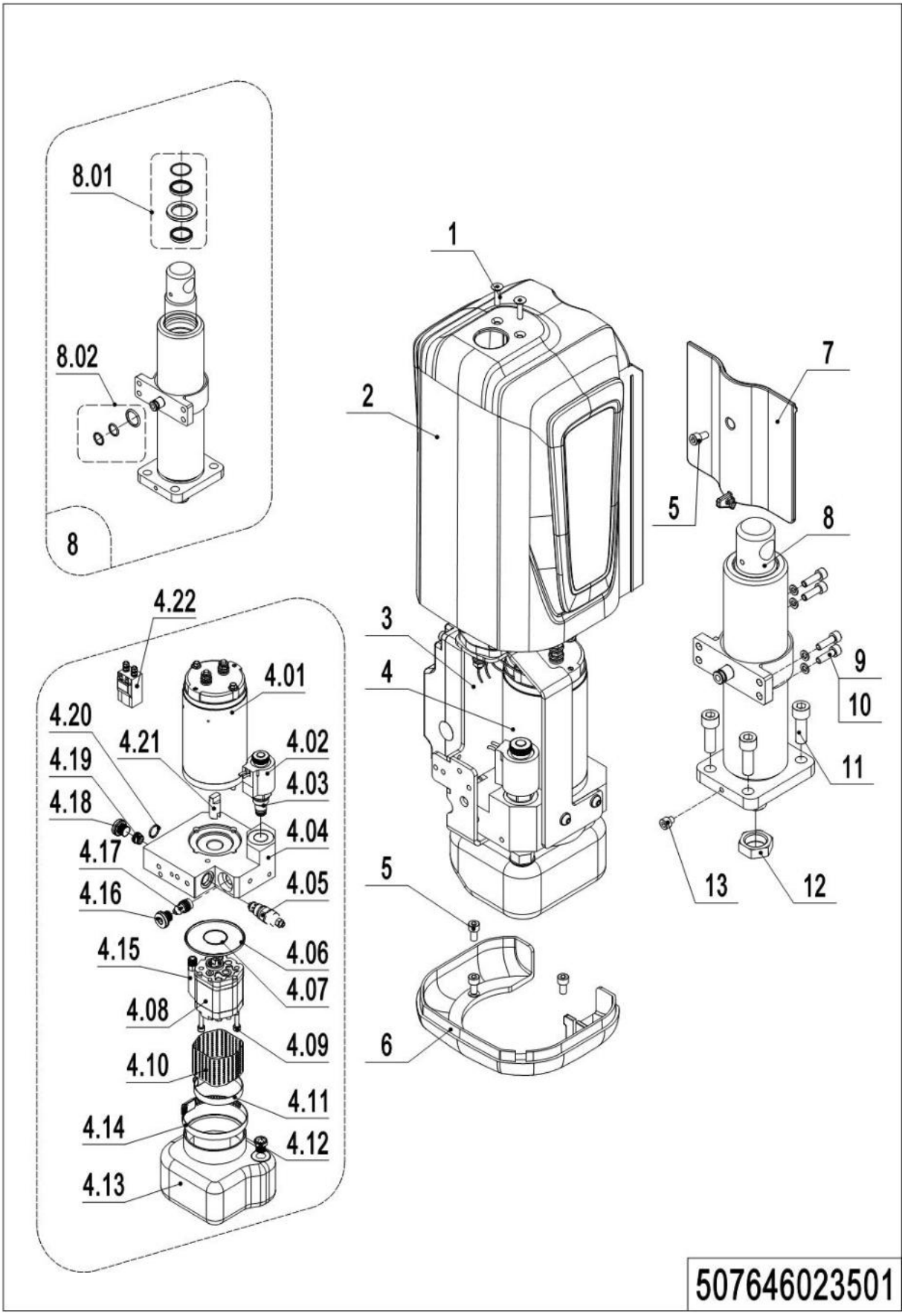

02 Hydraulic Components (PTE20N Pro)(507646023501) continuation

No.	Item Code	Mark	Item Description	Qty.	Substitute	Note
8.01	508598510005		Seal Kit	1		
8.02	508598510004		Seal Kit	1		
9	910200200036	1	Screw M6x20	4		
10	910400100005	1	Flat Washer	8		
11	910200200078	1	Screw M10x35	4		
12	910300400008		Nut	1		
13	910200200160	1	Screw M6x6	1		

Chapter 3: Truck Frame

01 Truck Frame(PTE15N Pro) (507746038501)

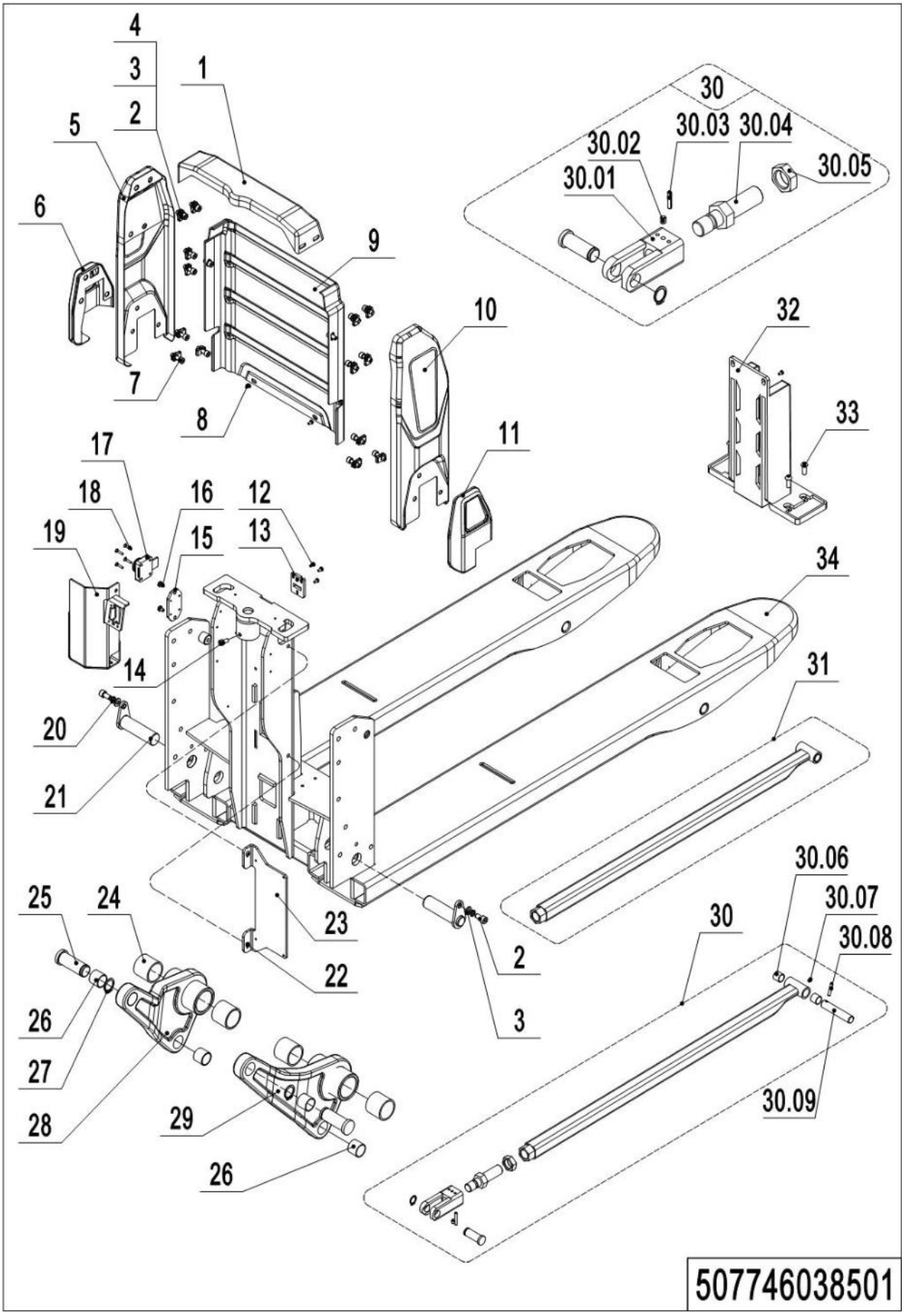

01 Truck Frame(PTE15N Pro) (507746038501)

No.	Item Code	Mark	Item Description	Qty.	Substitute	Note
1	507738520081		Cover	1		Be sure to color your order
2	910200200055	1	Screw M8x16	8		
3	910400100021		Flat Washer	8		
4	940400400002		Cage Nut	14		
5	507738510094		Cover	1		Be sure to color your order
5	507738510096		Cover	1		Fork height 75mm optional
6	507738510090		Cover	1		Be sure to color your order
7	910200200157		Screw M8x25	10		
8	910200300017	1	Screw M6x12	2		
9	507738520080		Front Panel	1		Be sure to color your order
10	507738510095		Cover	1		Be sure to color your order
10	507738510097		Cover	1		Fork height 75mm optional
11	507738510091		Cover	1		Be sure to color your order
12	910200500034	1	Screw M4x8	3		
13	508038520109		Lock Catch	1		
14	910200200171		Screw M6x10	1		
15	507738520009		Mounting Plate	1		
16	910203100001		Screw M6x10	2		
17	507738510051		Coded Lock	1		
18	910203000001		Screw M4x20	4		
19	507738510054		Wire Box	1		
20	910400500006		Spring Washer	2		
21	507738510050	1	Pin	2		
22	910200200013		Screw M4x10	2		
23	507738520017		Mounting Plate	1		
24	940500100097		Bushing	4		
25	508038520041		Pin	4		
26	940500100083		Bushing	4		
27	910401300007		Circlip	4		
28	510838510003		Rise Arm	1		

1= Supply as package. 2= Supply with constraints. 3= Phasing-out supply. 4= Supply as assembly. 5= Check other tables.

01 Truck Frame(PTE15N Pro)(507746038501) Continuation

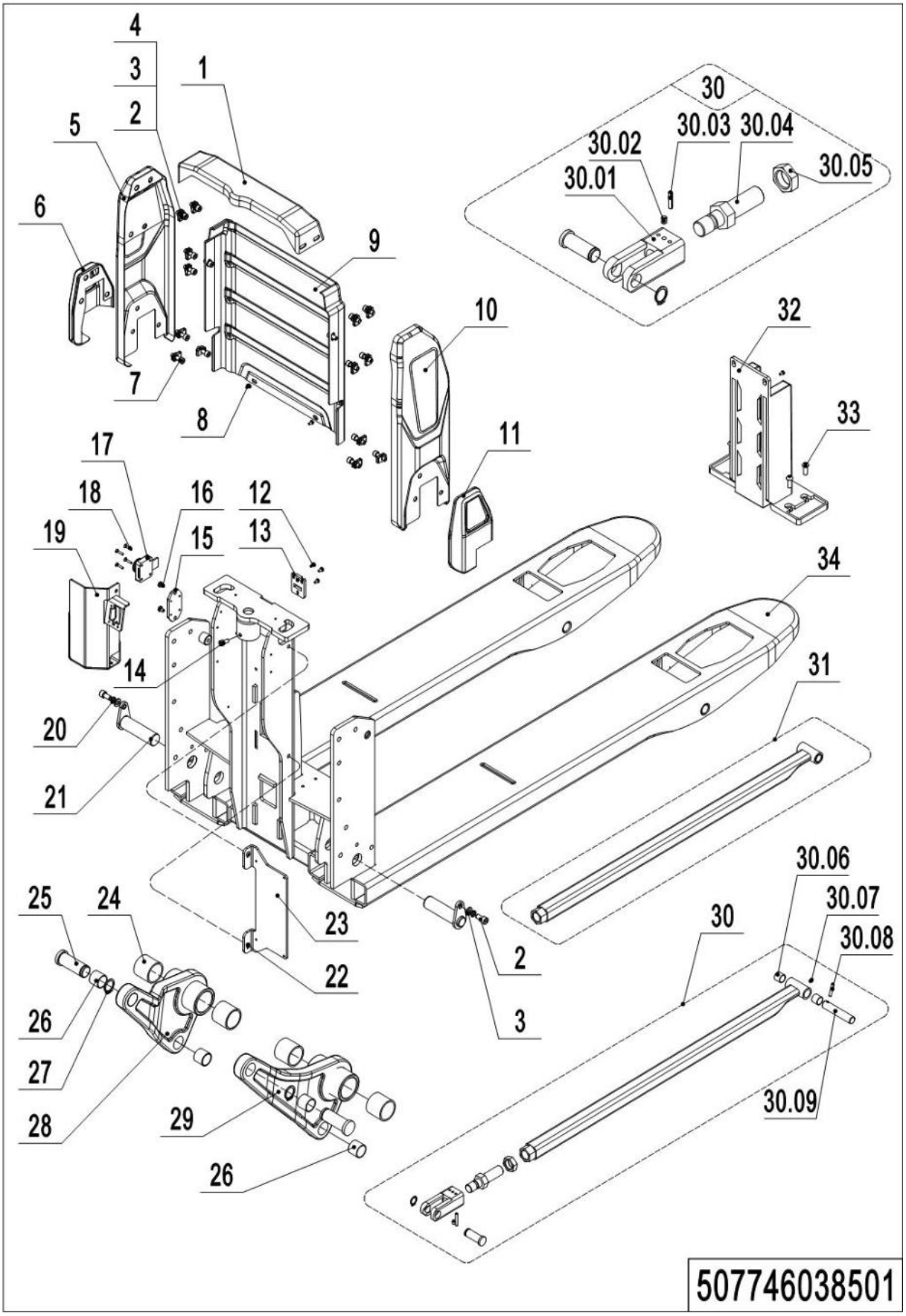

01 Truck Frame(PTE15N Pro)(507746038501) Continuation

No.	Item Code	Mark	Item Description	Qty.	Substitute	Note
29	510838510002		Rise Arm	1		
30	508098510038		Push Rod Kit(800)	2		
30	508098510006		Push Rod Kit(915)	2		
30	508098510043		Push Rod Kit(1000)	2		
30	508098510122		Push Rod Kit(1070)	2		
30	507798510002		Push Rod Kit(1150)	2		
30	508098510044		Push Rod Kit(1220)	2		
30.01	508038520028		Push Rod Fork	2		
30.02	910201000005	1	Screw M6x8	2		
30.03	910600500001	1	Spring Pin 4x32	4		
30.04	508038520029		Adjusting Rod	2		
30.05	910300400008	1	Nut	2		
30.06	940500100083		Bushing	4		
30.07	911200100001	1	Oil Cup	2		
30.08	910600500002	1	Spring Pin 5x28	2		
30.09	502338520030		Push Rod Axle	2		
31	508038510016	2	Push Rod (800)	2		
31	508038510014	2	Push Rod (915)	2		
31	508038510017	2	Push Rod (1000)	2		
31	508038530018	2	Push Rod (1070)	2		
31	508038510011	2	Push Rod (1150)	2		
31	508038510024	2	Push Rod (1220)	2		
32	920600100436		Guiding Column	1		
33	910200300018		Screw M6x16	6		
34	507738510005	2	Chassis(540x800)	1		
34	507738510007	2	Chassis(540x915)	1		
34	507738510009	2	Chassis(540x1000)	1		
34	507738510011	2	Chassis(540x1070)	1		
34	507738510001	2	Chassis(540x1150)	1		
34	507738510003	2	Chassis(540x1220)	1		
34	507738510104	2	Chassis(75mm,540x800)	1		Fork height 75mm optional

01 Truck Frame(PTE15N Pro)(507746038501) Continuation

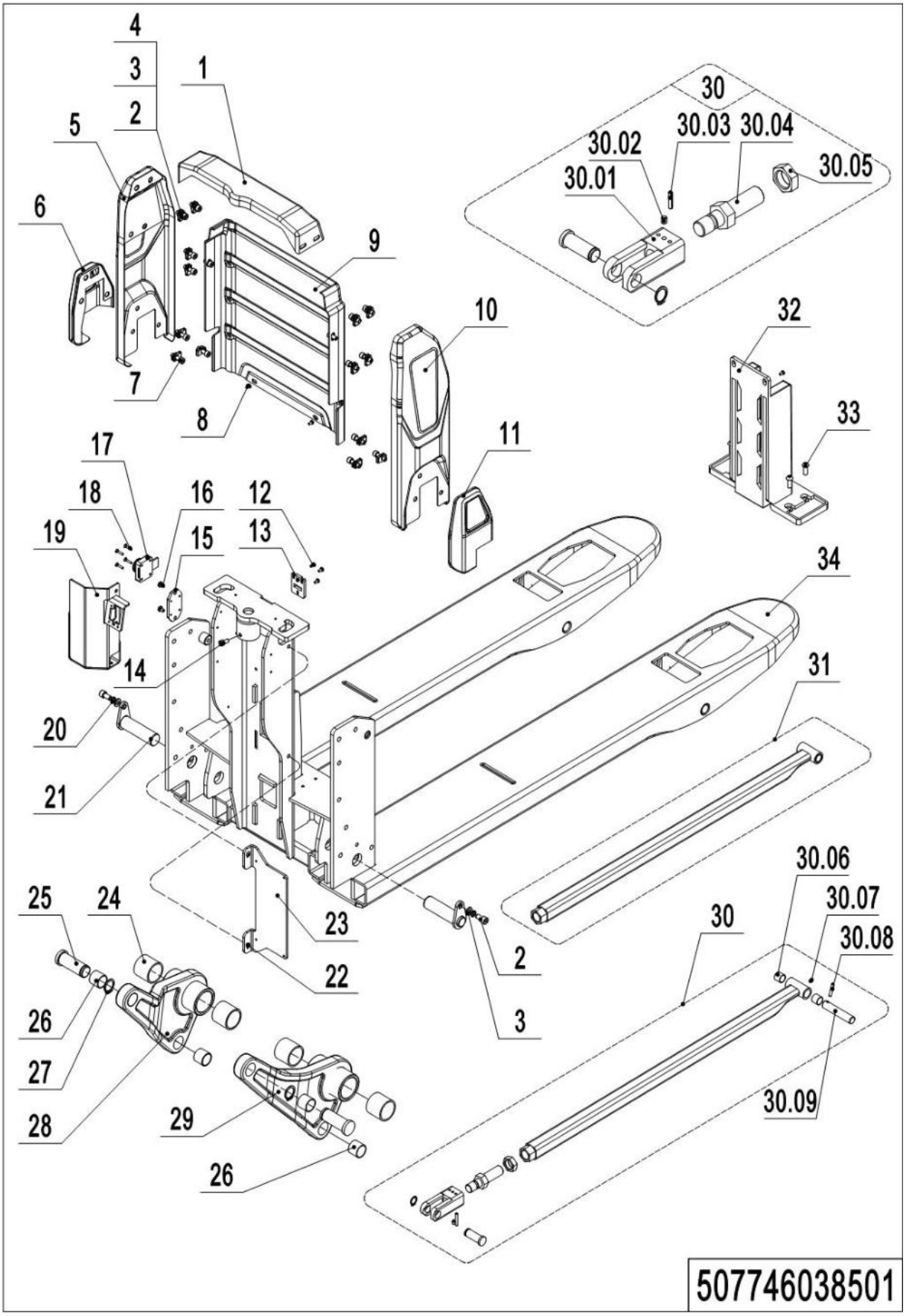

01 Truck Frame(PTE15N Pro)(507746038501) Continuation

No.	Item Code	Mark	Item Description	Qty.	Substitute	Note
34	507738510106	2	Chassis(75mm,540x915)	1		Fork height 75mm optional
34	507738510108	2	Chassis(75mm,540x1000)	1		Fork height 75mm optional
34	507738510110	2	Chassis(75mm,540x1070)	1		Fork height 75mm optional
34	507738510100	2	Chassis(75mm,540x1150)	1		Fork height 75mm optional
34	507738510102	2	Chassis(75mm,540x1220)	1		Fork height 75mm optional

02 Truck Frame(PTE15N Pro) (507746038502)

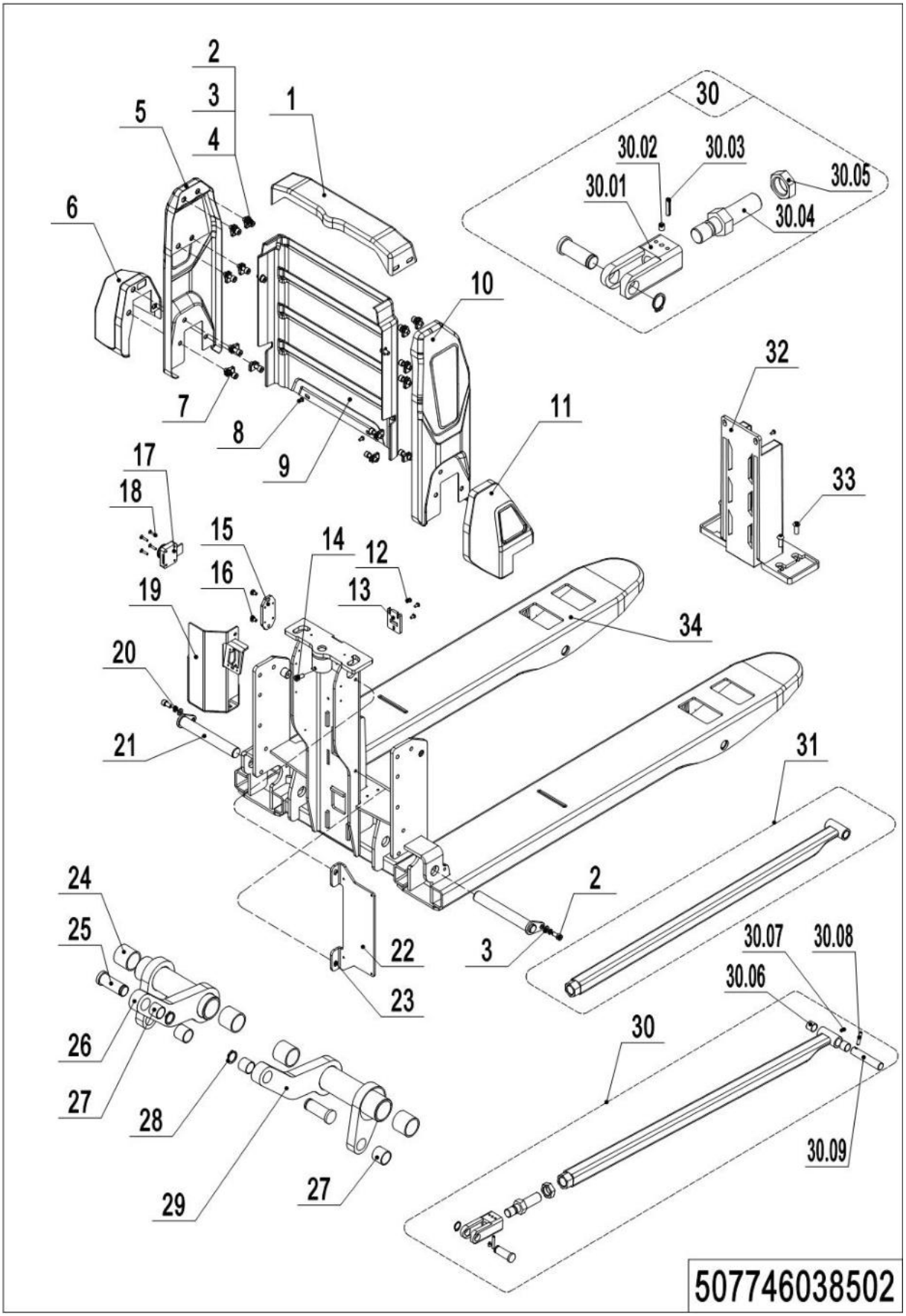

1= Supply as package. 2= Supply with constraints. 3= Phasing-out supply. 4= Supply as assembly. 5= Check other tables.

02 Truck Frame(PTE15N Pro) (507746038502)

No.	Item Code	Mark	Item Description	Qty.	Substitute	Note
1	507738520081		Cover	1		
2	910200200055	1	Screw M8x16	8		
3	910400100021		Flat Washer	8		Be sure to color your order
4	940400400002		Cage Nut	14		Be sure to color your order
5	507738510094		Cover	1		
5	507738510096		Cover	1		Fork height 75mm optional
6	507738510092		Cover	1		
7	910200200157		Screw M8x25	10		
8	910200300017	1	Screw M6x12	2		Be sure to color your order
9	507738520080		Front Panel	1		Be sure to color your order
10	507738510095		Cover	1		
10	507738510097		Cover	1		Fork height 75mm optional
11	507738510093		Cover	1		
12	910200500034	1	Screw M4x8	3		
13	508038520109		Lock Catch	1		
14	910200200171		Screw M6x10	1		
15	507738520009		Mounting Plate	1		
16	910203100001		Screw M6x10	2		
17	507738510051		Coded Lock	1		
18	910203000001		Screw M4x20	4		
19	507738510054		Wire Box	1		
20	910400500006		Spring Washer	2		
21	507738510053		Pin	2		
22	507738520017		Mounting Plate	1		
23	910200200013		Screw M4x10	2		
24	940500100097		Bushing	4		
25	508038520041		Pin	4		
26	510838510005		Rise Arm	1		
27	940500100083		Bushing	8		
28	910401300007		Circlip	4		
29	510838510004		Rise Arm	1		

1= Supply as package. 2= Supply with constraints. 3= Phasing-out supply. 4= Supply as assembly. 5= Check other tables.

02 Truck Frame(PTE15N Pro) (507746038502) Continuation

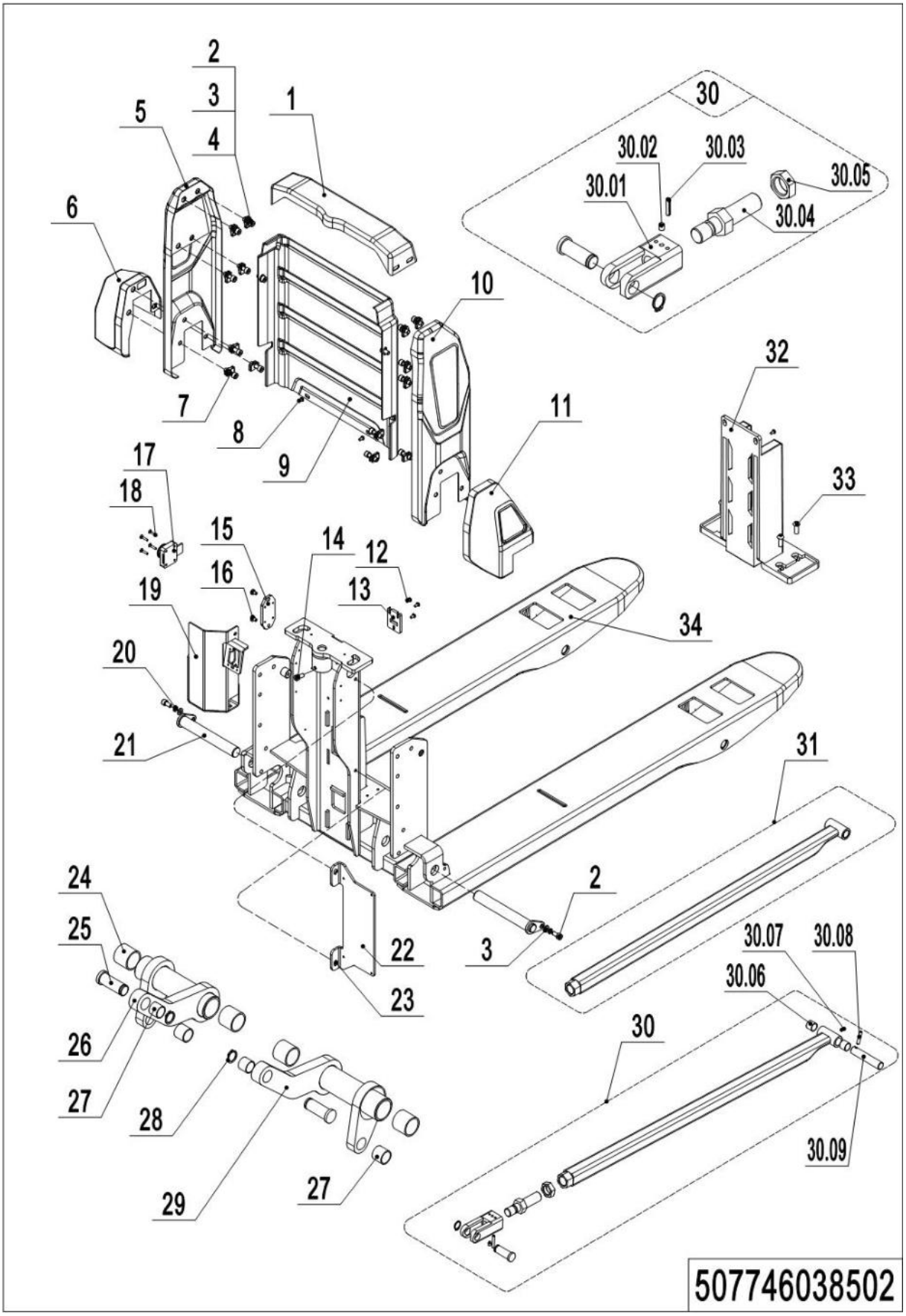

02 Truck Frame(PTE15N Pro) (507746038502) Continuation

No.	Item Code	Mark	Item Description	Qty.	Substitute	Note
30	508098510038		Push Rod Kit(800)	2		
30	508098510006		Push Rod Kit(915)	2		
30	508098510043		Push Rod Kit(1000)	2		
30	508098510122		Push Rod Kit(1070)	2		
30	507798510002		Push Rod Kit(1150)	2		
30	508098510044		Push Rod Kit(1220)	2		
30.01	508038520028		Push Rod Fork	2		
30.02	910201000005	1	Screw M6x8	2		
30.03	910600500001	1	Spring Pin 4x32	4		
30.04	508038520029		Adjusting Rod	2		
30.05	910300400008	1	Nut	2		
30.06	940500100083		Bushing	4		
30.07	911200100001	1	Oil Cup	2		
30.08	910600400024	1	Spring Pin 5x28	2		
30.09	502338520030		Push Rod Axle	2		
31	508038510016	2	Push Rod (800)	2		
31	508038510014	2	Push Rod (915)	2		
31	508038510017	2	Push Rod (1000)	2		
31	508038530018	2	Push Rod (1070)	2		
31	508038510011	2	Push Rod (1150)	2		
31	508038510024	2	Push Rod (1220)	2		
32	920600100436		Guiding Column	1		
33	910200300018		Screw M6x16	6		
34	507738510006	2	Chassis(685x800)	1		
34	507738510008	2	Chassis(685x915)	1		
34	507738510010	2	Chassis(685x1000)	1		
34	507738510012	2	Chassis(685x1070)	1		
34	507738510002	2	Chassis(685x1150)	1		
34	507738510004	2	Chassis(685x1220)	1		
34	507738510105	2	Chassis(75mm,685x800)	1		Fork height 75mm optional
34	507738510107	2	Chassis(75mm,685x915)	1		Fork height 75mm optional

---

1= Supply as package. 2= Supply with constraints. 3= Phasing-out supply. 4= Supply as assembly. 5= Check other tables.

02 Truck Frame(PTE15N Pro) (507746038502) Continuation

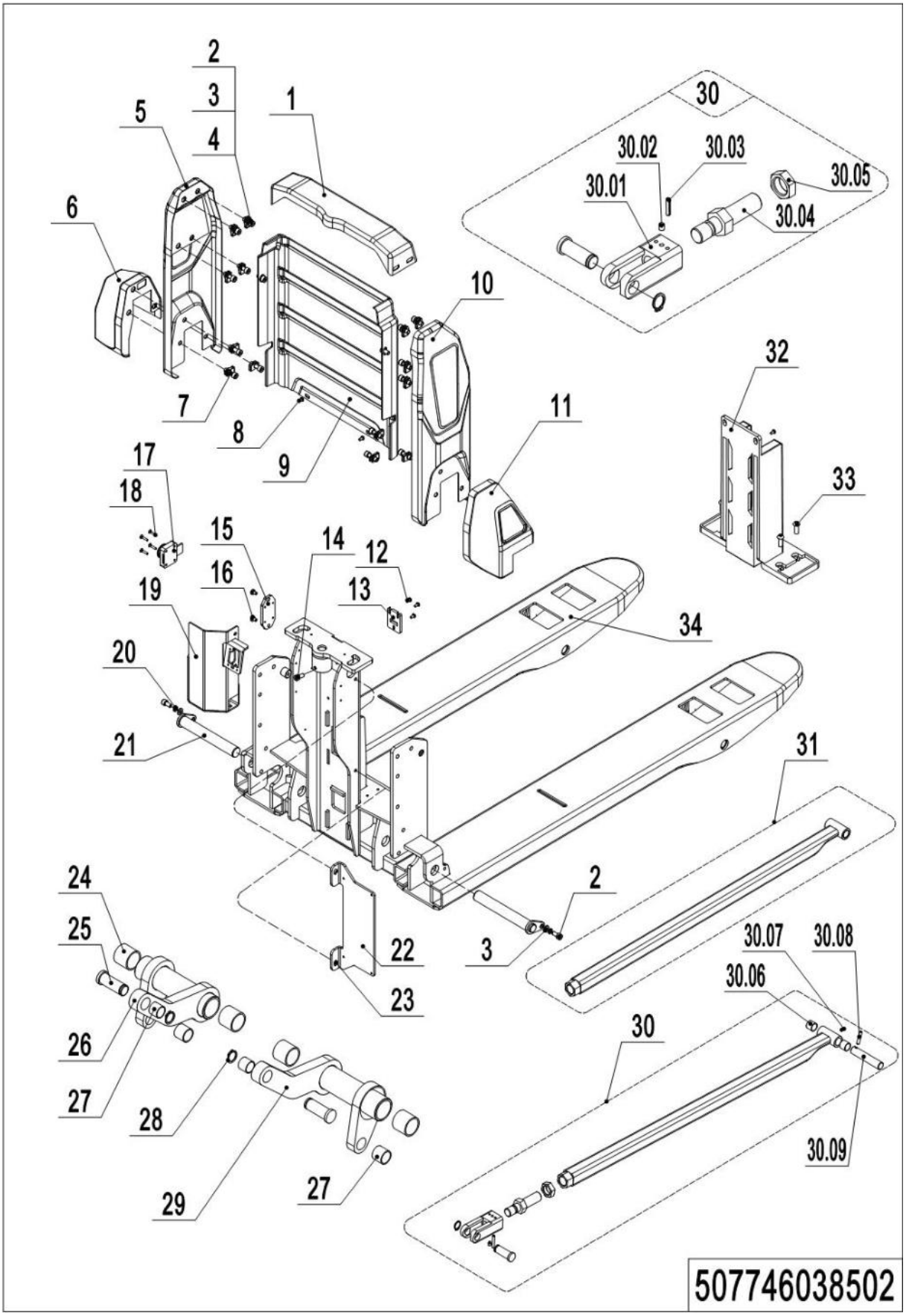

02 Truck Frame(PTE15N Pro) (507746038502) Continuation

No.	Item Code	Mark	Item Description	Qty.	Substitute	Note
34	507738510109	2	Chassis(75mm,685x1000)	1		Fork height 75mm optional
34	507738510110	2	Chassis(75mm,540x1070)	1		Fork height 75mm optional
34	507738510101	2	Chassis(75mm,685x1150)	1		Fork height 75mm optional
34	507738510103	2	Chassis(75mm,685x1220)	1		Fork height 75mm optional

03 Truck Frame(PTE20N Pro)(507646038501)

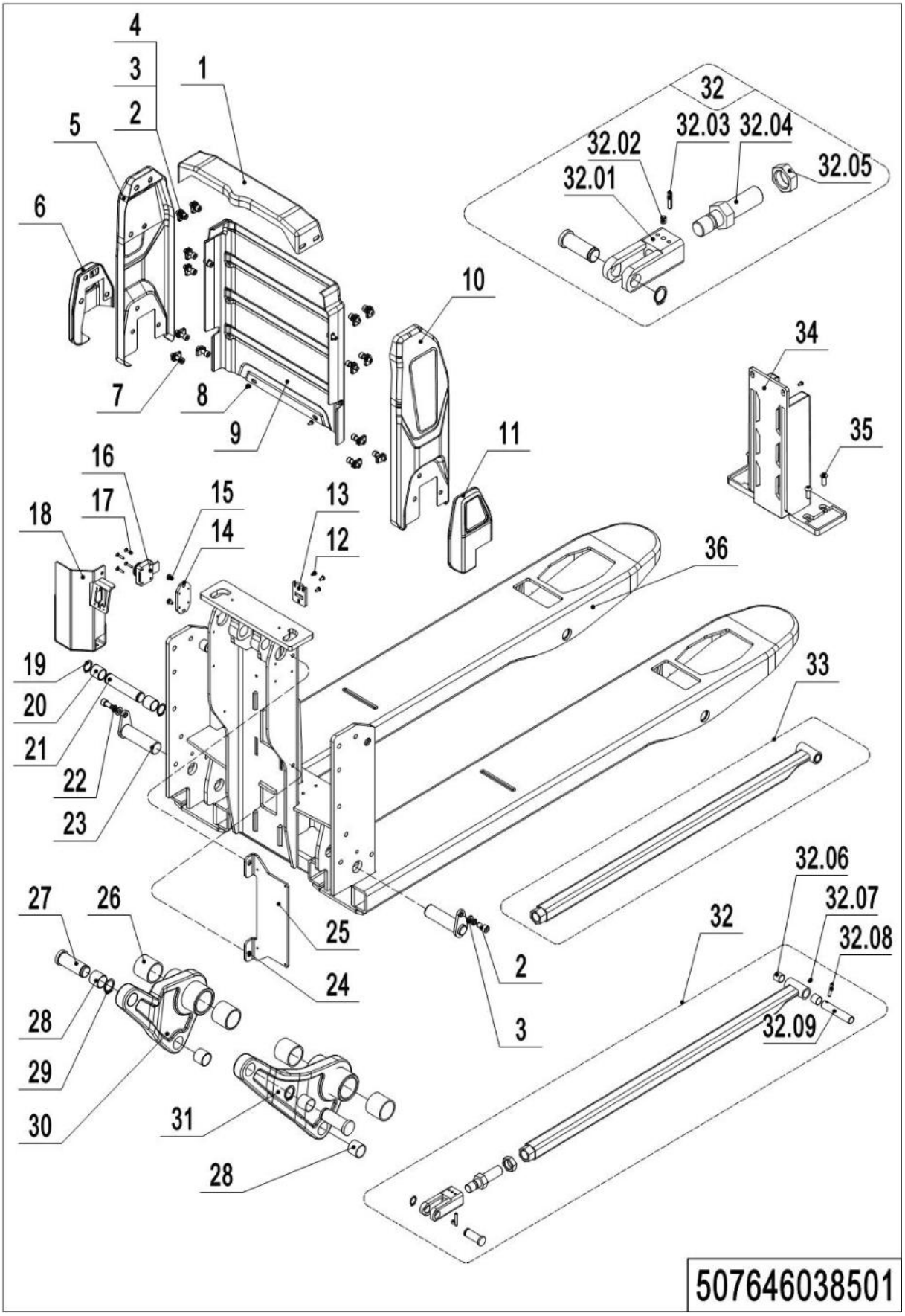

03 Truck Frame(PTE20N Pro)(507646038501)

No.	Item Code	Mark	Item Description	Qty.	Substitute	Note
1	507738520081		Cover	1		Be sure to color your order
2	910200200055	1	Screw M8x16	8		
3	910400100021		Flat Washer	8		
4	940400400002		Cage Nut	14		
5	507738510094		Cover	1		Be sure to color your order
6	507738510090		Cover	1		Be sure to color your order
7	910200200157		Screw M8x25	10		
8	910200300017	1	Screw M6x12	2		
9	507738520080		Front Panel	1		
10	507738510095		Cover	1		Be sure to color your order
11	507738510091		Cover	1		Be sure to color your order
12	910200500034	1	Screw M4x8	3		
13	508038520109		Lock Catch	1		
14	507738520009		Mounting Plate	1		
15	910203100001		Screw M6x10	2		
16	507738510051		Coded Lock	1		
17	910203000001		Screw M4x20	4		
18	507738510054		Wire Box	1		
19	910401300011		Circlip	2		
20	940500100096		Bushing	2		
21	508538520016		Pin	1		
22	910400500006		Spring Washer	2		
23	507738510050		Pin	2		
24	910200200013		Screw M4x10	2		
25	507738520017		Mounting Plate	1		
26	940500100097		Bushing	4		
27	508038520041		Pin	4		
28	940500100083		Bushing	4		
29	910401300007		Circlip	4		
30	510838510003		Rise Arm	1		
31	510838510002		Rise Arm	1		

03 Truck Frame(PTE20N Pro)(507646038501) Continuation

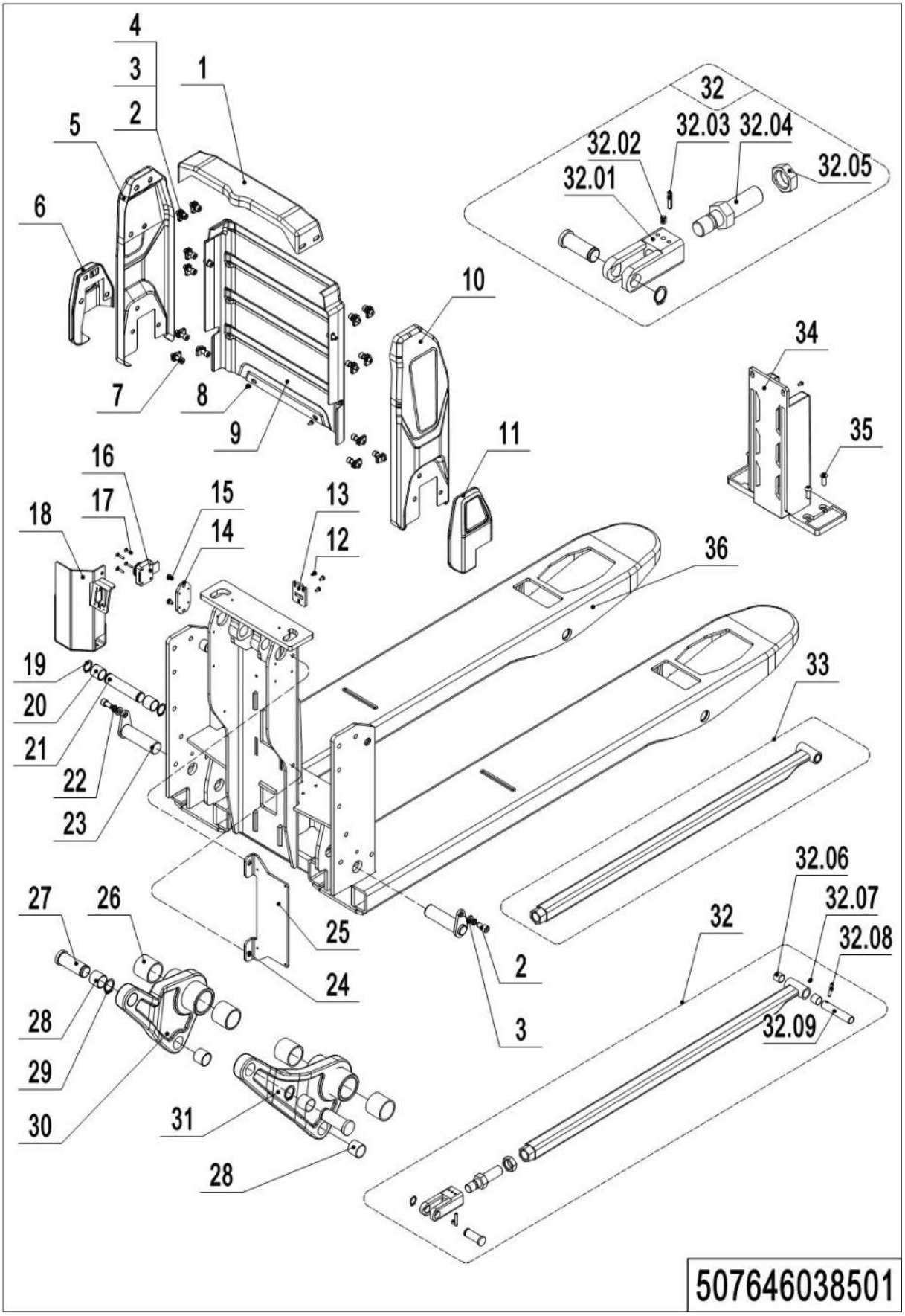

03 Truck Frame(PTE20N Pro)(507646038501) Continuation

No.	Item Code	Mark	Item Description	Qty.	Substitute	Note
32	508098510038		Push Rod Kit(800)	2		
32	508098510006		Push Rod Kit(915)	2		
32	508098510043		Push Rod Kit(1000)	2		
32	508098510122		Push Rod Kit(1070)	2		
32	507798510002		Push Rod Kit(1150)	2		
32	508098510044		Push Rod Kit(1220)	2		
32.01	508038520028		Push Rod Fork	2		
32.02	910201000005	1	Screw M6x8	2		
32.03	910600500001	1	Spring Pin 4x32	4		
32.04	508038520029		Adjusting Rod	2		
32.05	910300400008	1	Nut	2		
32.06	940500100083		Bushing	4		
32.07	911200100001	1	Oil Cup	2		
32.08	910600500002	1	Spring Pin 5x28	2		
32.09	502338520030		Push Rod Axle	2		
33	508038510016	2	Push Rod (800)	2		
33	508038510014	2	Push Rod (915)	2		
33	508038510017	2	Push Rod (1000)	2		
33	508038530018	2	Push Rod (1070)	2		
33	508038510011	2	Push Rod (1150)	2		
33	508038510024	2	Push Rod (1220)	2		
33	507638510104		Push Rod (800)	2		Fork height 75mm optional
33	507638510105		Push Rod (915)	2		Fork height 75mm optional
33	507638510106		Push Rod (1000)	2		Fork height 75mm optional
33	507638510107		Push Rod (1070)	2		Fork height 75mm optional
33	507638510102		Push Rod (1150)	2		Fork height 75mm optional
33	507638510103		Push Rod (1220)	2		Fork height 75mm optional
34	920600100436		Guiding Column	1		
35	910200300018		Screw M6x16	6		
36	507638510005	2	Chassis(540x800)	1		
36	507638510007	2	Chassis(540x915)	1		

03 Truck Frame(PTE20N Pro)(507646038501) Continuation

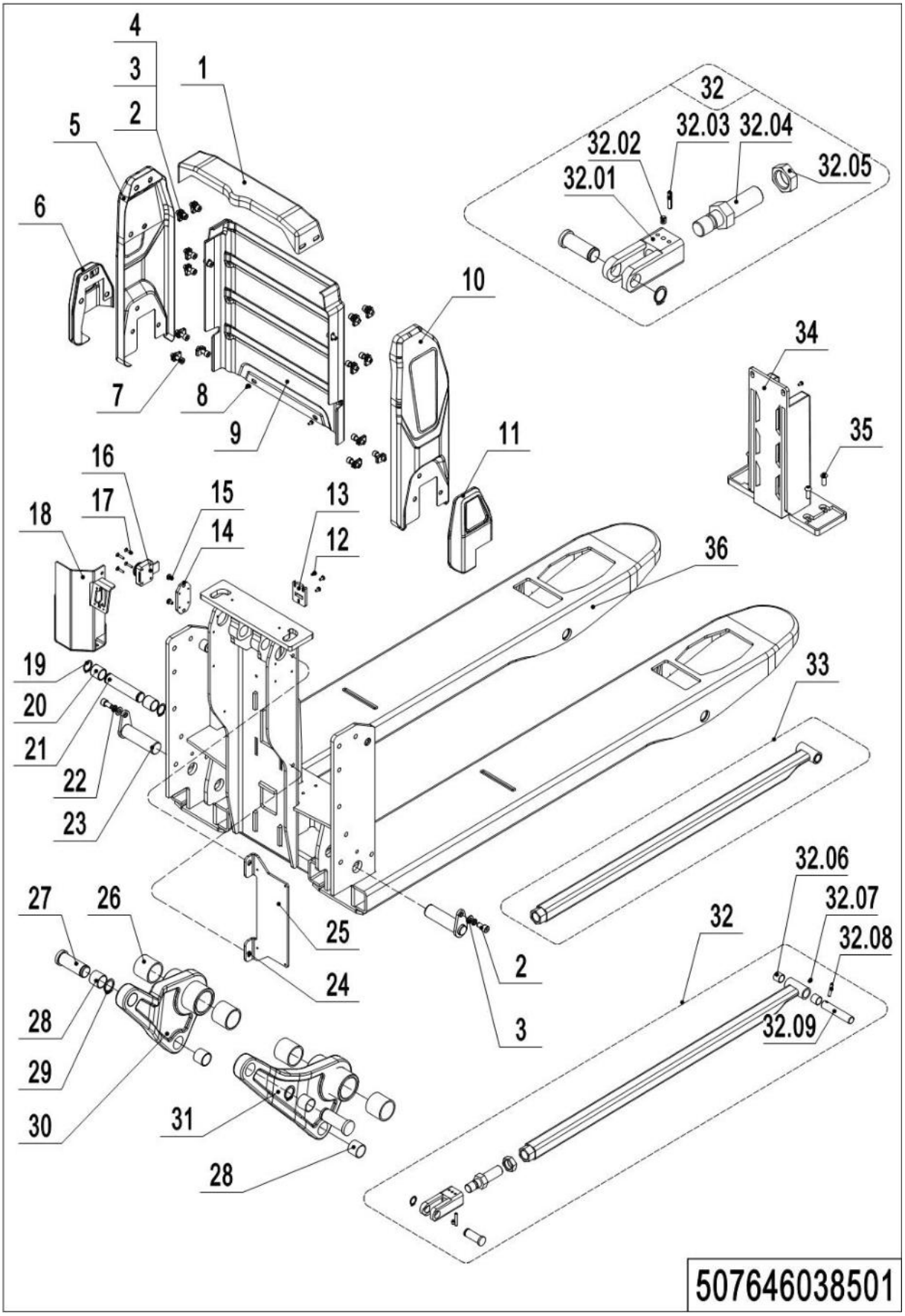

03 Truck Frame(PTE20N Pro)(507646038501) Continuation

No.	Item Code	Mark	Item Description	Qty.	Substitute	Note
36	507638510009	2	Chassis(540x1000)	1		
36	507638510011	2	Chassis(540x1070)	1		
36	507638510001	2	Chassis(540x1150)	1		
36	507638510003	2	Chassis(540x1220)	1		
36	507638510110		Chassis(75mm,540x800)	1		Fork height 75mm optional
36	507638510112		Chassis(75mm,540x915)	1		Fork height 75mm optional
36	507638510114		Chassis(75mm,540x1000)	1		Fork height 75mm optional
36	507638510116		Chassis(75mm,540x1070)	1		Fork height 75mm optional
36	507638510100		Chassis(75mm,540x1150)	1		Fork height 75mm optional
36	507638510108		Chassis(75mm,540x1220)	1		Fork height 75mm optional

04 Truck Frame(PTE20N Pro)(507646038502)

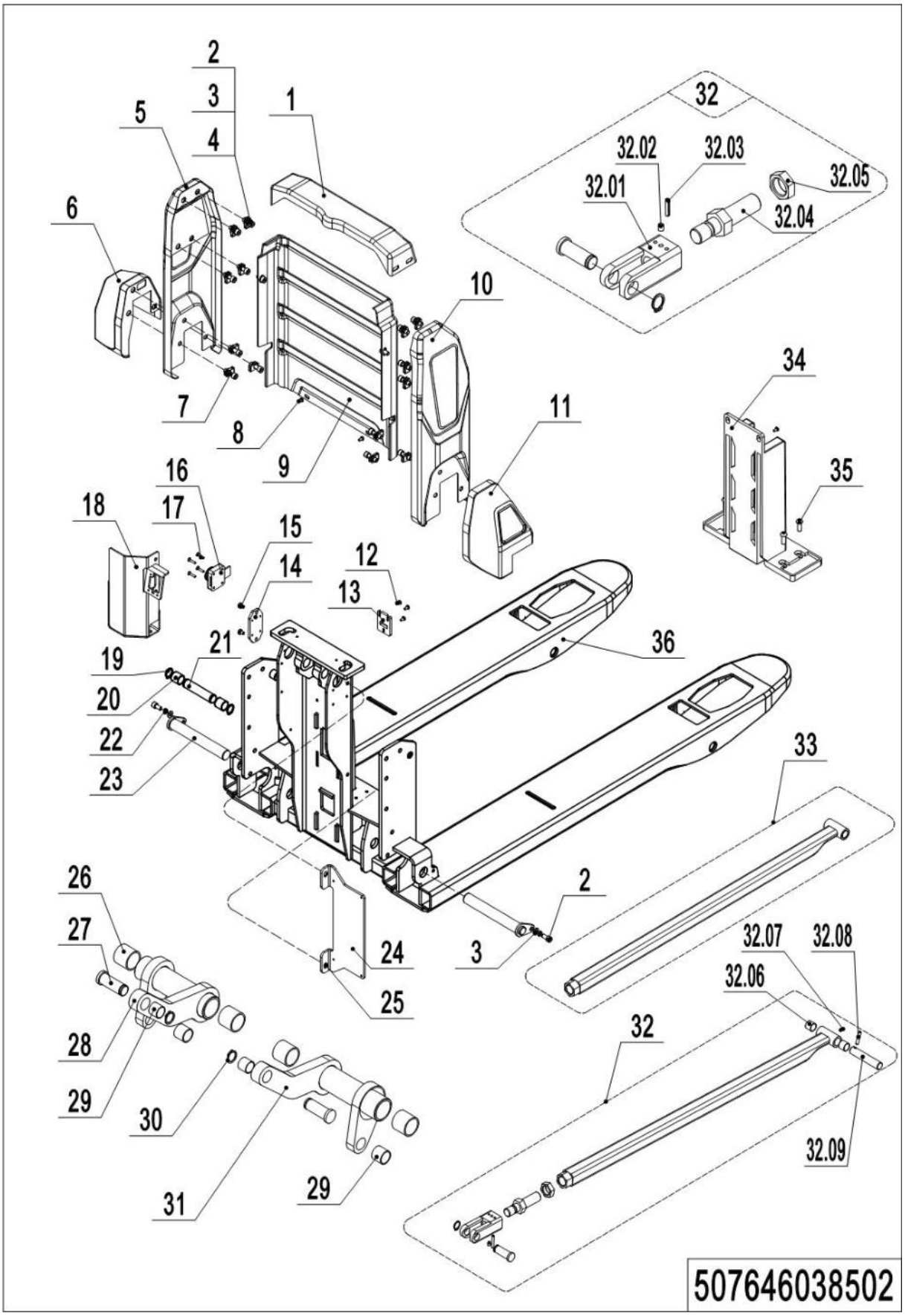

04 Truck Frame(PTE20N Pro)(507646038502)

No.	Item Code	Mark	Item Description	Qty.	Substitute	Note
1	507738520081		Cover	1		
2	910200200055	1	Screw M8x16	8		
3	910400100021		Flat Washer	8		
4	940400400002		Cage Nut	14		
5	507738510094		Cover	1		Be sure to color your order
6	507738510092		Cover	1		Be sure to color your order
7	910200200157		Screw M8x25	10		
8	910200300017	1	Screw M6x12	2		
9	507738520080		Front Panel	1		
10	507738510095		Cover	1		Be sure to color your order
11	507738510093		Cover	1		
12	910200500034	1	Screw M4x8	3		
13	508038520109		Lock Catch	1		Be sure to color your order
14	507738520009		Mounting Plate	1		
15	910203100001		Screw M6x10	2		
16	507738510051		Coded Lock	1		
17	910203000001		Screw M4x20	4		
18	507738510054		Wire Box	1		
19	910401300011		Circlip	2		
20	940500100096		Bushing	2		
21	508538520016		Pin	1		
22	910400500006		Spring Washer	2		
23	507738510053		Pin	2		
24	507738520017		Mounting Plate	1		
25	910200200013		Screw M4x10	2		
26	940500100097		Bushing	4		
27	508038520041		Pin	4		
28	510838510005		Rise Arm	1		
29	940500100083		Bushing	8		
30	910401300007		Circlip	4		
31	510838510004		Rise Arm	1		

04 Truck Frame(PTE20N Pro)(507646038502) Continuation

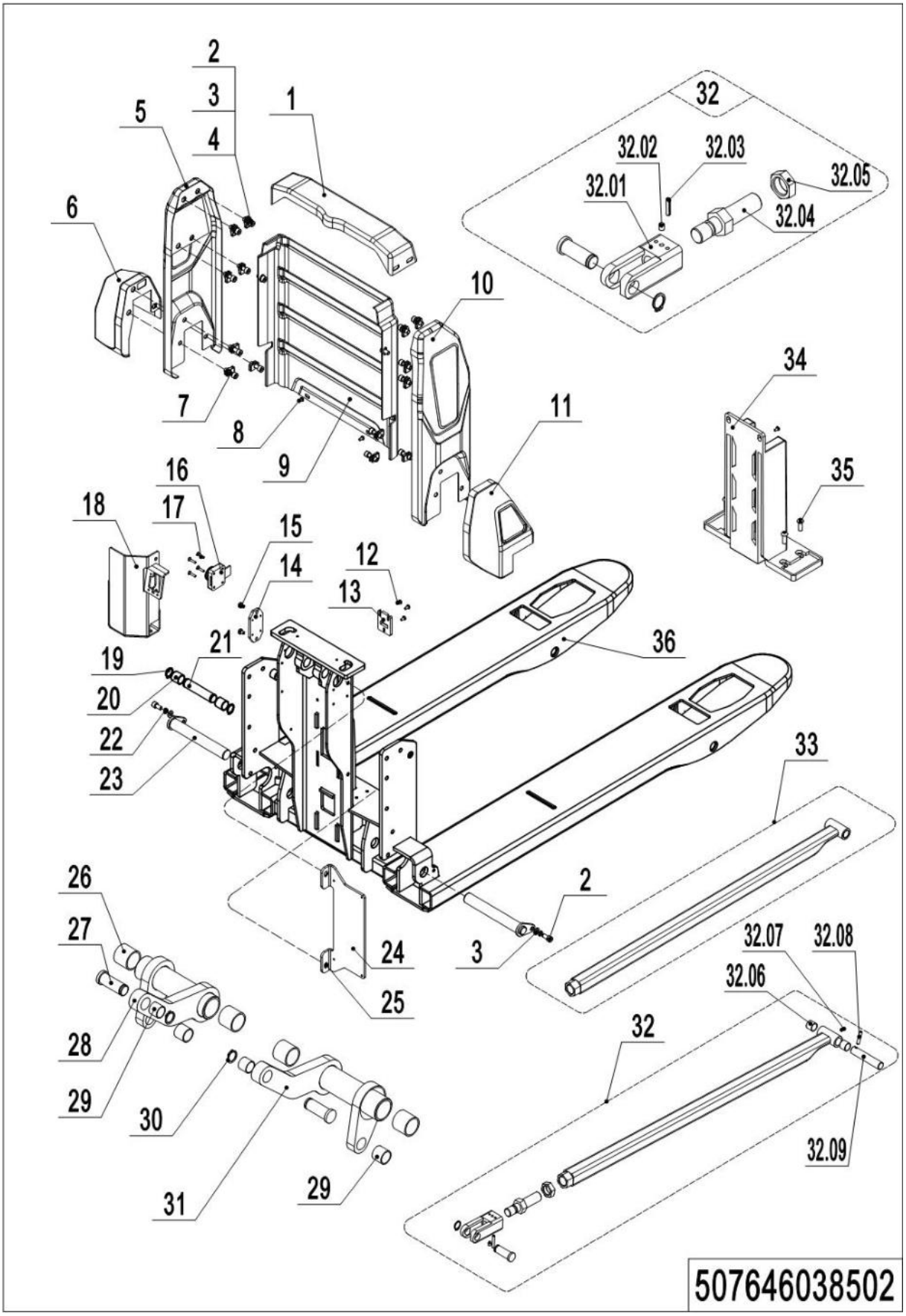

04 Truck Frame(PTE20N Pro)(507646038502) Continuation

No.	Item Code	Mark	Item Description	Qty.	Substitute	Note
32	508098510038		Push Rod Kit(800)	2		
32	508098510006		Push Rod Kit(915)	2		
32	508098510043		Push Rod Kit(1000)	2		
32	508098510122		Push Rod Kit(1070)	2		
32	507798510002		Push Rod Kit(1150)	2		
32	508098510044		Push Rod Kit(1220)	2		
32.01	508038520028		Push Rod Fork	2		
32.02	910201000005	1	Screw M6x8	2		
32.03	910600500001	1	Spring Pin 4x32	4		
32.04	508038520029		Adjusting Rod	2		
32.05	910300400008	1	Nut	2		
32.06	940500100083		Bushing	4		
32.07	911200100001	1	Oil Cup	2		
32.08	910600400024	1	Spring Pin 5x28	2		
32.09	502338520030		Push Rod Axle	2		
33	508038510016	2	Push Rod (800)	2		
33	508038510014	2	Push Rod (915)	2		
33	508038510017	2	Push Rod (1000)	2		
33	508038530018	2	Push Rod (1070)	2		
33	508038510011	2	Push Rod (1150)	2		
33	508038510024	2	Push Rod (1220)	2		
33	507638510104		Push Rod (800)	2		Fork height 75mm optional
33	507638510105		Push Rod (915)	2		Fork height 75mm optional
33	507638510106		Push Rod (1000)	2		Fork height 75mm optional
33	507638510107		Push Rod (1070)	2		Fork height 75mm optional
33	507638510102		Push Rod (1150)	2		Fork height 75mm optional
33	507638510103		Push Rod (1220)	2		Fork height 75mm optional
34	920600100436		Guiding Column	1		
35	910200300018		Screw M6x16	6		
36	507638510006	2	Chassis(685x800)	1		
36	507638510008	2	Chassis(685x915)	1		

04 Truck Frame(PTE20N Pro)(507646038502) Continuation

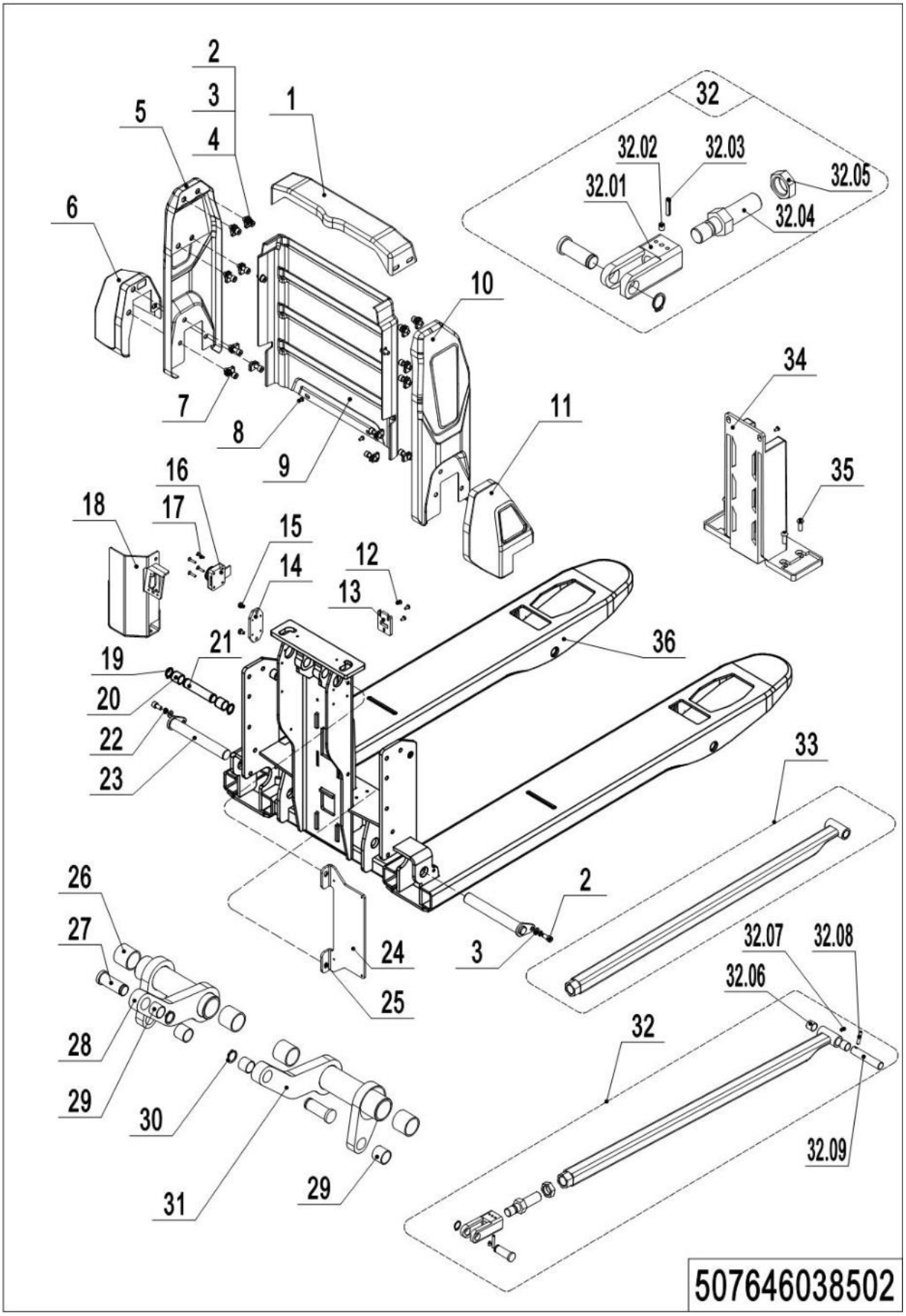

04 Truck Frame(PTE20N Pro)(507646038502) Continuation

No.	Item Code	Mark	Item Description	Qty.	Substitute	Note
36	507638510010	2	Chassis(685x1000)	1		
36	507638510012	2	Chassis(685x1070)	1		
36	507638510002	2	Chassis(685x1150)	1		
36	507638510004	2	Chassis(685x1220)	1		
36	507638510111		Chassis(75mm,685x800)	1		Fork height 75mm optional
36	507638510113		Chassis(75mm,685x915)	1		Fork height 75mm optional
36	507638510115		Chassis(75mm,685x1000)	1		Fork height 75mm optional
36	507638510117		Chassis(75mm,685x1070)	1		Fork height 75mm optional
36	507638510101		Chassis(75mm,685x1150)	1		Fork height 75mm optional
36	507638510109		Chassis(75mm,685x1220)	1		Fork height 75mm optional

Chapter 4: Steering System, Braking System, Wheels

01 Tiller Unit(PTE15N Pro)(507746011001)

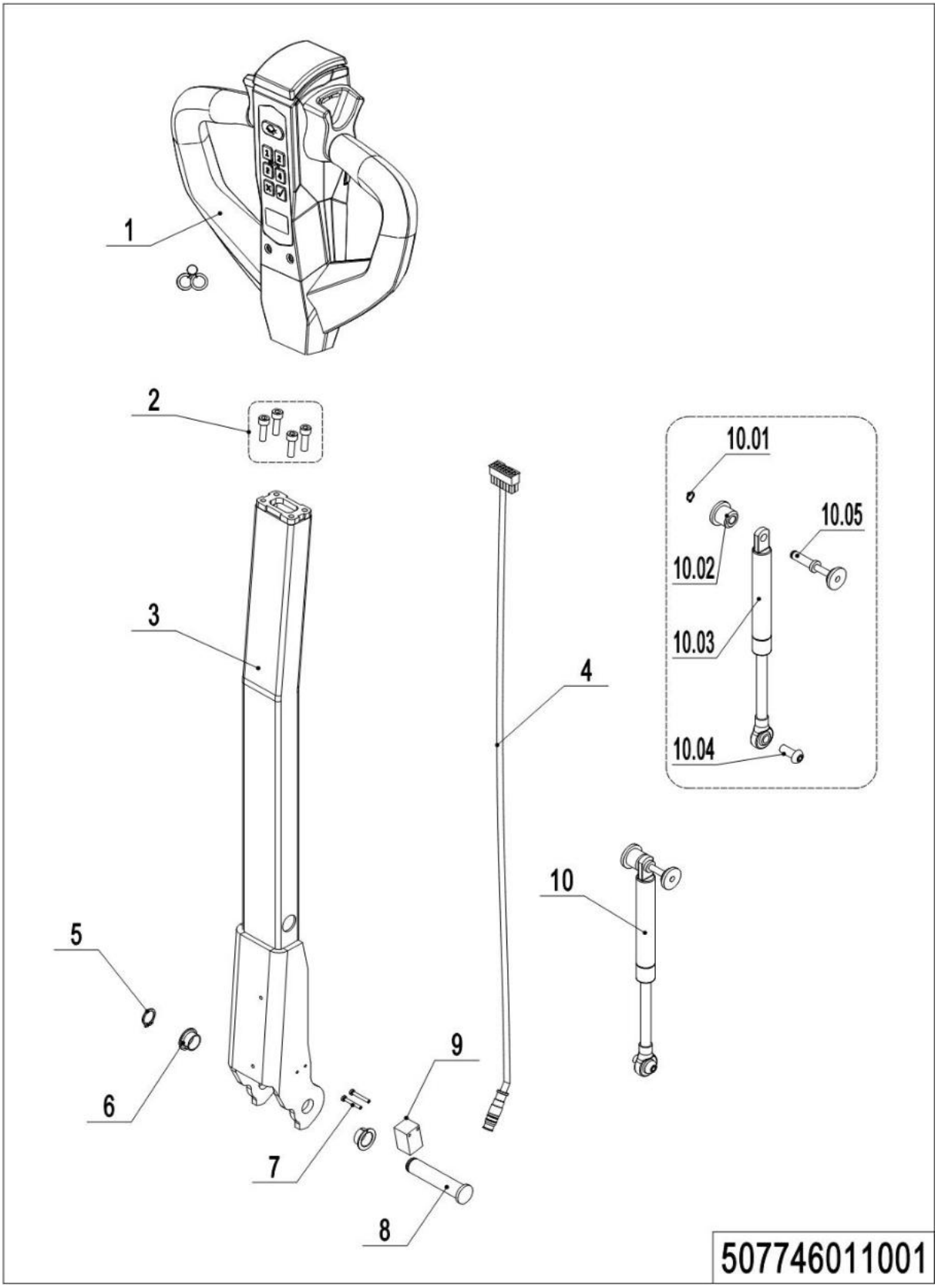

01 Tiller Unit(PTE15N Pro)(507746011001)

No.	Item Code	Mark	Item Description	Qty.	Substitute	Note
1	922100100131		Tiller	1		
2	910200200036	1	Screw M6x20	4		
3	508011010000		Tiller Rod	1		
4	508033010040		Wire Harness	1		
5	910401300006		Circlip	1		
6	940500200001		Bushing	2		
7	941101100001	1	Screw M3x22	2		
8	508011020004		Pin	1		
9	920200400027		Proximity Switch	1		
10	508098510084		Gas Spring Kit	1		
10.01	910401300001		Circlip	1		
10.02	508011020005		Fixing Base	1		
10.03	508011010001		Gas Spring	1		
10.04	941100100011	1	Screw M8x22	1		
10.05	508011010002		Pin	1		

1= Supply as package. 2= Supply with constraints. 3= Phasing-out supply. 4= Supply as assembly. 5= Check other tables.

02 Tiller Unit(PTE20N Pro)(507646011001)

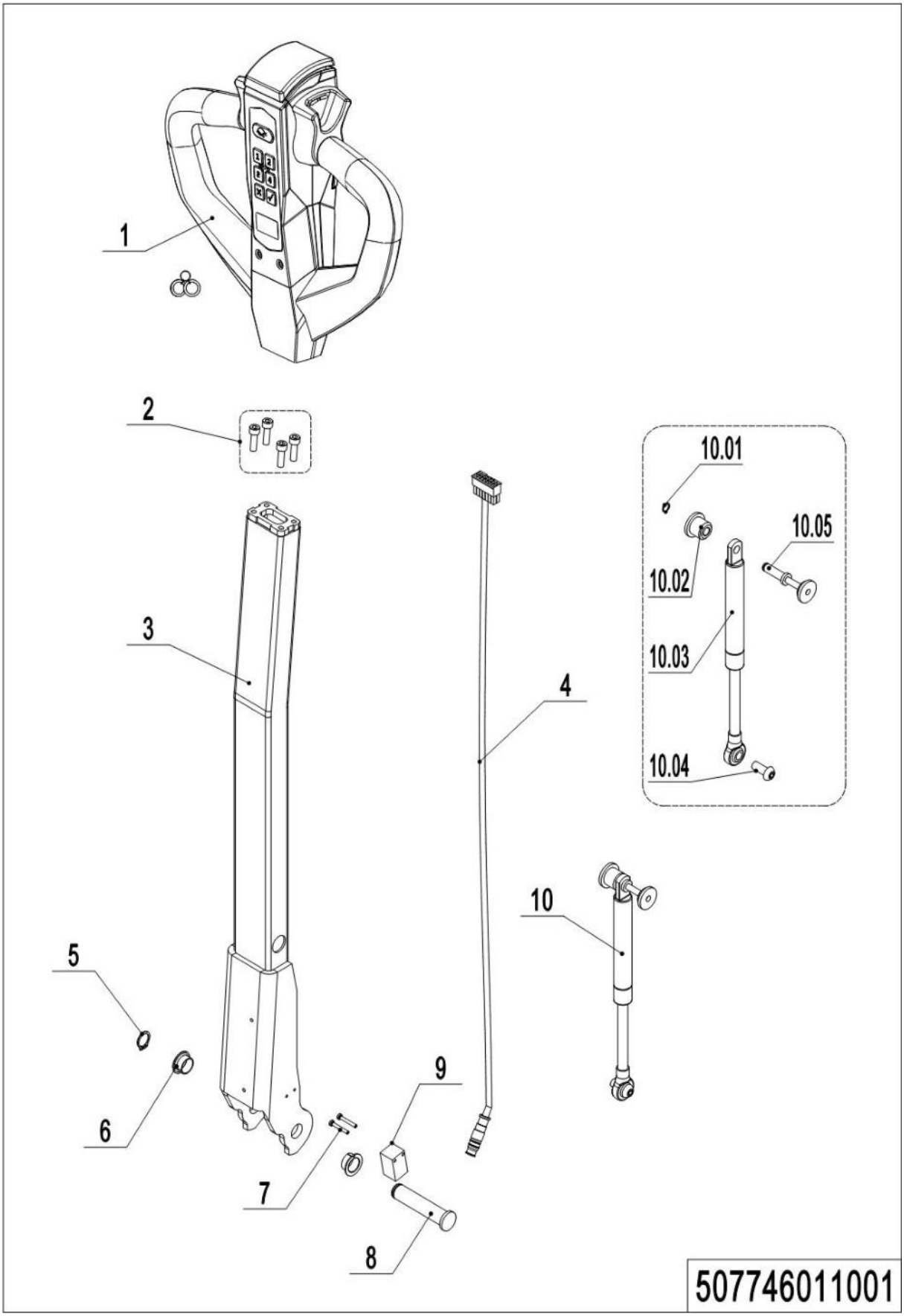

1= Supply as package. 2= Supply with constraints. 3= Phasing-out supply. 4= Supply as assembly. 5= Check other tables.

02 Tiller Unit(PTE20N Pro)(507646011001)

No.	Item Code	Mark	Item Description	Qty.	Substitute	Note
1	922100100141		Tiller	1		
2	910200200036	1	Screw M6x20	4		
3	508011010000		Tiller Rod	1		
4	508533010005		Wire Harness	1		
5	910401300006		Circlip	1		
6	940500200001		Bushing	2		
7	941101100001	1	Screw M3x22	2		
8	508011020004		Pin	1		
9	920200400026		Proximity Switch	1		
10	508098510084		Gas Spring Kit	1		
10.01	910401300001		Circlip	1		
10.02	508011020005		Fixing Base	1		
10.03	508011010001		Gas Spring	1		
10.04	941100100011	1	Screw M8x22	1		
10.05	508011010002		Pin	1		

03 Control Handle(PTE15N Pro)(507746011002)

03 Control Handle(PTE15N Pro)(507746011002)

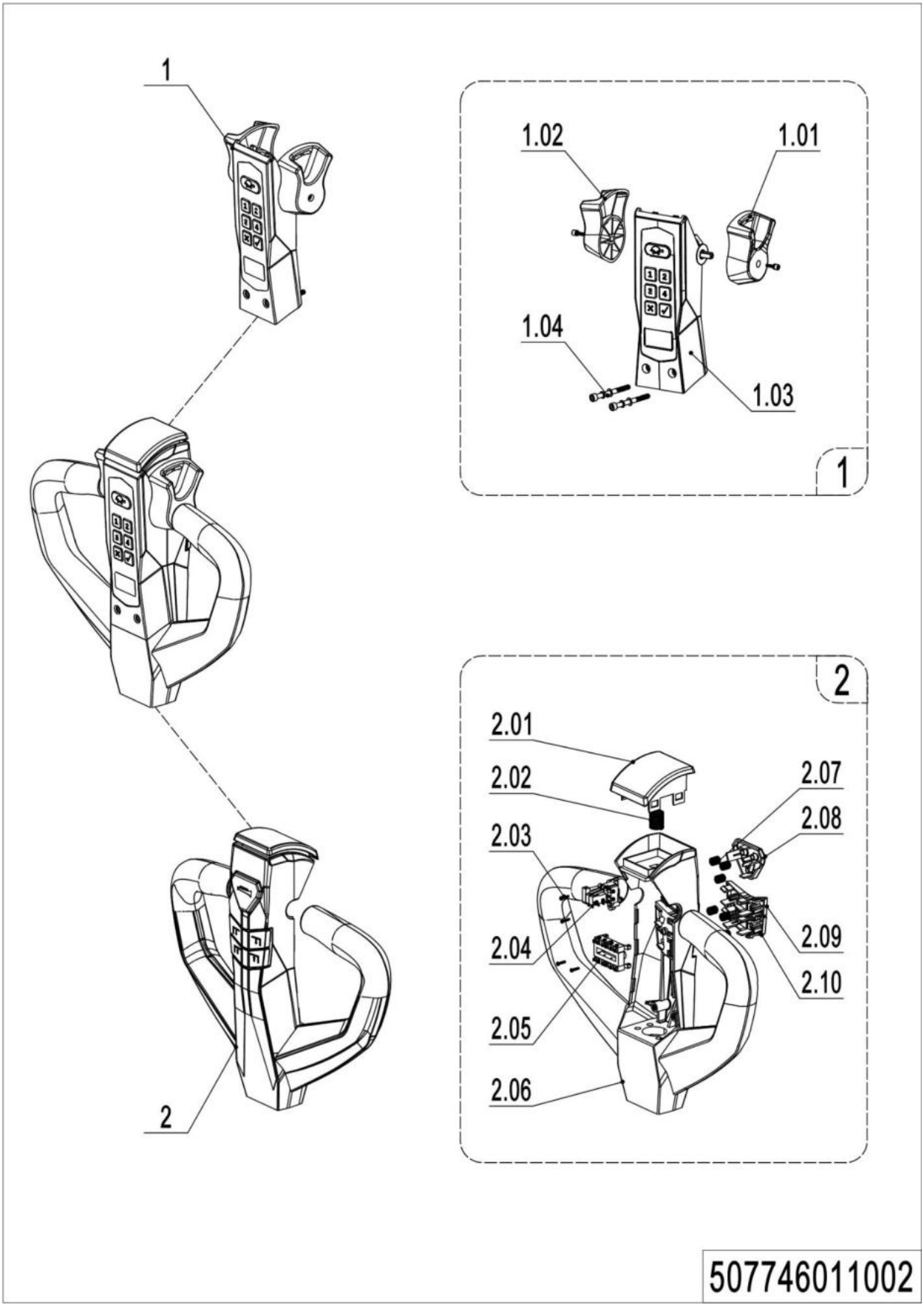

No.	Item Code	Mark	Item Description	Qty.	Substitute	Note
--	922100100131		Tiller	1		
1	507798510003		Accelerator Assembly	1		
1.01	532298520020		Dial Key	1		
1.02	532298520021		Dial Key	1		
1.03	507798520046		PCB	1		
1.04	509998520065		Bolt M5X50	2		
2	540298510001		Tiller Assembly	1		
2.01	540298520001		Button	1		
2.02	509998520071		Spring	1		
2.03	509998520070		Screw	5		
2.04	540298520002		Wire Harness Kit	1		
2.05	509998520032		Wire Harness Kit	1		
2.06	540298520003		Tiller	1		
2.07	509998520029		Spring	7		
2.08	540298520004		Button	1		
2.09	540298520005		Button	1		
2.10	540298520006		Button	1		

1= Supply as package. 2= Supply with constraints. 3= Phasing-out supply. 4= Supply as assembly. 5= Check other tables.

04 Control Handle(PTE20N Pro)(507646011002)

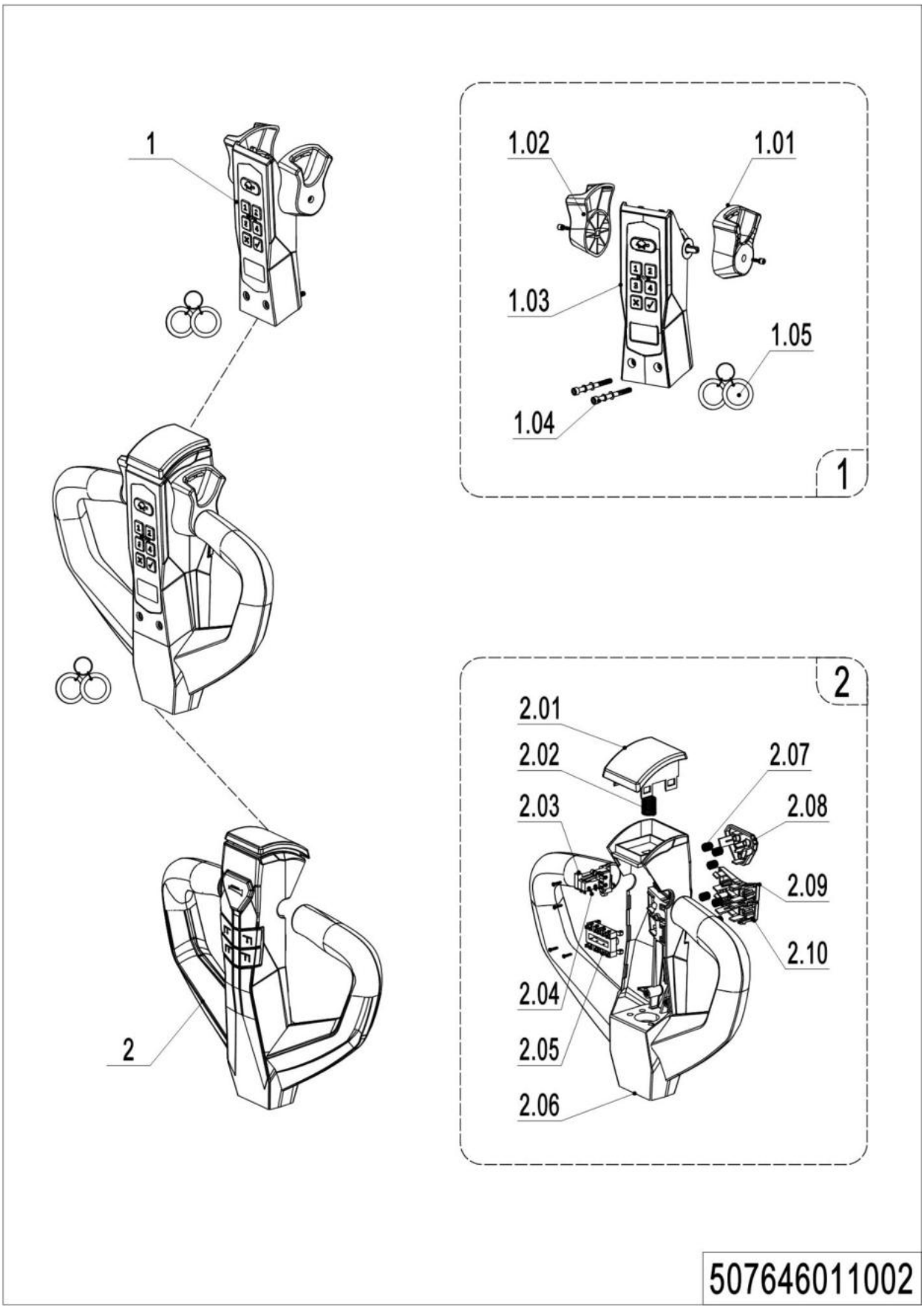

1= Supply as package. 2= Supply with constraints. 3= Phasing-out supply. 4= Supply as assembly. 5= Check other tables.

04 Control Handle(PTE20N Pro)(507646011002)

No.	Item Code	Mark	Item Description	Qty.	Substitute	Note
--	922100100141		Tiller	1		
1	507698510006		Accelerator Assembly	1		
1.01	532298520020		Dial Key	1		
1.02	532298520021		Dial Key	1		
1.03	507698520008		PCB	1		
1.04	509998520065		Bolt M5X50	2		
1.05	507698520001		ID Card	1		
2	540298510001		Tiller Assembly	1		
2.01	540298520001		Button	1		
2.02	509998520071		Spring	1		
2.03	509998520070		Screw	5		
2.04	540298520002		Wire Harness Kit	1		
2.05	509998520032		Wire Harness Kit	1		
2.06	540298520003		Tiller	1		
2.07	509998520029		Spring	7		
2.08	540298520004		Button	1		
2.09	540298520005		Button	1		
2.10	540298520006		Button	1		

05 Load Wheel (Tandem)(PTE15N Pro)(507746017001)

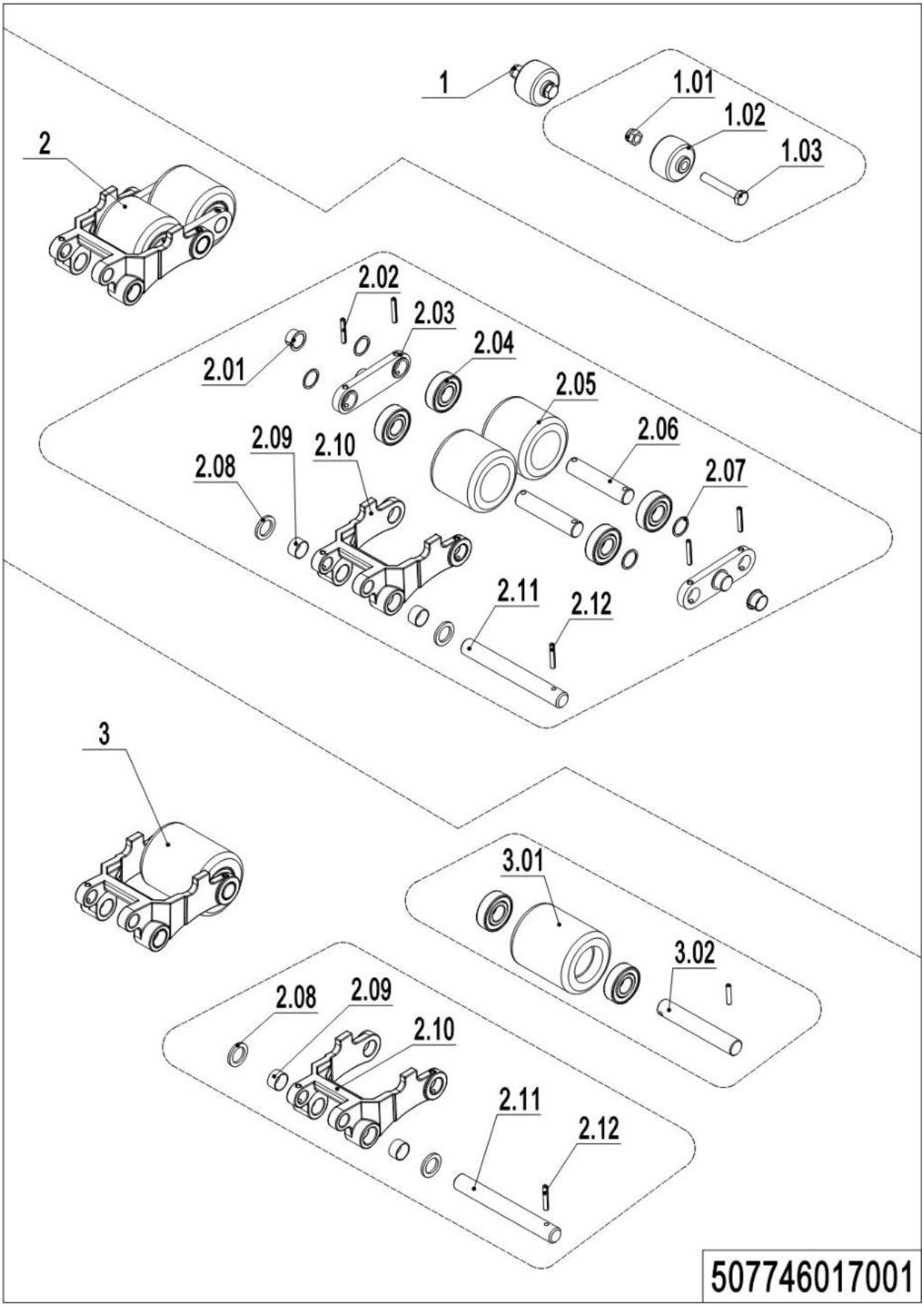

05 Load Wheel (Tandem)(PTE15N Pro)(507746017001)

No.	Item Code	Mark	Item Description	Qty.	Substitute	Note
1	502398510003		Pulley components	2		
1.01	910300500005	1	Nut	2		
1.02	505638520039		Running Pulley	2		
1.02	506238520041		Running Pulley	2		Fork height 75mm optional
1.03	941100200019	1	Bolt M10x60	2		
2	508098510049		Wheel Kits	2		
2.01	940500200038		Bushing	4		
2.02	910600500004	1	Spring Pin 5x35	8/2		Double / single
2.03	508017020001		Connecting Plate	4		
2.04	910700200019		Bearing	8/4		Double / single
2.05	940300300047		WheelΦ80x70	4		
2.06	502317020001		Wheel Axle	4		Double
2.07	940600500013		Washer	8/4		Double / single
2.08	454853020018		Gasket Φ30xΦ20x2	4		
2.09	940500100083		Bushing	4		
2.10	502338520078		Riser	2		
2.11	508038520030		Axle	2		
2.12	910600500002		Spring Pin 5x28	2		
3	508098510050		Wheel Kits	2		
3.01	940300300023		WheelΦ80x93	2		
3.01	940300300002		WheelΦ74x93	2		Fork height 75mm optional
3.02	301017020001		Wheel Axle	2		single

06 Load Wheel (Tandem)(PTE20N Pro)(507646017001)

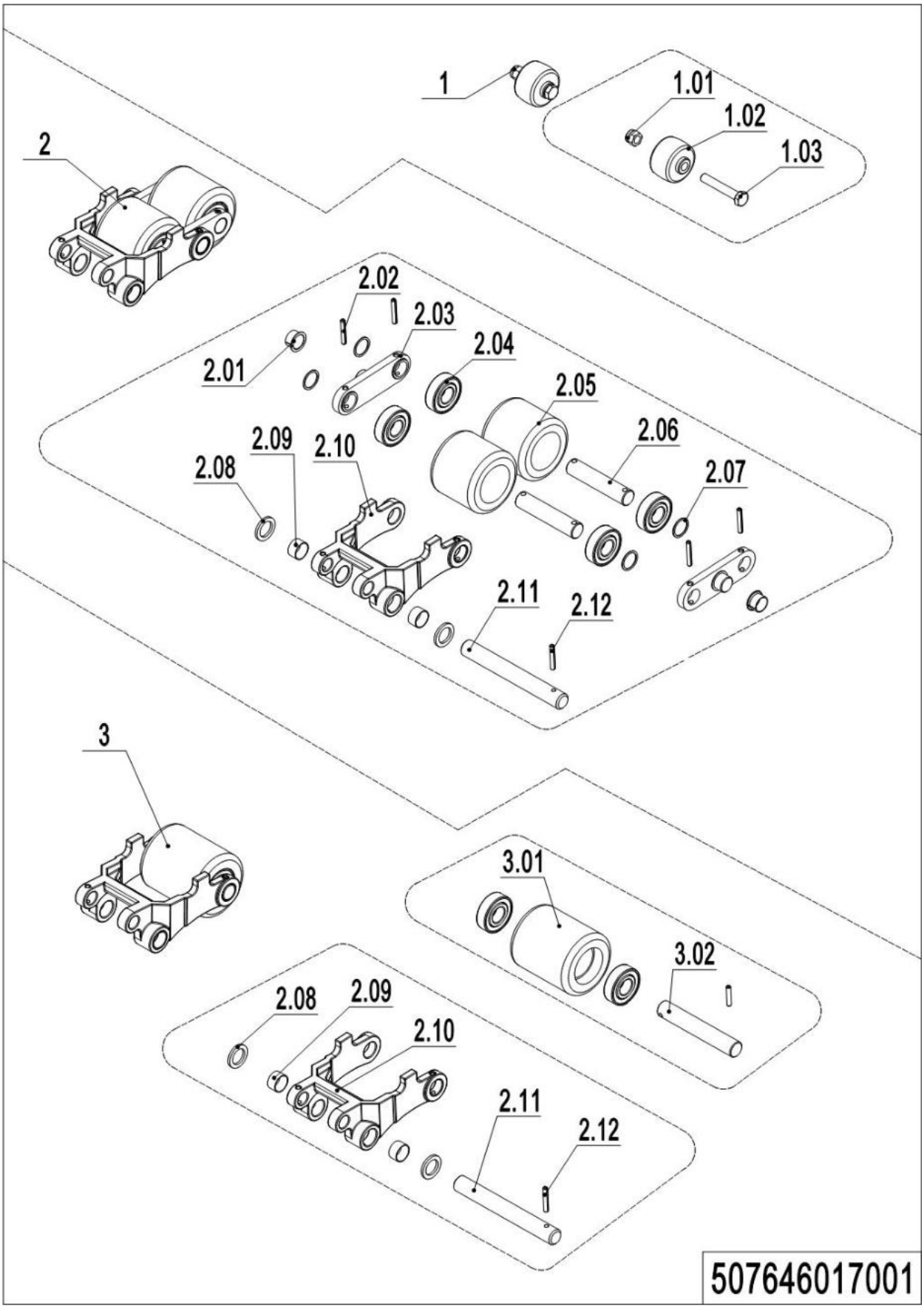

06 Load Wheel (Tandem) (PTE20N Pro)(507646017001)

No.	Item Code	Mark	Item Description	Qty.	Substitute	Note
1	502398510003		Pulley components	2		
1.01	910300500005	1	Nut	2		
1.02	505638520039		Running Pulley	2		
1.03	941100200019	1	Bolt M10x60	2		
2	508098510049		Wheel Kits	2		
2.01	940500200038		Bushing	4		
2.02	910600500004	1	Spring Pin 5x35	8/2		Double / single
2.03	508017020001		Connecting Plate	4		
2.04	910700200019		Bearing	8/4		Double / single
2.05	940300300005		WheelΦ80x70	4		
2.06	502317020001		Wheel Axle	4		Double
2.07	940600500013		Washer	8/4		Double / single
2.08	454853020018		Gasket Φ30xΦ20x2	4		
2.09	940500100083		Bushing	4		
2.10	502338520078		Riser	2		QT
2.11	508038520030		Axle	2		
2.12	910600500002		Spring Pin 5x28	4		
3	508098510050		Wheel Kits	2		
3.01	940300300023		WheelΦ80x93	2		
3.01	940300300002		WheelΦ74x93	2		Fork height 75mm optional
3.02	301017020001		Wheel Axle	2		single

07 Caster(507746016501)

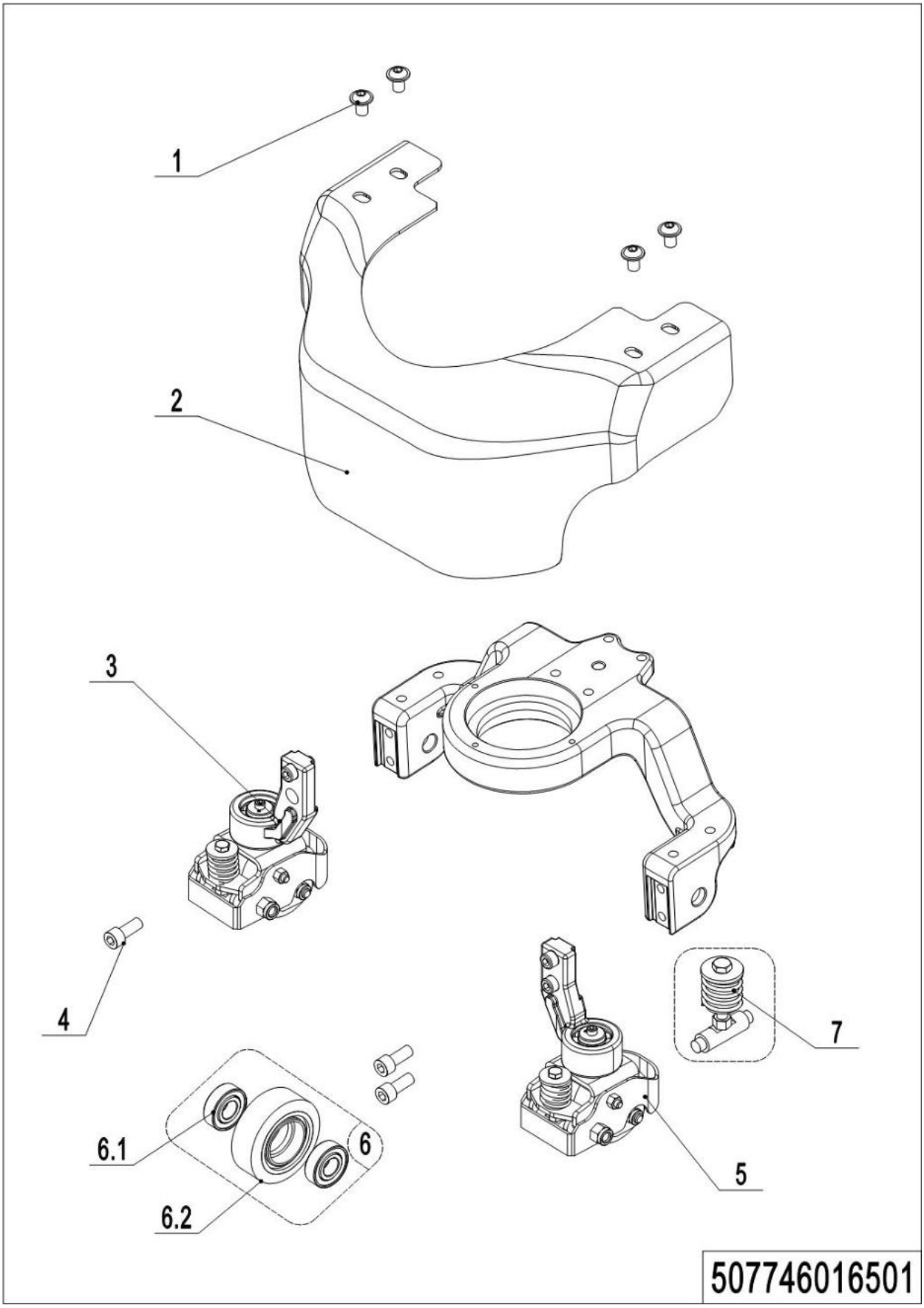

1= Supply as package. 2= Supply with constraints. 3= Phasing-out supply. 4= Supply as assembly. 5= Check other tables.

07 Caster(507746016501)

No.	Item Code	Mark	Item Description	Qty.	Substitute	Note
1	941100100005	1	Screw M10x15	4		
2	508016520000		Reinforced Apron	1		35 mm off the ground
2	508016520008		Reinforced Apron	1		45 mm off the ground
2	508016510006		Reinforced Apron	1		35 mm off the ground, reinforced
2	508016510011		Reinforced Apron	1		45 mm off the ground, reinforced
3	508016510002		Caster Kit	1		
4	910200200076	1	Screw M10x25	4		
5	508016510005		Caster Kit	1		
6	502398510015	2	Load Wheel Kit	2		
6.1	910700200018		Bearing	4		
6.2	940300300017		WheelΦ80x30	2		
7	508098510047		Spring Kit	2		

08 Caster(without)(507746016502)

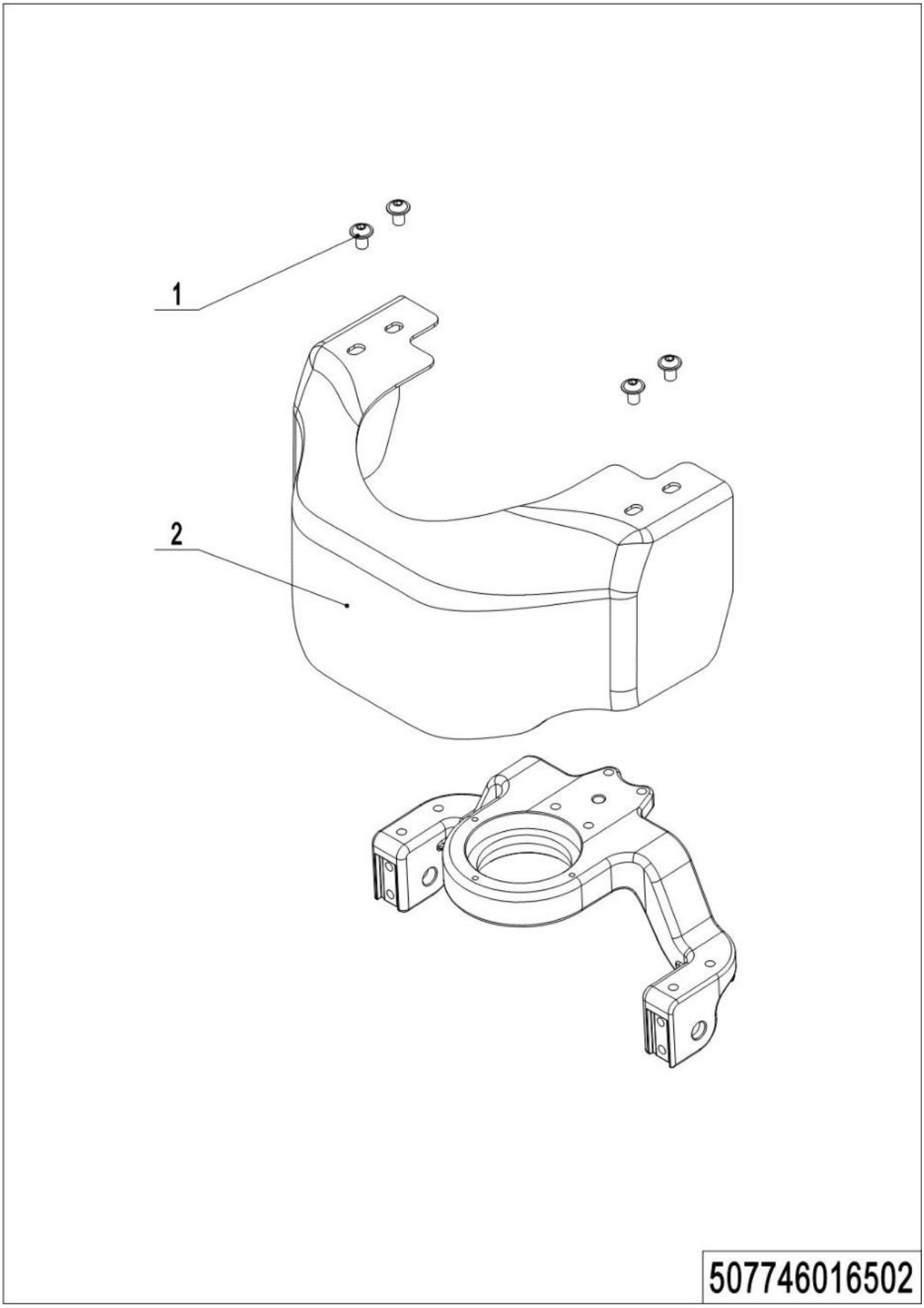

1= Supply as package. 2= Supply with constraints. 3= Phasing-out supply. 4= Supply as assembly. 5= Check other tables.

08 Caster(without)(507746016502)

No.	Item Code	Mark	Item Description	Qty.	Substitute	Note
1	941100100005	1	Screw M10x15	4		
2	508016520001		Reinforced Apron	1		35 mm off the ground
2	508016520009		Reinforced Apron	1		45 mm off the ground
2	508016510007		Reinforced Apron	1		35 mm off the ground,
2	508016510010		Reinforced Apron	1		45 mm off the ground,

Chapter 5: Electrical Parts

01 Wire Harness(PTE15N Pro)(507746033001)

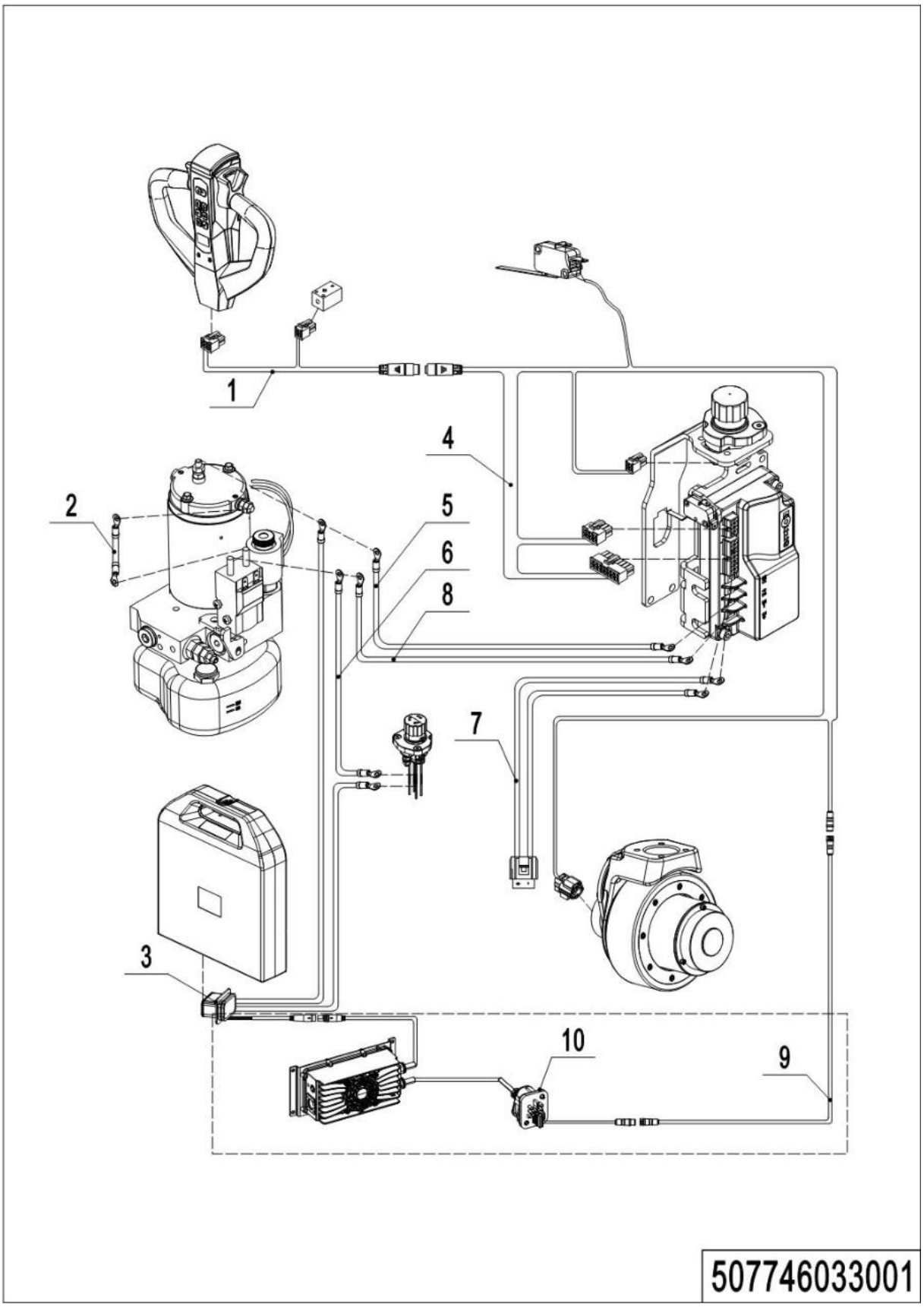

01 Wire Harness(PTE15N Pro) (507746033001)

No.	Item Code	Mark	Item Description	Qty.	Substitute	Note
1	508033010040		Wire Harness	1		
2	508033010034		Wire Harness	1		
3	507733010002		Wire Harness	1		
3	507733010003		Wire Harness	1		For internal charger
4	507733010000		Wire Harness	1		
4	507733010001		Wire Harness	1		
4	507733010004		Wire Harness	1		For internal charger
4	507733010005		Wire Harness	1		For internal charger
5	508033010036		Cables	1		
6	508033010033		Cables	1		
7	508033010006		Wire Harness	1		
7	508033010032		Wire Harness	1		
8	508033010035		Cables	1		
9	921500100244		Cable	1		For internal charger
10	920400300029		Socket	1		Match(internal charger)：ENG、ITY、SWE、BRA、
10	920400300030		Socket	1		Match(internal charger)：EU
10	920400300036		Socket	1		Match(internal charger)：SWE、BRA、JP、EU、
10	920400300035		Socket	1		Match(internal charger)：EU(SJ)

02 Wire Harness(PTE20N Pro) (507646033001)

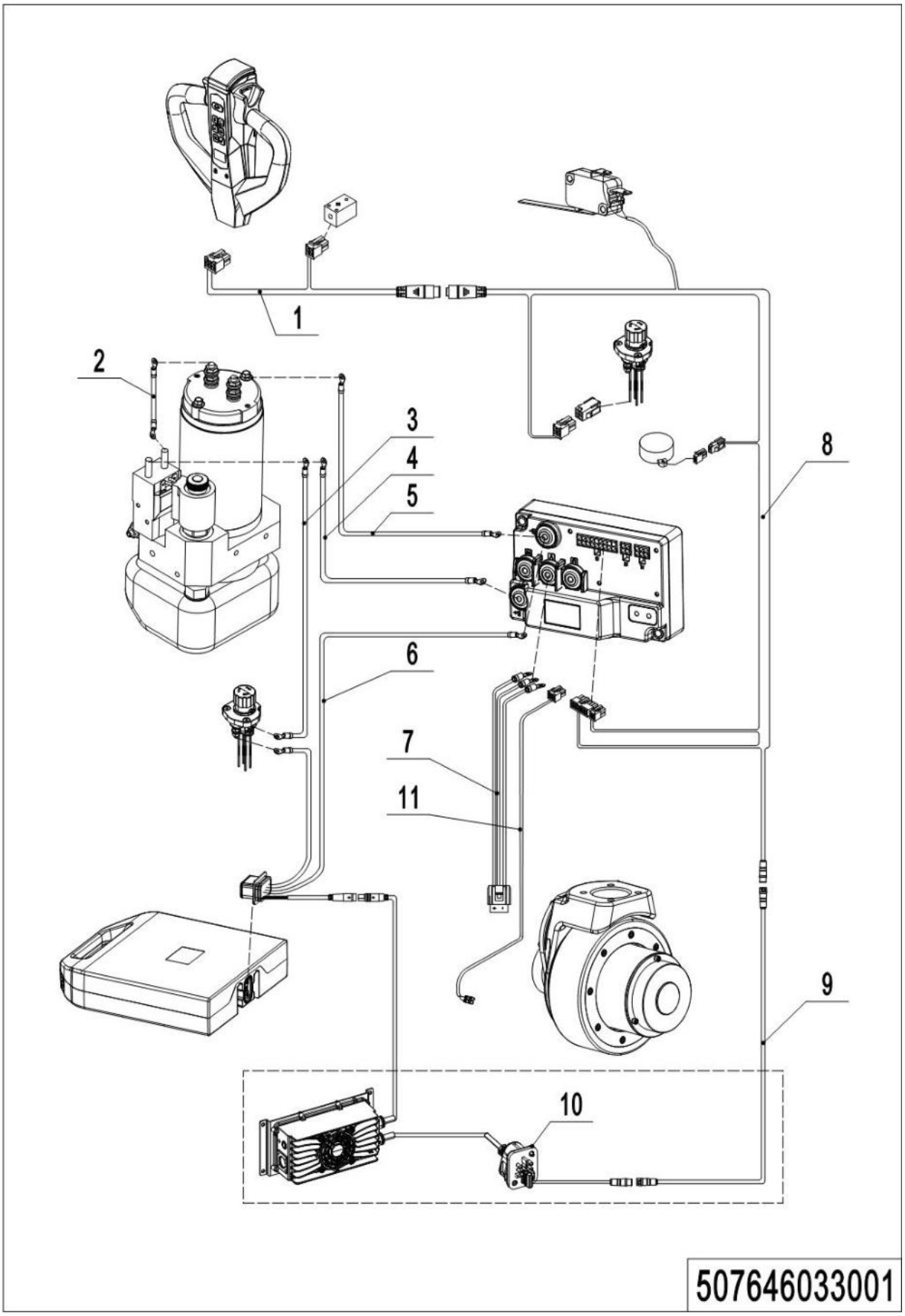

1= Supply as package. 2= Supply with constraints. 3= Phasing-out supply. 4= Supply as assembly. 5= Check other tables.

02 Wire Harness (PTE20N Pro) (507646033001)

No.	Item Code	Mark	Item Description	Qty.	Substitute	Note
1	507633010005		Wire Harness	1		
2	508533010006		Wire Harness	1		
3	508533010014		Cables	1		
4	508533010004		Wire Harness	1		
5	508533010005		Wire Harness	1		
6	507633010002		Wire Harness	1		
6	507633010003		Wire Harness	1		For internal charger
7	508533010007		Wire Harness	1		
8	507633010001		Wire Harness	1		
8	507633010004		Wire Harness	1		For internal charger
9	921500100244		Cable	1		For internal charger
10	920400300029		Socket	1		Match(internal charger)：ENG、ITY、SWE、BRA CHA：ENG、ITY、SWE、BRA、CHA
10	920400300030		Socket	1		Match(internal charger)：EU
10	920400300036		Socket	1		Match(internal charger)：SWE、BRA、JP、EU、ITY、US(SJ)
10	920400300035		Socket	1		Match(internal charger)：EU(SJ)
11	508533010002		Wire Harness	1		

03 Controller(PTE15N Pro)(507746033002)

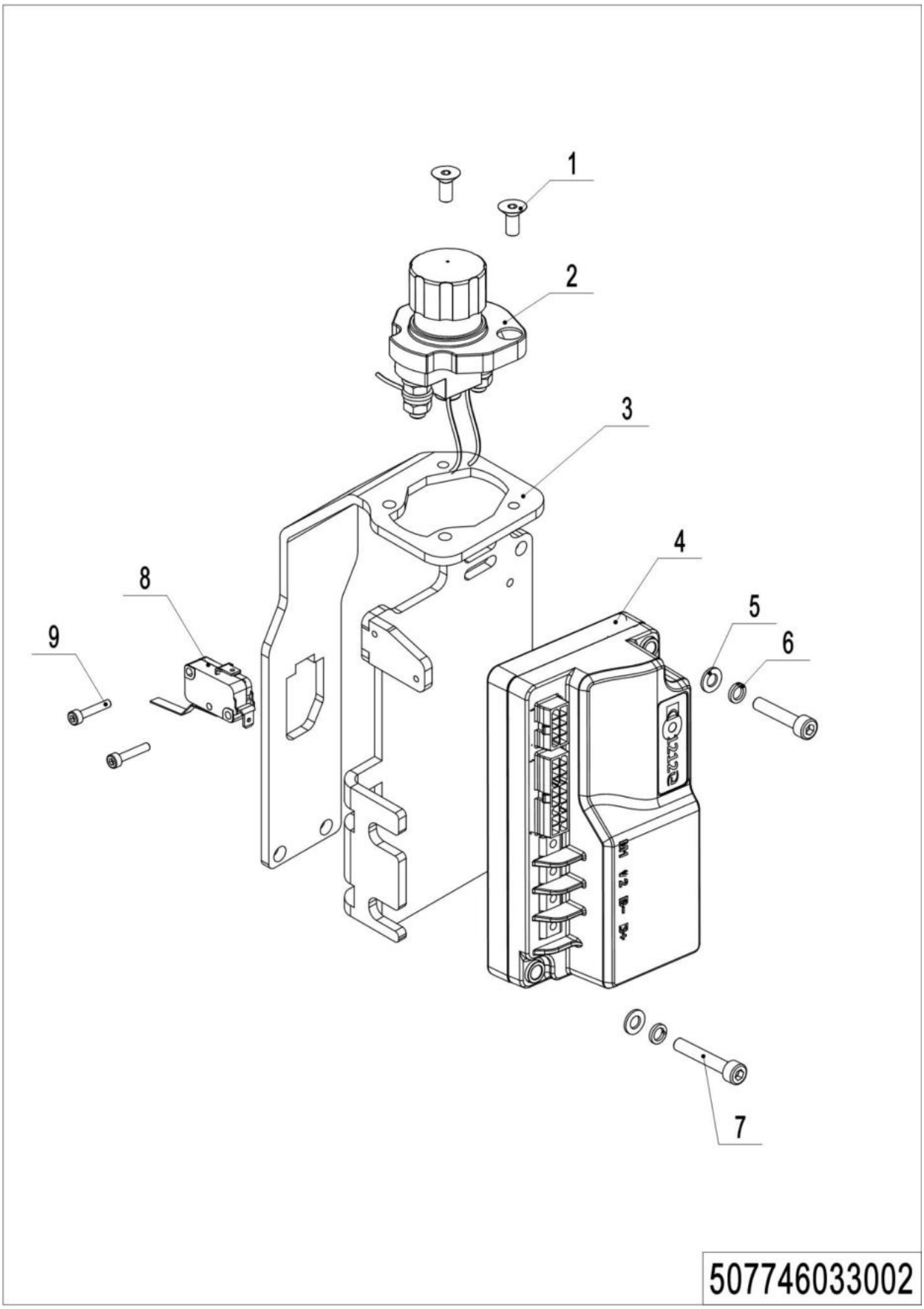

1= Supply as package. 2= Supply with constraints. 3= Phasing-out supply. 4= Supply as assembly. 5= Check other tables.

03 Controller(PTE15N Pro) (507746033002)

No.	Item Code	Mark	Item Description	Qty.	Substitute	Note
1	910200400010		Screw M5x10	2		
2	920200100027		Emergency Button	1		
3	508024010007		Mounting Rack	1		
4	508033010048	1	Controller	1		1212E-2503
5	910400100003	1	Flat Washer	2		
6	910400500003	1	Spring Washer	2		
7	910200200018	1	Screw M4x30	2		
8	920200300022		Microswitch	1		
9	910200200004		Screw M3x16	2		

04 Controller(PTE20N Pro) (507646033002)

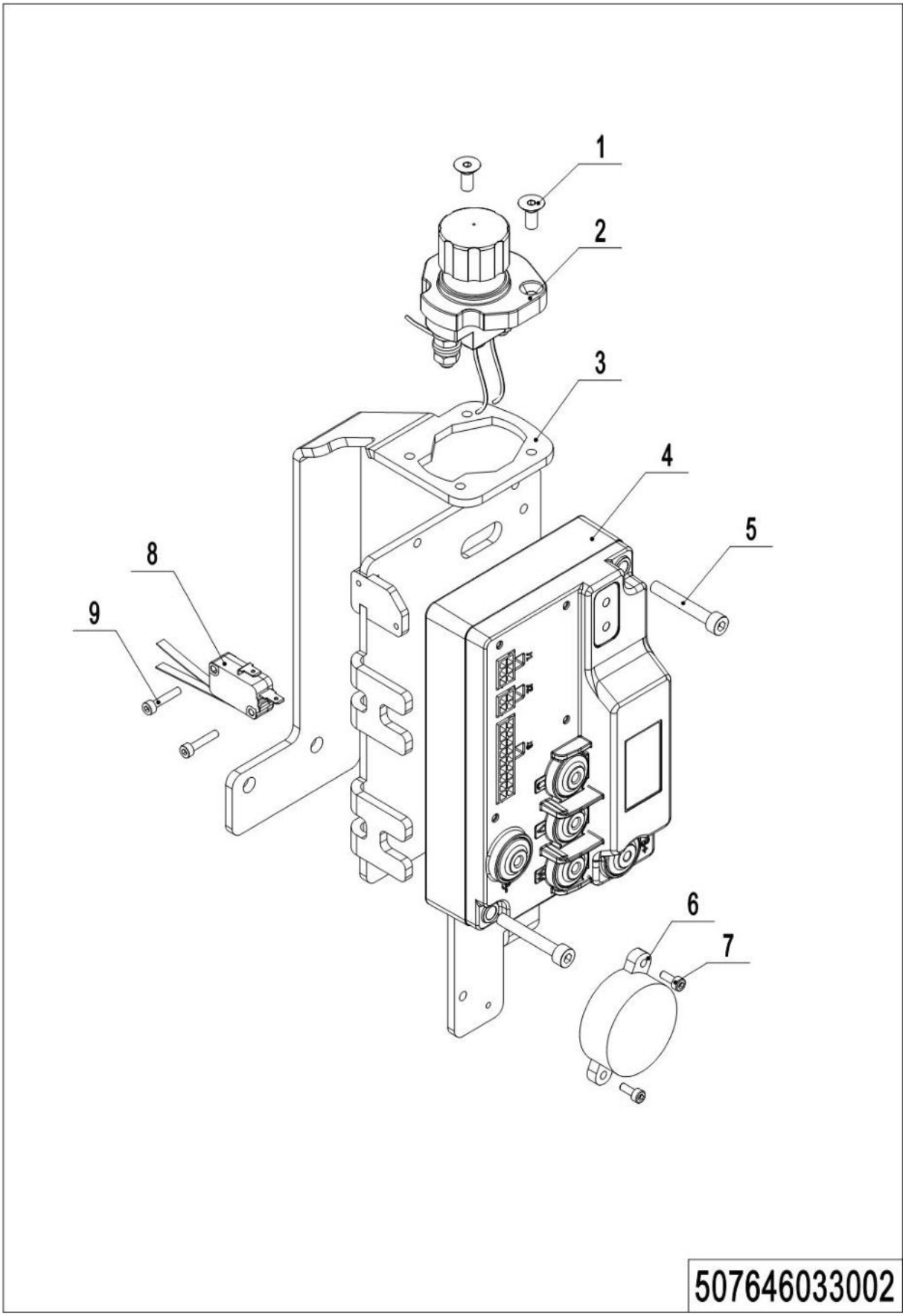

1= Supply as package. 2= Supply with constraints. 3= Phasing-out supply. 4= Supply as assembly. 5= Check other tables.

04 Controller(PTE20N Pro)(507646033002)

No.	Item Code	Mark	Item Description	Qty.	Substitute	Note
1	910200400010		Screw M5x10	2		
2	920200100027		Emergency Button	1		
3	508524010003		Mounting Rack	1		
4	508533010041	1	Controller	1		1226BL-4153
5	910200200027	1	Screw M5x35	2		
6	509998520063	1	Buzzer	1		
7	910200300002		Screw M3x8	2		
8	920200300012		Microswitch	1		
9	910200200004		Screw M3x16	2		

05 Charger (PTE15N Pro)(507746036501)

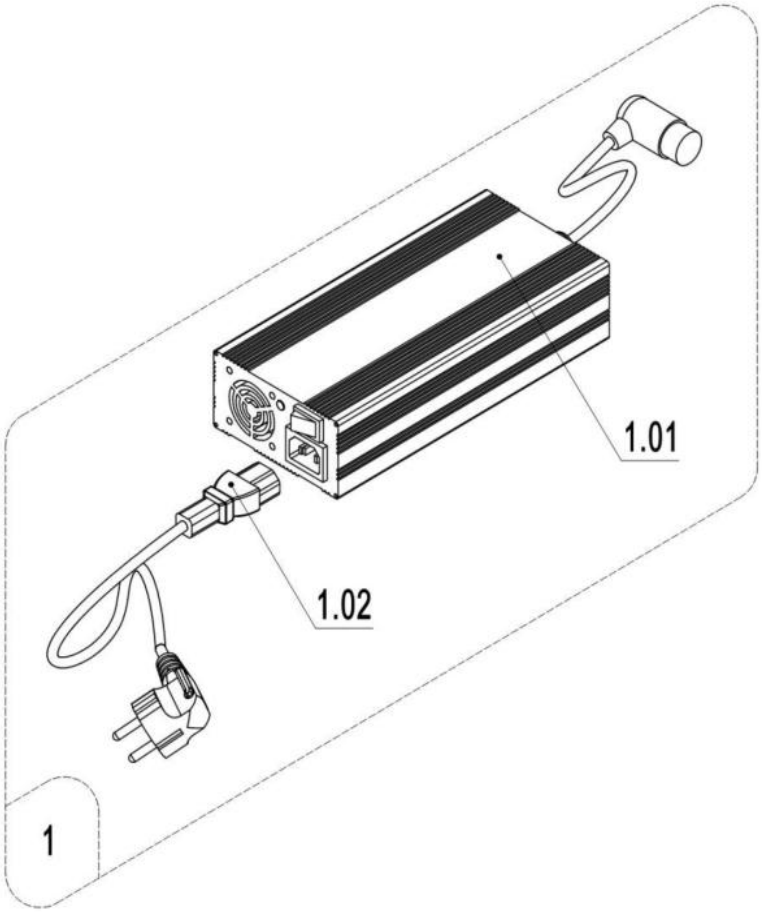

507746036501

1= Supply as package. 2= Supply with constraints. 3= Phasing-out supply. 4= Supply as assembly. 5= Check other tables.

05 Charger(PTE15N Pro) (507746036501)

No.	Item Code	Mark	Item Description	Qty.	Substitute	Note
1	508036510053-T01		Li-Charger TL24V12A(Asia)	1		TL
1	508036510054-T01		Li-Charger TL24V12A(ENG)	1		TL
1	508036510055-T01		Li-Charger TL24V12A(US)	1		TL
1	508036510056-T01		Li-Charger TL24V12A(EU)	1		TL
1	508036510057-T01		Li-Charger TL24V12A(AUS)	1		TL
1	508036510058-T01		Li-Charger TL24V12A(ITA)	1		TL
1	508036510059-T01		Li-Charger TL24V12A(CH)	1		TL
1	508036510060-T01		Li-Charger TL24V12A(ISR)	1		TL
1	508036510061-T01		Li-Charger TL24V12A(BRA)	1		TL
1	508036510062-T01		Li-Charger TL24V12A(ARG)	1		TL
1	508036510063-T01		Li-Charger TL24V12A(BIGZA)	1		TL
1	508036510066-T01		Li-Charger TL24V12A(DK)	1		TL
1	508036510078-T01		Li-Charger TL24V12A(ZA,S)	1		TL
1	508036510070-T01		Li-Charger TL24V8A(EU)	1		TL
1	508036510071-T01		Li-Charger TL24V8A(AUS)	1		TL
1	508036510072-T01		Li-Charger TL24V8A(ITA)	1		TL
1	508036510073-T01		Li-Charger TL24V8A(CH)	1		TL
1	508036510074-T01		Li-Charger TL24V8A(ISR)	1		TL
1	508036510075-T01		Li-Charger TL24V8A(BRA)	1		TL
1	508036510076-T01		Li-Charger TL24V8A(ARG)	1		TL
1	508036510077-T01		Li-Charger TL24V8A(ENG)	1		TL
1	508036510079-T01		Li-Charger TL24V8A(European and	1		TL
1	508036510080-T01		Li-Charger TL24V8A(ZA,S)	1		TL
1	508036510081-T01		Li-Charger TL24V8A(European and	1		TL
1	508036510082-T01		Li-Charger TL24V8A(BIGZA)	1		TL
1	508036510067-T01		Li-Charger SS24V8A(KR)	1		SS
1	508036510065-T01		Li-Charger SS24V8A(AUS RCM)	1		SS
1	508036510003-T01		Li-Charger SS24V8A(US)	1		SS
1.01	921000200590-T01		Li-Charger WT24V12A-CAN	1		TL
1.01	921000200597-T01		Li-Charger SS24V8A(RCM)	1		SS

05 Charger(PTE15N Pro) (507746036501) Continuation

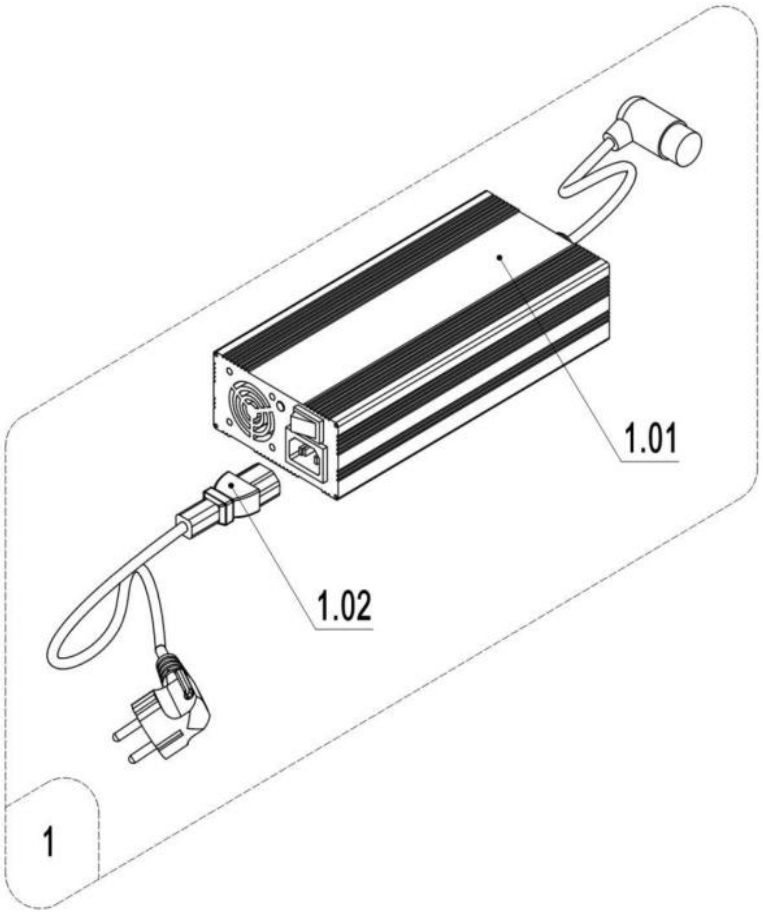

507746036501

05 Charger(PTE15N Pro) (507746036501) Continuation

No.	Item Code	Mark	Item Description	Qty.	Substitute	Note
1.01	921000200648-T01		Li-Charger WT24V8A(EU)	1		TL
1.01	921000200464-T01		Li-Charger SS24V8A(Asia-ENG)	1		SS
1.02	921500200021		Power Cord(Asia)	1		
1.02	921500200027		Power Cord(ENG)	1		
1.02	921500200023		Power Cord(USA)	1		
1.02	921500200022		Power Cord(EU)	1		
1.02	921500200024		Power Cord(AUS)	1		
1.02	921500200025		Power Cord(ITA)	1		
1.02	921500200026		Power Cord(CH)	1		
1.02	921500200028		Power Cord(ISR)	1		
1.02	921500200049		Power Cord(BRA)	1		
1.02	921500200050		Power Cord(ARG)	1		
1.02	921500200063		Power Cord(BIGZA)	1		
1.02	921500200064		Power Cord(ZA,S)	1		

06 Charger(PTE15N Pro)(507746036502)

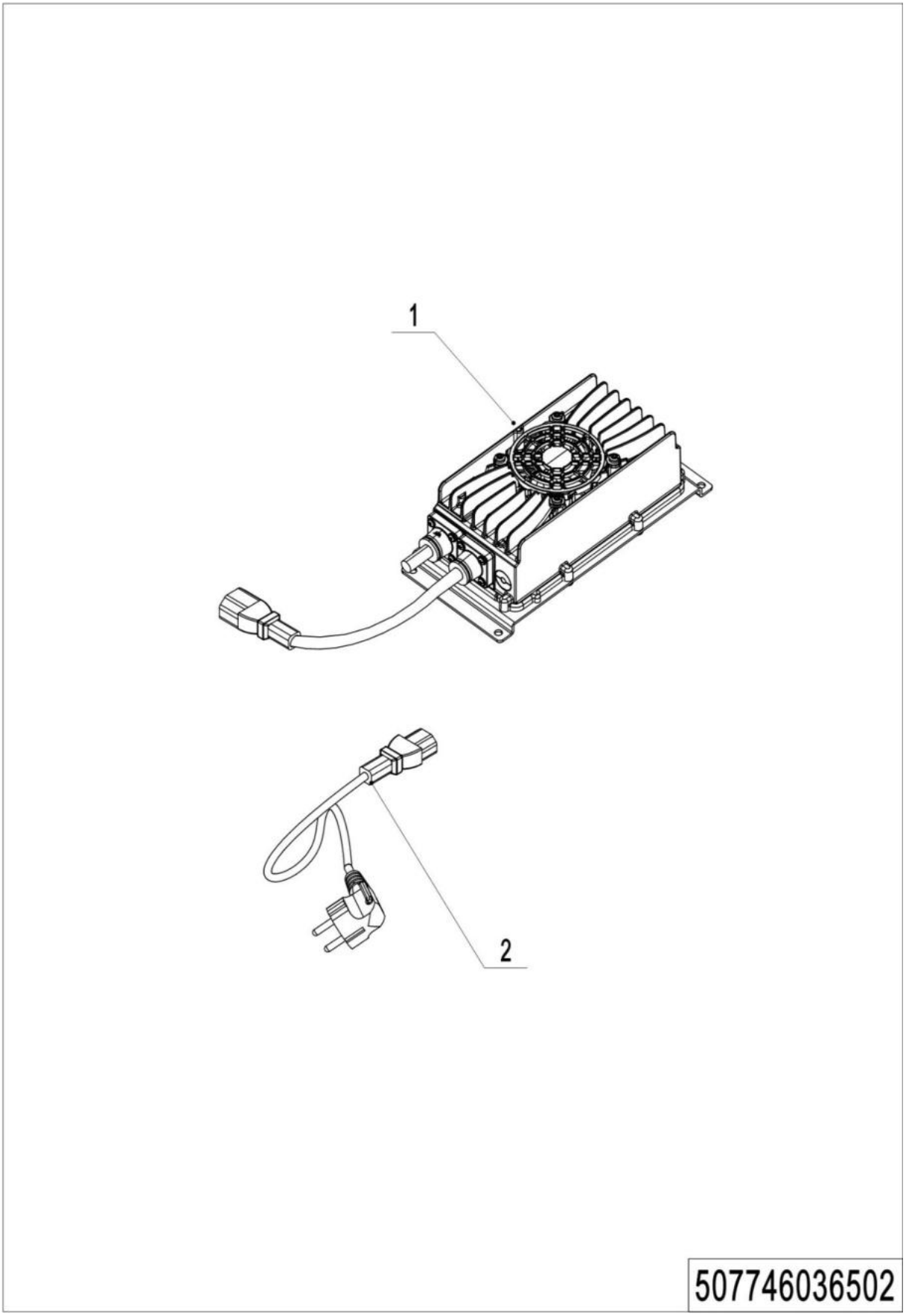

1= Supply as package. 2= Supply with constraints. 3= Phasing-out supply. 4= Supply as assembly. 5= Check other tables.

06 Charger(PTE15N Pro) (507746036502)

No.	Item Code	Mark	Item Description	Qty.	Substitute	Note
1	921000100112		Li-Charger24V18A	1		
1	921000100111		Li-Charger24V8A	1		
2	921500200005		Spring Cable(EU)	1		
2	921500200003		Spring Cable(AUS)	1		
2	921500200006		Spring Cable(ITA)	1		
2	921500200007		Spring Cable(CH)	1		
2	921500200029		Spring Cable(ISR)	1		
2	921500200061		Spring Cable(BRA)	1		
2	921500200037		Spring Cable(ARG)	1		
2	921500200008		Spring Cable(Asia)	1		
2	921500200004		Spring Cable(ENG)	1		
2	921500200002		Spring Cable(USA)	1		

07 Charger(PTE20N Pro) (507646036501)

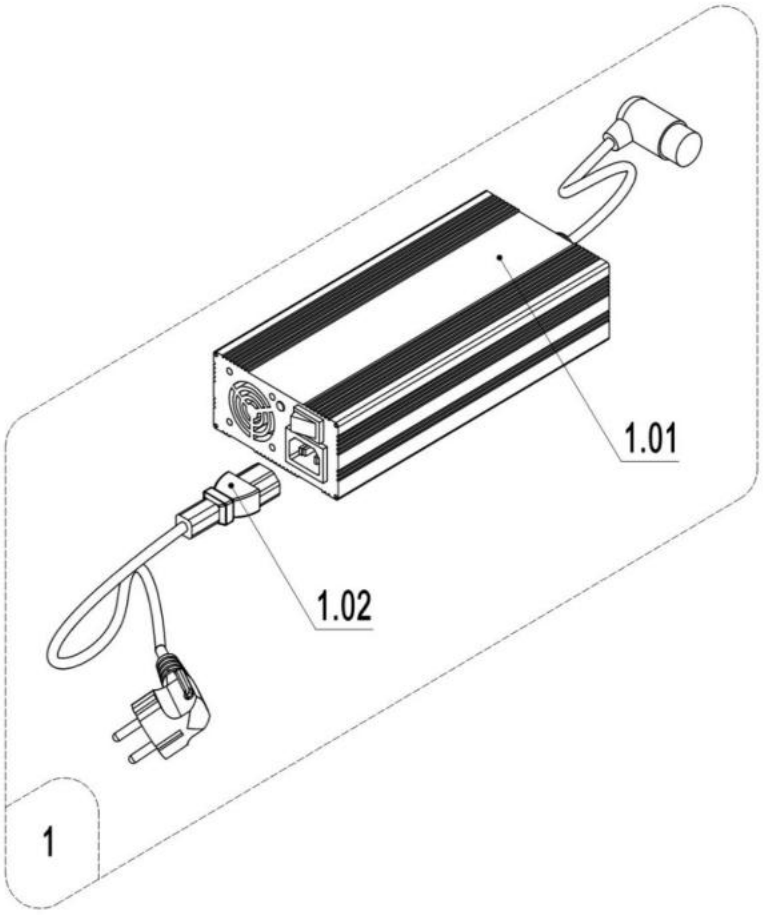

507646036501

1= Supply as package. 2= Supply with constraints. 3= Phasing-out supply. 4= Supply as assembly. 5= Check other tables.

07 Charger(PTE20N Pro) (507646036501)

No.	Item Code	Mark	Item Description	Qty.	Substitute	Note
1	508536510013-T01		Li-Charger 48V9A(Asia)	1		SS
1	508536510015-T01		Li-Charger 48V9A(US)	1		SS
1	508536510025-T01		Li-Charger 48V9A(EU)	1		TL
1	508536510026-T01		Li-Charger 48V9A(AUS)	1		TL
1	508536510027-T01		Li-Charger 48V9A(ITA)	1		TL
1	508536510028-T01		Li-Charger 48V9A(CH)	1		TL
1	508536510029-T01		Li-Charger 48V9A(ISR)	1		TL
1	508536510030-T01		Li-Charger 48V9A(BRA)	1		TL
1	508536510031-T01		Li-Charger 48V9A(ARG)	1		TL
1	508536510032-T01		Li-Charger 48V9A(ENG)	1		TL
1	508536510033-T01		Li-Charger 48V9A(BIGZA)	1		TL
1	508536510034-T01		Li-Charger 48V9A(ZA, S)	1		TL
1.01	921000200591-T01		Li-Charger SS48V9A-PLUG(Asia)	1		SS
1.01	921000200585-T01		Li-Charger SS48V9A-PLUG(US)	1		SS
1.01	921000200642-T01		Li-Charger WT48V9A(EU)	1		TL
1.02	921500200021		Power Cord(Asia)	1		
1.02	921500200027		Power Cord(ENG)	1		
1.02	921500200023		Power Cord(USA)	1		
1.02	921500200022		Power Cord(EU)	1		
1.02	921500200024		Power Cord(AUS)	1		
1.02	921500200025		Power Cord(ITA)	1		
1.02	921500200026		Power Cord(CH)	1		
1.02	921500200028		Power Cord(ISR)	1		
1.02	921500200049		Power Cord(BRA)	1		
1.02	921500200050		Power Cord(ARG)	1		
1.02	921500200063		Power Cord(BIGZA)	1		
1.02	921500200064		Power Cord(ZA,S)	1		

08 Charger(PTE20N Pro) (507646036502)

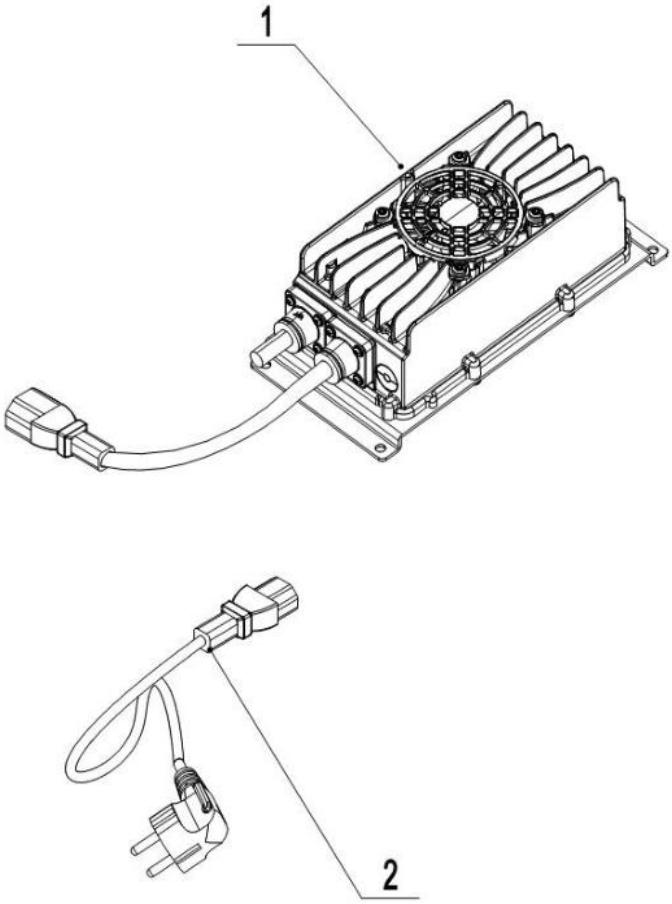

507646036502

1= Supply as package. 2= Supply with constraints. 3= Phasing-out supply. 4= Supply as assembly. 5= Check other tables.

08 Charger(PTE20N Pro) (507646036502)

No.	Item Code	Mark	Item Description	Qty.	Substitute	Note
1	921000100113		Li-Charger48V8A	1		TL
2	921500200005		Spring Cable(EU)	1		
2	921500200003		Spring Cable(AUS)	1		
2	921500200006		Spring Cable(ITA)	1		
2	921500200007		Spring Cable(CH)	1		
2	921500200029		Spring Cable(ISR)	1		
2	921500200061		Spring Cable(BRA)	1		
2	921500200037		Spring Cable(ARG)	1		
2	921500200008		Spring Cable(Asia)	1		
2	921500200004		Spring Cable(ENG)	1		
2	921500200002		Spring Cable(USA)	1		

09 Traction Battery(24V20Ah)(PTE15N Pro)(507746037001)

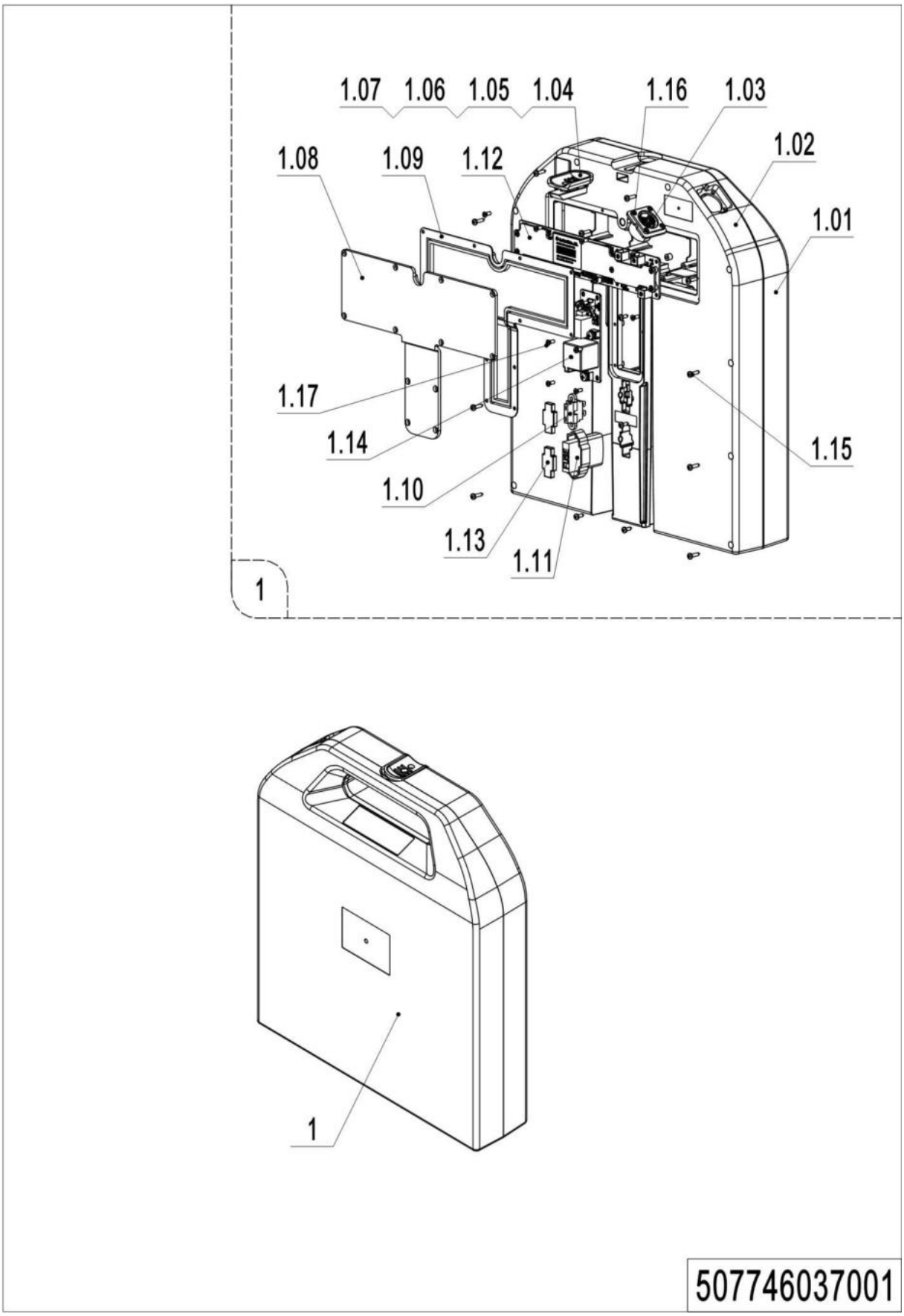

1= Supply as package. 2= Supply with constraints. 3= Phasing-out supply. 4= Supply as assembly. 5= Check other tables.

09 Traction Battery(24V20Ah)(PTE15N Pro) (507746037001)

No.	Item Code	Mark	Item Description	Qty.	Substitute	Note
1	920600100433		Li-Battery24V20Ah	1		
1.01	507798520001		Cover	1		
1.02	507798520002		Shell	1		
1.03	920400200259		Connector Assembly	1		
1.04	508098520023		Fixing Mount	1		
1.05	508098520022		Plastic Handle	1		
1.06	508098520024		Spring	1		
1.07	910200500011		Screw M3x10	2		
1.08	507798520003		Close Plate	1		
1.09	507798520004		Sealing Ring	1		
1.10	920100200016		Fuse	1		
1.11	920100200015		Fuse	1		
1.12	507798520005		NDNL1-BF8S20Ah-MND4	1		
1.13	509998520054		Plug	2		
1.14	507798520008		BF24-SPM3-CD	1		
1.15	507798520025		Screw	12		
1.16	507798520026		Screw M3	4		
1.17	507798520027		Screw M3	12		

10 Traction Battery(24V40Ah)(PTE15N Pro)(507746037002)

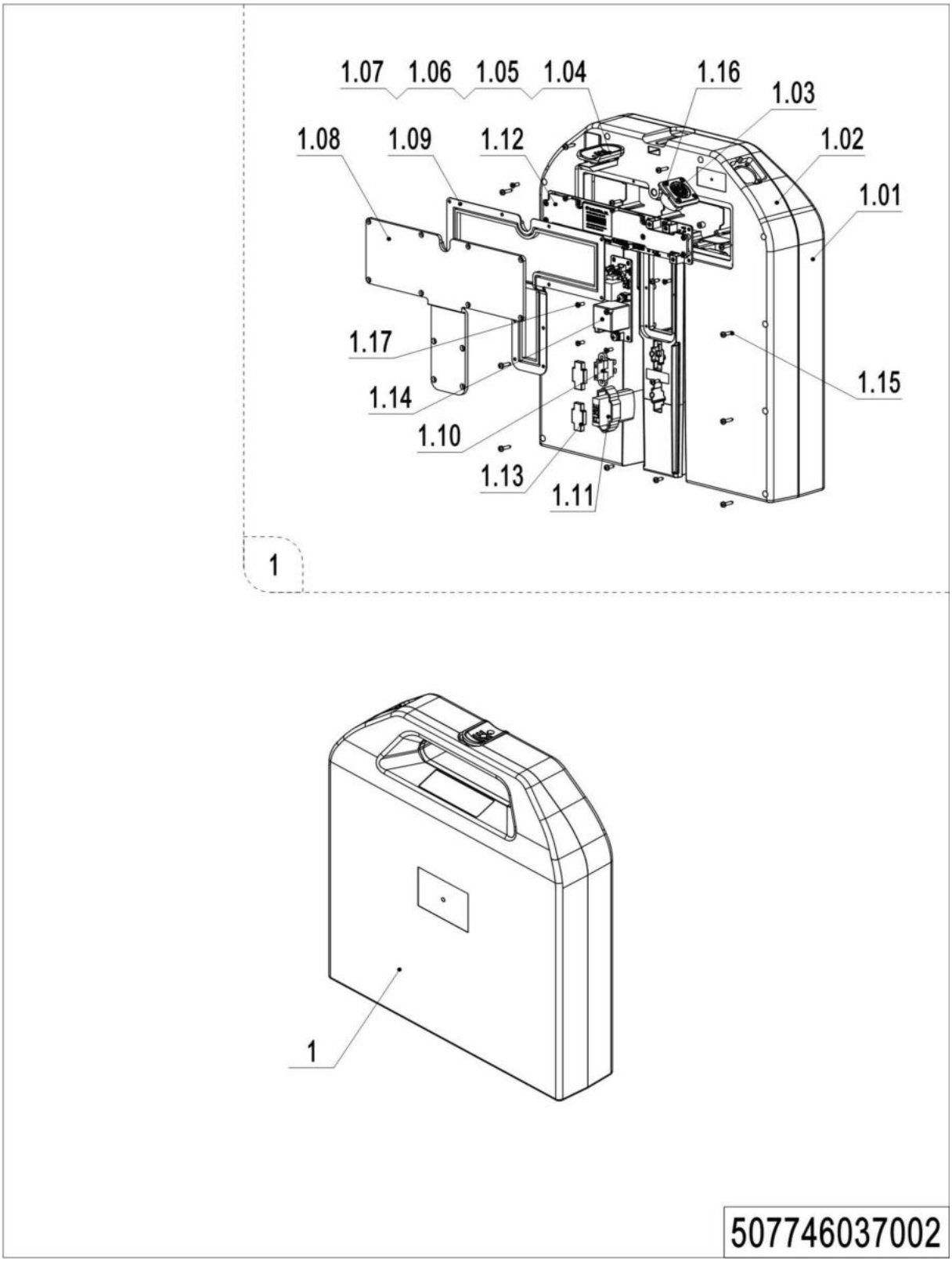

10 Traction Battery(24V40Ah)(PTE15N Pro) (507746037002)

No.	Item Code	Mark	Item Description	Qty.	Substitute	Note
1	920600100434		Li-Battery24V40Ah	1		
1.01	507798520001		Cover	1		
1.02	507798520002		Shell	1		
1.03	920400200260		Connector Assembly	1		
1.04	508098520023		Fixing Mount	1		
1.05	508098520022		Plastic Handle	1		
1.06	508098520024		Spring	1		
1.07	910200500011		Screw M3x10	2		
1.08	507798520003		Close Plate	1		
1.09	507798520004		Sealing Ring	1		
1.10	920100200016		Fuse	1		
1.11	920100200015		Fuse	1		
1.12	507798520006		NDNL1-BF8S40Ah-MND4	1		
1.13	509998520054		Plug	2		
1.14	507798520008		BF24-SPM3-CD	1		
1.15	507798520025		Screw	12		
1.16	507798520026		Screw M3	4		
1.17	507798520027		Screw M3	12		

11 Traction Battery(24V40Ah)（PTE15N Pro）(507746037003)

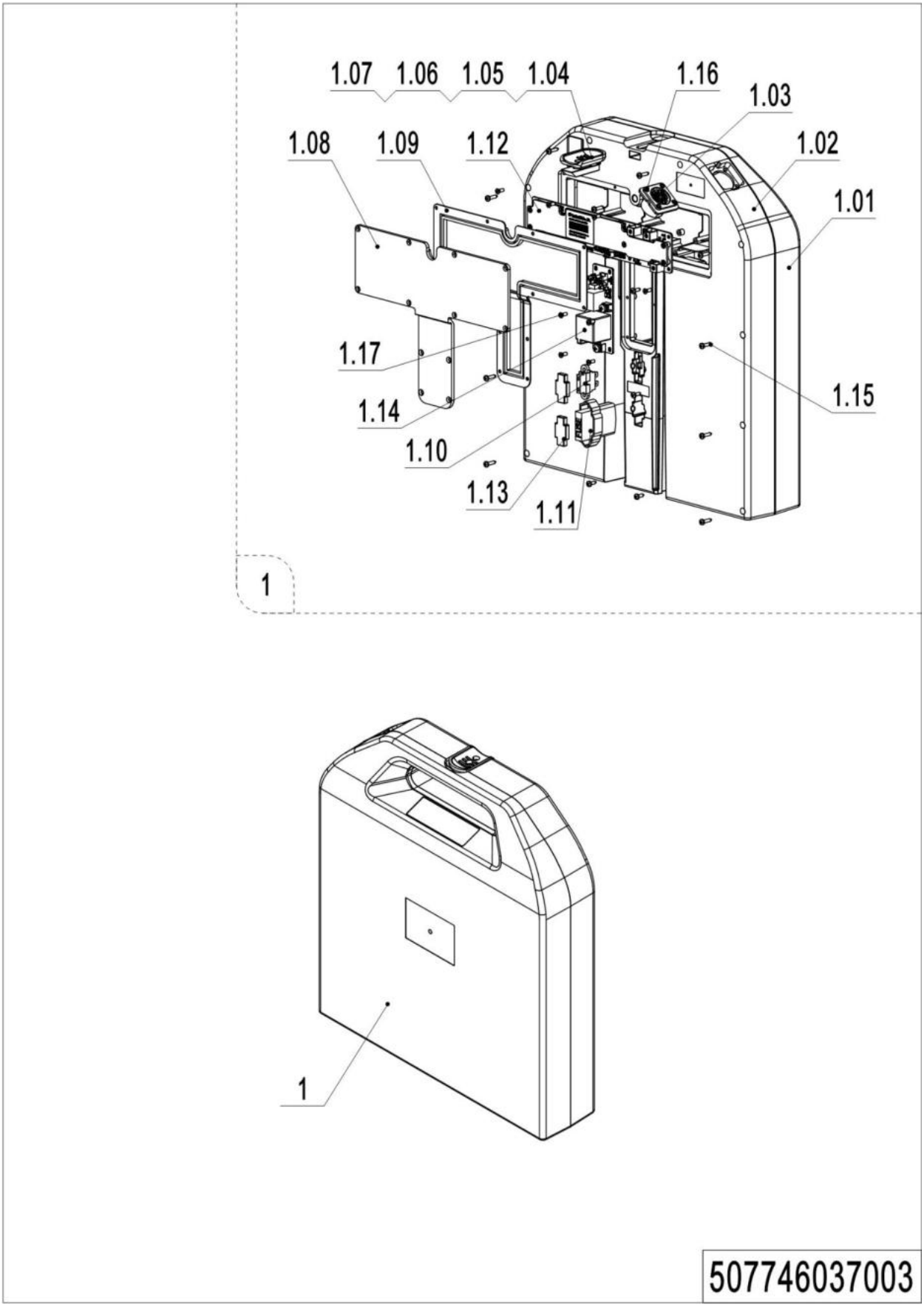

11 Traction Battery(24V40Ah)(PTE15N Pro)(507746037003)

No.	Item Code	Mark	Item Description	Qty.	Substitute	Note
1	920600100639		Li-Battery24V40Ah	1		
1.01	507798520001		Cover	1		
1.02	507798520002		Shell	1		
1.03	920400200260		Connector Assembly	1		
1.04	508098520023		Fixing Mount	1		
1.05	508098520022		Plastic Handle	1		
1.06	508098520024		Spring	1		
1.07	910200500011		Screw M3x10	2		
1.08	507798520003		Close Plate	1		
1.09	507798520004		Sealing Ring	1		
1.10	920100200016		Fuse	1		
1.11	920100200015		Fuse	1		
1.12	507798520006		NDNL1-BF8S40Ah-MND4	1		
1.13	509998520054		Plug	2		
1.14	507798520011		BF24-SPM3-CD-H	1		
1.15	507798520025		Screw	12		
1.16	507798520026		Screw M3	4		
1.17	507798520027		Screw M3	12		

12 Traction Battery(48V20Ah)(PTE20N Pro)(507646037001)

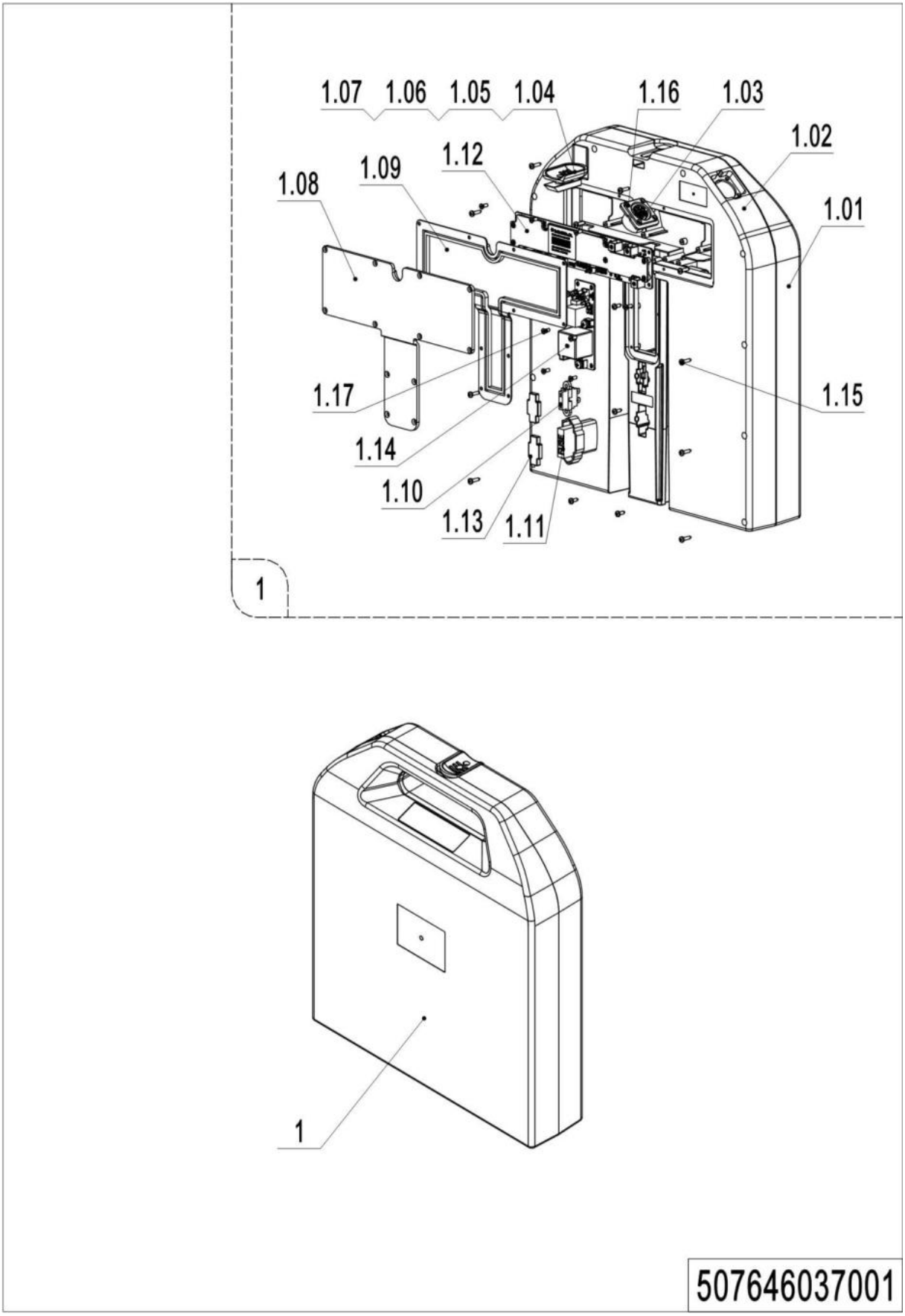

12 Traction Battery(48V20Ah)(PTE20N Pro)(507646037001)

No.	Item Code	Mark	Item Description	Qty.	Substitute	Note
1	920600100435		Li-Battery48V20Ah	1		
1.01	507798520001		Cover	1		
1.02	507798520002		Shell	1		
1.03	920400200261		Connector Assembly	1		
1.04	508098520023		Fixing Mount	1		
1.05	508098520022		Plastic Handle	1		
1.06	508098520024		Spring	1		
1.07	910200500011		Screw M3x10	2		
1.08	507798520003		Close Plate	1		
1.09	507798520004		Sealing Ring	1		
1.10	920100200017		Fuse	1		
1.11	920100200018		Fuse	1		
1.12	507798520007		NDNL1-BF15S20Ah-MND3	1		
1.13	509998520054		Plug	2		
1.14	507798520009		BF48-SPM3-CD	1		
1.15	507798520025		Screw	12		
1.16	507798520026		Screw M3	4		
1.17	507798520027		Screw M3	12		

13 Traction Battery(48V20Ah)(PTE20N Pro)(507646037002)

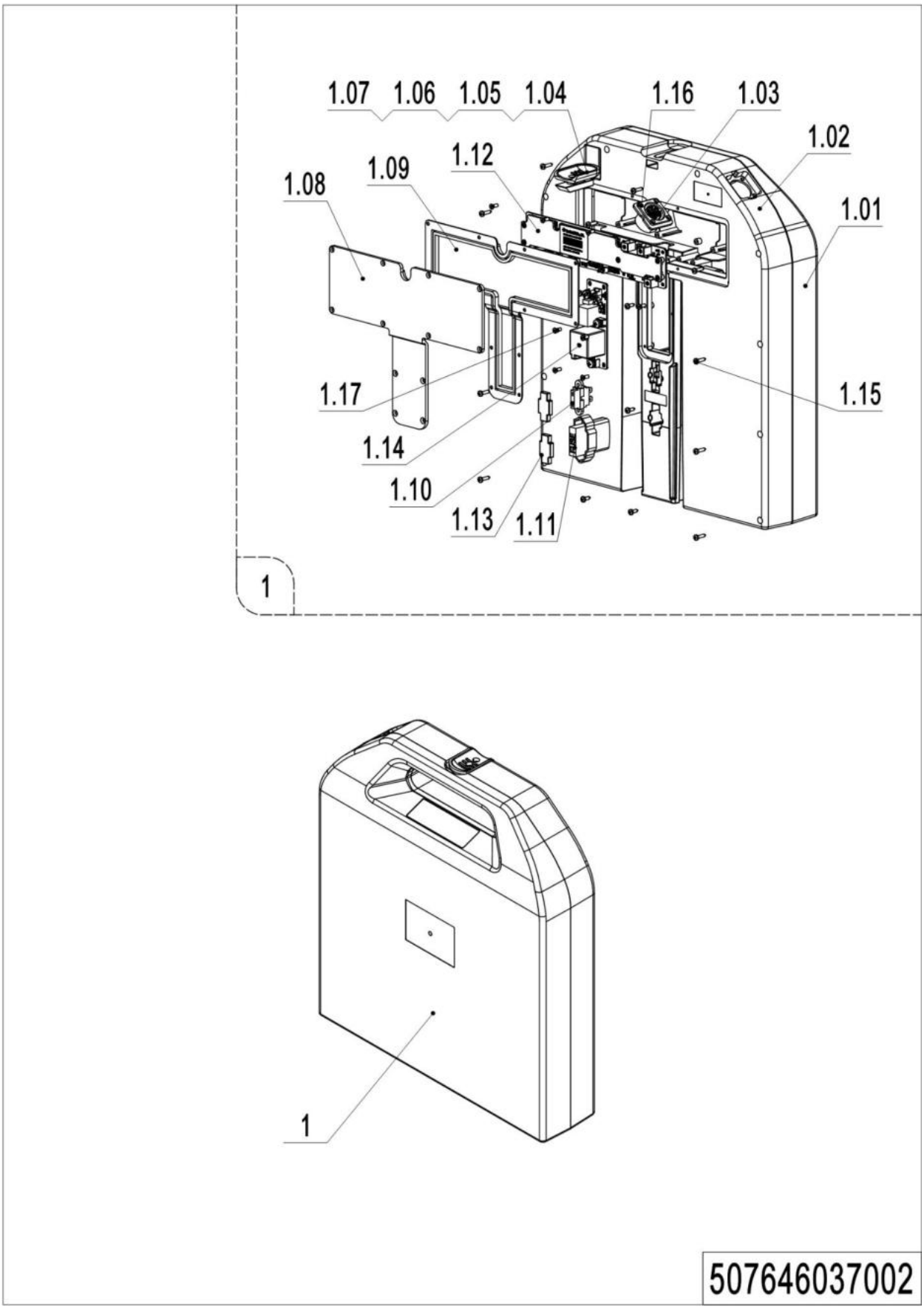

13 Traction Battery(48V20Ah)(PTE20N Pro)(507646037002)

No.	Item Code	Mark	Item Description	Qty.	Substitute	Note
1	920600100640		Li-Battery48V20Ah	1		
1.01	507798520001		Cover	1		
1.02	507798520002		Shell	1		
1.03	920400200261		Connector Assembly	1		
1.04	508098520023		Fixing Mount	1		
1.05	508098520022		Plastic Handle	1		
1.06	508098520024		Spring	1		
1.07	910200500011		Screw M3x10	2		
1.08	507798520003		Close Plate	1		
1.09	507798520004		Sealing Ring	1		
1.10	920100200017		Fuse	1		
1.11	920100200018		Fuse	1		
1.12	507798520007		NDNL1-BF15S20Ah-MND3	1		
1.13	509998520054		Plug	2		
1.14	507798520012		BF48-SPM3-CD-H	1		
1.15	507798520025		Screw	12		
1.16	507798520026		Screw M3	4		
1.17	507798520027		Screw M3	12		

Chapter 6: Special Parts

01 Load Backrest(507746040501)

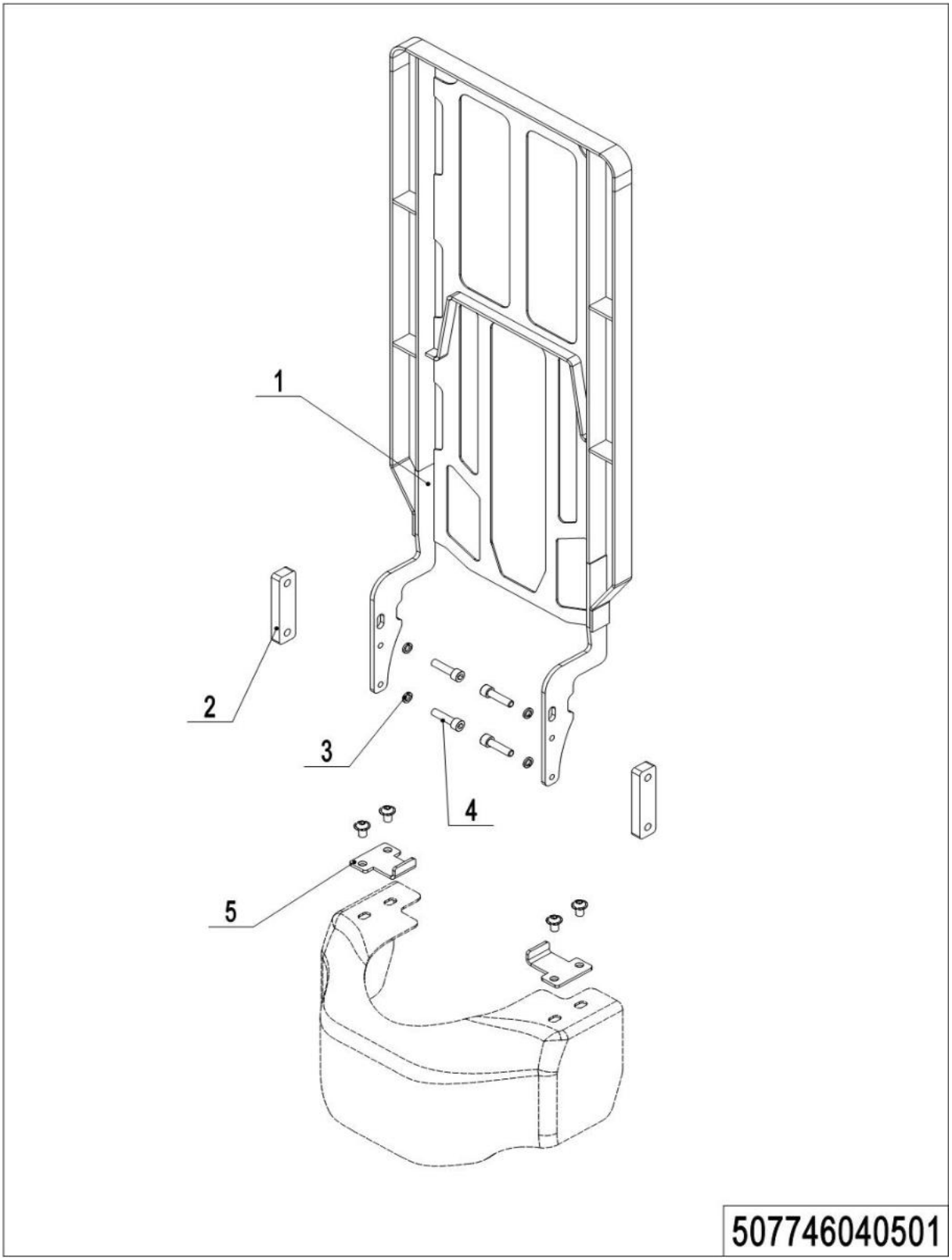

1= Supply as package. 2= Supply with constraints. 3= Phasing-out supply. 4= Supply as assembly. 5= Check other tables.

01 Load Backrest(507746040501)

No.	Item Code	Mark	Item Description	Qty.	Substitute	Note
1	507740510001		Load Backrest	1		
1	507740510002		Load Backrest	1		
1	507740510003		Load Backrest	1		
2	508040520000	1	Subplate	2		
3	910400500007	1	Spring Washer	4		
4	910200200079	1	Screw M10x40	4		
5	508040520017	1	Stop Plate	2		

02 Charging cabinets(PTE15N Pro)(507746040502)

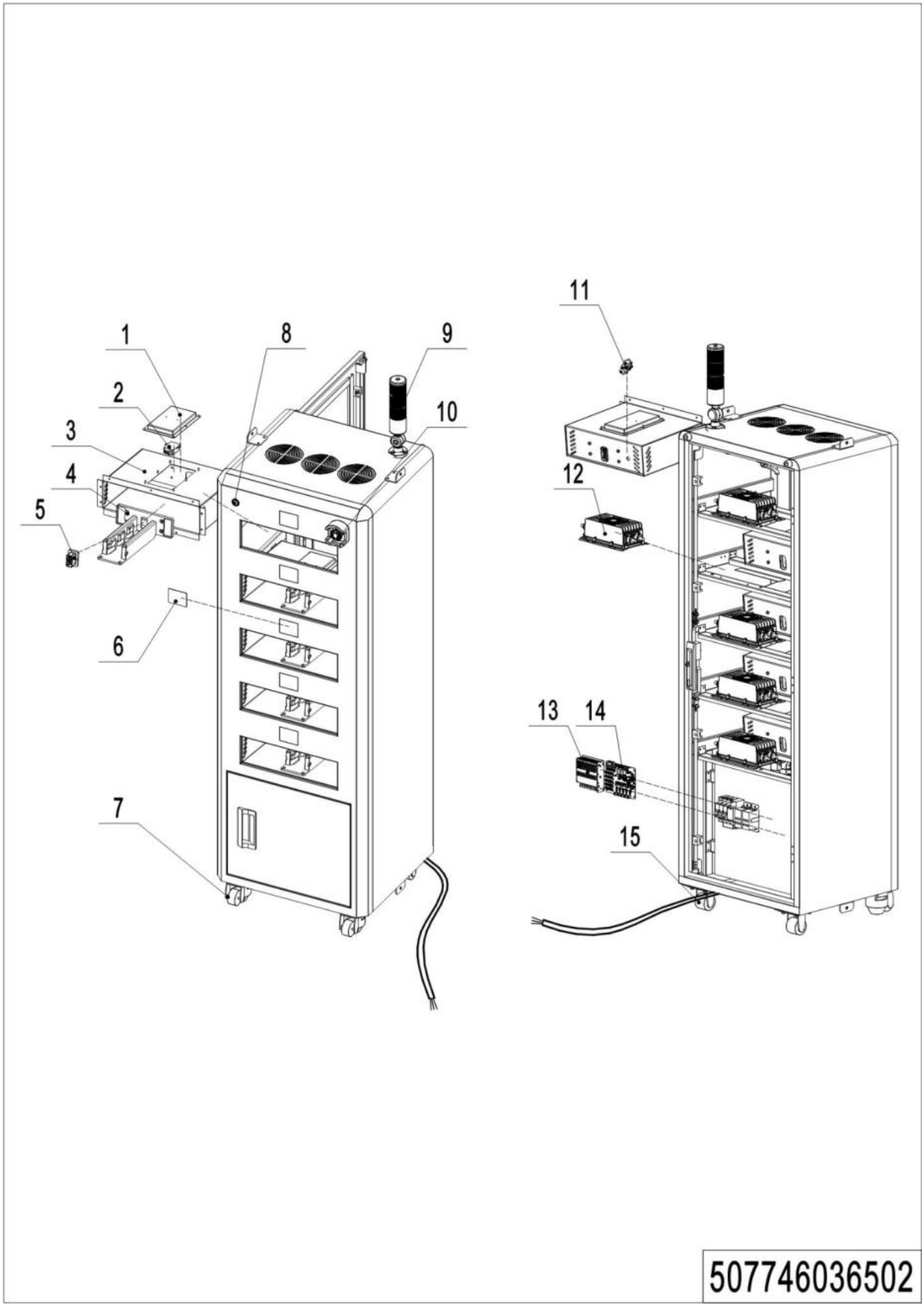

1= Supply as package. 2= Supply with constraints. 3= Phasing-out supply. 4= Supply as assembly. 5= Check other tables.

02 Charging cabinets(PTE15N Pro)(507746040502)

No.	Item Code	Mark	Item Description	Qty.	Substitute	Note
1	507798520049		Fixing Sheet Metal	5		
2	507798520050		Aerosol	5		
3	507798520051		Battery Compartment	5		
4	920600100436	1	Guiding Column	5		
5	507798520052	1	Wire Harness Assembly	5		
6	507798520054	1	Display Screen	5		
7	507798520058	1	Unidirectional Wheel	2		
8	507798520055		Switch	1		
9	507798520056		Beacon	1		
10	507798520057		Emergency Stop Button	1		
11	507798520059		Microswitch	5		
12	507798520060		Charger	5		
13	507798520063		Module	1		
14	507798520062		Main Control Board	1		
15	507798520064		Swivel Caster	2		

1= Supply as package. 2= Supply with constraints. 3= Phasing-out supply. 4= Supply as assembly. 5= Check other tables.

03 Charging cabinets(PTE20N Pro)(507646040501)

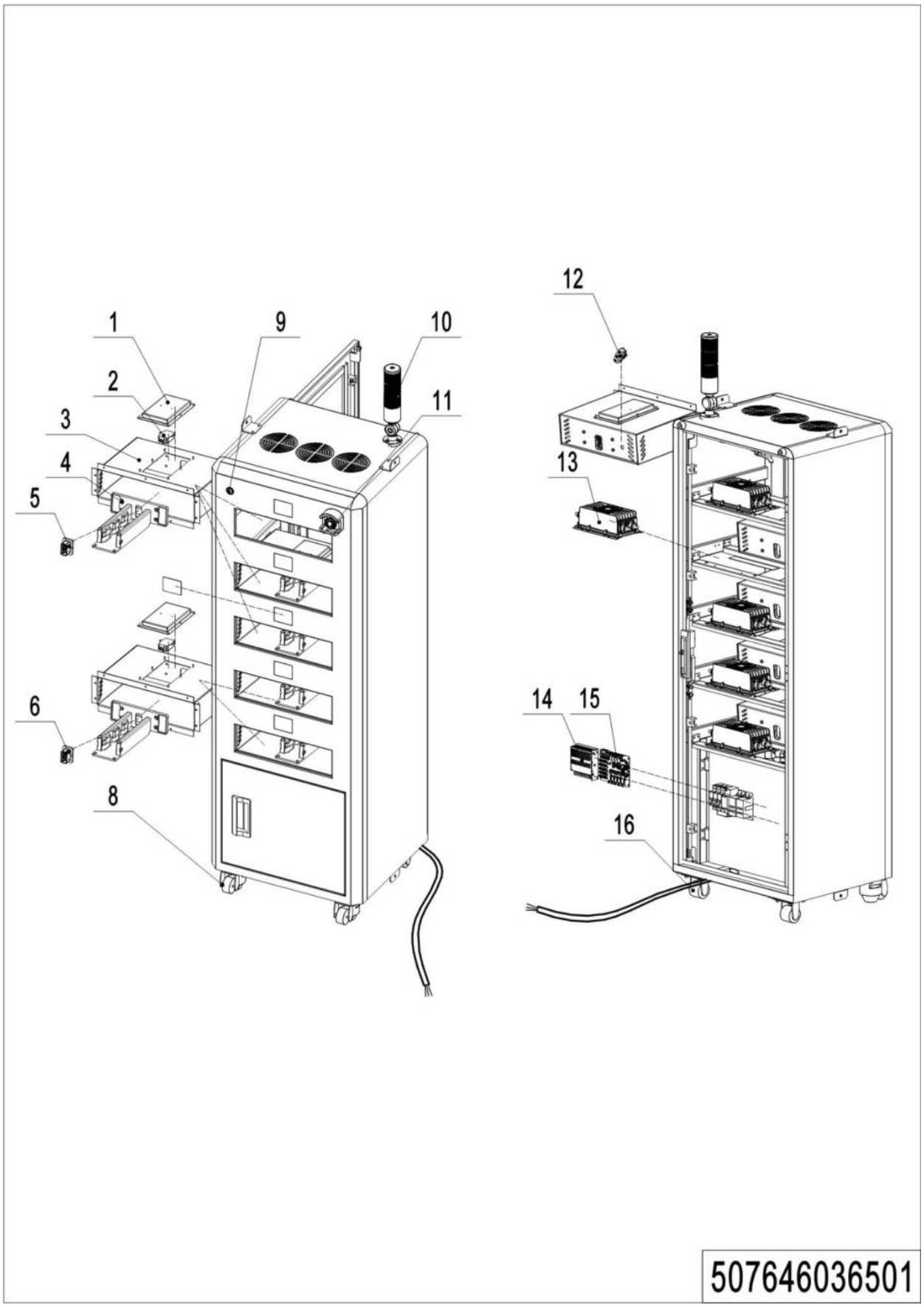

1= Supply as package. 2= Supply with constraints. 3= Phasing-out supply. 4= Supply as assembly. 5= Check other tables.

03Charging cabinets(PTE20N Pro)(507646040501)

No.	Item Code	Mark	Item Description	Qty.	Substitute	Note
1	507798520049		Fixing Sheet Metal	5		
2	507798520050		Aerosol	5		
3	507798520051		Battery Compartment	5		
4	920600100436		Guiding Column	5		
5	507798520052		Wire Harness Assembly	3		
6	507798520053		Wire Harness Assembly	2		
7	507798520054		Display Screen	5		
8	507798520058		Unidirectional Wheel	2		
9	507798520055		Switch	1		
10	507798520056		Beacon	1		
11	507798520057		Emergency Stop Button	1		
12	507798520059		Microswitch	5		
13	507798520060		Charger	5		
14	507798520063		Module	1		
15	507798520062		Main Control Board	1		
16	507798520064		Swivel Caster	2		

04 Charging cabinets(PTE20N Pro)(507646040502)

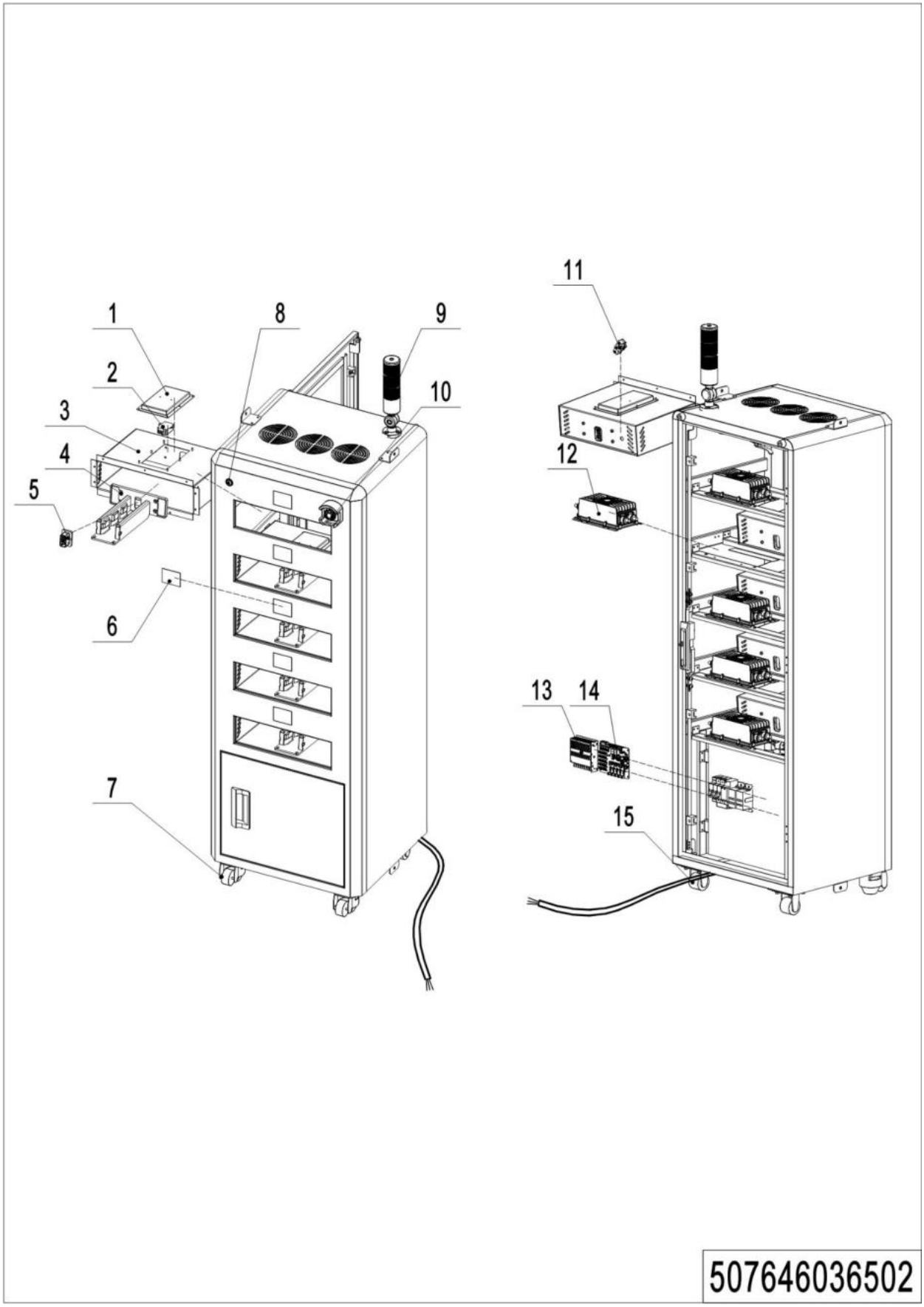

1= Supply as package. 2= Supply with constraints. 3= Phasing-out supply. 4= Supply as assembly. 5= Check other tables.

04Charging cabinets(PTE20N Pro)(507646040502)

No.	Item Code	Mark	Item Description	Qty.	Substitute	Note
1	507798520049		Fixing Sheet Metal	5		
2	507798520050		Aerosol	5		
3	507798520051		Battery Compartment	5		
4	920600100436		Guiding Column	5		
5	507798520053		Wire Harness Assembly	5		
6	507798520054		Display Screen	5		
7	507798520058		Unidirectional Wheel	2		
8	507798520055		Switch	1		
9	507798520056		Beacon	1		
10	507798520057		Emergency Stop Button	1		
11	507798520059		Microswitch	5		
12	507798520060		Charger	5		
13	507798520063		Module	1		
14	507798520062		Main Control Board	1		
15	507798520064		Swivel Caster	2		

1= Supply as package. 2= Supply with constraints. 3= Phasing-out supply. 4= Supply as assembly. 5= Check other tables.

Chapter 7: Others

01 Labels and Decals-EU(PTE15N Pro)(507746047001)

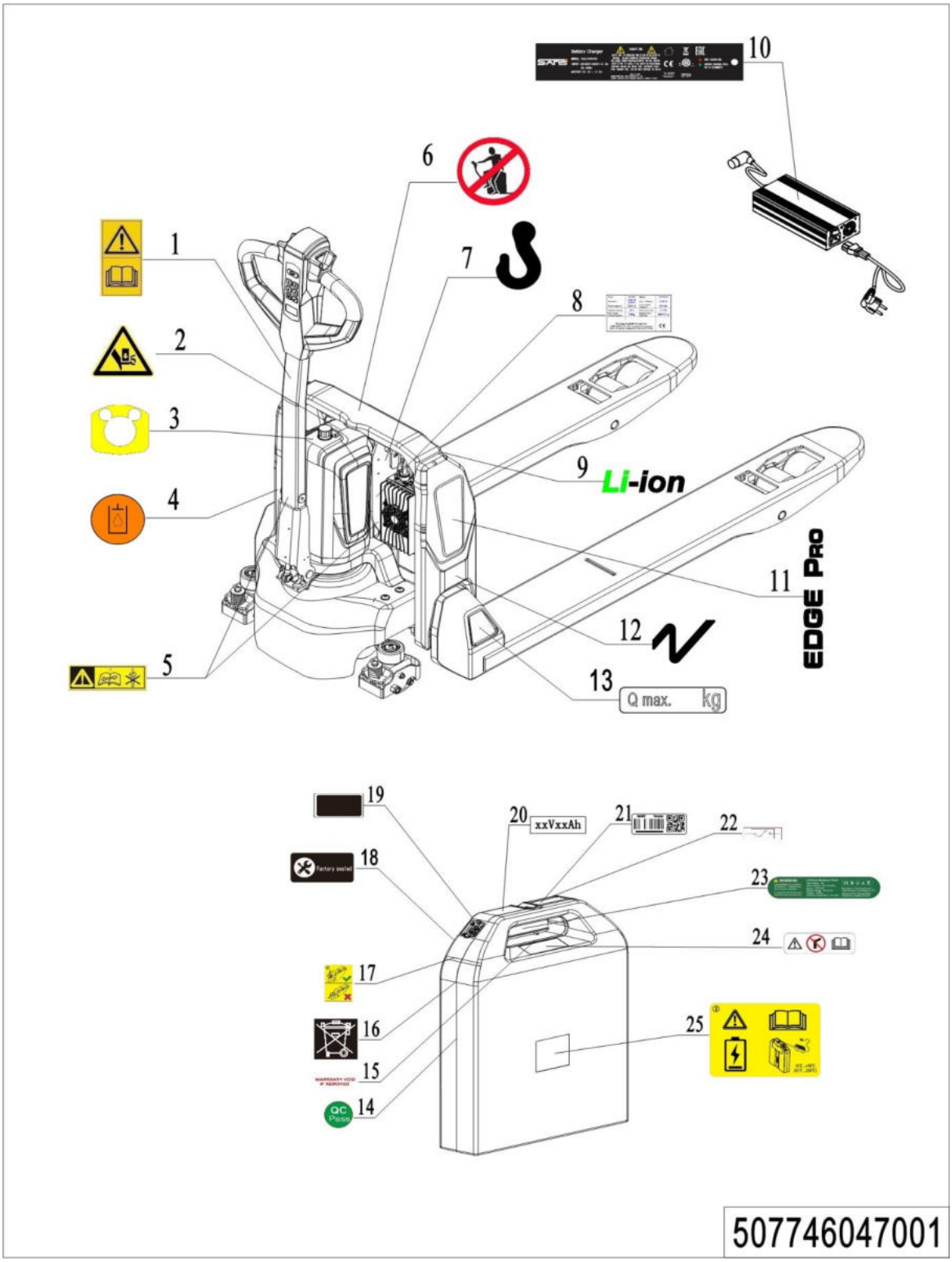

01 Labels and Decals-EU(PTE15N Pro)(507746047001)

No.	Item Code	Mark	Item Description	Qty.	Substitute	Note
1	941200300002		Label	1		
2	508047020007		Label	1		
3	508047020000		Label	1		
4	941200300003		Label	1		
5	508047020004		Label	2		
6	941200100003		Label	1		
7	941200300001		Label	2		
8	507747520050		Identification Plate	1		540x1150-24v20Ah
8	507747520051		Identification Plate	1		540x1150-24v40Ah
8	507747520052		Identification Plate	1		685x1150-24v20Ah
8	507747520053		Identification Plate	1		685x1150-24v40Ah
9	507798520028		Label	1		
10	508047520005		Label	1		
11	507747020005		Label	1		
12	510847020003		Label	2		
13	507747020002		Label	2		
14	510847020015		Label	1		
15	510817020014		Label	1		
16	508047020015		Label	1		
17	507798520030		Label	1		
18	507798520031		Label	1		
19	507798520032		Label	1		
20	507798520033		Label	1		24V20Ah
20	507798520034		Label	1		24V40Ah
20	507798520035		Label	1		24V40Ah Battery heating
21	507798520036		Label	2		
22	510847020008		Label	1		
23	507798520037		Identification Plate	1		24V20Ah
23	507798520038		Identification Plate	1		24V40Ah
23	507798520039		Identification Plate	1		24V40Ah Battery heating

01 Labels and Decals-EU(PTE15N Pro)(507746047001) Continuation

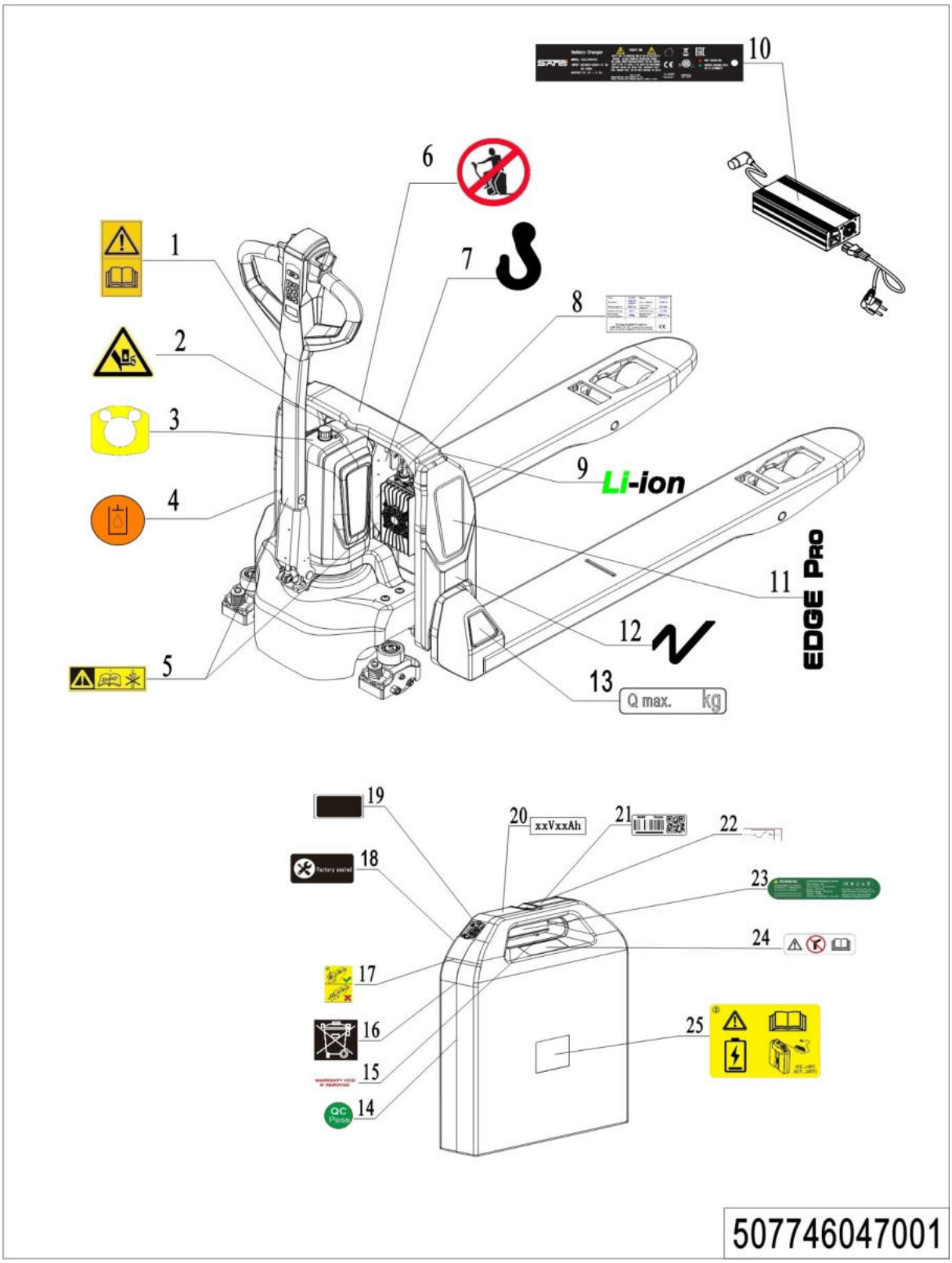

01 Labels and Decals-EU(PTE15N Pro)(507746047001) Continuation

No.	Item Code	Mark	Item Description	Qty.	Substitute	Note
24	510847020013		Label	1		
25	507798520040		Label	1		

1= Supply as package. 2= Supply with constraints. 3= Phasing-out supply. 4= Supply as assembly. 5= Check other tables.

02 Labels and Decals-US(PTE15N Pro)(507746047002)

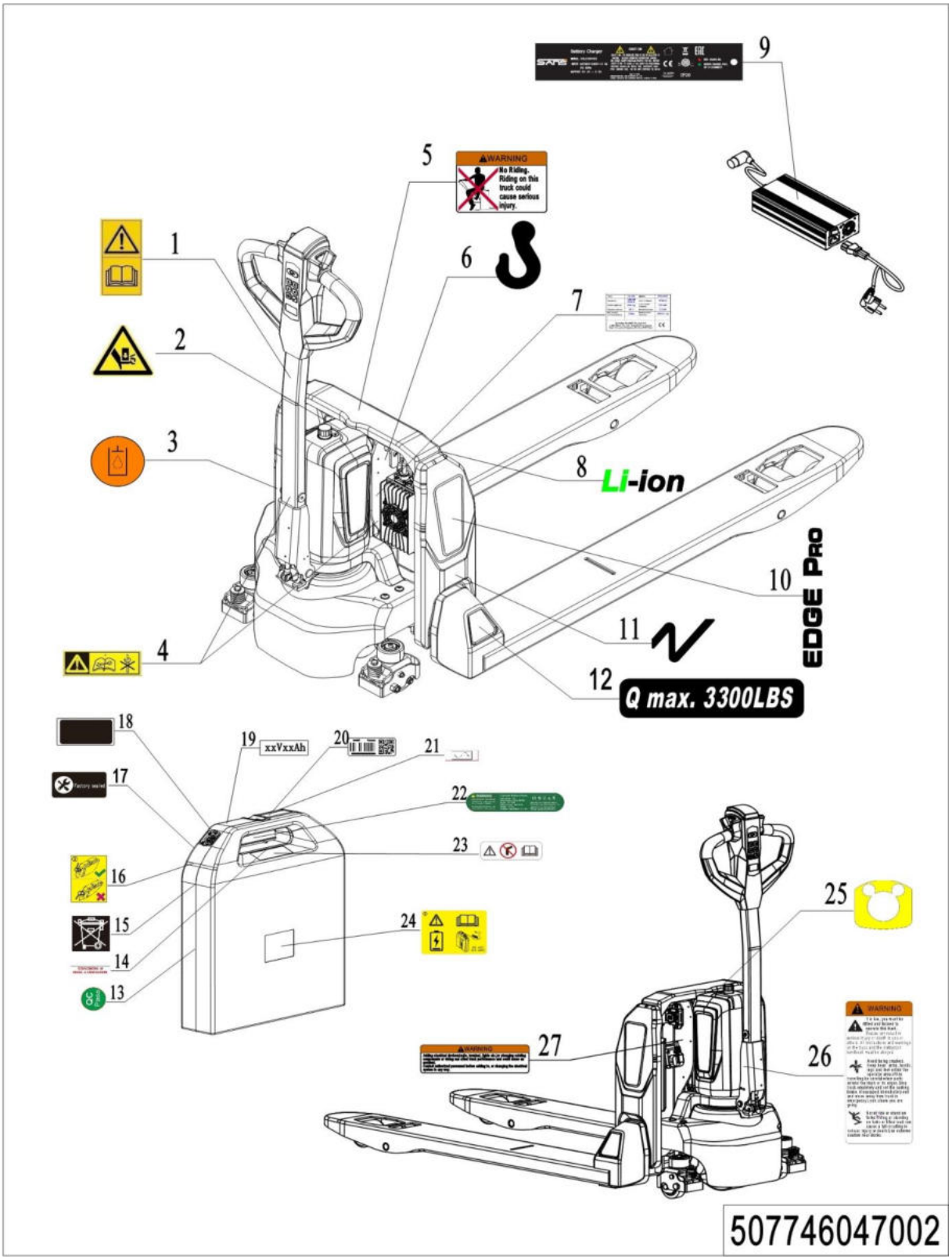

1= Supply as package. 2= Supply with constraints. 3= Phasing-out supply. 4= Supply as assembly. 5= Check other tables.

02 Labels and Decals-US(PTE15N Pro)(507746047002)

No.	Item Code	Mark	Item Description	Qty.	Substitute	Note
1	941200300002		Label	1		
2	508047020007		Label	1		
3	941200300003		Label	1		
4	508047020004		Label	2		
5	941200100011		Label	1		
6	941200300001		Label	2		
7	507747520050		Truck data plate	1		540x1150-24v20Ah
7	507747520051		Identification Plate	1		540x1150-24v40Ah
7	507747520052		Identification Plate	1		685x1150-24v20Ah
7	507747520053		Identification Plate	1		685x1150-24v40Ah
8	507798520028		Label	1		
9	509947020005		Label	1		
10	507747020005		Label	1		
11	510847020003		Label	2		
12	941200200016		Label	2		
13	510847020015		Label	1		
14	510817020014		Label	1		
15	508047020015		Label	1		
16	507798520030		Label	1		
17	507798520031		Label	1		
18	507798520032		Label	1		
19	507798520033		Label	1		24V20Ah
19	507798520034		Label	1		24V40Ah
19	507798520035		Label	1		24V40Ah Battery heating
20	507798520036		Label	2		
21	510847020008		Label	1		
22	507798520037		Identification Plate	1		24V20Ah
22	507798520038		Identification Plate	1		24V40Ah
22	507798520039		Identification Plate	1		24V40Ah Battery heating
23	510847020013		Label	1		

02 Labels and Decals-US(PTE15N Pro)(507746047002) Continuation

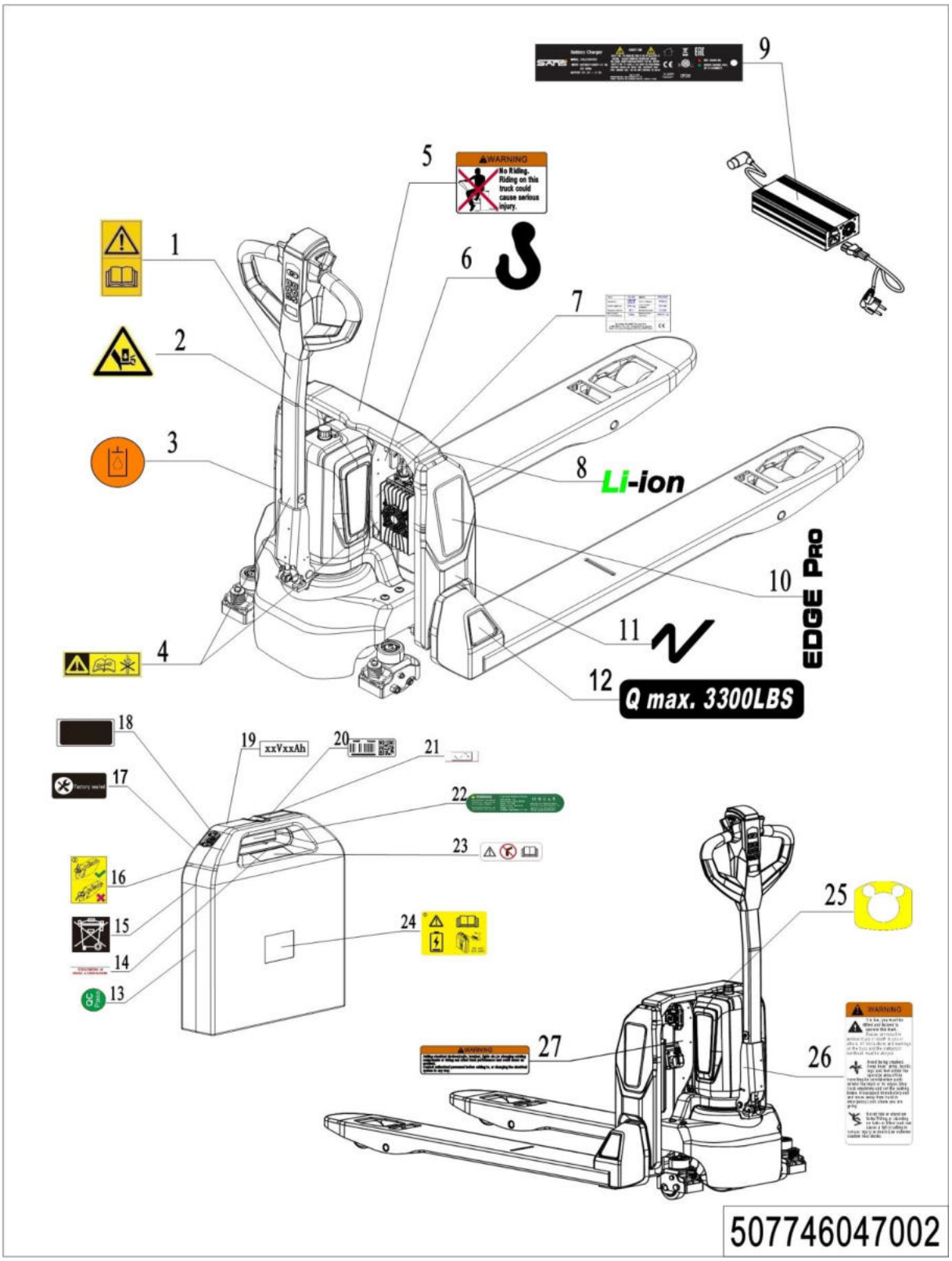

02 Labels and Decals-US(PTE15N Pro)(507746047002) Continuation

No.	Item Code	Mark	Item Description	Qty.	Substitute	Note
24	507798520040		Label	1		
25	508047020000		Label	1		
26	941200100009		Label	1		
27	941200100010		Label	1		

03 Labels and Decals-EU(PTE20N Pro)(507646047001)

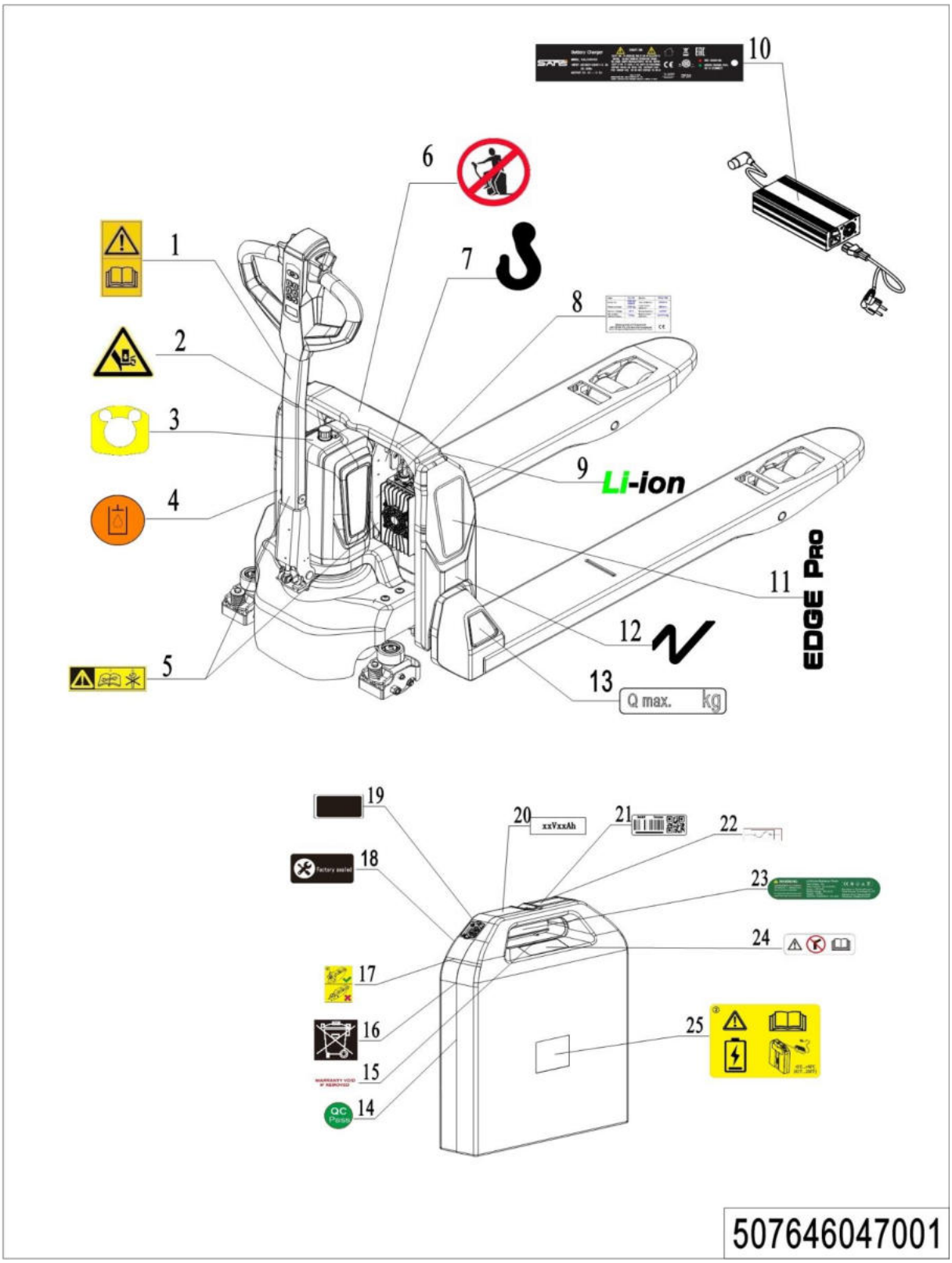

03 Labels and Decals-EU(PTE20N Pro)(507646047001)

No.	Item Code	Mark	Item Description	Qty.	Substitute	Note
1	941200300002		Label	1		
2	508047020007		Label	1		
3	508047020000		Label	1		
4	941200300003		Label	1		
5	508047020004		Label	2		
6	941200100003		Label	1		
7	941200300001		Label	2		
8	507647520050		Identification Plate	1		540x1150-48v20Ah
8	507647520051		Identification Plate	1		685x1150-48v20Ah
9	507798520028		Label	1		
10	508047520005		Label	1		
11	507747020005		Label	1		
12	510847020003		Label	2		
13	507647020000		Label	2		
14	510847020015		Label	1		
15	510817020014		Label	1		
16	508047020015		Label	1		
17	507798520030		Label	1		
18	507798520031		Label	1		
19	507798520032		Label	1		
20	507698520002		Label	1		48V20Ah
20	507698520003		Label	1		48V20Ah Battery heating
21	507698520004		Label	2		
22	510847020008		Label	1		
23	507698520005		Identification Plate	1		48V20Ah
23	507698520006		Identification Plate	1		48V20Ah Battery heating
24	510847020013		Label	1		
25	507798520040		Label	1		

04 Labels and Decals-US(PTE20N Pro)(507646047002)

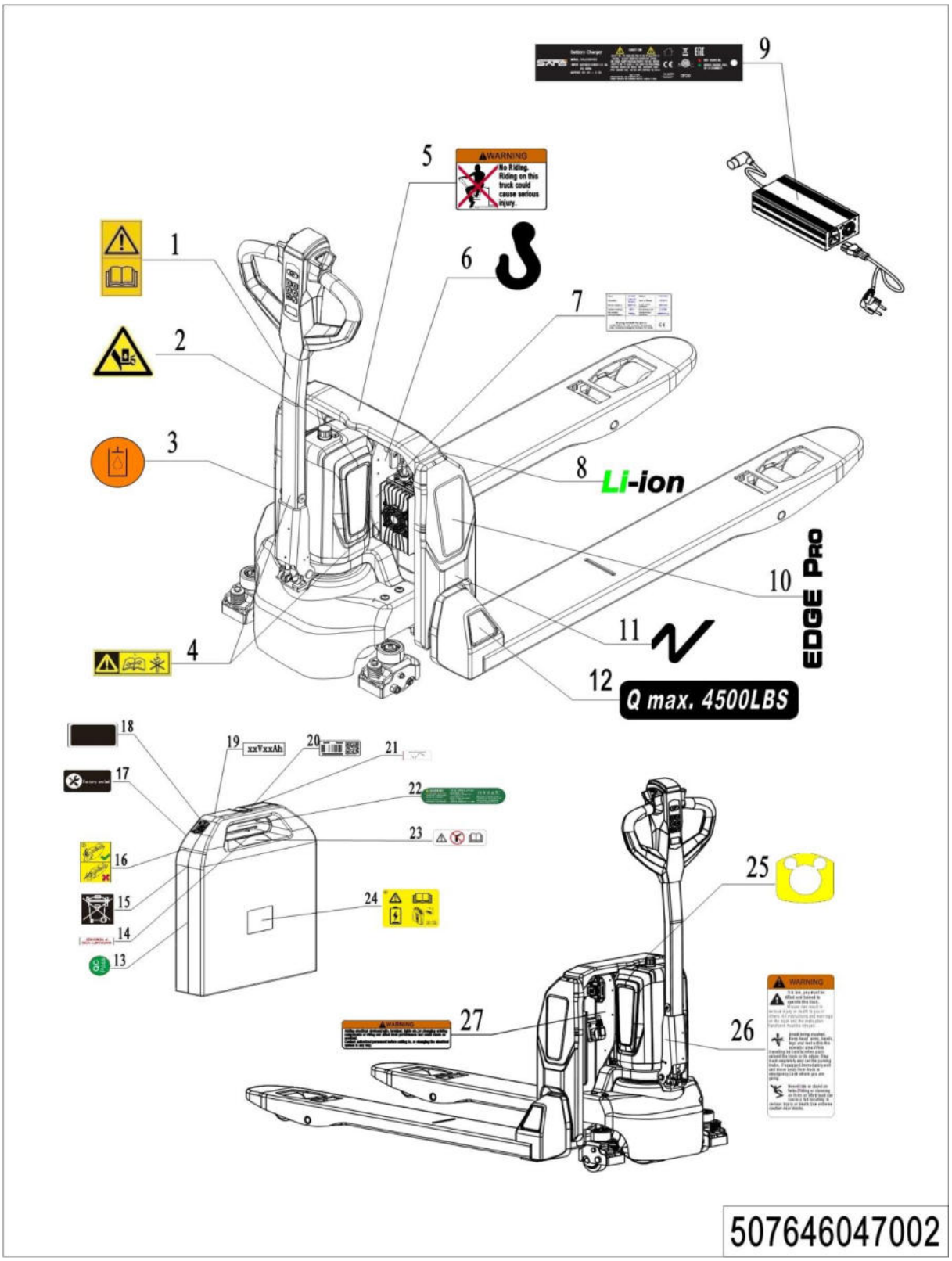

04 Labels and Decals-EU(PTE20N Pro)(507646047002)

No.	Item Code	Mark	Item Description	Qty.	Substitute	Note
1	941200300002		Label	1		
2	508047020007		Label	1		
3	941200300003		Label	1		
4	508047020004		Label	2		
5	941200100011		Label	1		
6	941200300001		Label	2		
7	507647520000		Identification Plate	1		540x1150-48v20Ah
7	507647520001		Identification Plate	1		685x1150-48v20Ah
8	507798520028		Label	1		
9	508047520005		Label	1		
10	507747020005		Label	1		
11	510847020003		Label	2		
12	941200200050		Label	2		
13	510847020015		Label	1		
14	510817020014		Label	1		
15	508047020015		Label	1		
16	507798520030		Label	1		
17	507798520031		Label	1		
18	507798520032		Label	1		
19	507698520002		Label	1		48V20Ah
19	507698520003		Label	1		48V20Ah Battery heating
20	507698520004		Label	2		
21	510847020008		Label	1		
22	507698520005		Identification Plate	1		48V20Ah
22	507698520006		Identification Plate	1		48V20Ah Battery heating
23	510847020013		Label	1		
24	507798520040		Label	1		
25	508047020000		Label	1		
26	941200100009		Label	1		
27	941200100010		Label	1		

Appendix

01 Electrical Circuit Diagram(PTE15N Pro)(507746045501)

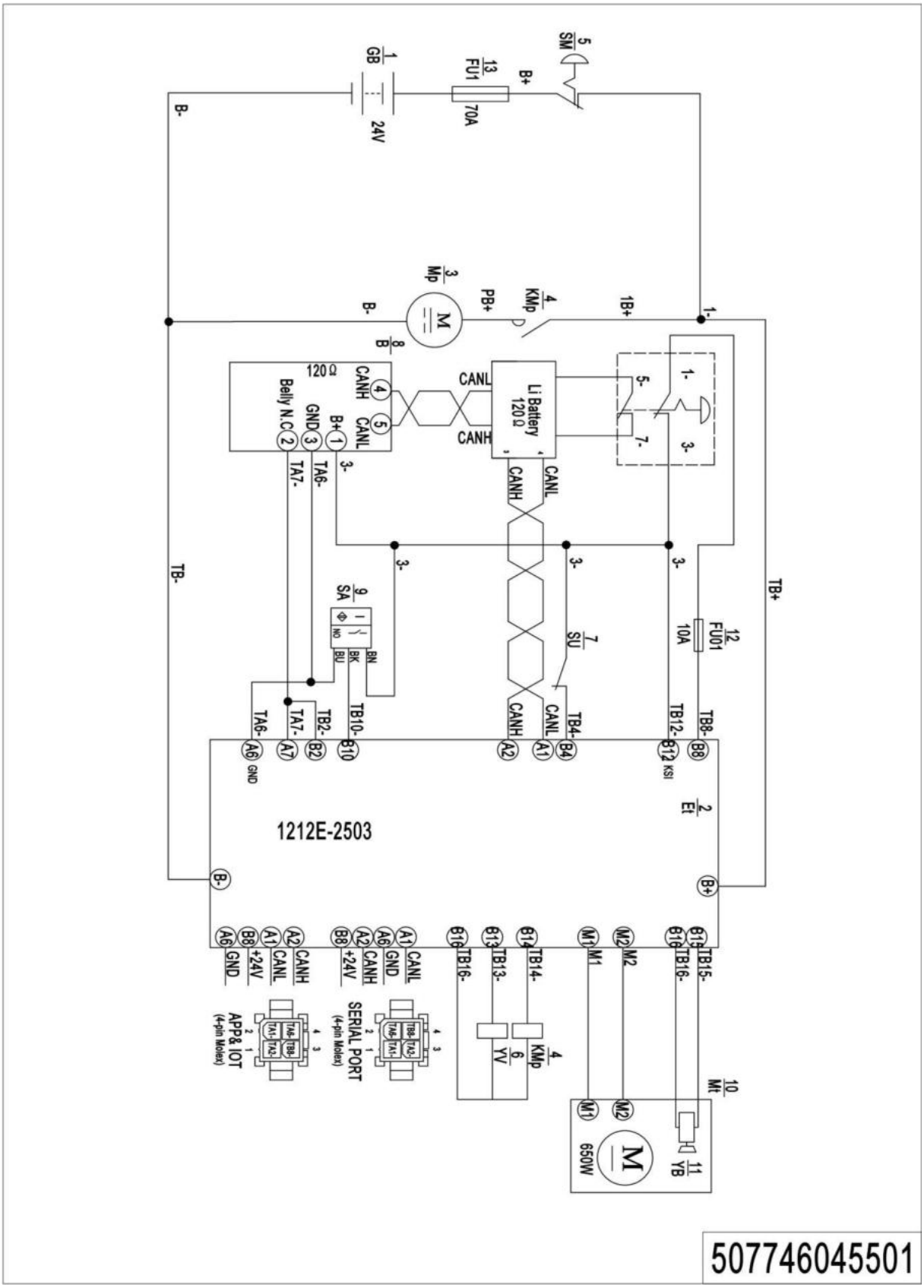

1= Supply as package. 2= Supply with constraints. 3= Phasing-out supply. 4= Supply as assembly. 5= Check other tables.

02 Electrical Circuit Diagram(PTE15N Pro)(507746045502)

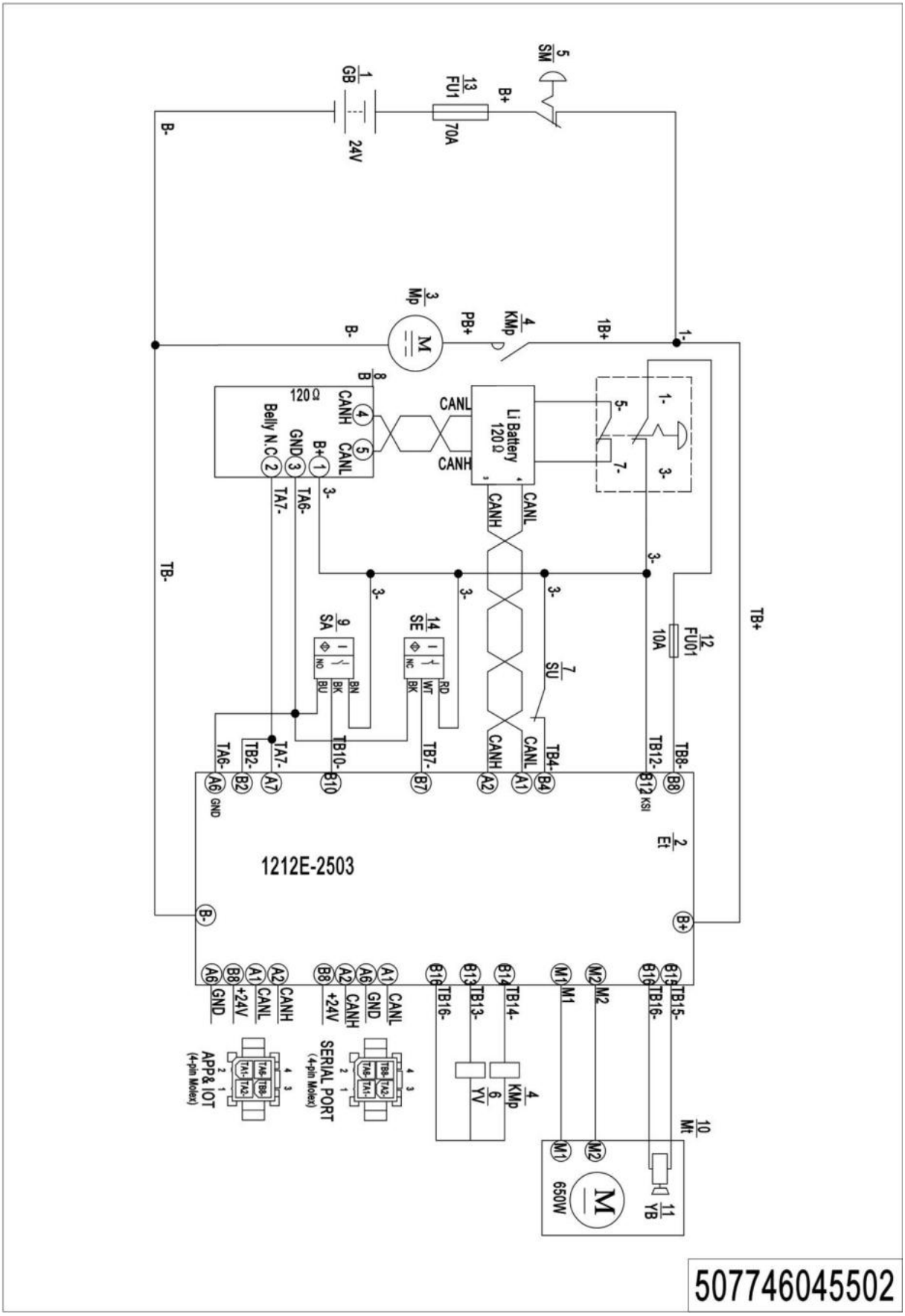

03 Electrical Circuit Diagram(PTE15N Pro)(507746045503)

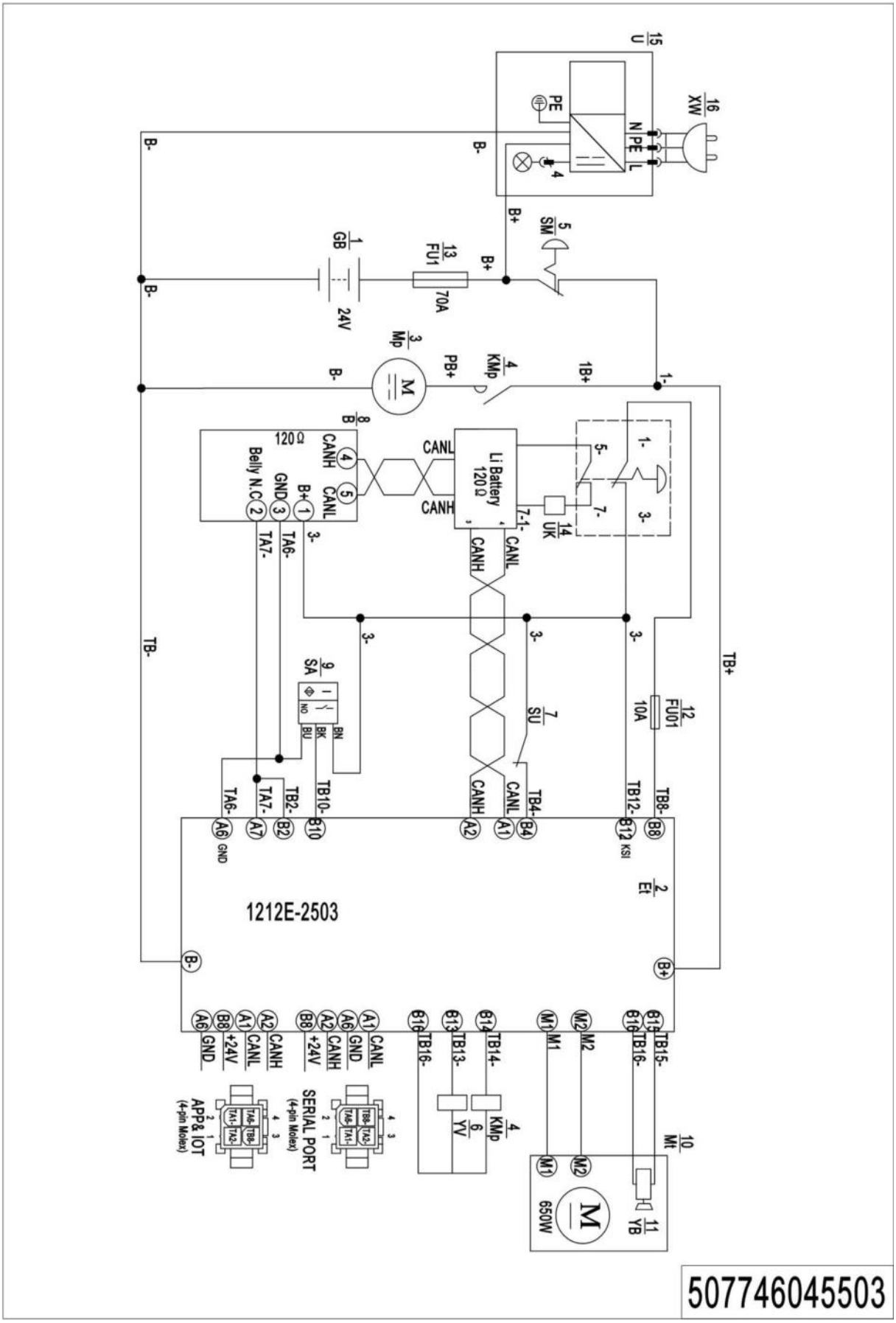

1= Supply as package. 2= Supply with constraints. 3= Phasing-out supply. 4= Supply as assembly. 5= Check other tables.

04 Electrical Circuit Diagram(PTE15N Pro)(507746045504)

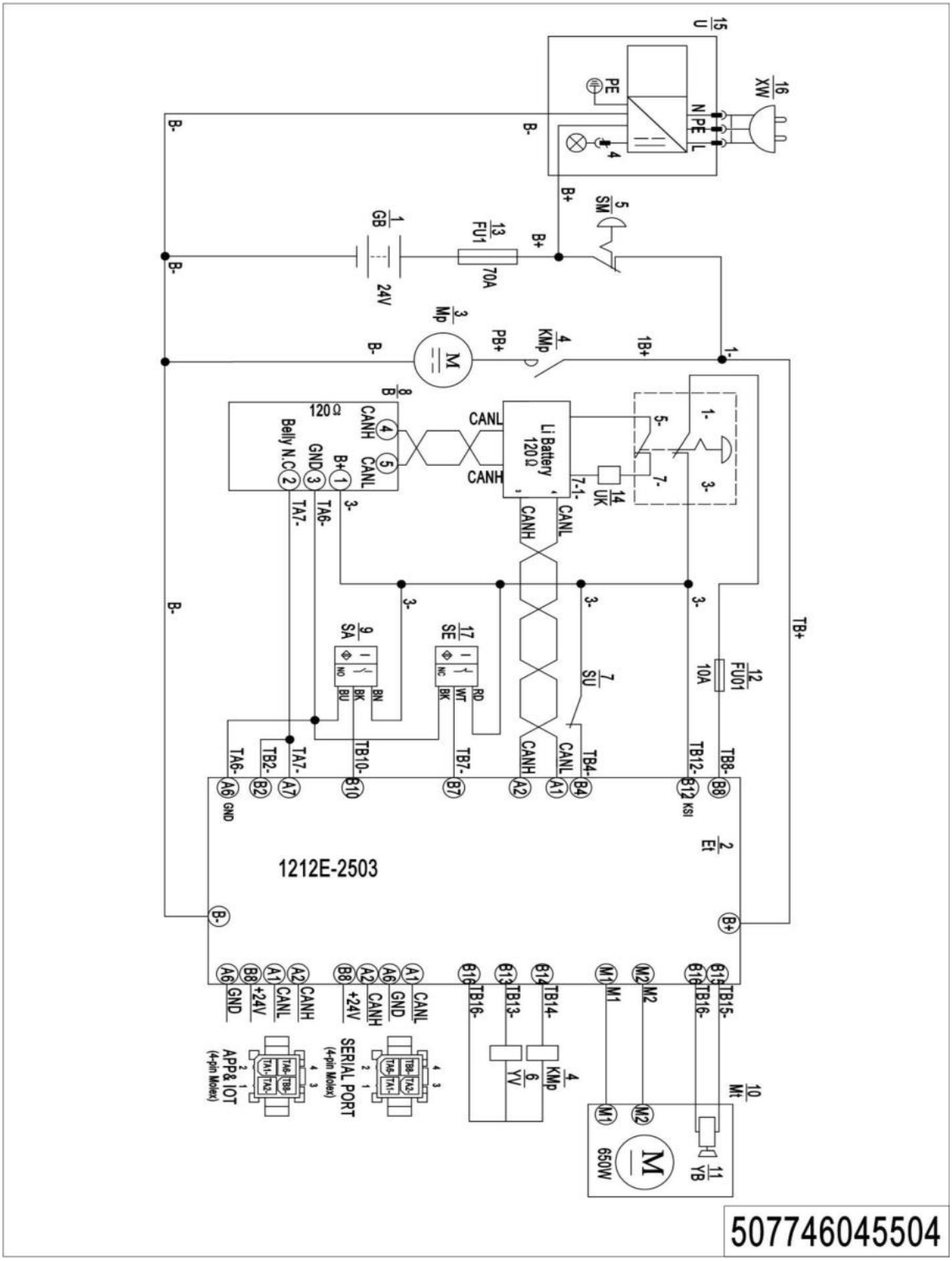

05 Electrical Circuit Diagram(PTE20N Pro)(507646045501)

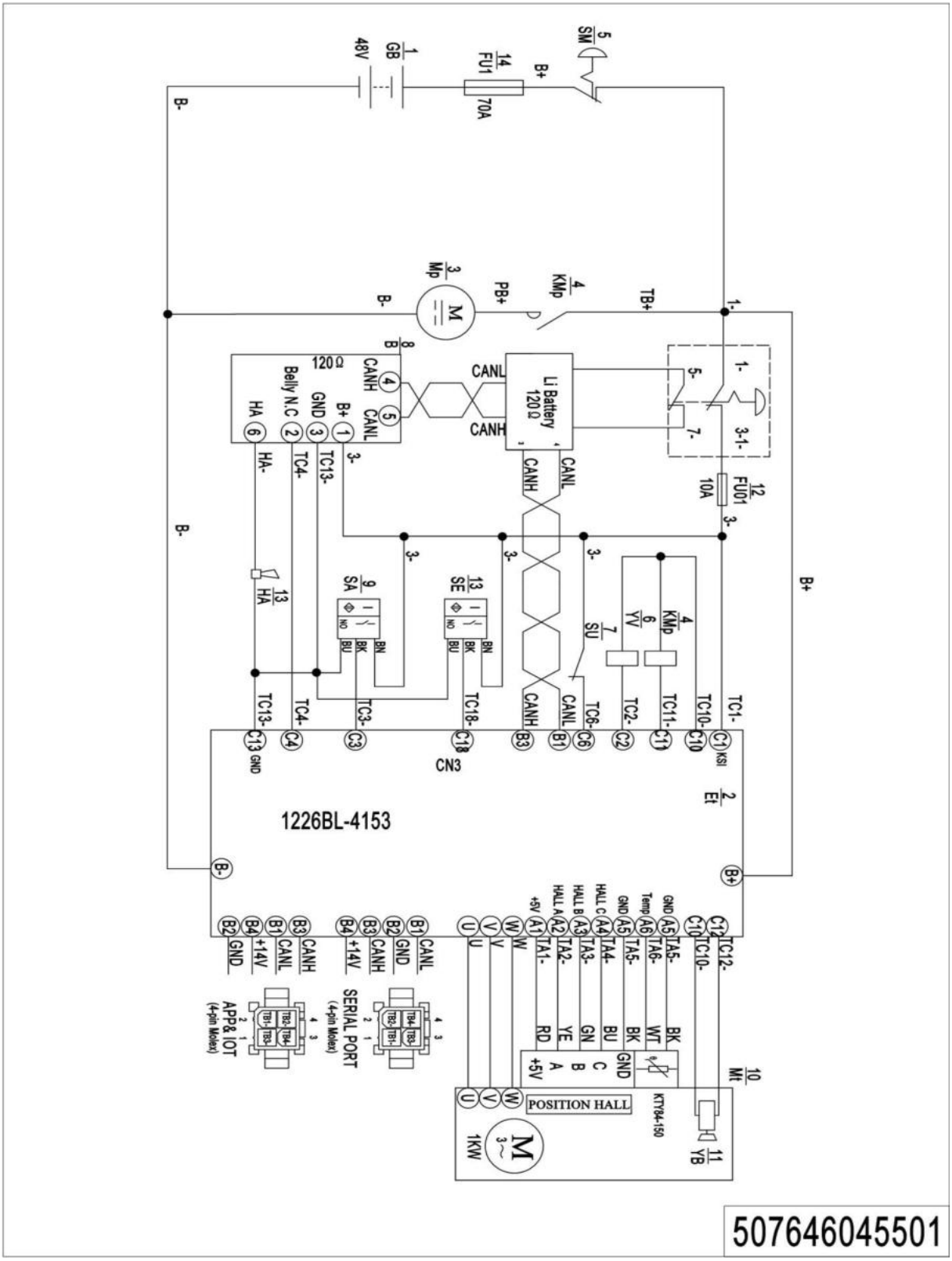

06 Electrical Circuit Diagram(PTE20N Pro)(507646045502)

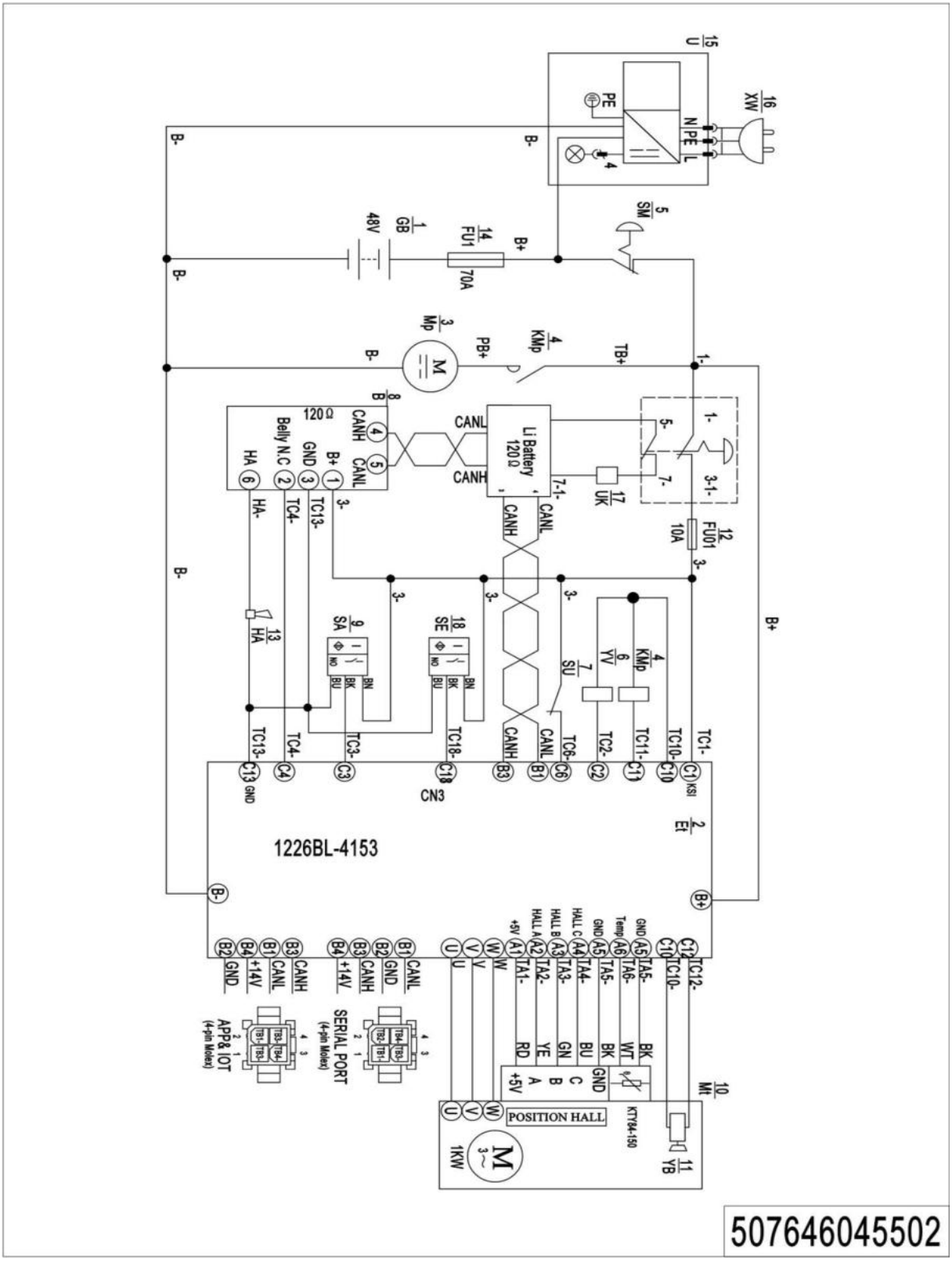

07 Hydraulic Circuit Diagram(PTE15N Pro)(507746045505)

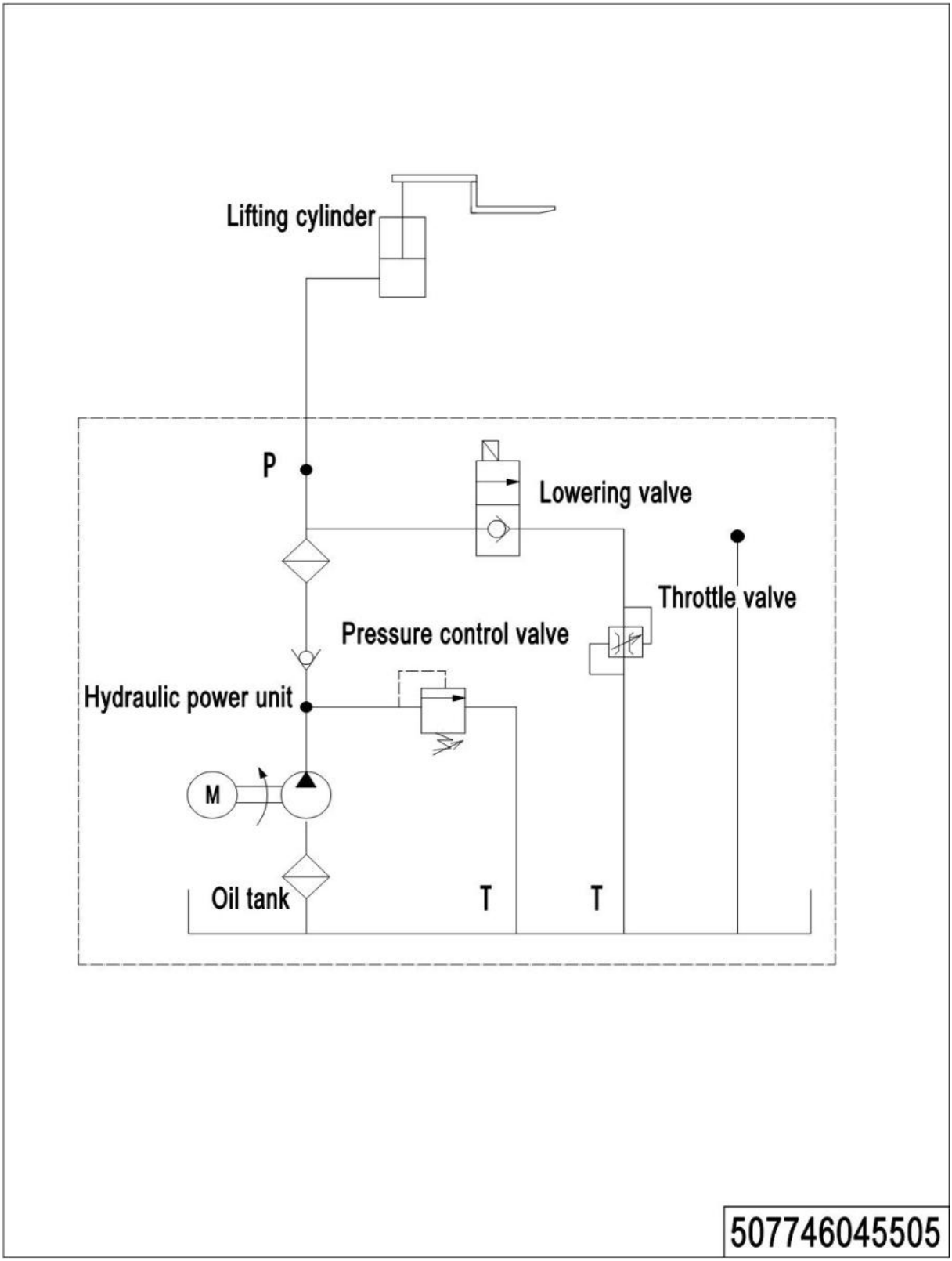

08 Hydraulic Circuit Diagram(PTE20N Pro)(507646045503)

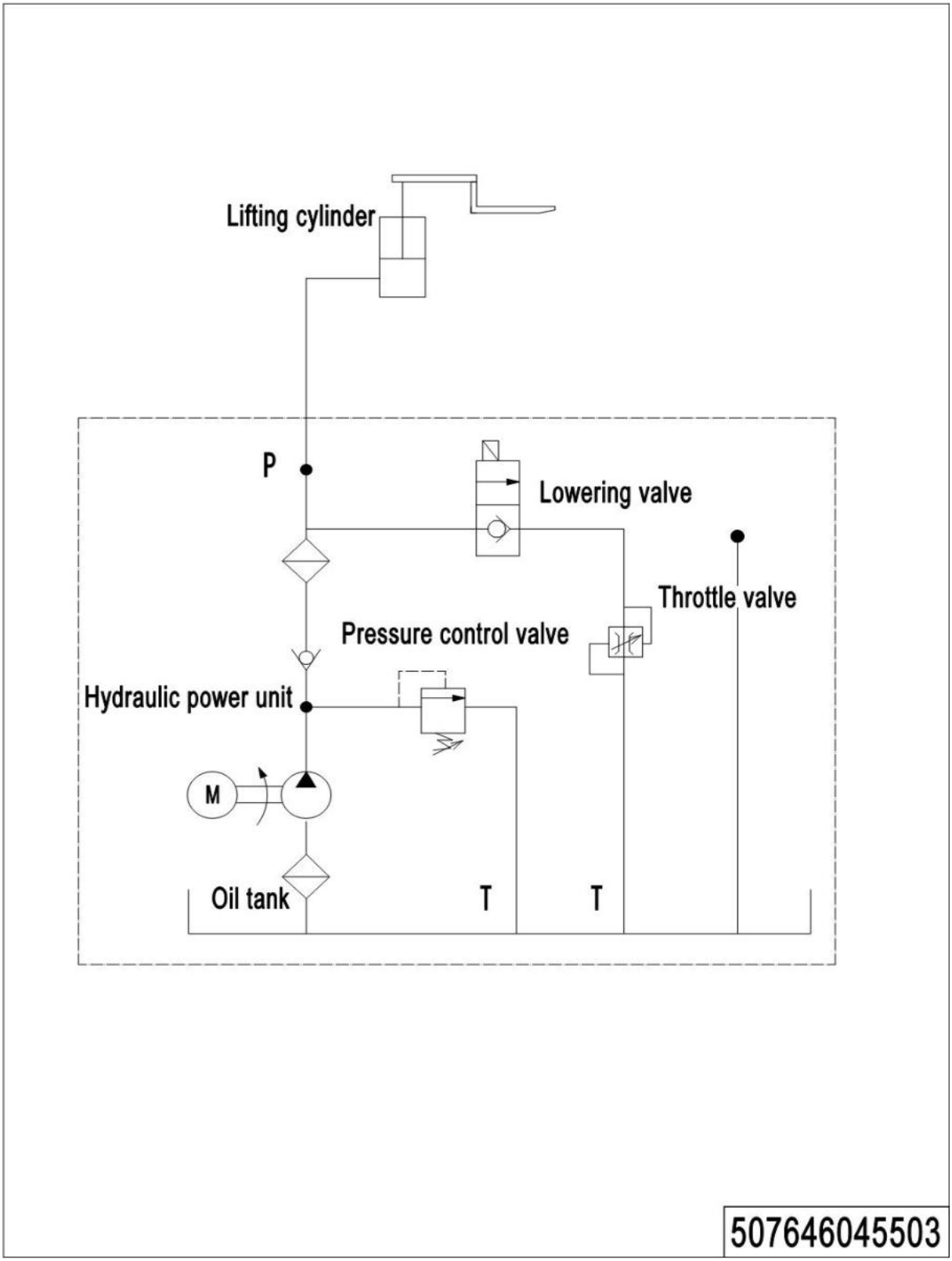

09 Consumable Parts List

No.	Item Code	Item Description	Qty.	Chapter/ Section/ Number
1	910700200058	Bearing	1	Chapter 1/01/5. Chapter 1/03/4
2	910700600044	Bearing	1	Chapter 1/01/7. Chapter 1/03/6
3	507798520021	Bearing	1	Chapter 1/02/1.02
4	507798520023	Carbon Brush	4	Chapter 1/02/1.04
5	910700200044	Bearing	1	Chapter 1/04/5
6	961004000009	Drive Wheel	1	Chapter 1/02/2. Chapter 1/04/2
7	961004200001	Drive Wheel	1	Chapter 1/02/2. Chapter 1/04/2
8	508598510002	Proximity Switch Kit	1	Chapter 1/03/13
9	508098520008	Brush	1	Chapter 2/01/4.02
10	508098510018	Seal Kit	1	Chapter 2/01/9.01
11	508598510004	Seal Kit	1	Chapter 2/01/9.03 Chapter 2/02/8.02
12	508598510005	Seal Kit	1	Chapter 2/02/8.01
13	940500100097	Bushing	2	Chapter 3/01/24 Chapter 3/02/24
14	910201000005	Screw M6x8	2	Chapter 3/01/30.2
15	940500100083	Bushing	8	Chapter 3/01/26 Chapter 3/02/27
16	911200100001	Oil Cup	2	Chapter 3/01/30.07
17	508033010040	Wire Harness	1	Chapter 4/01/4
18	508598510005	Seal Kit	1	Chapter 4/02/4
19	940500200001	Bushing	2	Chapter 4/01/6 Chapter 4/02/6
20	920200400026	Proximity Switch	1	Chapter 4/01/9 Chapter 4/02/9
21	508011010001	Gas Spring	1	Chapter 4/01/10.3 Chapter 4/02/10.3
22	505638520039	Running Pulley	2	Chapter 4/05/1.02 Chapter 4/06/1.02
23	508098510049	Wheel Kits	2	Chapter 4/05/2 Chapter 4/06/2
24	940500200038	Bushing	4	Chapter 4/05/2.01 Chapter 4/06/2.01
25	910700200019	Bearing	8/4	Chapter 4/05/2.04 Chapter 4/06/2.04
26	940300300005	WheelΦ80x70	4	Chapter 4/06/2.05
27	940300300047	WheelΦ80x70	4	Chapter 4/05/2.05
28	940300300023	WheelΦ80x93	4	Chapter 4/05/3.01 Chapter 4/06/3.01
29	940500100083	Bushing	4	Chapter 4/06/2.09
30	508098510050	Wheel Kits	2	Chapter 4/06/3
31	910700200018	Bearing	2	Chapter 4/07/6.1

1= Supply as package. 2= Supply with constraints. 3= Phasing-out supply. 4= Supply as assembly. 5= Check other tables.

09 Consumable Parts List(Continuation)

No.	Item Code	Item Description	Qty.	Chapter/ Section/ Number
32	940300300017	WheelΦ80x30	1	Chapter 4/07/6.2
33	508098510047	Spring Kit	2	Chapter 4/07/7
34	508033010040	Wire Harness	1	Chapter 5/01/1
35	508033010034	Wire Harness	1	Chapter 5/01/2
36	507733010002	Wire Harness	1	Chapter 5/01/3
37	507733010003	Wire Harness	1	Chapter 5/01/3
38	507733010000	Wire Harness	1	Chapter 5/01/4
39	507733010001	Wire Harness	1	Chapter 5/01/4
40	507733010004	Wire Harness	1	Chapter 5/01/4
41	507733010005	Wire Harness	1	Chapter 5/01/4
42	508033010036	Cables	1	Chapter 5/01/5
43	508033010033	Cables	1	Chapter 5/01/6
44	508033010006	Wire Harness	1	Chapter 5/01/7
45	508033010032	Wire Harness	1	Chapter 5/01/7
46	508033010035	Cables	1	Chapter 5/01/8
47	507633010005	Wire Harness	1	Chapter 5/02/1
48	508533010006	Wire Harness	1	Chapter 5/02/2
49	508533010014	Cables	1	Chapter 5/02/3
50	508533010004	Wire Harness	1	Chapter 5/02/4
51	508533010005	Wire Harness	1	Chapter 5/02/5
52	507633010002	Wire Harness	1	Chapter 5/02/6
53	507633010003	Wire Harness	1	Chapter 5/02/6
54	508533010007	Wire Harness	1	Chapter 5/02/7
55	507633010001	Wire Harness	1	Chapter 5/02/8
56	507633010004	Wire Harness	1	Chapter 5/02/8
57	920200100027	Emergency Button	1	Chapter 5/03/2 Chapter 5/04/2
58	920200300022	Microswitch	1	Chapter 5/03/8 Chapter 5/04/8
59	920100200015	Fuse	1	Chapter 5/09/1.11 Chapter 5/10/1.11
60	920100200016	Fuse	1	Chapter 5/09/1.10 Chapter 5/10/1.11
61	920100200018	Fuse	1	Chapter 5/11/1.11
62	920100200017	Fuse	1	Chapter 5/11/1.10

1= Supply as package. 2= Supply with constraints. 3= Phasing-out supply. 4= Supply as assembly. 5= Check other tables.

1= Supply as package. 2= Supply with constraints. 3= Phasing-out supply. 4= Supply as assembly. 5= Check other tables.