INSTRUCTION HANDBOOK

Electric Pallet Truck

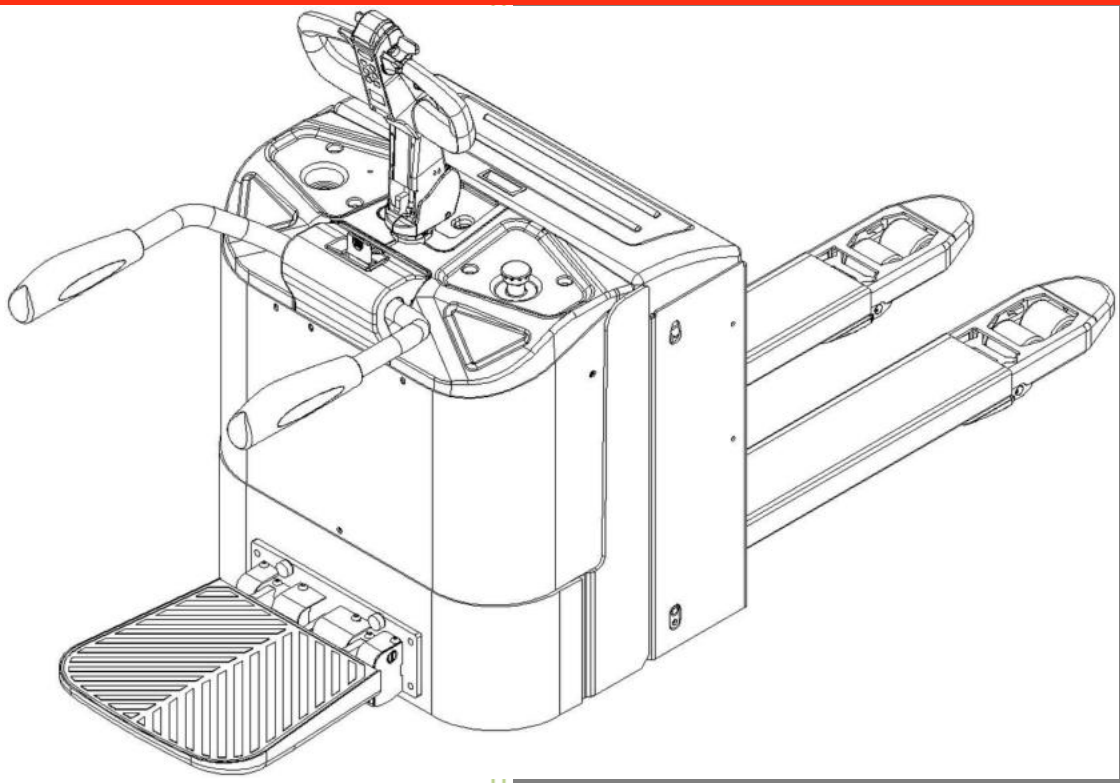

WARNING

Do not use the pallet truck before reading and understanding these operating instructions.

NOTE:

- **Please check the designation of your present type at the last page of this document as well as on the ID-plate.**
- **Keep for future reference.**

Version 03/2020

PTE 20-C-SMS-001-EN

FOREWORD

Before operating the truck, read this ORIGINAL INSTRUCTION HANDBOOK carefully and understand the usage of the truck completely. Improper operation could create danger.
This handbook describes the usage of different electric pallet trucks. When operating and servicing the truck, make sure, that it applies to your type.

Chapter 11 describes specialized stipulations and regulations for the American market. Follow these instructions and stipulations if you operate the truck within the American market!

Keep this handbook for future reference. If this or the warning/ caution labels are damaged or got lost, please contact your local dealer for replacement.
This truck complies with the requirements according to EN ISO 3691-1(Industrial trucks- safety requirements and verification, part 1; part 5), EN 12895 (Industrial trucks- electromagnetic compatibility), EN 12053 (Safety of industrial trucks- test methods for measuring noise emissions), EN 1175-1 (Industrial truck safety – electrical requirements), assumed the truck is used according to the described purpose.
The noise level for this machine is 69 dB(A) according to EN 12053.
The vibration is 0,85 m/s2 (if equipped with a platform) according to EN 13059.

ATTENTION:

- Environmentally hazardous waste, such as batteries, oil and electronics, will have a negative effect on the environment, or health, if handled incorrectly.

- The waste packages should be sorted and put into solid dustbins according to the materials and be collected disposal by local special environment protection bureau. To avoid pollution, it's forbidden to throw away the wastes randomly.

- To avoid leaking during the use of the products, the user should prepare some absorbable materials (scraps of wooden or dry duster cloth) to absorb the leaking oil in time. To avoid second pollution to the environment, the used absorbable materials should be handed in to special departments in terms of local authorities.

- Our products are subject to ongoing developments. Because this handbook is only for the purpose of operating /servicing the pallet truck, therefore please have understanding, that there is no guarantee out of particular features out of this handbook.

NOTE: On this manual, the left sign means warning and danger, which can lead to death or serious injury if not followed.

Copyright

The copyright remains with the company, mentioned on the CE- certificate at the end of this document or, if sold within the USA, with the company, mentioned on the company sticker.

TABLE OF CONTENTS

1. CORRECT APPLICATION 3
2. DESCRIPTION OF THE PALLET TRUCK 4
   a. Overview of the main components 4
   b. Main technical data 8
   c. Description of the safety devices and warning labels (Europe and other, excepting USA) 10
   d. Identification plate 10
3. WARNINGS, RESIDUAL RISK AND SAFETY INSTRUCTIONS 11
4. COMMISSIONING, TRANSPORTING, DECOMMISSIONING 11
   a. Commissioning 11
   b. Lifting/ transportation 12
   c. Decommissioning 12
5. DAILY INSPECTION 13
6. OPERATING INSTRUCTIONS 13
   a. Parking 13
   b. Lifting 13
   c. Lowering 14
   d. Travelling 14
   e. Steering 14
   f. Braking 15
   g. Malfunctions 15
   h. Emergency 15
7. BATTERY CHARGING AND REPLACEMENT 15
   a. Replacement 16
   b. Battery indicator ..... 错误！未定义书签。
   c. Charging 18
8. REGULAR MAINTENANCE 18
   a. Maintenance checklist 19
   b. Lubricating points 20
   c. Check and refill hydraulic oil 20
   d. Checking electrical fuses 21
9. TROUBLE SHOOTING 21
10. WIRING/ CIRCUIT DIAGRAM 23
   a. Electrical circuit diagram 23
   b. Hydraulic circuit 25
11. SPECIALIZED STIPULATIONS FOR THE US- AMERICAN MARKET 26
   a. Foreword/ Compliance 26
   b. Description warning labels (only US-market) 27
   c. Technical data for US market 29
12. DECLARATION OF CONFORMITY(valid, if sold within the EU) 30

1. CORRECT APPLICATION

It is only allowed to use this electric pallet truck according to this instruction handbook.

The trucks described in this handbook are self propelled electric power pallet trucks, with electrically powered low height lifting function. The trucks are designed to lift, lower and transport palletized loads.

A wrong usage can cause human injuries or can damage equipment.
The operator/ the operating company has to ensure the correct usage and has to ensure, that this pallet truck is used only by staff, which is trained and authorized to use this truck.

The pallet truck has to be used on substantially firm, smooth, prepared, level and adequate surfaces. The truck is intended to be used for indoor applications with ambient temperatures between +5°C and + 40°C and for various transportation applications without crossing permanent obstacles or potholes. Operating on ramps is not allowed. While operating, the load must be placed approximately on the longitudinal centre plane of the truck.
Lifting or transporting people is forbidden.

If used on tail lifts or loading ramps, please ensure that these are used correctly according to the operating instructions.

The capacity is marked on capacity sticker as well on the Identification plate. The operator has to consider the warnings and safety instructions.
Operating lighting must be minimum 50 Lux.

<u>Modification</u>
No modifications or alterations to this pallet truck which may affect, for example, capacity, stability or safety requirements of the truck, shall be made without the prior written approval of the original truck manufacturer, its authorized representative, or a successor thereof. This includes changes affecting, for example braking, steering, visibility and the addition of removable attachments. When the manufacturer or its successor approve a modification or alteration, they shall also make and approve appropriate changes to capacity plate, decals, tags and operation and maintenance handbooks.

By not observing these instructions, the warranty becomes void.

2. DESCRIPTION OF THE PALLET TRUCK

a. Overview of the main components

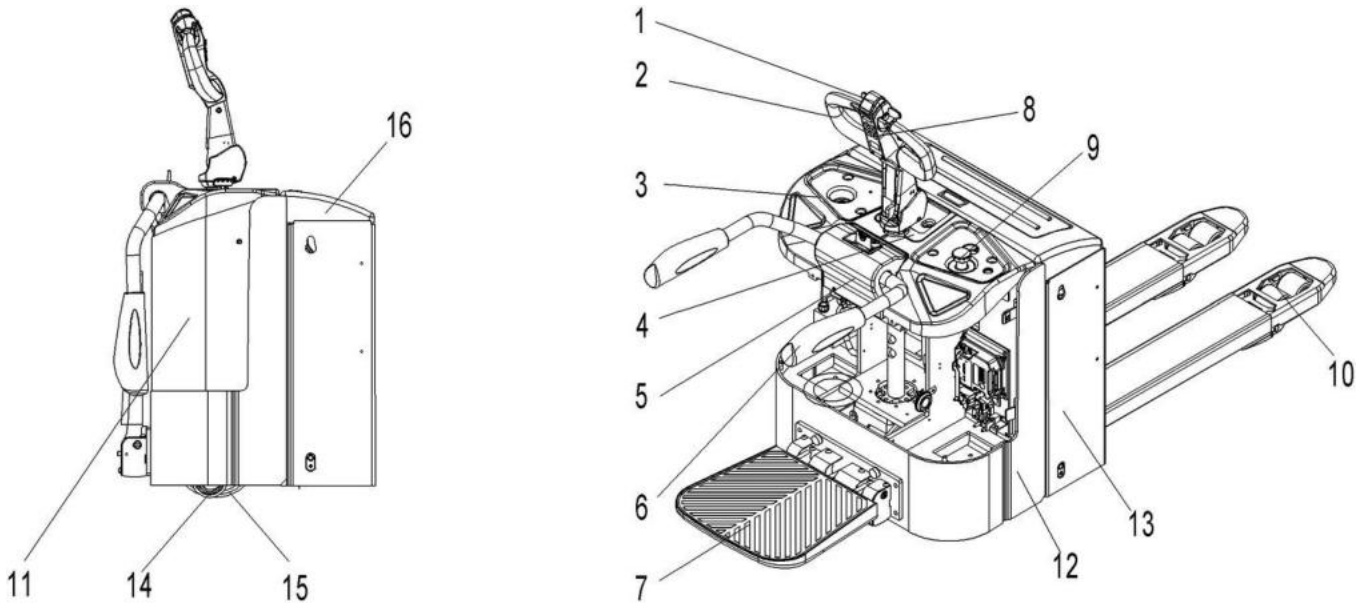

Fig. 1: Overview main components

1. Safety (belly) button
2. Tiller(Optional Combination Lock/Key Switch)
3. Upper cover
4. Middle cover
5. Protective arms (optional)
6. Protective arm cover/ cover
7. Foldable platform (optional)
8. Combination lock
9. Emergency button
10. Load wheels
11. Main cover
12. Drive chassis
13. Fork chassis
14. Drive wheel
15. Castors
16. Battery cover

b. Main technical data

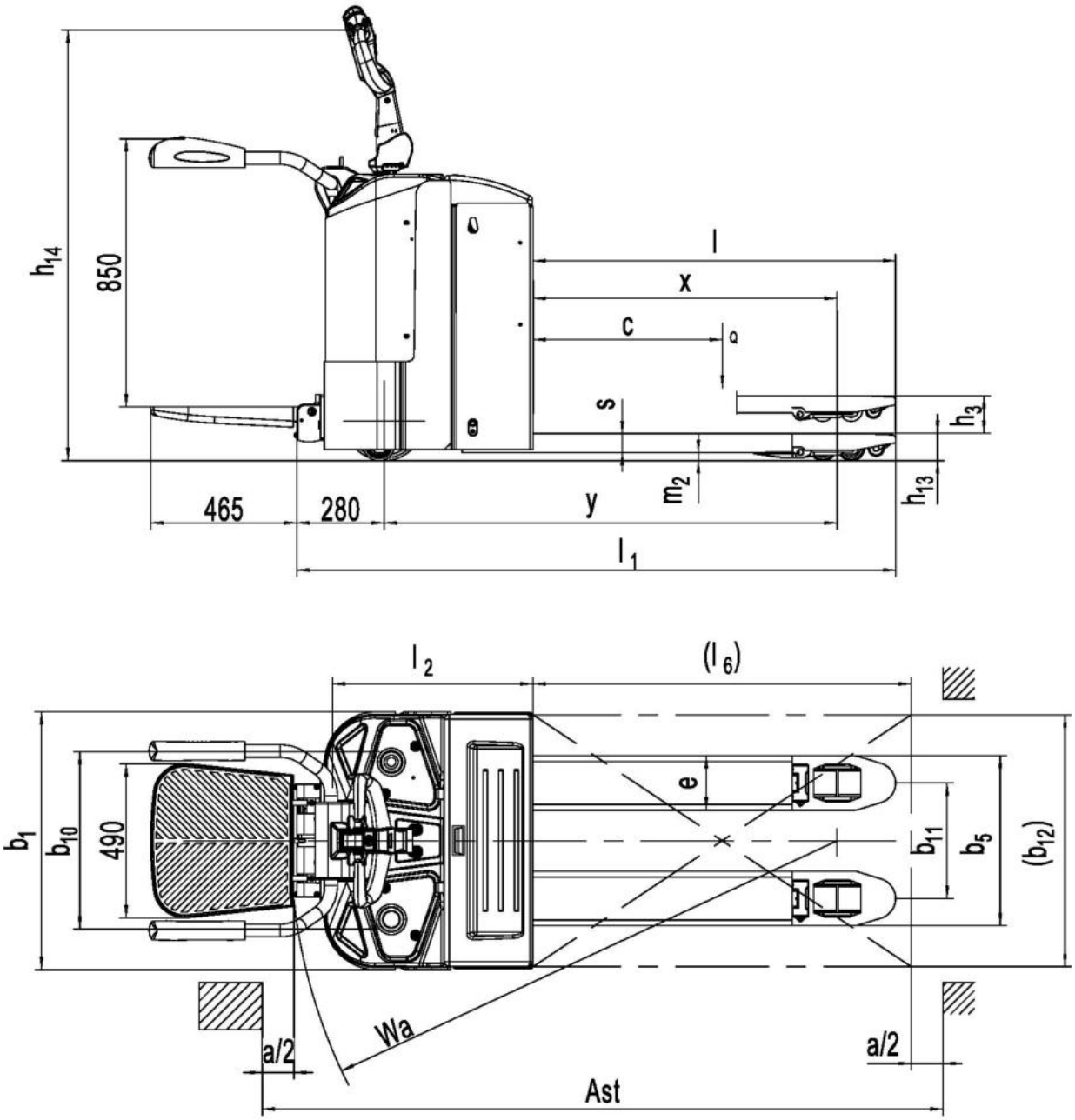

Table 1: Main technical data for standard version

Type sheet for industrial truck acc. to VDI 2198				
Distinguishing mark	1.2	Manufacturer`s type designation		PTE 20-C
	1.3	Power(battery, diesel, petrol, gas, manual)		Battery
	1.4	Operator type		Pedestrian (Stand)
	1.5	Load Capacity / rated load	Q (t)	2.0
	1.6	Load centre distance	c (mm)	600
	1.8	Load distance, centre of drive axle to fork	x (mm)	892
	1.9	Wheelbase	y (mm)	1375
Weight	2.1	Service weight	kg	650
	2.2	Axle loading, laden front/rear	kg	1010/1640
	2.3	Axle loading, unladen front/rear	kg	520/130
Tires, chassis	3.1	Tires		Polyurethane (PU)
	3.2	Tire size,front	∅xw(mm)	230X70
	3.3	Tire size,rear	∅xw(mm)	82X110/84X84
	3.4	Additional wheels(dimensions)	∅xw(mm)	100x40
	3.5	Wheels, number front/ rear(x=driven wheels)		1×+2/4
	3.6	Tread, front	b_{10} (mm)	560
	3.7	Tread, rear	b_{11} (mm)	367/512
Dimensions	4.4	Lift	h_3 (mm)	120
	4.9	Height of tiller in drive position min./ max.	h_{14} (mm)	900/1395
	4.15	Height, lowered	h_{13} (mm)	85
	4.19	Overall length	l_1 (mm)	1900
	4.20	Length to face of forks	l_2 (mm)	750
	4.21	Overall width	b_1 (mm)	820
	4.22	Fork dimensions	s/e/l (mm)	60/173/1150
	4.25	Distance between fork-arms	b_5 (mm)	540/685
	4.32	Ground clearance, centre of wheelbase	m_2 (mm)	25
	4.34	Aisle width for pallets 800X1200 lengthways	Ast (mm)	2110
	4.35	Turning radius	Wa (mm)	1740
Performance data	5.1	Travel speed, laden/ unladen	km/h	5.5/6.0
	5.2	Lift speed, laden/ unladen	m/s	0.025/0.030
	5.3	Lowering speed, laden/ unladen	m/s	0.030/0.025
	5.8	Max. gradeability, laden/ unladen	%	8/15
	5.10	Service brake		Electromagnetic
Electric-motor	6.1	Drive motor rating	kW	1.3
	6.2	Lift motor rating at S3 15%	kW	0.8
	6.3	Battery acc. to DIN 43531/ 35/ 36 A, B, C, no		B, 2PzS
	6.4	Battery voltage, nominal capacity K5	V/ Ah	24/160
	6.5	Battery weight	kg	155
	6.6	Energy consumption acc. to VDI cycle	kWh/h	0.32
Additional data	8.1	Type of drive control		AC- speed control
	8.4	Sound level at driver`s ear acc. to EN 12053	dB(A)	69

c. Description of the safety devices and warning labels (Europe and other, excepting USA)

For the USA –market, the description of the safety and warning labels is mentioned in chapter 11.

A Sticker to read and follow this instruction
B "No passengers" decal
C Capacity sticker
D Crane hook label
E Identification plate (ID-plate)
F Sign oil filling point

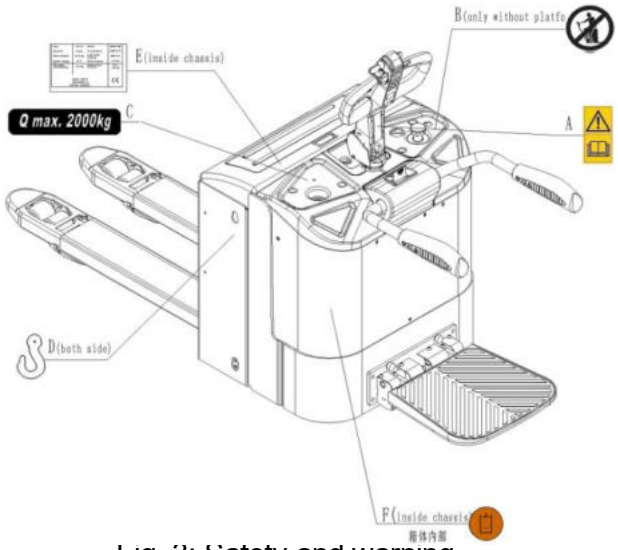

Fig. 3: Safety and warning

The truck is equipped with an emergency switch (8) which stops all lifting-, lowering-, driving- functions and engages the failsafe electromagnetic brake when it is pushed.
The truck is equipped with a safety (belly) button (1) which switches the driving function away from the operator, if the truck travels towards the operator and the tiller is activated in the tillers operating zone. Follow also the instructions given on the decals. Replace the decals if they are damaged or missing.

d. Identification plate

1 Designation, type
2 Serial number
3 Rated capacity in kg
4 Supply voltage in V
5 Own mass (self weight) in kg without battery
6 Name and address of manufacturer)
7 Battery weight minimum/ maximum
8 Nominal power in kW
9 Load center distance
10 Manufacturing date
11 Option

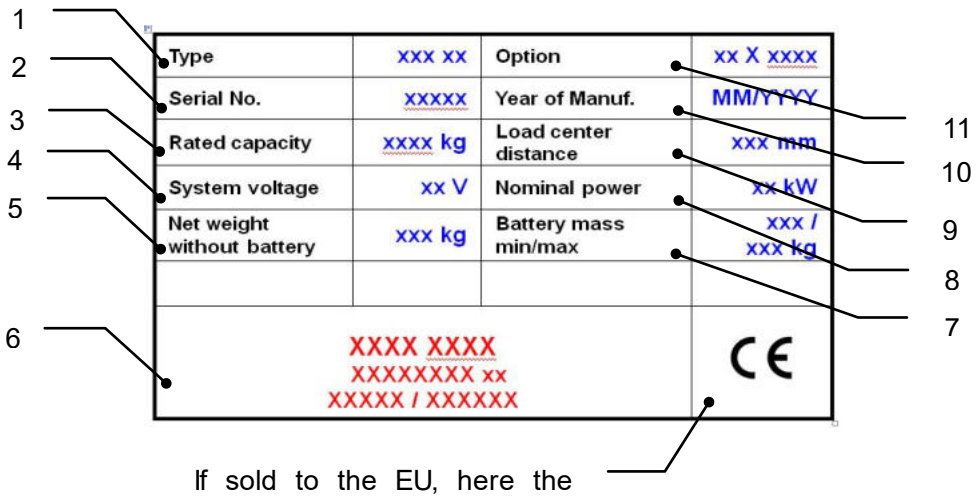

If sold to the EU, here the place of the CE marking CE

Fig. 4: Identification plate

3. WARNINGS, RESIDUAL RISK AND SAFETY INSTRUCTIONS

DO NOT

- Put foot or hand under or into the lifting mechanism.
- Allow other person than the operator to stand in front of or behind the truck when it is moving or lifting/lowering.
- Overload the truck.
- Put foot in front of the wheels, injury could result.
- Lift people. People could fall down and suffer severe injury.
- Push or pull loads
- Use this truck on ramps
- Side or end load. Load must be distributed evenly on the forks.
- Use the truck with unstable, unbalanced not stable load.
- Use truck without manufacturer's written consent.
- Lifted loads could become unstable at wind forces. In the case of wind forces do not lift the load if there is any influence to the stability

Watch difference in floor levels when driving. Load could fall down or the truck could get uncontrollable.
Keep watching the condition of load. Stop operating the truck if load becomes unstable.
Brake the truck and activate the emergency button (8) by pushing when sliding load on or off the truck. If the truck has any malfunctions, follow chapter 6.
Practice maintenance work according to regular inspection. This truck is not designed to be water resistant. Use the truck under dry condition. Prolonged continuous operation might cause damage of the power pack. Stop operation if temperature of hydraulic oil is too high.

- When operating the electric pallet truck, the operator has to wear safety shoes.
- The truck is intended to be used for indoor applications with ambient temperatures between +5°C and + 40°C.
- The operating lighting must be minimum 50 Lux.
- It is not allowed to use the truck on ramps.
- To prevent unintended sudden movements when not operating the tuck (i.e. from another person, etc.) switch of f the truck when not operating it.

4. COMMISSIONING, TRANSPORTING, DECOMMISSIONING

a. Commissioning

Table 2: Commissioning data

Type	PTE 20-C
Commissioning weight [kg]	670 kg
Dimensions [mm]	1900x520x1400

After receiving our new pallet truck or for re-commissioning you have to do following before (firstly) operating the truck:

- Check if are all parts included and not damaged
- Eventually installation of the multifunction tiller
- Eventually installation and charging the batteries (follow chapter 7)
- Do the work according to the daily inspections as well as functional checks.

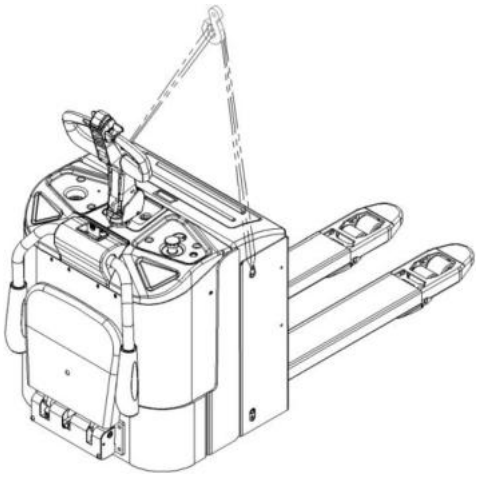

Fig. 5: Lifting with a crane

b. Lifting/ transportation

For transporting, remove the load, unplug the battery connector lower the forks to the lowest position and fix the truck safe with dedicated lifting gear according to the following figures.

Lifting

⚠ USE DEDICATED CRANE AND LIFTING EQUIPMENT
DO NOT STAND UNDER THE SWAYING LOAD
DO NOT WALK INTO THE HAZARDOUS AREA DURING LIFTING

Park the truck securely and lash the truck according to the points identified in fig. 5
Lift the truck to its destination and place the truck securely before removing the lifting gear.
The lashing points are according to the fig. 5.
.

Transportation

⚠ DURING TRANSPORTATION ON A LORRY OR TRUCK ALWAYS FASTEN THE TRUCK SECURELY

Lower the forks and park the truck securely.
Fasten the truck according to fig. 6 by fixing dedicated lashing belts to each side of the trucks crane hook holes and fasten the other side at the transporting truck.

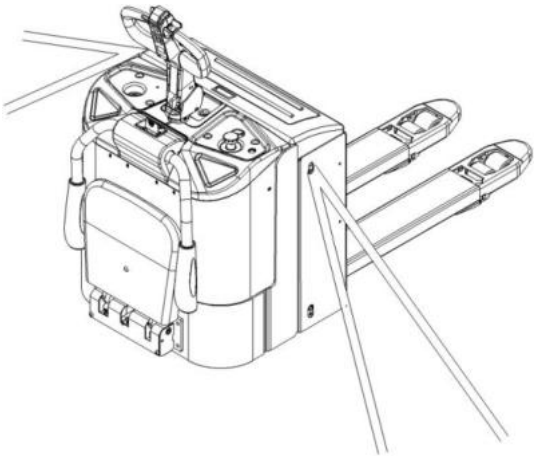

Fig. 6: fixing points

c. Decommissioning

For storage, remove the load, lower the truck to the lowest position, grease all in this handbook mentioned greasing points (regular inspection), eventually protect the truck against corrosion and dust. Remove the batteries and jack the truck safely, so that there will be no flattening after storage.
For final decommissioning hand the truck to a designated

recycling company. Oil, batteries and electric components must be recycled due to legal regulations.

5. DAILY INSPECTION

This chapter describes pre-shift checks before putting the truck into operation.
Daily inspection is effective to find the malfunction or fault on this truck. Check the truck on the following points before operation.
Remove load from truck and lower the forks.

DO NOT USE THE TRUCK IF ANY MALFUNCTION IS FOUND.

- Check for scratches, deformation or cracks.
- Check if there is any oil leakage from the cylinder.
- Check the vertical creep of the truck.
- Check the smooth movement of the wheels.
- Check the function of the emergency brake by activating the emergency button.
- Check, the tiller arm- switch braking function
- Check the lifting and lowering functions by operating the buttons.
- Check if all bolts and nuts are tightened firmly.
- Visual check if there are any broken hoses or broken electric wires.

6. OPERATING INSTRUCTIONS

BEFORE OPERATING THIS TRUCK, PLEASE FOLLOW THE WARNINGS AND SAFETY INSTRUCTIONS (CHAPTER 3).

Make sure, that the load is palletized and stable and that the daily inspection is carried out.
Insert the key switch(10), turn on it. Press the horn button (19) to activate the audible warning signal.

a. Parking

DO NOT PARK THE TRUCK ON INCLINED SURFACES

The truck is equipped with an electromagnetic failsafe stopping and parking brake.
Always lower the forks fully. Press the emergency switch (8),

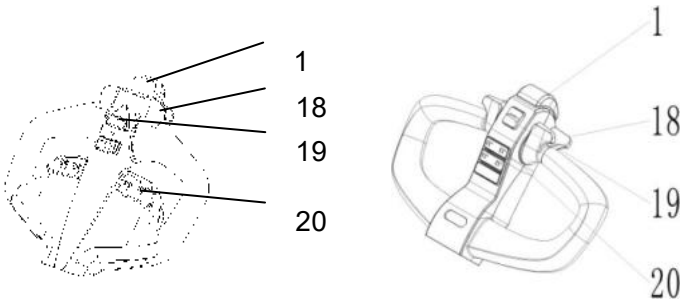

Fig.7: Tiller operating controls

b. Lifting

DO NOT OVERLOAD THE TRUCK! THE MAXIMUM CAPACITY IS 2000 kg

Travel with the lowered forks fully underneath the pallet until the load and press the lifting button (20) until you reached the desired lifting height.

c. Lowering

Press the lowering button (20) carefully.
Lower the load until the forks are clear of the pallet, then drive the truck carefully out of the load unit.

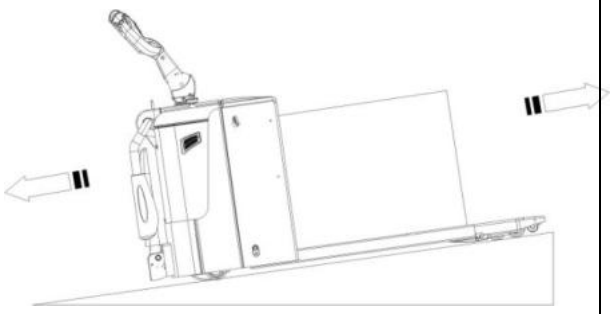

Fig. 8: Load facing uphill

d. Travelling

TRAVEL ON INCLINES ONLY WITH THE LOAD FACING UPHILL.
DO NOT TRAVEL ON INCLINES MORE THAN SPECIFIED WITH THE TECHNICAL DATA.

After starting the truck by turning on the key switch (10), move the tiller to the operating zone (‘F’, fig.9).
Turn the accelerator button to the desired direction forward ‘Fw.’ or backwards Bw.’(fig. 9).

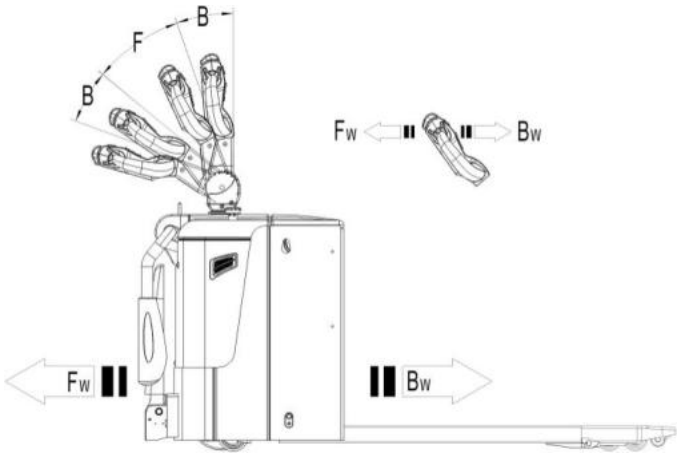

Fig. 9: Operating direction

Control the travelling speed by moving the accelerator button (18) carefully until you reached the desired speed.

If you move the accelerator button back to the neutral position, the controller decelerates the truck until the truck stops. If the truck stopped, the parking brake will be engaged.
Drive carefully the truck to the destination. Watch the route conditions and adjust the travelling speed with the accelerator- button.

e. Steering

OPTIONAL THE TRUCK CAN BE EQUIPPED WITH AN ELECTRIC STEERING SYSTEM. TAKE CARE BY OPERATING A TRUCK WITH THIS KIND OF SYSTEM; THE BEHAVIOR OF THE TRUCK MIGHT BE DIFFERENT THAN TO A TRUCK WITHOUT ELECTRIC STEERING

SYSTEM.

You steer the truck by moving the tiller to the left or right side.

f. Braking

THE BRAKING PERFORMANCE DEPENDS ON THE TRACK CONDITONS AND TRHE LOAD CONDITONS OF THE TRUCK

The braking function can be activated on several ways:

- By moving the accelerator button (18) back to the initial ‘0’ position or by releasing the button, the regenerative braking is activated. The truck brakes until it stops.
- By moving the accelerator button (18) from one driving direction directly to the opposite direction, the truck brakes regenerative until it starts travelling into the opposite direction.
- The truck brakes, if the tiller is moved up or down to the braking zones (‘B’). If the tiller is released, the tiller moves automatically up to the upper baking zone (‘B’). The truck brakes until it stops.
- The safety (belly) button (1) prevents the operator from being crushed. If this button is activated, the truck decelerates and or starts travelling into the backwards direction (‘Bw.’) for a short distance and stops. Please consider, that this button also operates, if the truck is not travelling and the tiller is in the operating zone.

g. Malfunctions

If there are any malfunctions or the truck is inoperative, please stop using the truck and activate the emergency button (8) by pushing it. If possible, park the truck on a safe area and remove the key switch (10).
Inform immediately the manager and, or call your service. If necessary, tow the truck out of the operating area by using dedicated towing/ lifting equipment.

h. Emergency

In emergencies or in the event of tip over (or off dock), keep safe distance immediately. If possible push the emergency button (8). All electrical functions will be stopped.

7. BATTERY CHARGING AND REPLACEMENT

- Only qualified personnel are allowed to service or charge the batteries. The instructions of this handbook and from the battery- manufacturer must be observed.
- The batteries are liquid acid traction batteries. Optional maintenance free batteries are available; for these batteries re- filling is prohibited.
- Recycling of batteries undergoes national regulations. Please follow these regulations.

- By handling batteries, open fire is prohibited, gases could cause explosion!
- In the area of battery charging neither burning materials nor burning liquids are allowed. Smoking is prohibited and the area must be ventilated.
- Park the truck securely before starting charging or installing/changing the batteries
- Before finishing the maintenance work, make sure, that all cables are connected correctly and that there are no disturbing towards other components of the truck.

As standard batteries, the truck is equipped with following liquid acid traction battery- type:

1pc 2Pzb 24V/ 180Ah

IT IS ONLY ALLOWED TO USE SEALED LIQUID ACID BATTERIES.
THE WEIGHT OF THE BATTERIES HAS AN INFLUENCE TO THE TRUCKS OPERATING BEHAVIOR.
PLEASE CONSIDER THE MAXIMUM OPERATING TEMPERATURE OF THE BATTERIES.

a. Replacement

Park the truck securely and switch off the truck with the key switch (10), and push the emergency button (8). Open the battery cover (17) and let it stay upright, unscrew and remove the battery fixing plate, disconnect the battery plug, then move the battery out with a crane.
The installation is in the reverse order of the removal.
Please connect the positive terminals firstly. Otherwise the tuck
could be damaged.

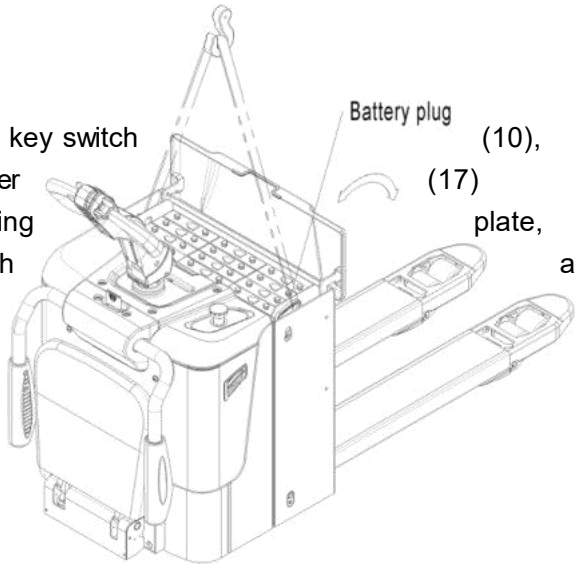

b.1 Indicator display (tiller head owned)

Fig. 10: Battery replacement

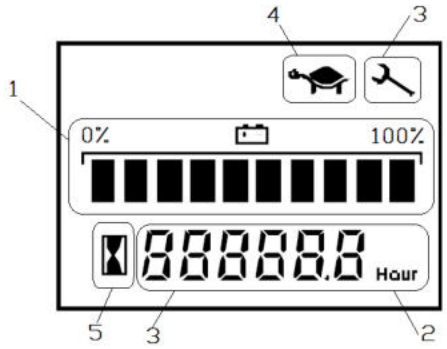

Fig. 11.1: Indicator display

(1) Power indicator: power of the battery is indicated by ten notches, each notch represents 10% power, 10 notches represents 100% power, one notch turns off after 10% power consumption . If the remaining power is less than 20%, the notches flashes to remind the operator of charging. When the battery is charged to the reset voltage of the indicator, the power display will be reset to 10 notches. This indicator has memory function.

(2) Hour counter: it is used for recording the working time of the truck, counting unit is hour, and the accuracy is 0.1 hour. This indicator has memory function.

(3) Fault: it consists of two parts, one is wrench mark, one is fault code. The wrench mark is normally off, it is on when a fault occurs; If the wrench mark is on, the hour counter will display the fault code. Check the fault code table for specific fault.

(4) Turtle symbol: normally the turtle symbol is off. Press the turtle speed button of the tiller, the turtle symbol appears, which indicates the slow speed state;

(5) Hourglass symbol: the hourglass starts to work when the function button of the tiller is activated, or the timing hourglass is in a static state.

b.2 Indicator display

The battery state of discharge is indicated by 10 red LED display notches.

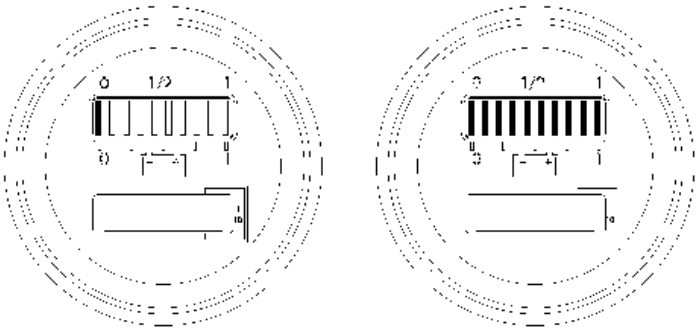

Battery discharge Battery fully charged

Fig.11.2: Battery discharge indicator

The LED on the far right is on when the battery is properly charged. As the SOC of the battery reduces, the LED turns on progressively.

- The second left LED flashes, indicating "energy reserve" (70% discharge).
- The left two LED flashes alternately, indicating "power empty" (80% discharge).

c. Charging

- Before charging ensure that you are using an appropriate charger for charging the installed battery!
- Before using the charger, please fully understand the instructions of the charger instructions.
- Always follow these instructions!
- The room, where you are charging must be ventilated.
- The exactly charge status can be only checked from the discharge indicator. To control the status, the charging must be interrupted and the truck must be started.

Park the truck at a dedicated secured area with a dedicated power supply.
Lower the forks and remove the load; if supplied remove the battery cover.

Switch the truck off and connect the battery plug to the charging plug of the charger.
The charger starts charging the battery if the charger is connected to the main power supply.
Disconnect the battery plug after the charger finished charging.
If supplied, assemble the battery cover. Connect the battery plug with the plug at the truck.

When charging is finished, disconnect the connector from the socket and place it in the designated pocket.

8. REGULAR MAINTENANCE

- Only qualified and trained personnel are allowed to do maintenance on this truck.
- Before maintaining, remove the load from the forks and lower the forks to the lowest position.
- If you need to lift the truck, follow chapter 4b by using designated lashing or jacking equipment. Before working, put safety devices (for instance designated lift jacks, wedges or wooden blocks) under the truck to protect against accidental lowering, movement or slipping.
- Please pay attention by maintain the tiller arm. The gas pressure spring is pre-loaded by compression, carelessness can cause injury.
- Use approved and from your dealer released original spare parts.
- Please consider that oil leakage of hydraulic fluid can cause failures and accidents.
- It is allowed to adjust the pressure valve only from trained service technicians.

If you need to change the wheels, please follow the instructions above. The castors must be round and they should have no abnormal abrasion.
Check the items emphasized maintenance checklist.

a. Maintenance checklist

Table 3: Maintenance checklist

		Interval(Month)			
		1	3	6	12
Hydraulic					
1	Check the hydraulic cylinder(s), piston for damage noise and leakage		●		
2	Check the hydraulic joints and hose for damage and leakage		●		
3	Inspect the hydraulic oil level, refill if necessary		●		
4	Refill the hydraulic oil (12 month or 1500 working hours)				●
5	Check and adjust function of the pressure valve (2000kg +0/+10%)				●
Mechanical system					
6	Inspect the forks for deformation and cracks		●		
7	Check the chassis for deformation and cracks		●		
8	Check if all screws are fixed		●		
9	Check the push rods for deformation and damages		●		
10	Check the gearbox for noise and leakage		●		
11	Inspect the wheels for deformation and damages		●		
12	Inspect and lubricate the steering bearing				●
13	Inspect and lubricate the pivot points		●		
14	Lubricate the grease nipples	●			
Electrical system					
15	Inspect the electric wiring for damage		●		
16	Check the electric connections and terminals		●		
17	Test the Emergency switch function		●		
18	Check the electric drive motor for noise and damages		●		
19	Test the display		●		
20	Check, if correct fuses are used		●		
21	Test the warning signal		●		
22	Check the contactor(s)		●		
23	Check the frame leakage (insulation test)		●		
24	Check function and mechanical wear of the accelerator		●		
25	Check the electrical system of the drive motor		●		
Braking system					
26	Check brake performance, if necessary replace the brake disc or adjust the air gap		●		
Battery					
27	Check the battery voltage		●		
28	Clean and grease the terminals and check for corrosion and damage		●		
29	Check the battery housing for damages		●		
30	Check and if necessary refill the battery with distillated water	●			
Charger					
31	Check the main power cable for damages			●	
32	Check the start-up protection during charging			●	
Function					

33	Check the horn function	●			
34	Check the air gap of the electromagnetic brake	●			
35	Test the emergency braking	●			
36	Test the reverse and regenerative braking	●			
37	Test the safety (belly) button function	●			
38	Check the steering function	●			
39	Check the lifting and lowering function	●			
40	Check the tiller arm switch function	●			
General					
41	Check if all decals are legible and complete	●			
42	Inspect the castors, adjust the height or replace these if worn out.		●		
43	Carry out a test run	●			

b. Lubricating points

Lubricate the marked points according to the maintenance checklist. The required grease specification is: DIN 51825, standard grease.

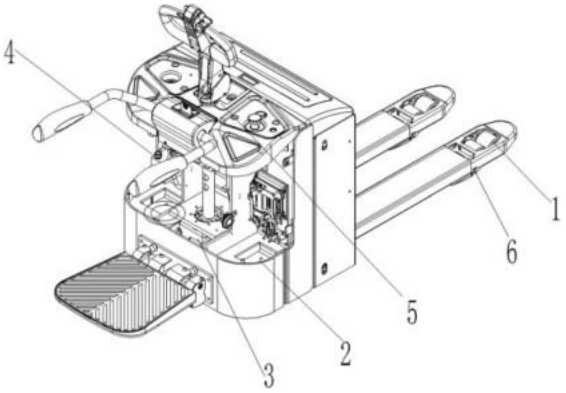

Fig. 12: Lubricating points

1. Load wheel bearings
2. Caster bearings
3. Gear box
4. Hydraulic system
5. Electric turning system
6. Joint

c. Check and refill hydraulic oil

It is recommended to use hydraulic oil in connection with average temperature:

Environment temperature	–5℃~25℃	>25℃
Type	HVLP 32，DIN 51524	HLP 46，DIN 51524
Viscosity	28.8-35.2	41.4 - 47
Amount	0.6L~0.8L	

Waste material like oil, used batteries or other must be probably disposed and recycled according to the national regulations and if necessary brought to a recycling company.
If necessary add oil at the filling point.

d. Checking electrical fuses

Remove the main cover. The fuses are located according to fig. 12.

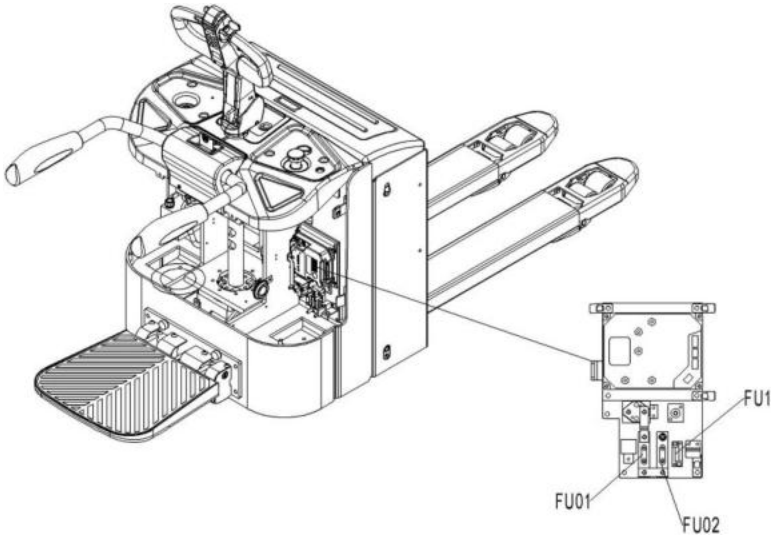

Fig. 12: Lubricating points

Table 4: Size fuses

	Rate
FU1	10A
FU01	150A
FU02	80A

9. TROUBLE SHOOTING

- If the truck has malfunctions follow the instructions, mentioned under chapter 6.

Table 5: Trouble shooting

TROUBLE	CAUSE	REPAIR
Load can't be lifted	Load weight too high	Lift only the max. capacity, mentioned on the ID-plate
	Battery discharged	Charge the battery
	Lifting fuse faulty	Check and eventually replace the lifting fuse
	Hydraulic oil level too low	Check and eventually refill hydraulic oil
	Oil leakage	Repair the hoses and/or the sealing of the cylinder
Oil leakage from air breathing	Excessive quantity of oil.	Reduce oil quantity.
Truck not starts	Battery is charging	Charge the battery completely

operating		and then remove the main power plug form the electrical socket.
	Battery not connected	Connect the battery correctly
	Fuse faulty	Check and eventually replace fuses
	Low battery	Charge the battery
	Combined emergency switch is activated	De-activate the combined emergency switch by insert and pull the knob.
	Tiller in the operating zone	Move the tiller firstly to the braking zone.

If the truck has malfunctions and can’t be operated out of the working zone, jack the truck up and go with a load handler under the truck and safe the truck securely. Then move truck out of the aisle.

10. WIRING/ CIRCUIT DIAGRAM

a. Electrical circuit diagram (Shijia tiller)

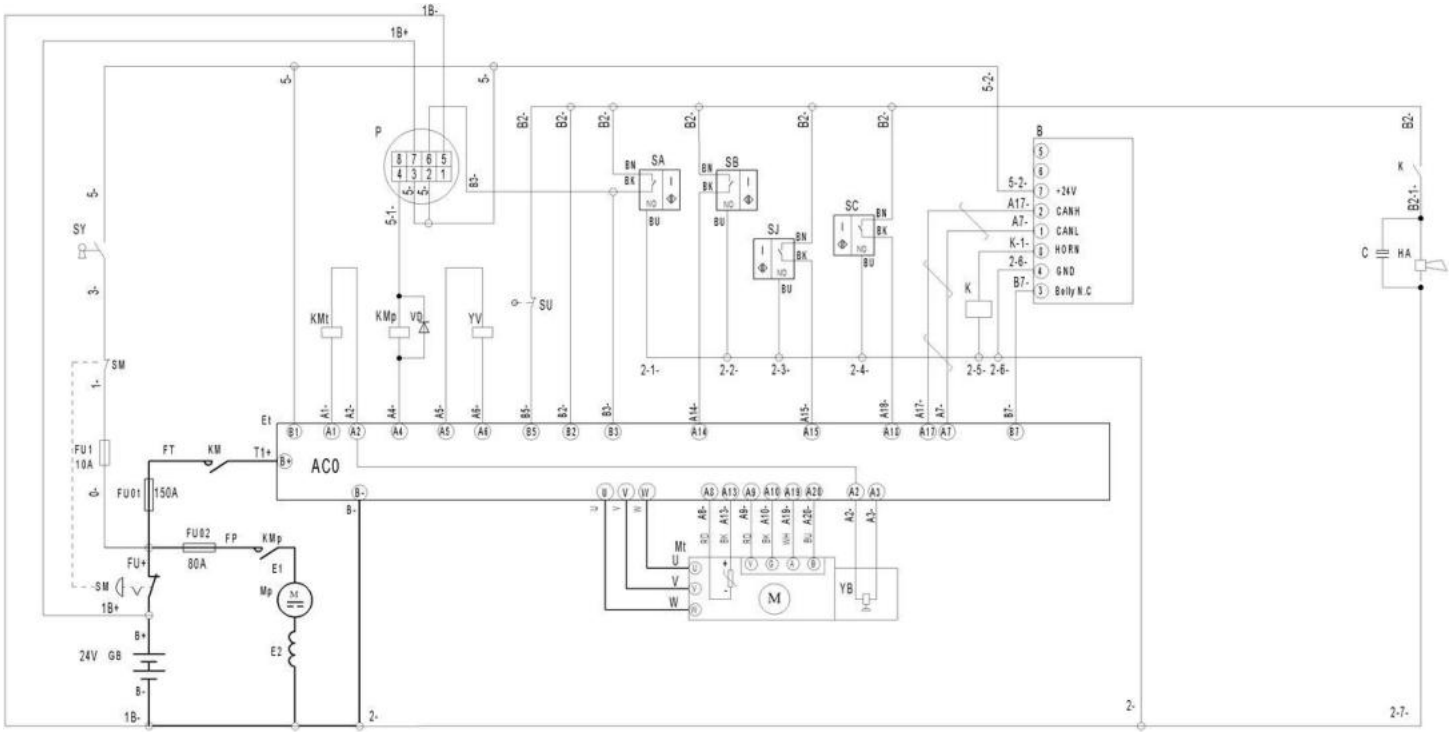

Fig. 13.1: Electrical

Table 6: Description of electrical diagram

Code	Item	Code	Item
GB	Battery	K	Relay
SM	DC power switch	B	Tiller
Et	Traction controller	YB	Electromagnetic brake
FU01	Fuse 150A	SA	Protective arm switch
FU02	Fuse 80A	SB	Protective arm switch
FU1	Fuse 10A	SJ	Pedal switch
C	Capacitor	SU	Limit micro switch
KM	Main contactor	YV	Lowering electromagnetic valve
KMp	Pump contactor	VD	Diode
Mp	Pump motor	HA	Horn
Mt	Traction motor		

b. Electrical circuit diagram (Detong tiller)

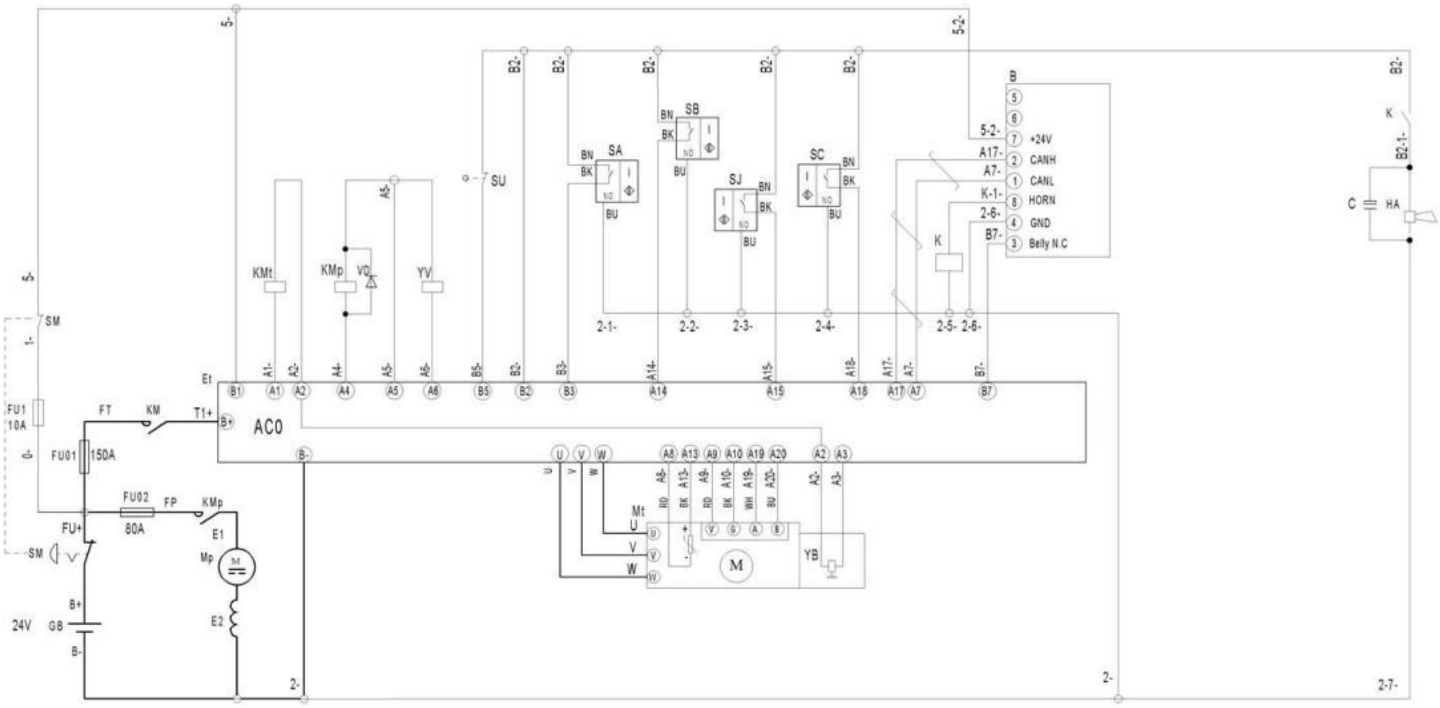

Fig. 13.2: Electrical

Table 7: Description of electrical diagram

Code	Item	Code	Item
GB	Battery	K	Relay
SM	DC power switch	B	Tiller
Et	Traction controller	YB	Electromagnetic brake
FU01	Fuse 150A	SA	Protective arm switch
FU02	Fuse 80A	SB	Protective arm switch
FU1	Fuse 10A	SJ	Pedal switch
C	Capacitor	SU	Limit micro switch
KM	Main contactor	YV	Lowering electromagnetic valve
KMp	Pump contactor	VD	Diode
Mp	Pump motor	HA	Horn
Mt	Traction motor	P	Power indicator
SY	Key switch		

c. Hydraulic circuit

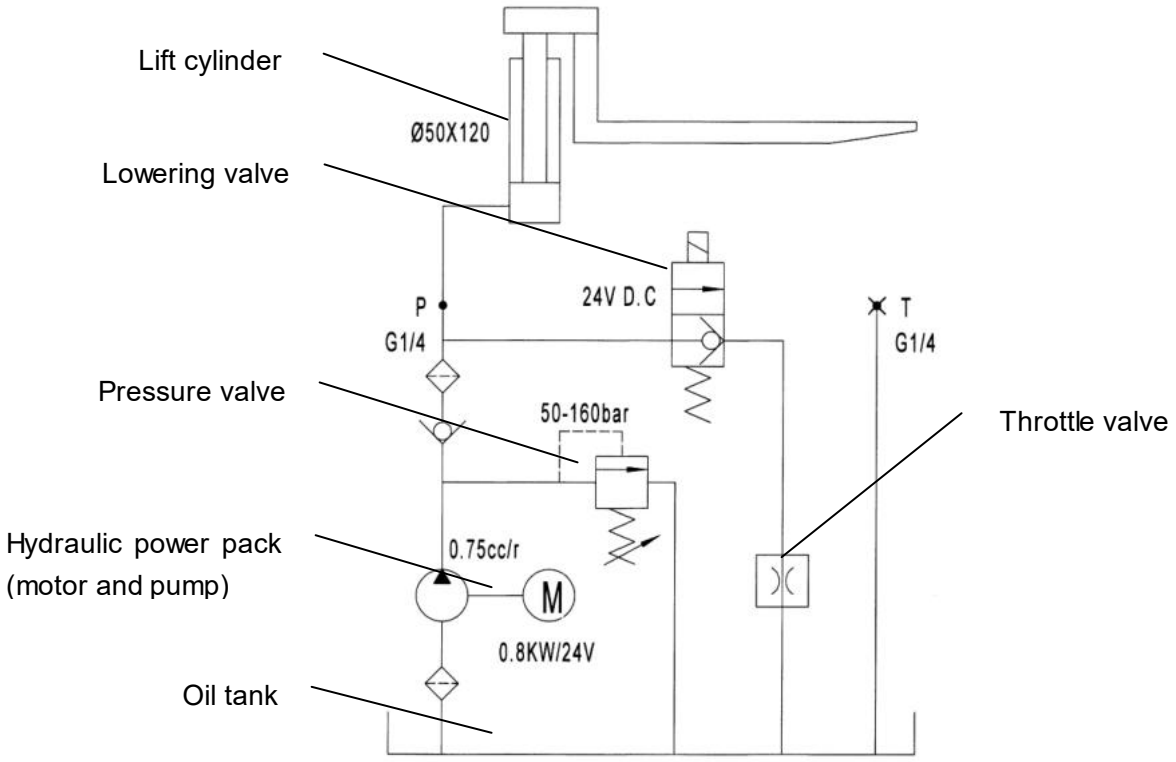

Fig. 14: Hydraulic circuit

11. SPECIALIZED STIPULATIONS FOR THE US- AMERICAN MARKET

The content in this chapter is specialized for the US-American market.

a. Foreword/ Compliance

Operating this truck requires knowledge which can be acquired from this instruction handbook. This handbook must be kept available throughout the entire period of use of the industrial truck.

IT IS LAW; YOU MUST BE TRAINED AND CERTIFIED TO OPERATE THIS TRUCK! READ AND OBEY ALL WARNINGS AND INSTRUCTIONS IN THIS MANUAL AND ON THE TRUCK!

Only properly trained operators are allowed to operate a powered industrial truck. Your employer must train you and certify, that you are qualified to operate this truck (required by OSHA § 1910.178). The training must satisfy OSHA requirements and as minimum the topics mentioned in this handbook. Depending on the context in this operating manual, the user can refer to several people, including the owner of the truck, anyone who leases or borrows this truck, and the operator as defined in ASME B56.1. Please pay attention to the section in ASME B56.1 concerning the operator. In this standard, it is defined that the safe operation is the responsibility of the operator (ASME B56.1-2003, Part II, section 5.1.1). You and others can be seriously injured or even killed if you don't use this truck correctly. Before operating your truck, inspect your truck and ensure that it is in correct working order. This truck was designed and built to current industry and government standards. For more information see following:

- ASME B56.1 (American Society of Mechanical Engineers)
- OSHA §1910.178 (Occupational Safety and Health Act)
- UL 583 (Underwriters Laboratory)
- ANSI Z535.4 (American National Standards Institute)

⚠ DANGER This sign indicates hazard situations, if not avoided, will result in serious injury or death. The instructions or precautions to this message must be observed to avoid the potential risk of injury or death.

⚠WARNING If not followed, warning indicates hazard situations which may lead to moderate injury. The instructions or precautions to this message must be observed to avoid the potential risk of injury or death.

⚠ CAUTION If not followed, caution indicated situations which may lead to minor injury. Instructions or precautions must be observed to avoid minor injury.

b. Description warning labels (only US- market)

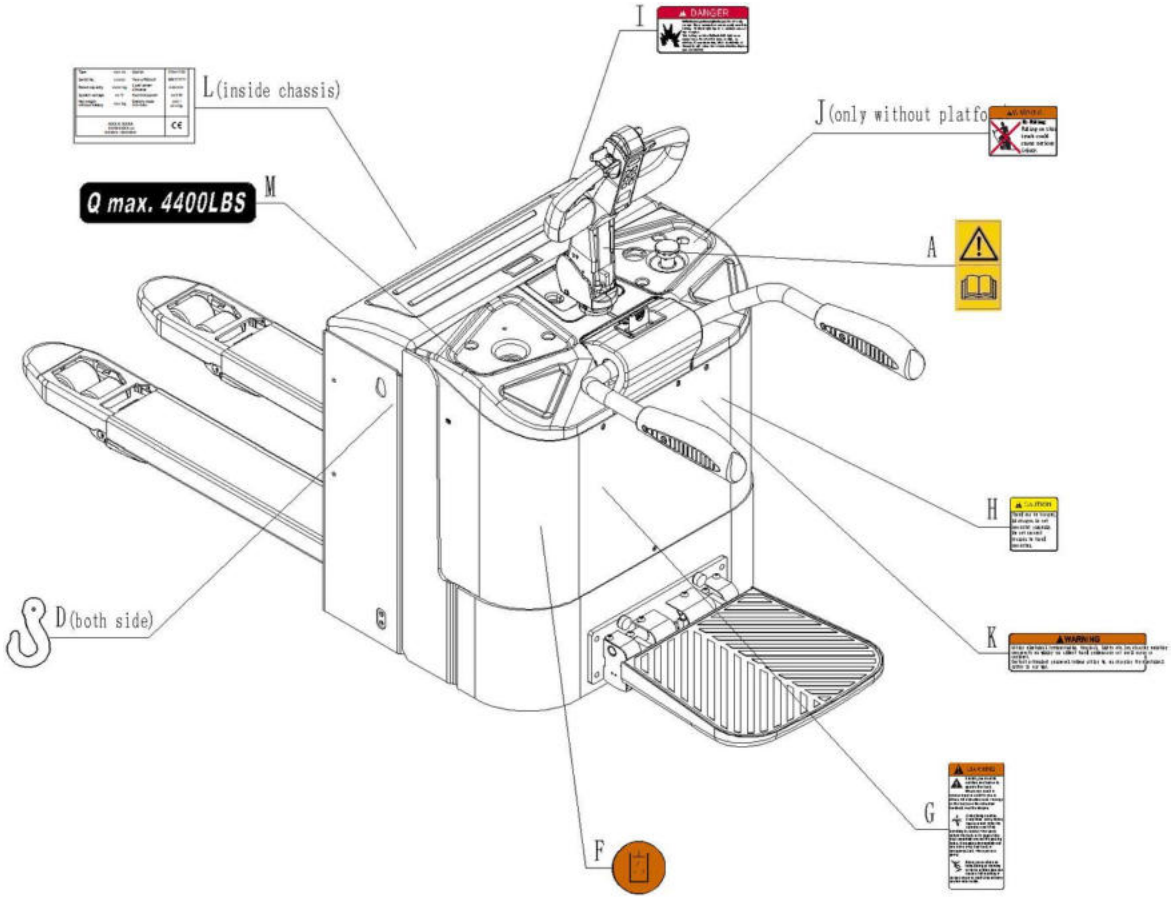

Fig. 15: Warning labels and safety devices (only USA)

A	Sticker to read and follow this instruction		
C	Capacity sticker	I	Sign danger battery
D	Hook mark	J	Sign danger not riding
F	Sign oil filling point	K	Sign warning electrical devices
G	Sign warning stay clear stop truck	L	Identification plate (ID-plate)
H	Sign caution charge		

The truck is equipped with an emergency button (8) which stops all lifting-, lowering-, driving- functions and engages the failsafe electromagnetic brake when it is pushed. The function is described in chapter 2c. Follow the instructions given on the decals. Replace the decals if they are damaged or missing.

Sign read and follow this instruction (A)

Sign oil filling point (F)

Sign warning stay clear stop truck (G)

Sign Caution charger(H)

Sign danger battery (I)

Sign danger not riding (J)
(only if not equipped with a foldable platform)

Sign warning electrical devices (K)

c. Technical data for US market

Drawing see page 8

Table 10: Main technical data for standard version(US market)

Type sheet for industrial truck acc. to VDI 2198				
Distinguishing mark	1.2	Manufacturer`s type designation		PTE 20-C
	1.3	Power(battery,diesel,petrol gas,manual)		电动
	1.4	Operator type		步行式/站驾式
	1.5	Load Capacity / rated load	Q (lbs)	4400
	1.6	Load centre distance	c (in)	24
	1.8	Load distance, centre of drive axle to fork	x(in)	35.1
	1.9	Wheelbase	y (in)	54.1
Weight	2.1	Service weight	lbs	1430
	2.2	Axle loading, laden front/rear	lbs	2220/3610
	2.3	Axle loading, unladen front/ rear	lbs	1140/290
Tires, chassis	3.1	Tires		Polyurethane (PU)
	3.2	Tire size, front	∅ x w (in)	9.1X2.8
	3.3	Tire size, rear	∅ x w (in)	3.2×4.3/3.3×3.3
	3.4	Additional wheels (dimensions)	∅ x w (in)	3.9×1.6
	3.5	Wheels, number front/ rear(x=driven wheels)		1×+2/4
	3.6	Tread, front	b_{10} (in)	22
	3.7	Tread, rear	b_{11} (in)	14.4/20.2
Dimensions	4.4	Lift height	h_3 (mm)	4.7
	4.9	Height of tiller in drive position min. / max.	h_{14} (in)	35.4/54.9
	4.15	Height, lowered	h_{13} (in)	3.3
	4.19	Overall length	l_1 (in)	74.8
	4.20	Length to face of forks	l_2 (in)	29.5
	4.21	Overall width	b_1 (in)	32.3
	4.22	Fork dimensions	s/e/l (in)	2.4/6.8/45.2
	4.25	Width across forks	b_5 (in)	21/27
	4.32	Ground clearance, centre of wheelbase	m_2 (in)	1.0
	4.33	Aisle width for pallets 1000 x 1200 crossways	Ast(in)	83.1
	4.34	Aisle width for pallets 800X1200 lengthways	Ast (in)	85.0
	4.35	Turning radius	Wa (in)	68.5
Performance data	5.1	Travel speed, laden/ unladen	mph	3.7/3.7
	5.2	Lift speed, laden/ unladen	fpm	5.3/6.9
	5.3	Lowering speed, laden / unladen	fpm	8.3/5.3
	5.8	Gradeability, laden/ unladen	%	3.5/3.7
	5.10	Service brake		Electromagnetic
Electric-motor	6.1	Drive motor rating S2 60min	HP	2.0
	6.2	Lift motor rating at S3 10%	HP	1.0
	6.3	Battery acc. to DIN 43531 /35 / 36 A, B, C, no		/
	6.4	Battery voltage, nominal capacity K5	V/Ah	24/160
	6.5	Battery weight (minimum)	lbs	340
	8.1	Type of drive control		AC -Speed Control
	8.4	Sound level at driver`s ear acc. to EN 12053	dB(A)	69

12. DECLARATION OF CONFORMITY(valid, if sold within the EU)

[GB] CE Declaration of Conformity
The signatory hereby declares that the specified machine conforms to the EU Directive 2006/42/EC (Machine Directive) and 2014/30/EU (Electro-Magnetic Compatibility, EMC) including their amendments as translated into national legislation of the member countries. The signatory is individually authorized to compile the technical documents.

[D] EG-KONFORMITÄTSERKLÄRUNG
Der Unterzeichner bescheinigt hiermit, dass die im Einzelnen bezeichnete Maschine den Europäischen Richtlinien 2006/42/EG (Maschinenrichtlinie) und 2014/30/EU (Elektromagnetische Verträglichkeit - EMV) einschließlich deren Änderungen sowie dem entsprechenden Rechtserlaß zur Umsetzung der Richtlinien in nationales Recht entspricht. Der Unterzeichner ist bevollmächtigt, die technischen Unterlagen zusammenzustellen.

[E] DECLARACIóN DE CONFORMIDAD CE
El signatario certifico por medio de la presente que la máquina especificada cumple con las Normas Europeas 2006/42/CE (Normativa para maquinarias) y 2014/30/EU (Compatibilidad electromagnética), incluyendo sus respectivas odificaciones, así como con el decreto-ley para la adaptación de las normas al derecho nacional. El signatario dispone de una autorización individual que le permite compilar la documentación técnica.

[F] DECLARATION DE CONFORMITE CE
Par la présente déclaration, les soussignés certifient que le machines spécifié ci-dessus est conforme à la loi et aux directives européennes 2006/42/CE (directive sur les machines) et 2014/30/EU (compatibilité électromagnétique - CEM), y compris aux modifications qui y sont apportées et à l'arrêté autorisant sa transposition en droit national. Chaque signataire est habilité à établir individuellement la documentation technique.

[NL] EG-CONFORMITEITSVERKLARING
Ondergetekenden verklaren hierbij dat - volgens de nationale wetgeving van de Lidstaten - de hierboven vermelde opgegeven machina beantwoordt aan de bepalingen qua veiligheid bij machines (EG richtlijn 2006/42/EC) en electro-magnetische compatibilteit (EG richtlijn 2014/30/EU). Ondergetekenden zijn ieder individueel gemachtigd het technisch dossier samen te stellen.

[P] DECLARAÇÃO DE CONFORMIDADE CE
Pela presente, os signatários certificam que o máquina especificado está conforme às Directivas Europeias 2006/42/CE („Máquinas") e 2014/30/EU („Inocuidade Electromagnética - IEM"), incluindo as alterações das mesmas e o respectivo decreto-lei para a transposição em lei nacional. Cada um dos signatários está autorizado a proceder à elaboração da documentação técnica.

[I] DICHIARAZIONE DI CONFORMITÀ CE
I sottoscritti dichiarano che il veicolo per trasporti interni a macchina specificato soddisfa le Direttive Europee 2006/42/EC (Direttiva Macchine) e 2014/30/EU (Compatibilità elettromagnetica - EMV) comprese le relative modifiche, come pure il rispettivo decreto legislativo per la conversione delle direttive in diritto nazionale. I sottoscritti sono singolarmente autorizzati alla creazione della documentazione tecnica.

[BG] ЕВРОПЕЙСКА ОБЩНОСТ - ДЕКЛАРАЦИЯ ЗА СЪОТВЕТСТВИЕ
Подписаните удостоверяват с настоящето, че подробно описаното машина средство отговаря на европейския норматив 2006/42/EG (норматив за машини) и на2014/30/EU (електро-магнетична съвместимост), включително с техните промени, както и на съответния указ за прилагане на нормативите в националното право. Подписаните при това са упълномощении поотделно да съставят техническата документация.

[CZ] EG - PROHLÁŠENÍ O SHODĚ
Níže podepsaný tímto potvrzuje, že podrobný popis uvedené stroje odpovídá Evropským směrnicím 2006/42/EC (směrnice pro stroje) a 2014/30/EU (elektromagnetická interference - EMV) včetně jejich pozdějších úprav, jakož i příslušným právním výnosům pro uplatnění příslušné směrnice v rámci národního práva. Každý z podepsaných jsou jednotlivě zplnomocněni k vytvoření technických podkladů.

[DK] EF-OVERENSSTEMMELSESERKLÆRING
Undertegnede attesterer hermed, at det specificerede maskine stemmer overens med de Europæiske Direktiver 2006/42/EU (maskindirektiv) og 2014/30/EU (elektromagnetisk kompatibilitet - EMC) samt med den modsvarende lovvedtagelse til implementering af direktiver i den nationale lovgivning. De undertegnede er hver for sig beføjet til at sammenstille de tekniske dokumenter.

[EST] EL vastavusavaldus
Allakirjutanud tõendavad käesolevaga, et üksikasjaliselt kirjeldatud täpsustatud masin vastab Euroopa direktiividele 2006/42/EÜ (Direktiiv masinate kohta) ja 2014/30/EU (Elektromagnetiline sobivus - EMS) kaasa arvatud nende muudatused ja nendele vastavatele õigusmäärustele direktiivide muutmiseks siseriiklikuks õiguseks. Iga allakirjutanu üksikult on volitatud koostama tehnilist dokumentatsiooni.

[FIN] EU-YHDENMUKAISUUSSELOSTUS
Allekirjoittaneet todistavat täten, että kukin erikseen mainittu omalla voimanlähteellä varustettu tehdaskone vastaa EU-direktiivien 2006/42/EC (koneenrakennusdirektiivi) ja 2014/30/EU (sähkömagneettinen yhteensopivuus – EMC) määräyksiä sekä niiden muutoksia ja niiden kansalliseen lainsäädäntöön soveltamista koskevaa oikeussääntöä. Jokaisella allekirjoittaneista on oikeus itsenäisesti laatia asiaankuuluvia teknisiä asiakirjoja.

[GR] ΔΗΛΩΣΗ ΣΥΜΜΟΡΦΩΣΗΣ ΕΟΚ
Οι υπογράφοντες βεβαιώνουν διά της παρούσης ότι το συγκεκριμένο μηχάνημα συμμορφώνεται προς την Κοινοτική Οδηγία 2006/42/ΕΚ («Μηχανήματα») και 2014/30/EU (Ηλεκτρομαγνητικής Συμβατότητας, ΗΜΣ), καθώς και οι τροποποιήσεις τους, όπως μεταφράστηκε στην εθνική νομοθεσία των χωρών μελών. Οι υπογράφοντες είναι σε κάθε περίπτωση εξουσιοδοτημένοι ατομικά να καταρτίσουν τα τεχνικά έγγραφα.

[H] EU KONFORMITÁSI NYILATKOZAT
Alulírottak ezennel igazolják, hogy a részletesen leírt a megadott gép megfelel a 2006/42/EC (Gép-Irányelv) és a 2014/30/EU (Elektromágneses összeférhetőség - EMV) Európai Irányelveknek, beleértve azok módosításait, valamint az irányelvek nemzeti jogba történő átültetésére irányuló megfelelő jogi rendelkezést. Továbbá az alulírottak mindegyike rendelkezik meghatalmazással arra nézve, hogy összeállíthatja a műszaki dokumentációt.

[LT] ES atitikimo deklaracija
Žemiau pasirašę asmenys patvirtina, kad atskirai aprašytas nurodyta mašina atitinka Europos Sąjungos direktyvas 2006/42/EB (Mašinų direktyva) ir 2014/30/EU (Elektromagnetinis suderinamumas – EMS) įskaitant jų pakeitimus, o taip pat ir atitinkamą teisės aktą dėl direktyvų įgyvendinimo nacionalinėje teisėje. Kiekvienas iš pasirašiusių asmenų turi teisę ruošti techninę dokumentaciją.

[LV] ES atbilstības deklarācija
Ar zemāk redzamajiem parakstiem tiek apliecināts, ka norādīts mašīna atbilst Eiropas Savienības normatīvām 2006/42/EG (Mašīnu normatīvas) un 2014/30/EU (Elektromagnētiskā atbilstība – EMV), ieskaitot to izmaiņas, kā arī atbilstošos tiesiskos rīkojumus normatīvu pielāgošanai nacionālajai likumdošanai. Parakstu īpašnieki ir atsevišķi pilnvaroti sastādīt tehniskās dokumentācijas.

[N] EU-KONFORMITETSERKLÆRING

Undertegnede bekrefter hermed at de enkelte betegnede maskin med kraftdrift tilsvarer de europeiske retningslinjene 2006/42/EC (maskinretningslinje) og 2014/30/EU (elektromagnetisk fordraglighet - EMV) inklusiv disses endringer og den tilsvarende rettsforordning til omsetning av nasjonal rett. Hver undertegnede er fullmektig til å sette sammen de tekniske dokumentene.

[PL] DEKLARACJA ZGODNOŚCI WE

Niżej podpisani deklarują, że poniżej opisana maszyna spełnia wymagania określone w dyrektywach Europejskich 2006/42/EC (Dyrektywa Maszynowa) i 2014/30/EU (Kompatybilności elektromagnetycznej - EMC) wraz z ich późniejszymi zmianami oraz odpowiednimi rozporządzeniami mającymi na celu przeniesienie tych dyrektyw do prawa krajów członkowskich. Sygnatariusz jest indywidualnie upoważniony do zestawiania dokumentacji technicznej.

[RO] DECLARAŢIE DE CONFORMITATE CE

Subsemnaţii adeveresc prin prezenta că vehiculul de specificat maşină descris individual corespunde directivelor europene 2006/42/CE (Directiva privind maşinile) şi 2014/30/EU (Compatibilitatea electromagnetică - CEM) inclusiv modificărilor lor precum şi actului legislativ corespunzător prentru transpunerea directivelor în drept naţional. Subsemnaţii sunt fiecare în parte împuterniciţi să întocmească documentaţia tehnică.

[RUS] Декларация соответствия стандартам ЕС

Настоящим лица, подписавшие документ, удостоверяют, что машина с указанной спецификацией соответствует европейским стандартам 2006/42/EG (Транспортная директива) и 2014/30/EU (Электромагнитная совместимость - EMC), включая изменения в них, а также соответствующим национальным стандартам и нормам. Каждое по отдельности лицо, подписавшее документ, имеет полномочия для составления технической документации.

[S] EG-KONFORMITETSFÖRKLARING

Undertecknarna intygar härmed att det i detalj betecknade maskin uppfyller de Europeiska direktiven 2006/42/EG (Maskindirektiv) och 2014/30/EU (Elektromagnetisk tålighet - EMV), inklusive ändringarna i detta och den motsvarande rättsförordningen för att omsätta direktiven i nationell rätt. Undertecknarna har var för sig fullmakt att sammanställa den tekniska dokumentationen.

[SK] vyhlásenie o zhode

Dolu podpísaní týmto potvrdzujeme, že podrobný popis uvedené stroje Zodpovedá Európskym smerniciam 2006/42/EC (ernica pre stroje) a 2014/30/EU (elektromagnetická tolerancia – EMV) vrátane jeho neskorších úprav, rovnako zodpovedá aj príslušným právnym nariadeniam na uplatnenie smerníc v rámci národného práva. Každý z podpísaných je jednotlivo splnomocnený na vytvorenie technických podkladov.

[SLO] EU IZJAVA O SKLADNOSTI

Podpisani s tem potrjujemo, da posamično označeno določeno stroj vozilo odgovarja Evropski direktivi 2006/42/EC (Direktiva o strojih) in 2014/30/EU (Elektromagnetna skladnost - EMV) vključno z njihovimi spremembami ter ustrezno pravno uredbo o prevzemu smernic v nacionalno pravo. Podpisniki so vsakokrat posamezno pooblaščeni za izdajanje tehnične dokumentacije.

[TR] AB Uygunluk Açıklaması

İmza sahibi şahıslar, ayrıntıları belirtilen makine aracının, 2006/42/EC (Makine Yönergesi) ve 2014/30/EU (Elektromanyetik Uyumluluk – EMC) no'lu Avrupa Yönergelerine ve bunların değişiklik sonucu oluşan metinlerine ve yönergelerin milli hukuk hükümlerine dönüştürülmesine dair ilgili hukuk kararnamesine uygun olduğunu tasdik ederler. İmza sahibi şahıslar teknik dosyaları bir araya getirmek için münferiden vekil tayin edildi.

(1) Type/ Typ/ Tipo/ Modello/ Tyyppi/ Tipo / ΤΥΠΟΣ/ Típus/ Tip/ Тип/ Tips/ Tipas/ Tüüp:
(2) Serial No./ Serien-Nr./ N°. de série/ Serienummer/ Nº de serie/ Numero di serie/ Serienr./ Sarjanro/ αυξάνων αριθμός/ Seriové číslo/ Szériaszám/ Nr.Seryjny/ Serijska številka/ Výrobné číslo/ Серийный номер/ Seri No./ Seerianr./ Sērijas Nr./ Serijos numeris:
(3) Year of constr./ Baujahr/ Année de constr./ Bouwjaar/ Año de constr./ Anno di costruzione/ Produktionsår/ Byggeår/ Tillverkningsår/ Valmistusvuosi / Ano de fabrico / έτος κατασκευής/ Rok výroby/ Gyártási év/ Rokprodukcji / Letnik / Год изготовления / Üretim yılı / Väljalaskeaasta / Izgatavošanas gads / Gamybosmetai
(4) Manufacturer or his authorized representative in Community/ Hersteller oder in der Gemeinschaft ansässiger Vertreter/ Fabricant ou son mandataire établi dans la Communauté/ Fabrikant of zijn in de Gemeenschap gevestigde gemachtigde/ Fabricante o representante establecido en la Comunidad/ Construtor ou Representante estabelecido na Comunidade/ Costruttore oppure il suo rappresentante nella Comunità/ Fabrikant eller dennesi Fællesskabet etablerede befuldmægtigede/ Produsent eller agent innen felleskapet/ Tillverkare eller representant inom EU/ Valmistaja tai yhteisömaassa oleva edustaja / V˘robce nebo jeho zastoupení/ Gyártó / producent albo jego przedstawiciel w EG (Wspólnota Europejska)/ Καηαζθεηαζηήο ή όκηλο ηληηθώλ αληηπξνζώπηο/ Üretici ya da Bölgedeki Yetkili Temsilci/ Proizvajalec ali pooblaščeni zastopnik s sedežem v EU/ Výrobca alebo zástupca so stálym bydliskom v EÚ / Изготовитель или его представитель, зарегистрированный в стране Содружества / Tootja või organisatsioonis paiknev esindaja/ Ražotājs vai vietējais uzņēmuma pārstāvis / Gamintojas arba šalyje reziduojantis atstovas:
(5) Date/ Datum/ Data/ Fecha/ datum/ Dato/ päiväys/ Kuupäev/ Datums/дата / Dátum/ dátum/ tarih/ ημερομηνία
(6) Authorised signatory/ Im Auftrag/ pour ordre/ Incaricato/ Por orden de/ por procuração/ op last van/ på vegne af/ på uppdrag/ Etter oppdrag/ psta./ Ülesandel / pavedus / v.i. / По поручению / megbízásából /длъжностно лице / z pověření / z poverenia / po nalogu / na polecenie / din sarcina / adına / θαη' ειληνή

(1) Type: **XX XX – Self-propelled industrial truck**
(2) Serial No: **XXXXXXXX**
(3) Year of constr.: **YYYY**
(4) Manufacturer or his authorized representative in Community:
Company name/ Street / Postal code Town/ Country
(5) Date: **YYYY.MM.DD**
(6) Authorized signatory: **Mr. Sample**

Sample
If you can read this text, your declaration is not complete. In this case please ask for a copy