Print Number：　　Print Date：

NOBLELIFT

Scan QR Code for More

Service Hotline: 836115

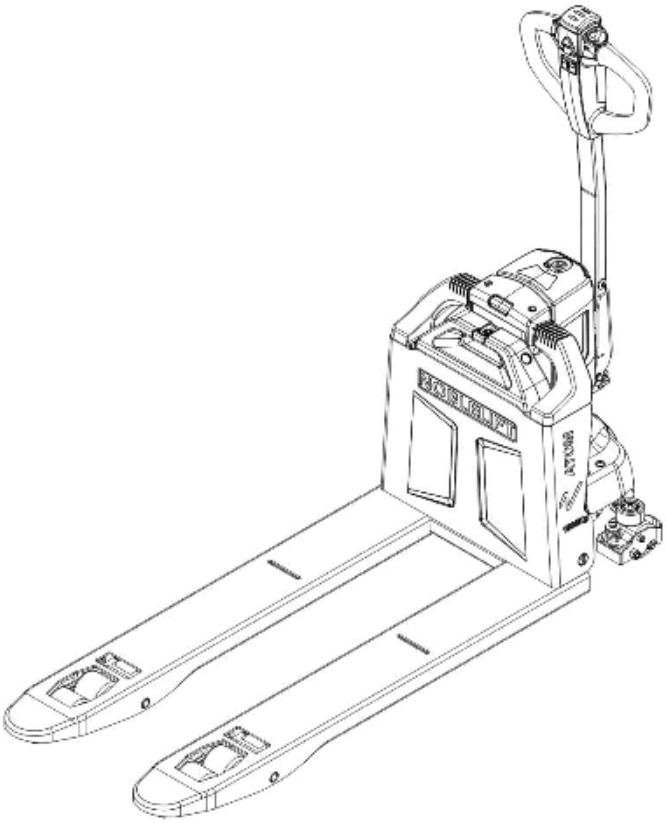

Electric Pallet Truck

PTE20Q2

PARTS MANUAL

510946010101

Version：V05

Truck Identification Number From：

Parts Manual

PTE20Q2-A-PM05EN

Please order spare parts from authorized dealers of Noblelift Intelligent Equipment Co., LTD.

In order to avoid wrong delivery, all the orders for spare parts should specify the following items:

- Truck model, identification number and manufacture year.
- Orders for spare parts of mast, hydraulic transmission unit, steering axle, motor, etc. shall indicate the manufacture number of these parts.
- Codes for Noblelift spare parts are shown in the table of parts manual. Please also pay attention to the description of supply status, order quantity, etc. (check the number listed in "Mark" column of the parts manual).

"Mark" Column:

The unmarked indicates the parts are in short supply cycle.

Number 1: supply as package. Indicating these that parts are small parts and seal parts, which are supplied in package unit and in short supply cycle.

Number 2: supply with constraints. Indicating that these spare parts are not in stock and will be prepared for production after receiving the order from customers, which are in long supply cycle.

Number 3: phasing-out supply. Indicating that these parts will be replaced by new parts due to technical improvements and the current stock will not be available when these parts run out. Please check the description of technical improvements notice.

Number 4: supply as assembly. Indicating that these parts are assembly parts defined by manufacture process, which cannot be supplied as a single part.

Number 5: check other tables.

This parts manual is the property of Noblelift and can be shared under the confidential agreement only, Noblelift has the right to claim for compensation of any unauthorized use. Copy without permission is not allowed. Figures in the manual are not limited by the original design. Noblelift Intelligent Equipment Co., LTD reserves the right to improve the products for continuous technology progress.

Table of Contents

Chapter 1: Drive System 4
01 Drive Unit Steering (20Q2)(510946013501) 4
02 Drive Unit Steering (20Q2)(510946013511) 6
03 Drive Assembly (YX)(510946013003). 8
04 Drive Assembly (YX)(510946013005). 10
Chapter 2: Hydraulic System 12
01 Hydraulic Components (20Q2)(510946023501) 12
Chapter 3: Truck Frame 14
01 Truck Frame (510946038501) 14
02 Truck Frame (510946038502) 16
Chapter 4: Steering System, Braking System, Wheels. 18
01 Tiller Unit (510946011001) 18
02 Tiller (510946011002) 20
03 Tiller (510946011003) 22
04 Load Wheel (Tandem) (510946017001). 24
05 Caster (510946016504). 26
06 Caster (510946016503). 28
07 Caster (510946016502). 30
08 Caster (510946016501). 32
Chapter 5: Electrical Parts 34
01 Wire Harness (510946033001). 34
02 Wire Harness (510946033002). 36
03 Charger (510946036501) 38
04 Traction Battery (510946037001). 40
Chapter 6: Special equipment. 42
01 Tiller Unit（Pedal-specific）(510846011011). 42
02 Pedal(510846018001) 44
Chapter 7: Others 46
01 Labels and Decals-EU (510946047002) 46
02 Labels and Decals-US (510946047004). 48
Appendix 50
01 Electrical Circuit Diagram (510946045501). 50
02 Electrical Circuit Diagram (510946045502). 51
03 Hydraulic Circuit Diagram (508046045502) 52
04 Consumable Parts List 53

Chapter 1: Drive System

01 Drive Unit Steering (20Q2)(510946013501)

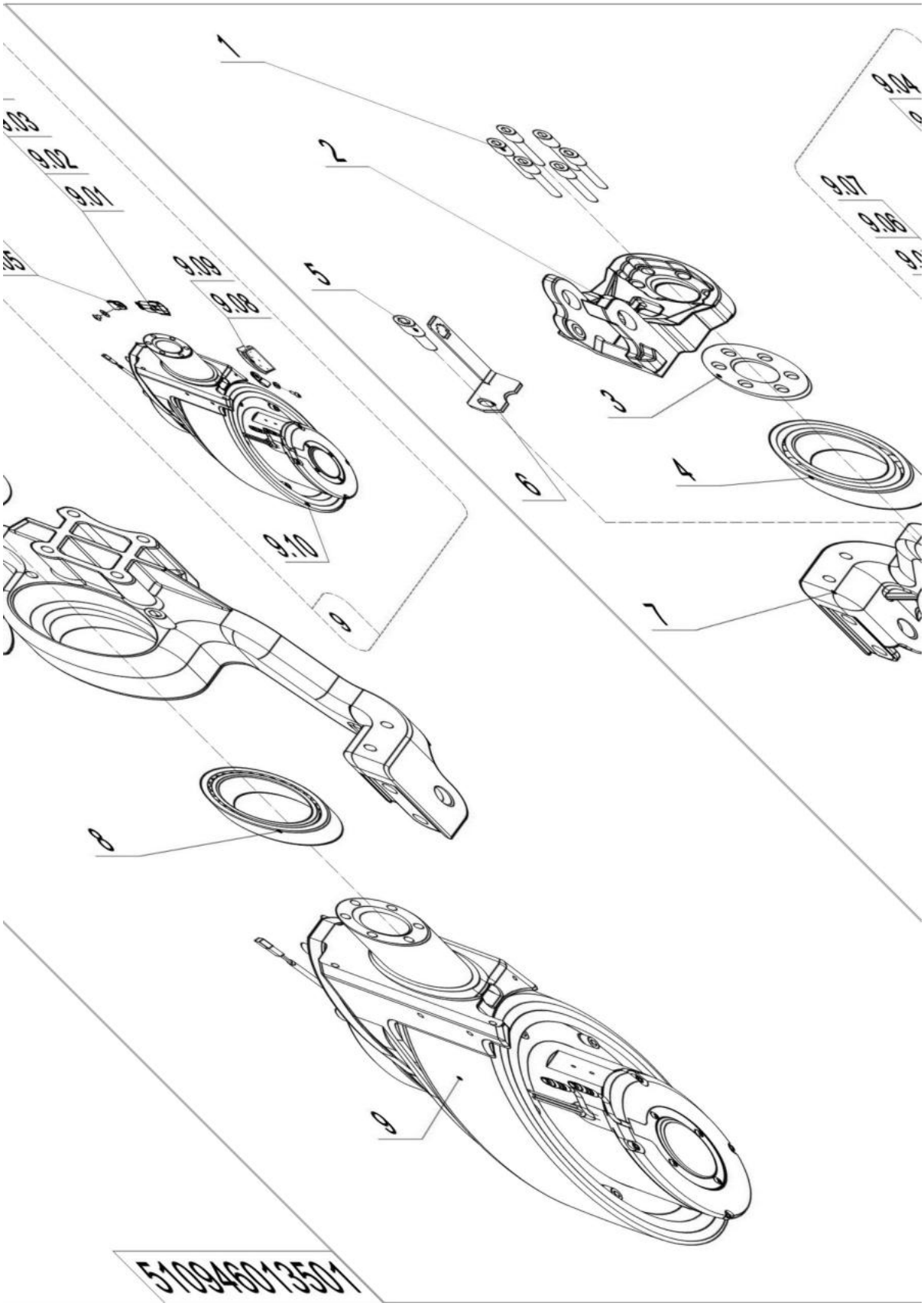

01 Drive Unit Steering (20Q2)(510946013501)

No.	Item Code	Mark	Item Description	Qty.	Substitute	Note
1	910200200058	1	Screw	6		
2	509913520004		Flange	1		
3	509913520002		Subplate	1		
4	910700200058		Bearing	1		
5	910200200074	1	Screw	2		
6	510813520001		Bracket	1		
7	509913520006		Wheel Mount	1		
8	910700600044		Bearing	1		
9	509998510100	2	Drive Unit	1		220
9	940900100063		Drive Unit	1		210
9.01	920400200003		Connector	1		
9.02	920400200017		Connector	2		
9.03	920400200018		Connector	2		
9.04	920400200004		Connector	1		
9.05	921300200001		Cable Clamp	2		
9.06	910200200012	1	Screw	2		
9.07	910400100003	1	Flat Washer	2		
9.08	920400200160		Connector	1		
9.09	920400200161		Connector	1		
9.10	940900100031		Drive motor	1		

02 Drive Unit Steering (20Q2)(510946013511)

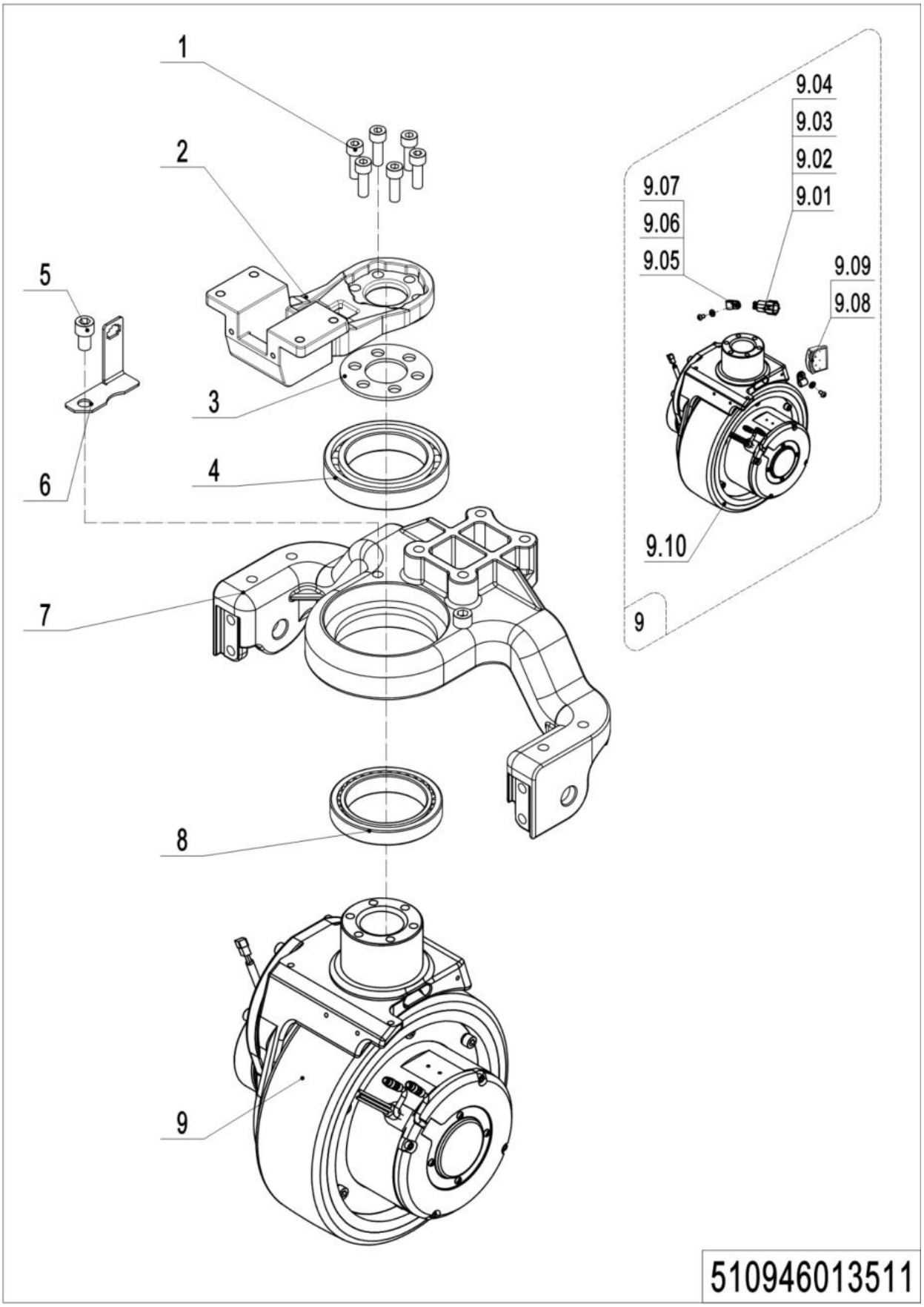

1= Supply as package. 2= Supply with constraints. 3= Phasing-out supply. 4= Supply as assembly. 5= Check other tables.

02 Drive Unit Steering (20Q2)(510946013511)

No.	Item Code	Mark	Item Description	Qty.	Substitute	Note
1	910200200058	1	Screw	6		
2	510813520000		Flange	1		
3	509913520002		Subplate	1		
4	910700200058		Bearing	1		
5	910200200074	1	Screw	2		
6	510813520001		Bracket	1		
7	509913520006		Wheel Mount	1		
8	910700600044		Bearing	1		
9	509998510100	2	Drive Unit	1		220
9	940900100063		Drive Unit	1		210
9.01	920400200003		Connector	1		
9.02	920400200017		Connector	2		
9.03	920400200018		Connector	2		
9.04	920400200004		Connector	1		
9.05	921300200001		Cable Clamp	2		
9.06	910200200012	1	Screw	2		
9.07	910400100003	1	Flat Washer	2		
9.08	920400200160		Connector	1		
9.09	920400200161		Connector	1		
9.10	940900100031		Drive motor	1		

03 Drive Assembly (YX)(510946013003)

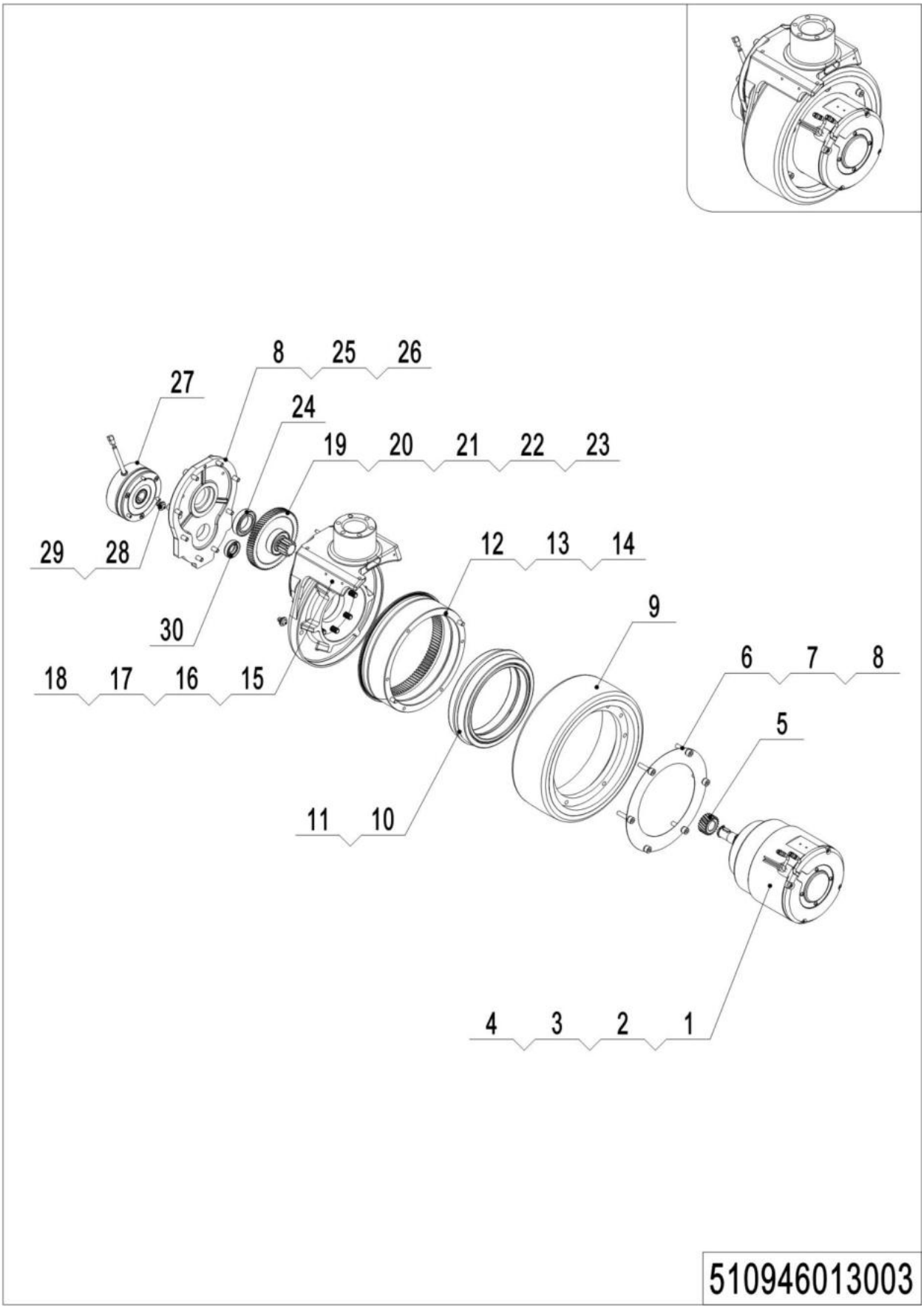

1= Supply as package. 2= Supply with constraints. 3= Phasing-out supply. 4= Supply as assembly. 5= Check other tables.

03 Drive Assembly (YX)(510946013003)

No.	Item Code	Mark	Item Description	Qty.	Substitute	Note
1	961001800001		Motor	1		
2	910600800005		Flat Key	2		
3	910401300006		Circlip	1		
4	910401300007		Circlip	1		
5	961000700006		Gear	1		
6	961001300009		Scraper Seal	1		
7	910200200140		Screw	6		
8	910400500018		Spring Washer	14		
9	961001300010		Wheel	1		
10	910700200044		Bearing	2		
11	910401400023		Circlip	1		
12	961001300008		Gear	1		
13	910600100013		Cylindrical Pin	2		
14	961001300007		Oil Seal	1		
15	961002200001		Gearbox	1		
16	910200200147		Screw	5		
17	910400500019		Spring Washer	5		
18	910600100003		Cylindrical Pin	1		
19	961001300002		Gear	1		
20	961001300005		Gear Shaft	1		
21	910600800006		Flat Key	1		
22	910700200057		Bearing	1		
23	910401300008		Circlip	1		
24	910700200046		Bearing	1		
25	961002200002		Cover	1		
26	910200200139		Screw	8		
27	961002200004		Brake	1		
28	911200100003		Oil Cup	2		
29	910800900010		Bonded Washer	2		
30	961000700012		Oil Seal	1		

1= Supply as package. 2= Supply with constraints. 3= Phasing-out supply. 4= Supply as assembly. 5= Check other tables.

04 Drive Assembly (YX)(510946013005)

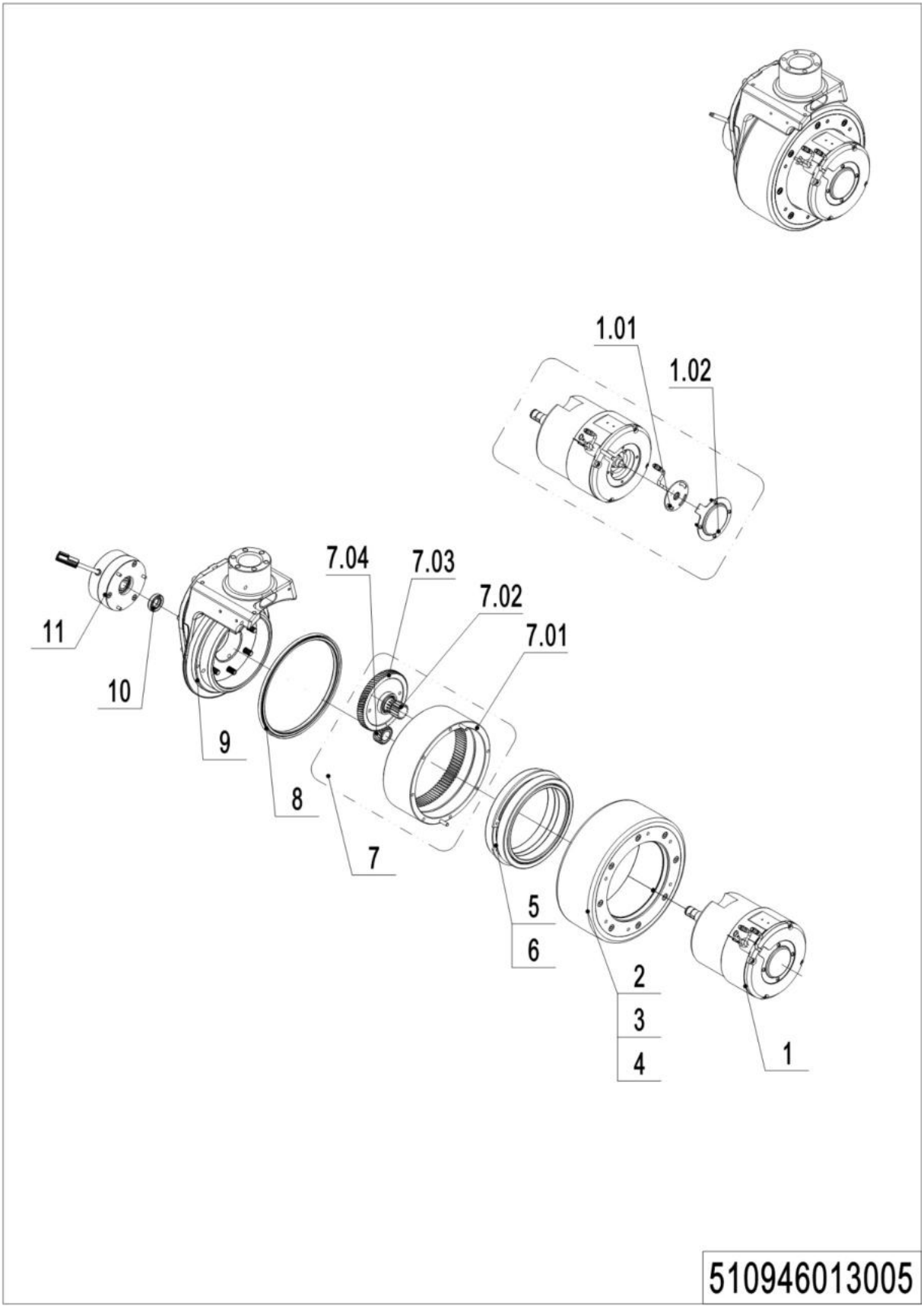

1= Supply as package. 2= Supply with constraints. 3= Phasing-out supply. 4= Supply as assembly. 5= Check other tables.

04 Drive Assembly (YX) (510946013005)

No.	Item Code	Mark	Item Description	Qty.	Substitute	Note
1	961004300001		Motor	1		
1.01	961001800002		Sensor	1		
1.02	961001800003		Cover	1		
2	961004000009		Wheel	1		
3	961004000011		Oil Seal	1		
4	910200200202		Screw	8		
5	910700200044		Bearing	2		
6	961004000007		Sleeve	1		
7	507798510006		Gear	1		
7.01	961004000006		Gear	1		
7.02	961004000003		Gear Shaft	1		
7.03	961004000002		Gear	1		
7.04	961004000005		Gear	1		
8	961004000010		Oil Seal	1		
9	509998510051		Gearbox	1		
10	961000700012		Oil Seal	1		
11	961002200004		Brake	1		

Chapter 2: Hydraulic System

01 Hydraulic Components (20Q2)(510946023501)

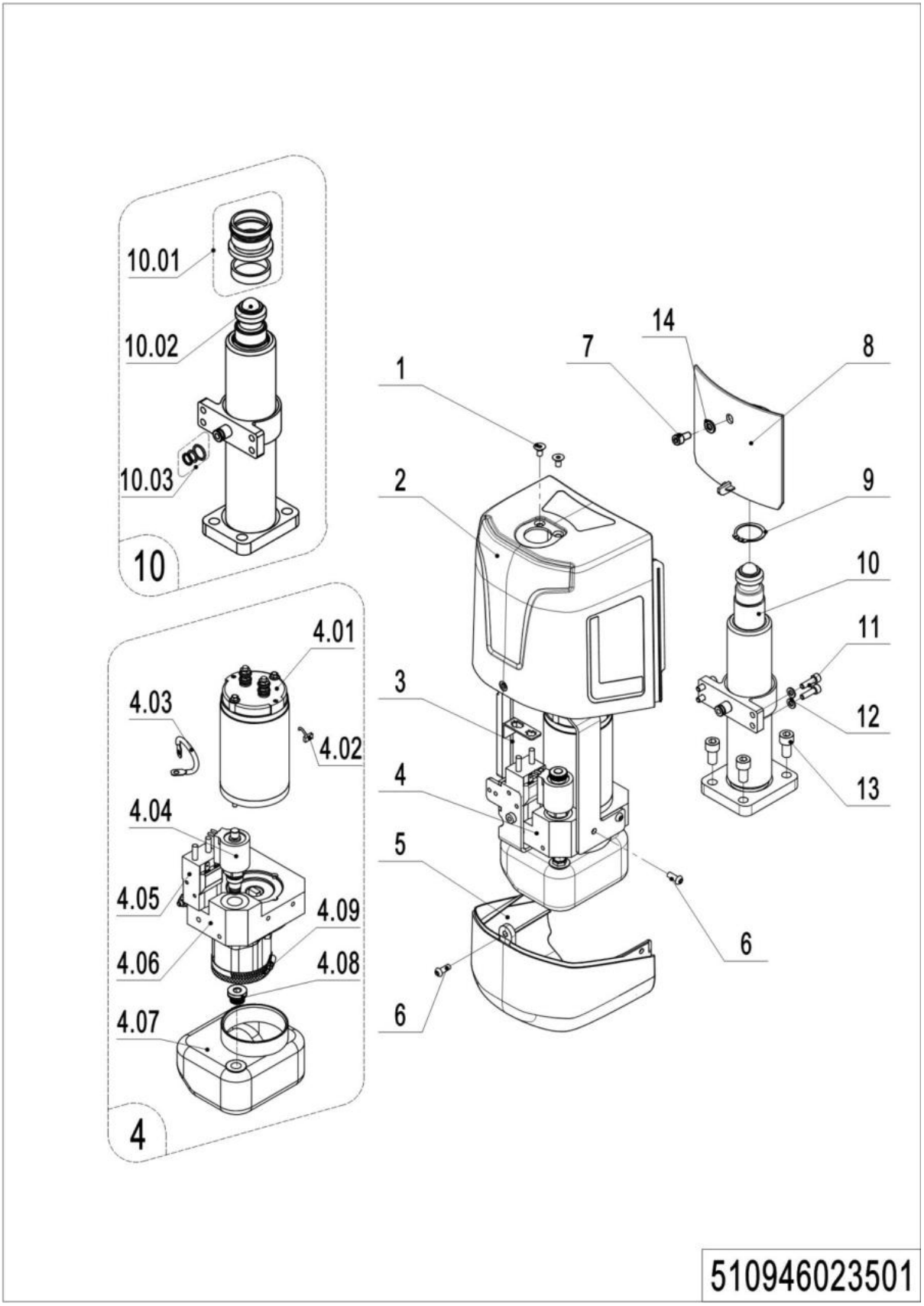

01 Hydraulic Components (20Q2)(510946023501)

No.	Item Code	Mark	Item Description	Qty.	Substitute	Note
1	910200400017	1	Screw	2		
2	510824020100		Cover	1		
3	510824010004		Mounting Rack	1		
4	950900100057	2	Pump Unit	1		
4.01	508598510007	2	Motor	1		
4.02	508598520014	2	Carbon Brush	1		
4.03	508598520001	2	Coil	1		YC048DC
4.04	505698520054	2	Magnetic Valve	1		SCV
4.05	508598520011		Switch	1		DK0148B
4.06	508598510008		Gear Pump	1		CBU-F1038
4.07	508598510010		Tank	1		0.4L-
4.08	508598510009		Cap-Tank	1		Z3/8
4.09	508598520005	2	Filter	1		
5	510824020101		Cover	1		
6	910200300018	1	Screw	4		
7	910200200176	1	Screw	2		
8	510924020101		Cover	1		
9	910401300017		Circlip	1		
10	509924010001		Cylinder	1		
10.1	509924010005		Seal Kit	1		
10.2	910701100019		Steel Ball	1		
10.3	508598510004		Seal Kit	1		
11	910200200036	1	Screw	4		
12	910400500005	1	Spring Washer	7		
13	910200200075	1	Screw	4		
14	509938520042		Washer	1		

Chapter 3: Truck Frame

01 Truck Frame (510946038501)

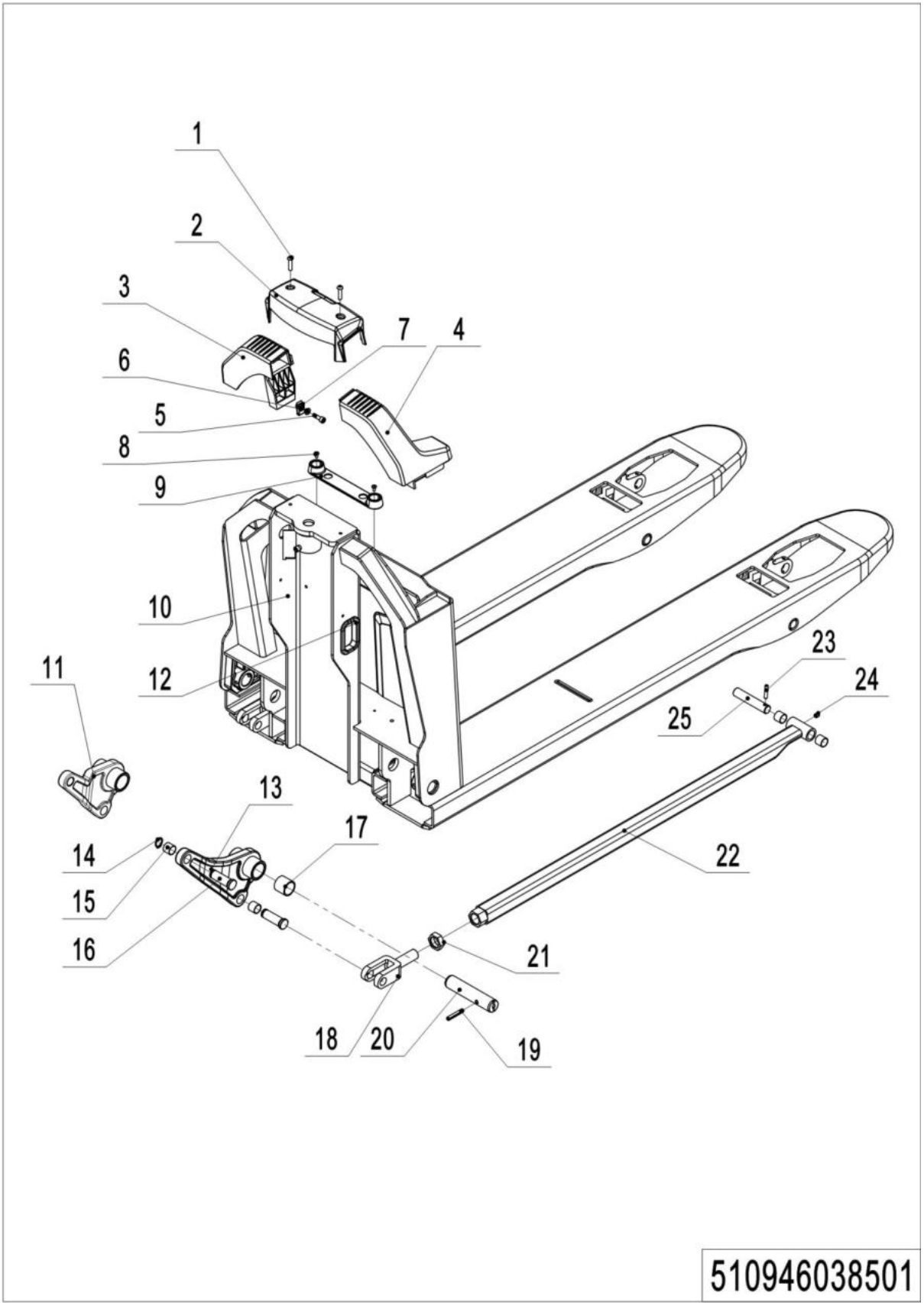

01 Truck Frame (510946038501)

No.	Item Code	Mark	Item Description	Qty.	Substitute	Note
1	910200200140	1	Screw	2		
2	510838520100		Cover	1		
3	510838520101		Side Plate	1		
4	510838520102		Side Plate	1		
5	910200200035		Screw	2		
6	910400100005		Flat Washer	2		
7	940400400001		Cage Nut	2		
8	910200500034		Screw	2		
9	509938520009		Battery Rack	1		
10	510938510000		Chassis(540x1150)	1		
11	510838510003		Rise Arm	1		
12	509938520041		Jacket	1		
13	510838510002		Rise Arm	1		
14	910401300007		Circlip	4		
15	940500100083		Bushing	8		
16	502338520026		Pin	4		
17	940500100097		Bushing	4		
18	502338520027		Push Rod Fork	2		
19	910600400041		Spring Pin	2		
20	510838520103		Axle	2		
21	910300400008		Nut	2		
22	509938510002		Push Rod (1150)	2		
23	910600500002		Spring Pin	4		
24	911200100001		Oil Cup	1		
25	502338520030		Axle	2		

02 Truck Frame (510946038502)

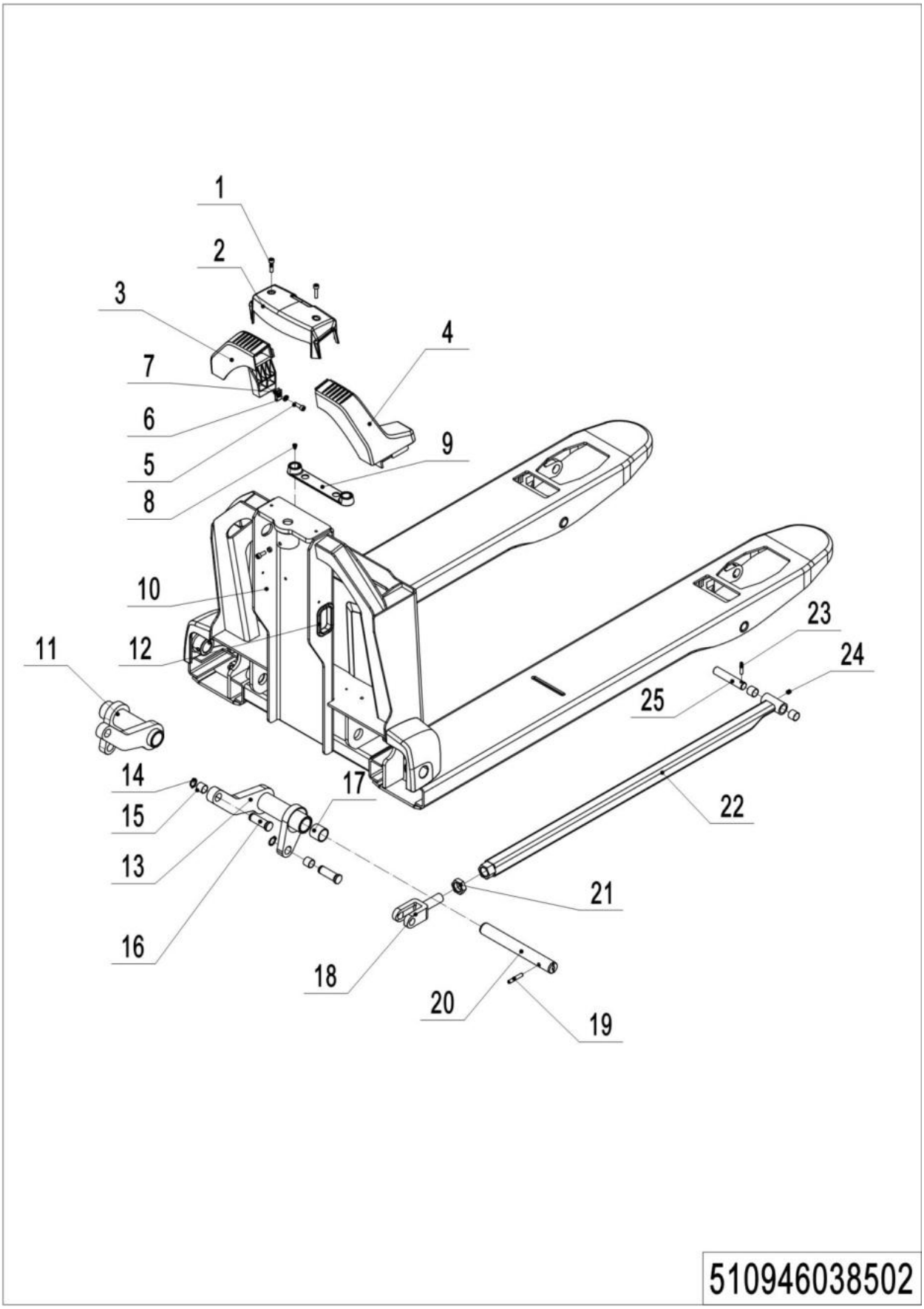

02 Truck Frame (510946038502)

No.	Item Code	Mark	Item Description	Qty.	Substitute	Note
1	910200200140	1	Screw	2		
2	510838520100		Cover	1		
3	510838520101		Side Plate	1		
4	510838520102		Side Plate	1		
5	910200200035		Screw	2		
6	910400100005		Flat Washer	2		
7	940400400001		Cage Nut	2		
8	910200500034		Screw	2		
9	509938520009		Battery Rack	1		
10	510938510001		Chassis(685x1150)	1		
11	510838510005		Rise Arm	1		
12	509938520041		Jacket	1		
13	510838510004		Rise Arm	1		
14	910401300007		Circlip	4		
15	940500100083		Bushing	8		
16	502338520026		Pin	4		
17	940500100097		Bushing	4		
18	502338520027		Push Rod Fork	2		
19	910600400041		Spring Pin	2		
20	510838520104		Axle	2		
21	910300400008		Nut	2		
22	509938510002		Push Rod (1150)	2		
23	910600500002		Spring Pin	4		
24	911200100001		Oil Cup	1		
25	502338520030		Axle	2		

Chapter 4: Steering System, Braking System, Wheels

01 Tiller Unit (510946011001)

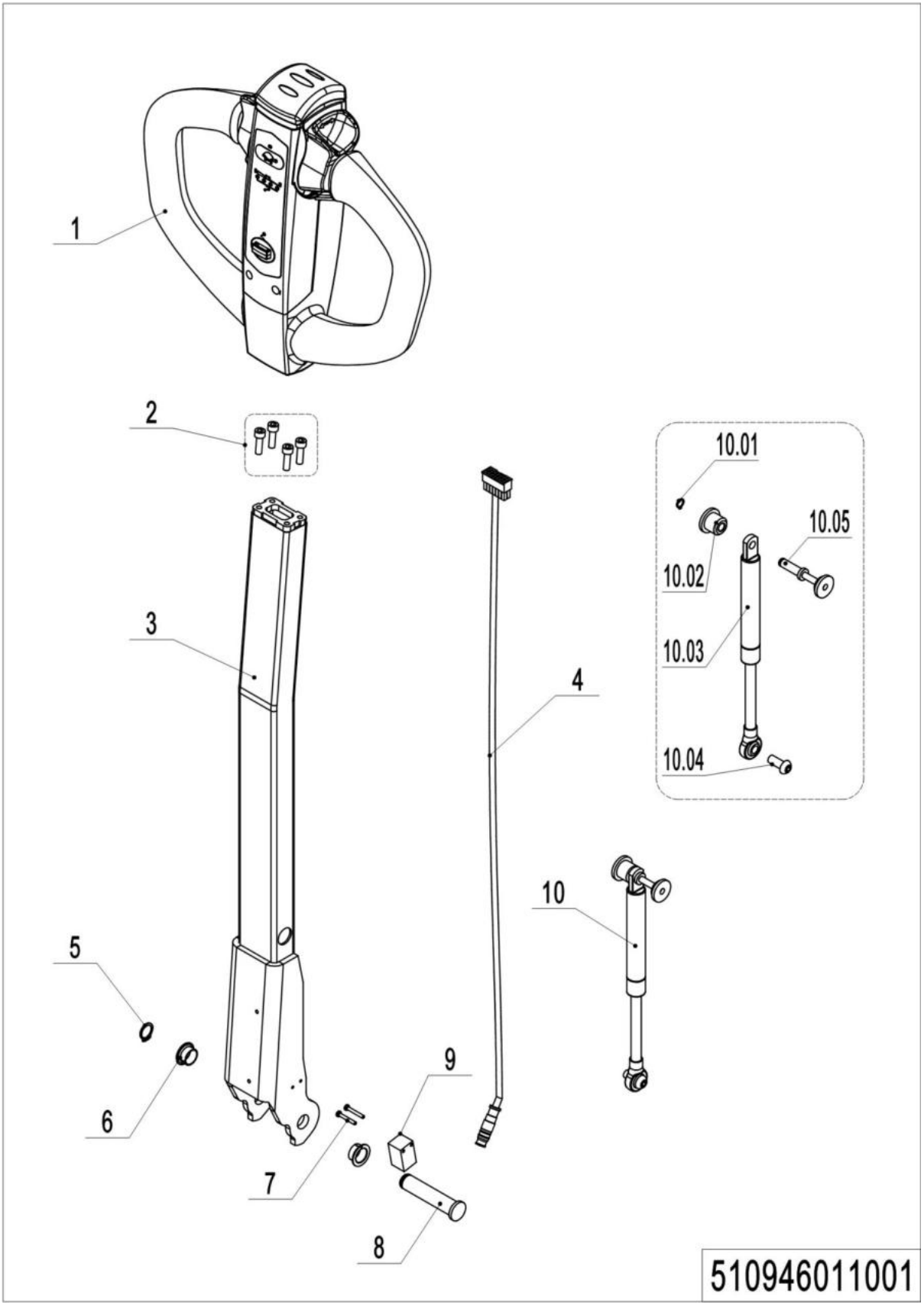

01 Tiller Unit (510946011001)

No.	Item Code	Mark	Item Description	Qty.	Substitute	Note
1	922100100092	2	Control Handle	1		手柄 T410C-3
1	922100100112	2	Control Handle	1		手柄 NL20A-1
2	910200200036	1	Screw	4		
3	509911010002		Tiller	1		
4	509933010007		Wire Harness	1		
5	910401300006		Circlip	1		
6	940500200001		Bushing	2		
7	941101100001	1	Screw	2		
8	508011020004		Pin	1		
9	920200400027		Proximity Switch	1		
10	508098510084		Gas Spring Kit	1		
10.1	910401300001		Circlip	1		
10.2	508011020005		Fixing Base	1		
10.3	508011010001		Gas Spring	1		
10.4	941100100011	1	Screw	1		
10.5	508011010002		Pin	1		

02 Tiller (510946011002)

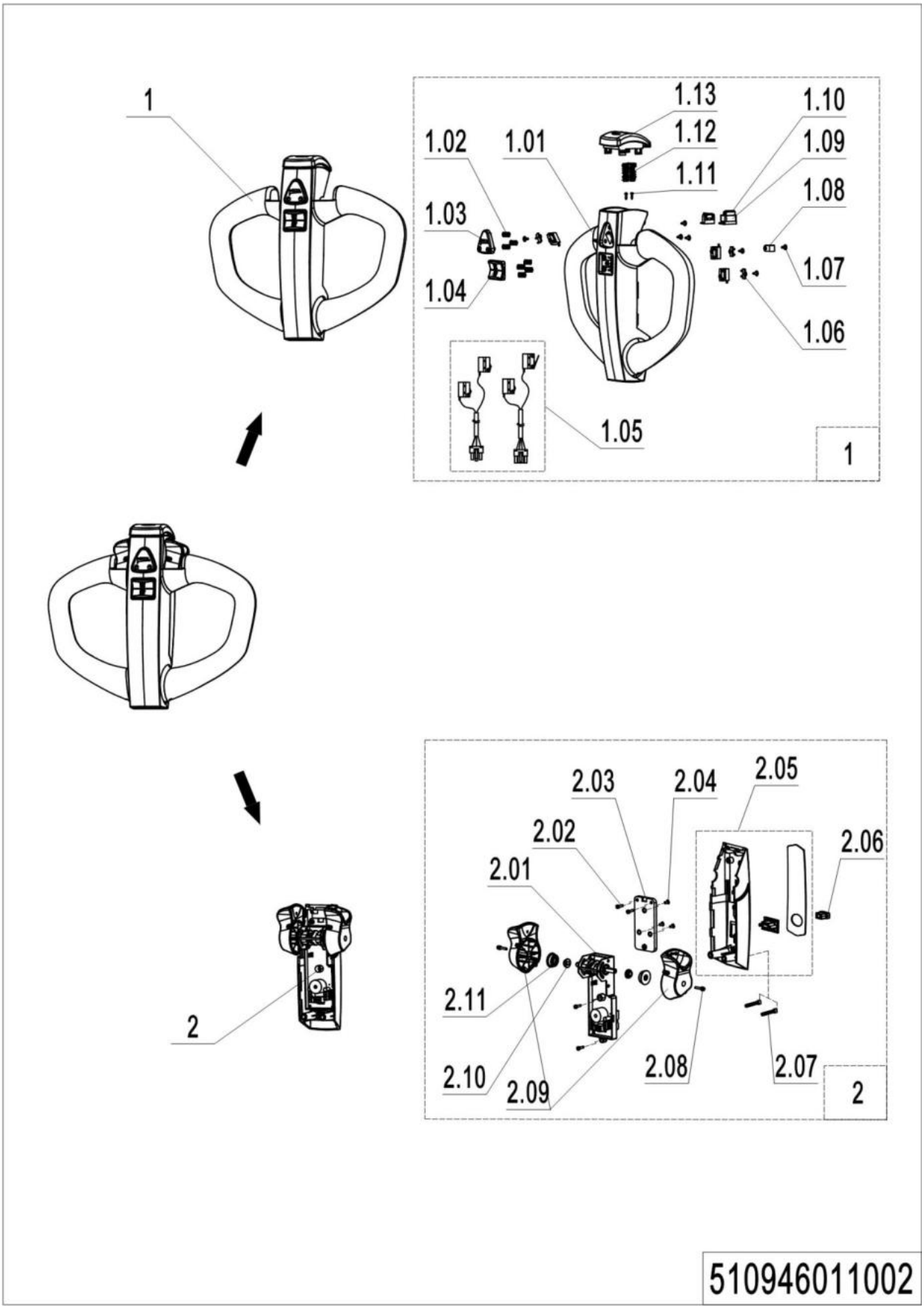

02 Tiller (510946011002)

No.	Item Code	Mark	Item Description	Qty.	Substitute	Note
--	922100100092	2	Control Handle	1		T410C-3
1	509998510018	2	Handle Cap Kit	1		
1.01	509998520036	2	Handle Cap	1		
1.02	509998520037		Spring	7		
1.03	509998520038		Button Cap	1		
1.04	509998520039		Button Cap	1		
1.05	509998510019		Microswitch Kits	1		
1.06	509998520045		Locating Plate	3		
1.07	910200600002	1	Screw	7		
1.08	509998520044		Cable Clip	1		
1.09	509998520042		Fixing Mount	1		
1.10	509998520043		Hoop	1		
1.11	910201400001	1	Screw	2		
1.12	509998520041		Spring	1		
1.13	509998520040		Switch	1		
2	509998510037	2	Handle Cap Kit	1		
2.01	509998520057		Accelerator	1		
2.02	910200400004	1	Screw	4		
2.03	509998520047		Fixing Plate	1		
2.04	910200500019	1	Screw	3		
2.05	509998510033		Handle Cap Kit	1		
2.06	509998520048		key	2		
2.07	910200200030	1	Screw	2		
2.08	910200200004	1	Screw	2		
2.09	509998510034		Traction lever	1		
2.10	509998520049		Sleeve	2		
2.11	509998520050		Spacer Bush	2		

03 Tiller (510946011003)

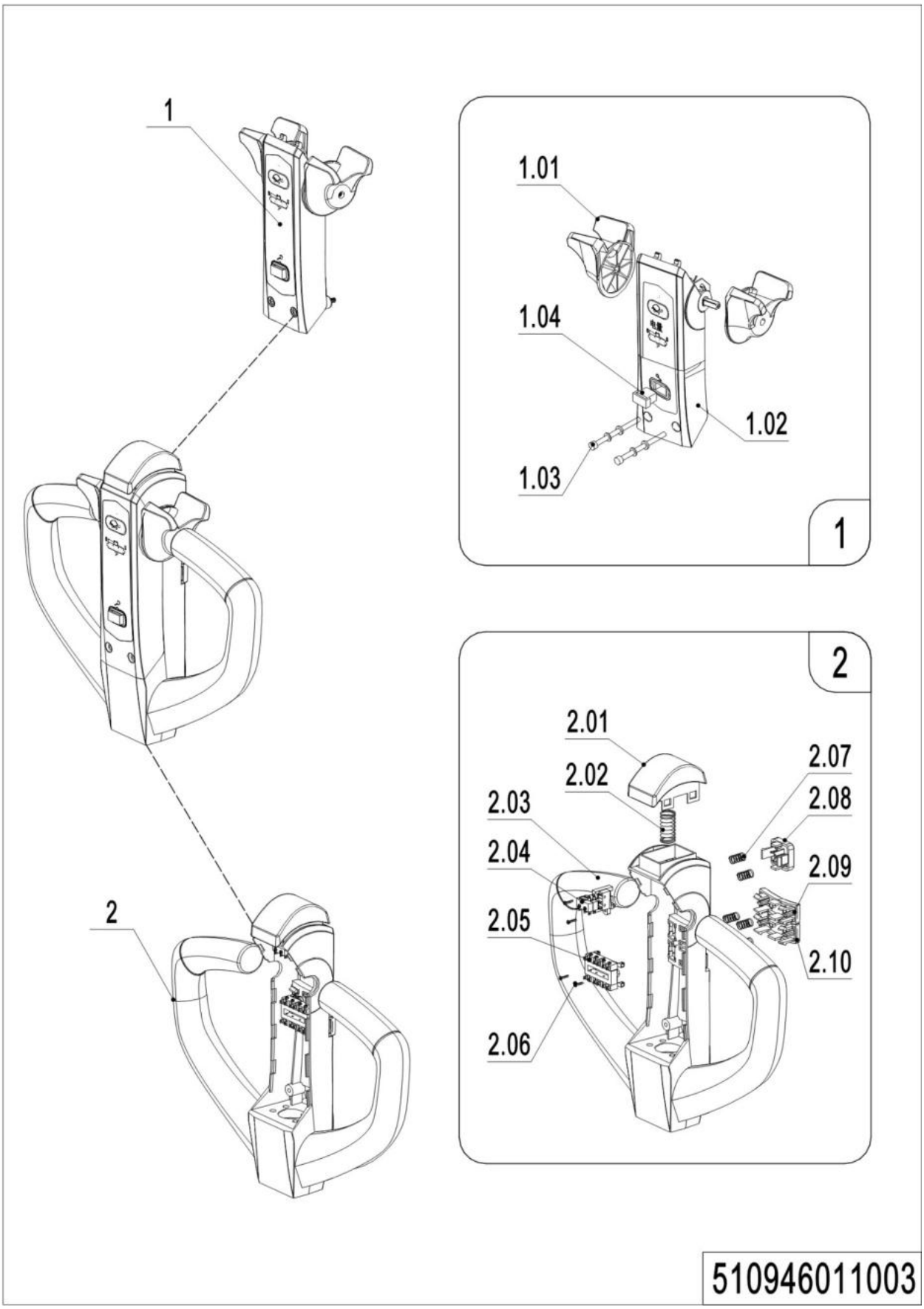

1= Supply as package. 2= Supply with constraints. 3= Phasing-out supply. 4= Supply as assembly. 5= Check other tables.

03 **Tiller** (510946011003)

No.	Item Code	Mark	Item Description	Qty.	Substitute	Note
--	922100100112	2	Control Handle	1		NL20A-1
1	509998510041	2	Handle Cap Kit	1		
1.01	509998520022		Dial Key	2		
1.02	509998520105		Circuit board	1		
1.03	509998520065		Screw	2		
1.04	509998520024		Key	1		
2	508398510001		Handle Cap Kit	1		
2.01	509998520027		Button Cap	1		
2.02	509998520071		Spring	1		
2.03	509998520030	2	Control Handle body	1		
2.04	509998520031		Wire Harness	1		
2.05	509998520032		Wire Harness	1		
2.06	509998520070		Screw	4		
2.07	509998520029		Spring	6		
2.08	509998520033		Button Cap	1		
2.09	509998520034		Button Cap	1		
2.10	509998520035		Button Cap	1		

04 Load Wheel (Tandem) (510946017001)

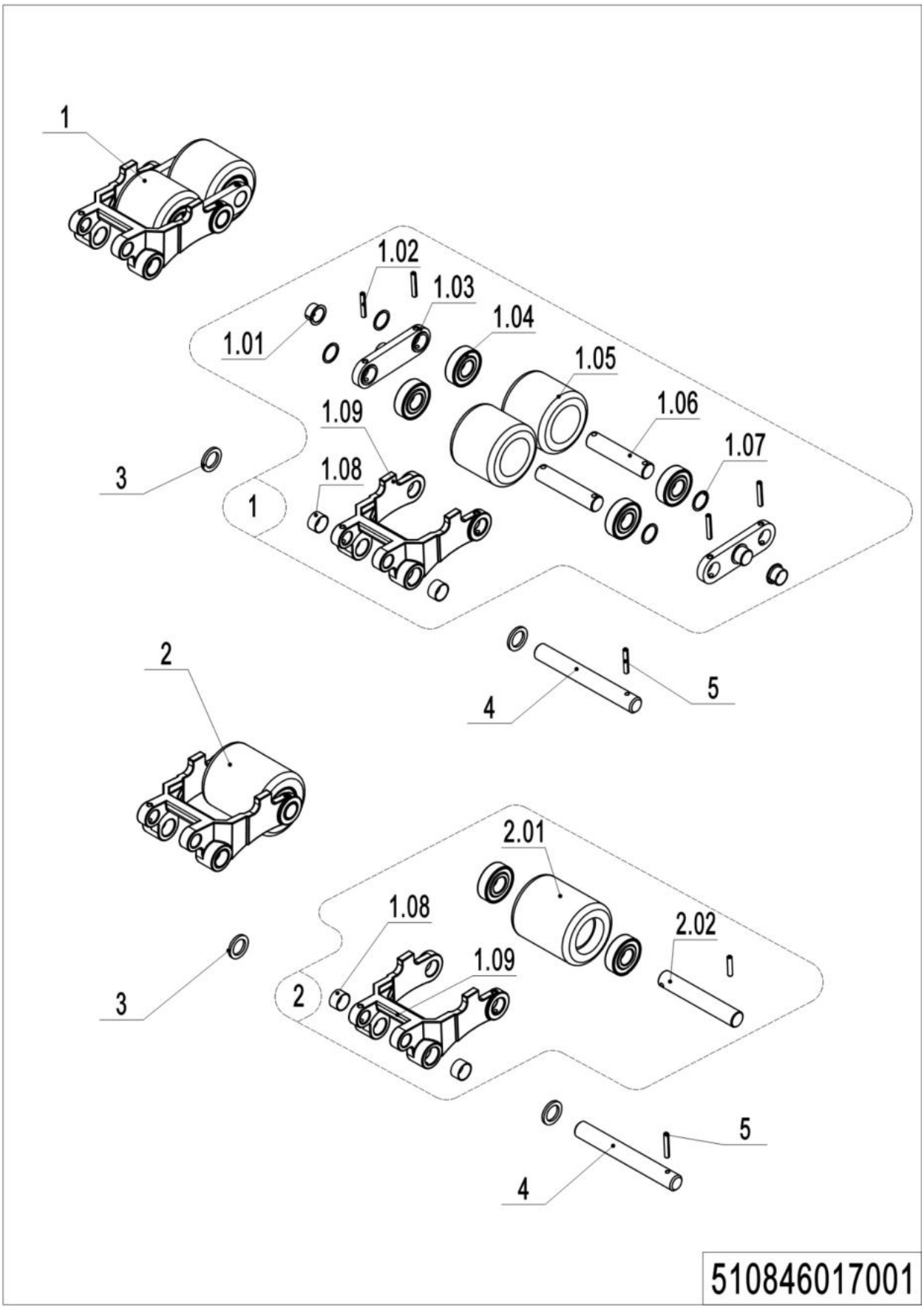

04 Load Wheel (Tandem) (510946017001)

No.	Item Code	Mark	Item Description	Qty.	Substitute	Note
1	509998510004		Wheel	2		
1.01	940500200038		Bushing	4		
1.02	910600500004	1	Spring Pin	8		
1.03	508017020001		Plate	4		
1.04	910700200019		Bearing	8/4		double /Single
1.05	940300300047		Wheel Φ80x70	4		
1.06	502317020001		Axle	4		
1.07	940600500013		Washer	8/4		double /Single
1.08	940500100088		Bushing	4		
1.09	508038520130		Riser	2		
2	509998510005	2	Wheel	2		
2	509998510065		Wheel	2		75mm
2.01	940300300023		Wheel Φ80x93	2		
2.01	940300300002		Wheel Φ74x93	2		75mm
3	502338520033		Roller	4		
4	502338520031		Pin	2		
5	910600400025		Spring Pin	2		

05 Caster (510946016504)

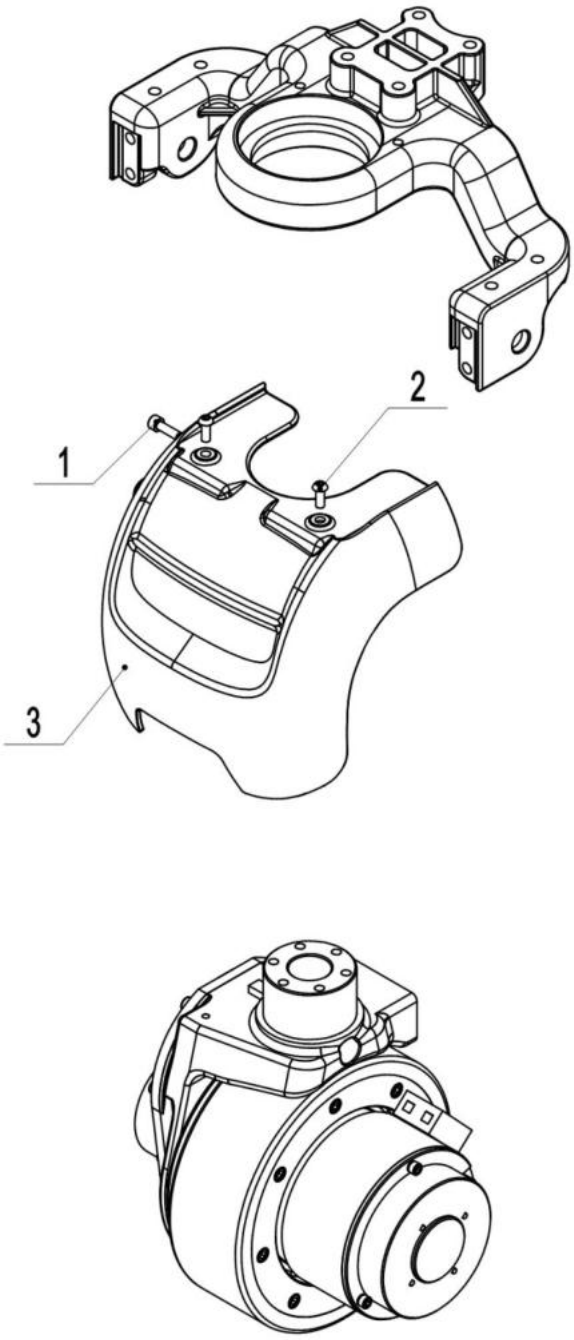

510946016504

1= Supply as package. 2= Supply with constraints. 3= Phasing-out supply. 4= Supply as assembly. 5= Check other tables.

05 Caster (510946016504)

No.	Item Code	Mark	Item Description	Qty.	Substitute	Note
1	910200200036	1	Screw	1		
2	910200300018	1	Screw	2		
3	509916520002		Apron	1		

06 Caster (510946016503)

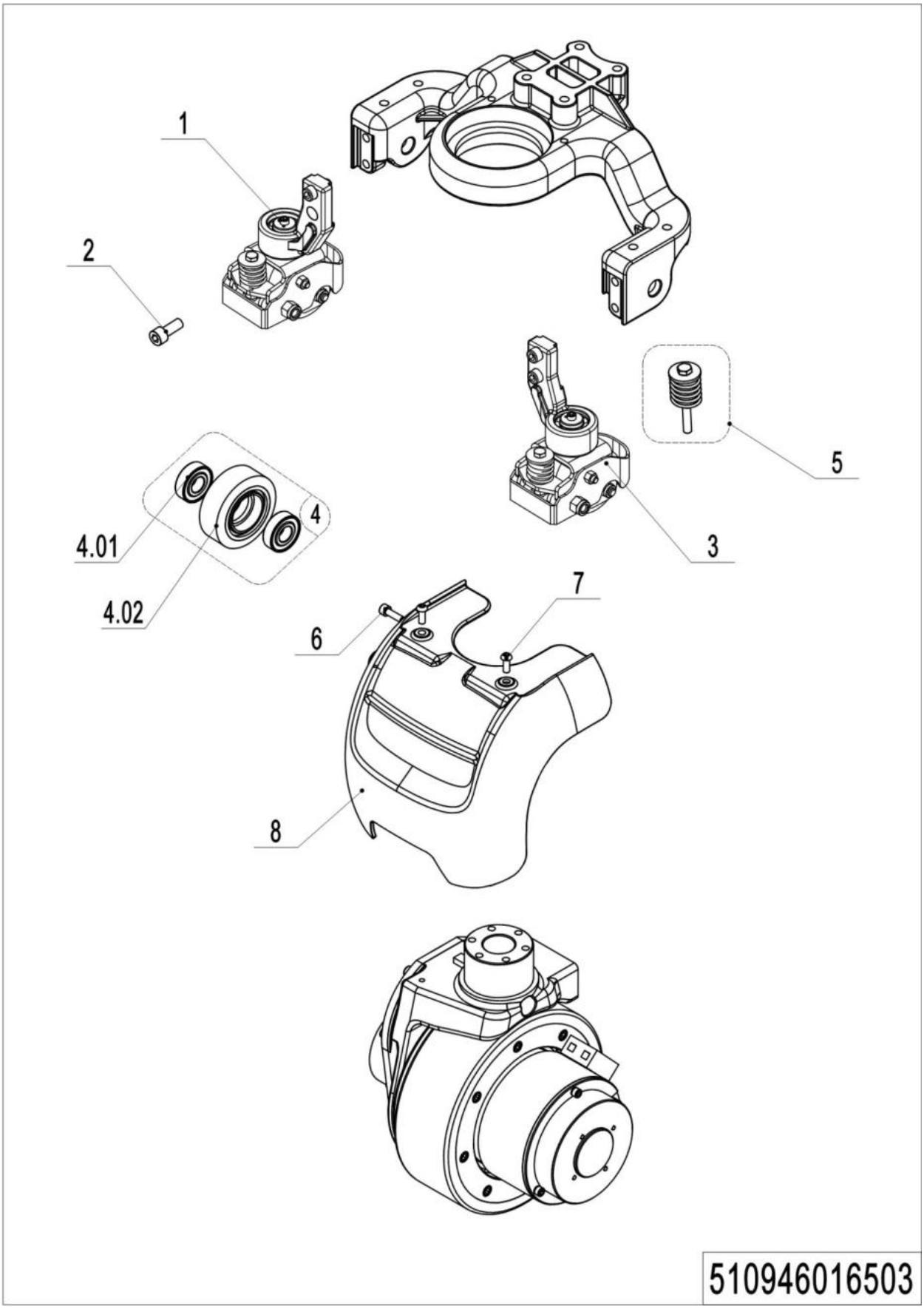

1= Supply as package. 2= Supply with constraints. 3= Phasing-out supply. 4= Supply as assembly. 5= Check other tables.

06 Caster (510946016503)

No.	Item Code	Mark	Item Description	Qty.	Substitute	Note
1	508016510002		Caster Assembly	1		
2	910200200076	1	Screw	4		
3	508016510005		Caster Assembly	1		
4	502398510015	2	Load Wheel Kit	2		
4.01	910700200018		Bearing	4		
4.02	940300300017		WheelΦ80x30	2		
5	508098510047		Spring Components	2		
6	910200200036	1	Screw	1		
7	910200300018	1	Screw	2		
8	509916520002		Apron	1		

07 Caster (510946016502)

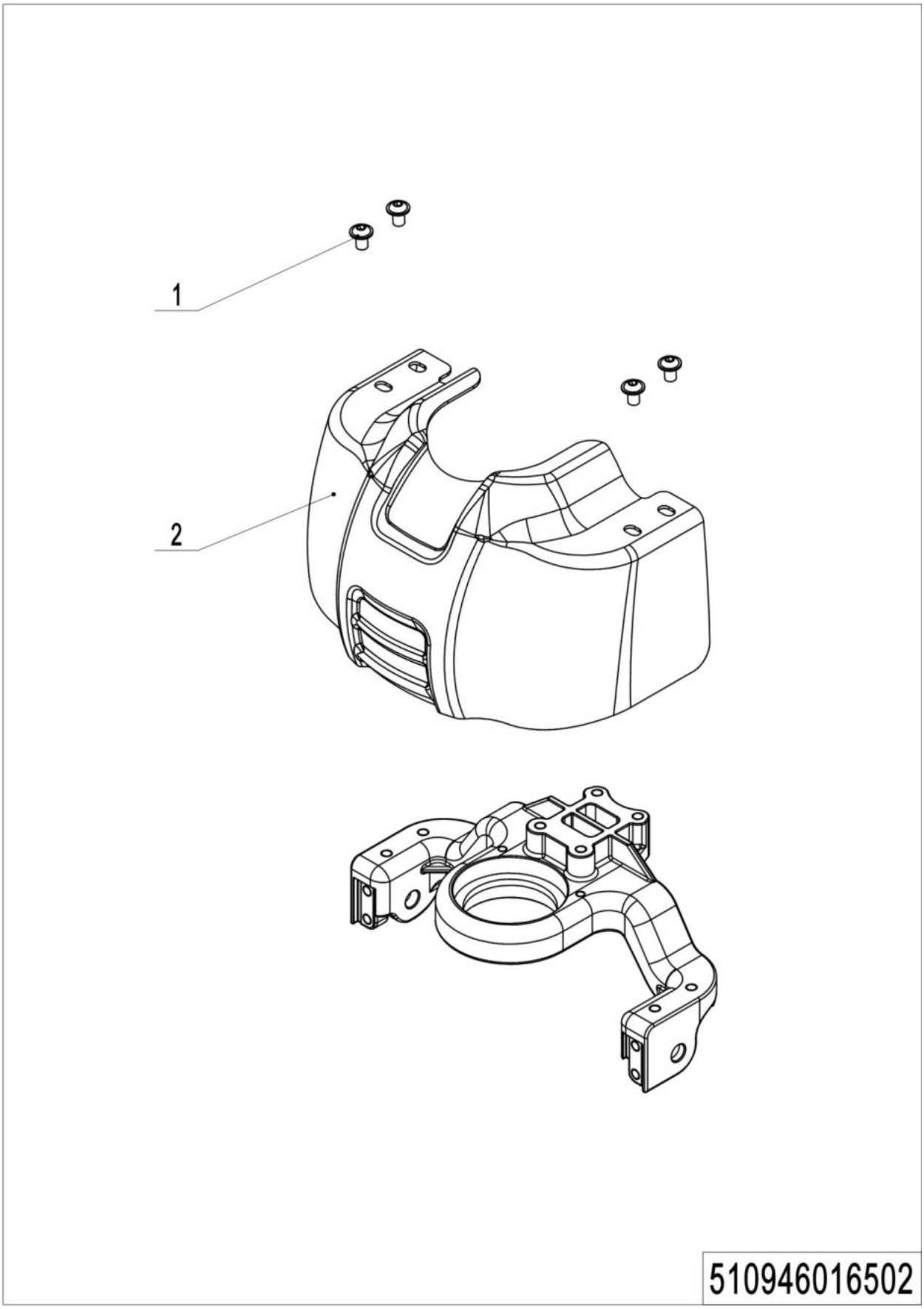

1= Supply as package. 2= Supply with constraints. 3= Phasing-out supply. 4= Supply as assembly. 5= Check other tables.

07 Caster (510946016502)

No.	Item Code	Mark	Item Description	Qty.	Substitute	Note
1	941100100005	1	Screw	4		
2	509916520000		Apron	1		

08 Caster (510946016501)

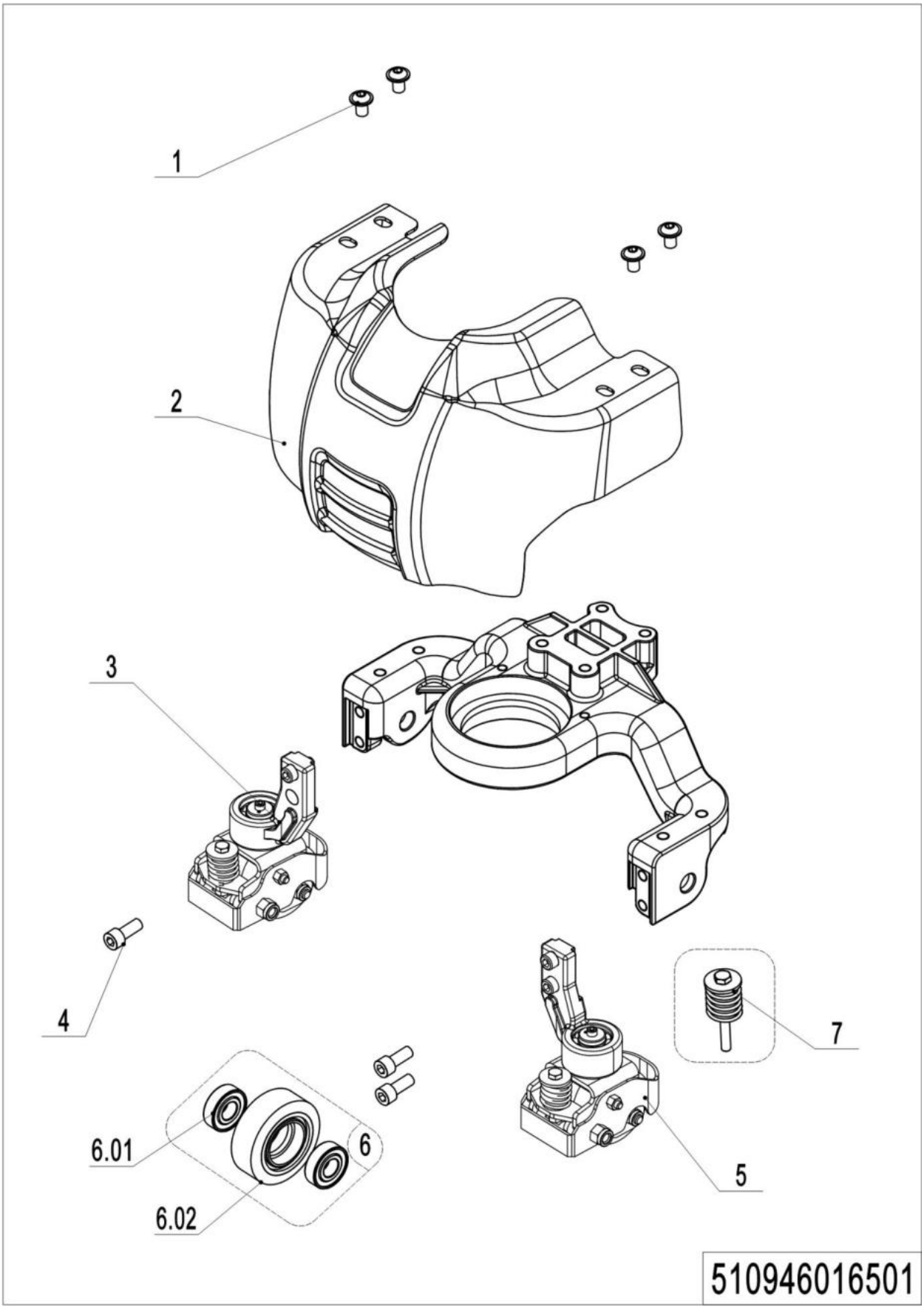

1= Supply as package. 2= Supply with constraints. 3= Phasing-out supply. 4= Supply as assembly. 5= Check other tables.

08 Caster (510946016501)

No.	Item Code	Mark	Item Description	Qty.	Substitute	Note
1	941100100005	1	Screw	4		
2	509916520001		Apron	1		
3	508016510002		Caster Assembly	1		
4	910200200076	1	Screw	4		
5	508016510005		Caster Assembly	1		
6	502398510015	2	Load Wheel Kit	2		
6.01	910700200018		Bearing	4		
6.02	940300300017		WheelΦ80x30	2		
7	508098510047		Spring Components	2		

Chapter 5: Electrical Parts

01 Wire Harness (510946033001)

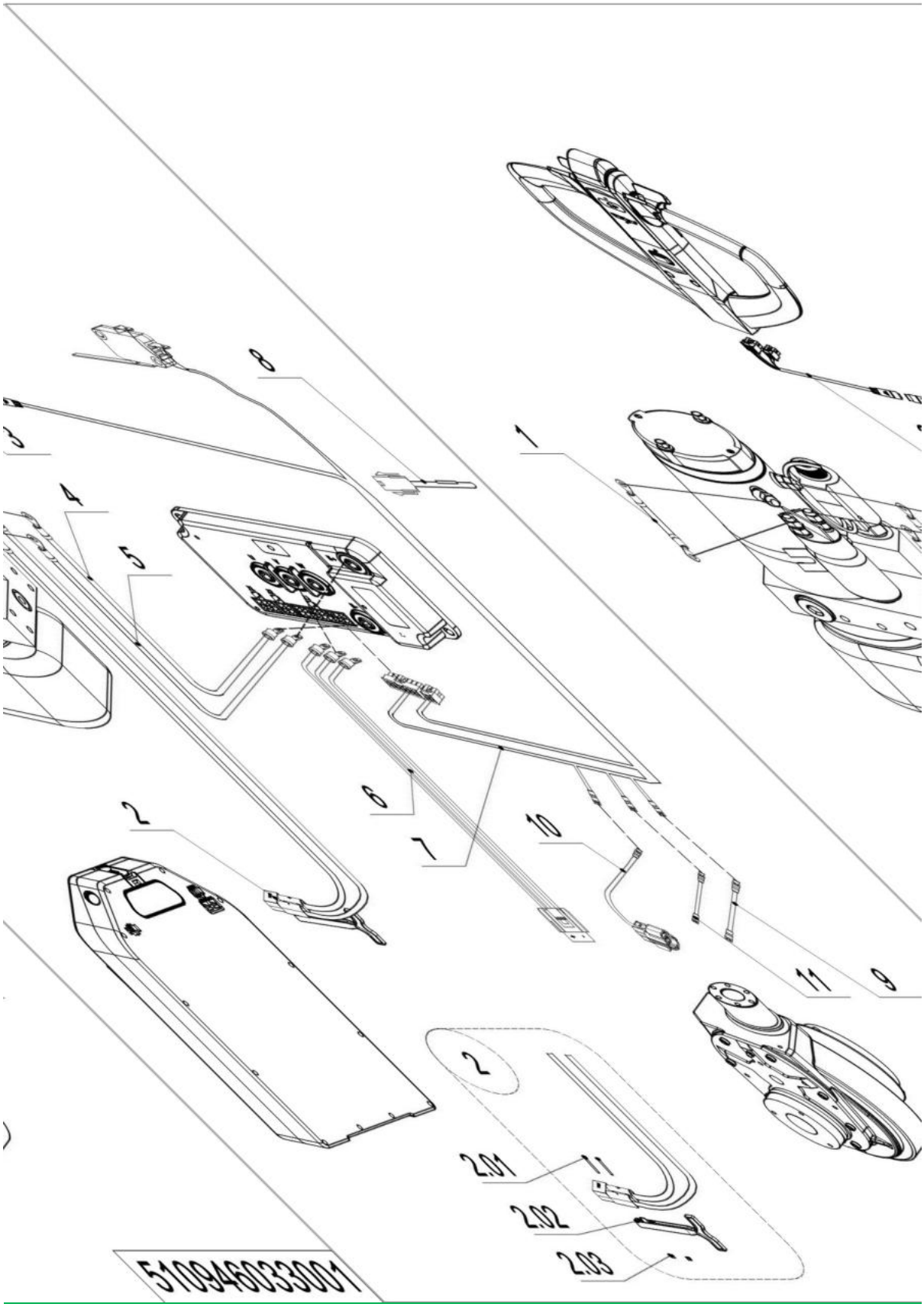

01 Wire Harness (510946033001)

No.	Item Code	Mark	Item Description	Qty.	Substitute	Note
1	508533010006		Wire Harness	1		
2	510933010002		Wire Harness	1		
3	509933010038		Wiring Harness	1		
4	509933010014		Cables	1		
5	509933010013		Cables	1		
6	509933010018		Wiring Harness	1		
7	510933010001		Wire Harness	1		
8	509933010028		Wire Harness	1		
9	921500100155		Cables	1		
10	509933010029		Wiring Harness	1		
11	921500100156		Cables	1		

02 Wire Harness (510946033002)

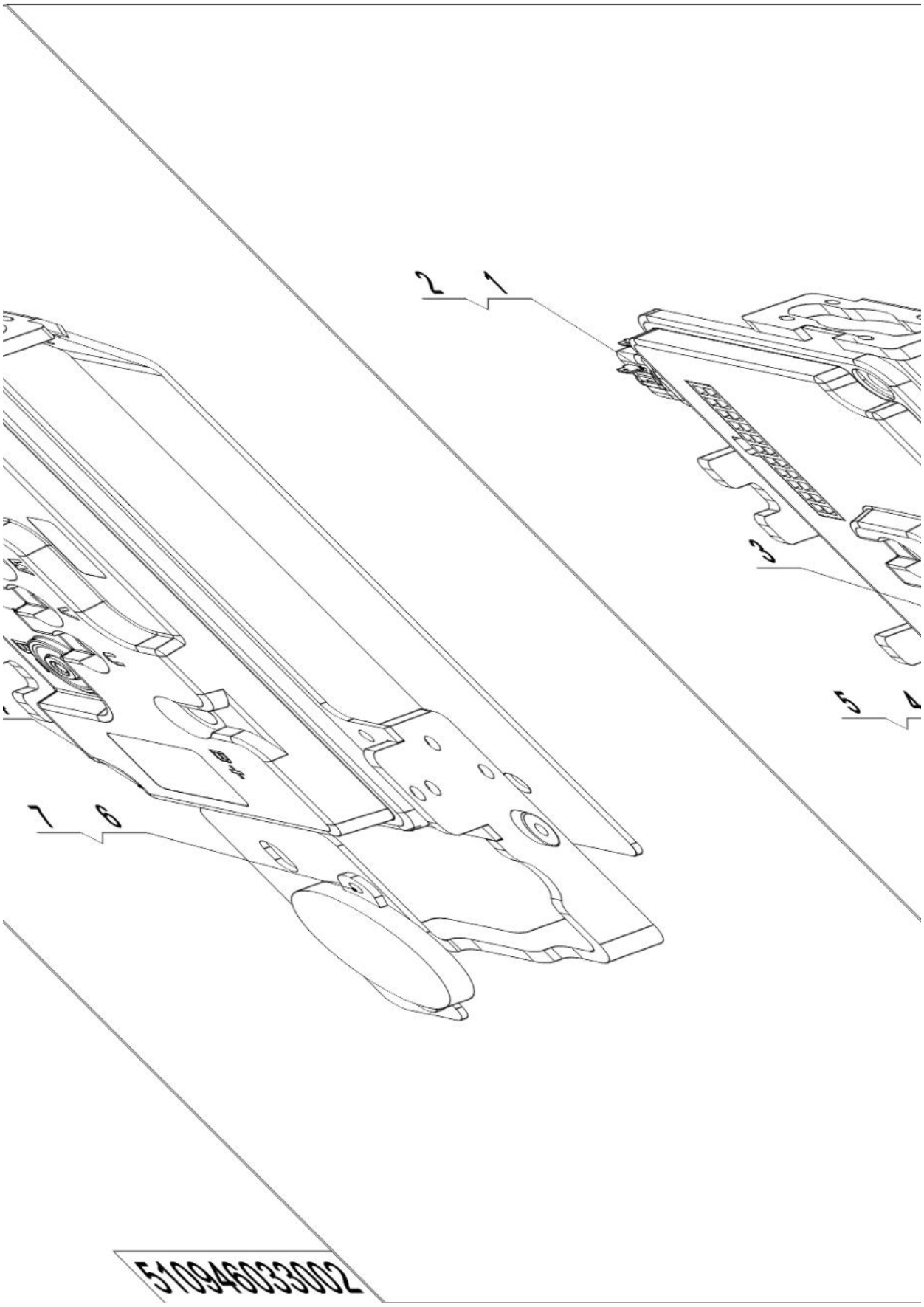

1= Supply as package. 2= Supply with constraints. 3= Phasing-out supply. 4= Supply as assembly. 5= Check other tables.

02 Controller (510946033002)

No.	Item Code	Mark	Item Description	Qty.	Substitute	Note
1	920200300012		Microswitch	1		
2	910200200004		Screw	2		
3	921400100130		Controller	1		
3	921400100248		Controller	1		AZ
4	910200200023		Screw	2		
5	910400500017		Spring Washer	2		
6	509998520063		Buzzer	1		
7	910200300002		Screw	2		

03 Charger (510946036501)

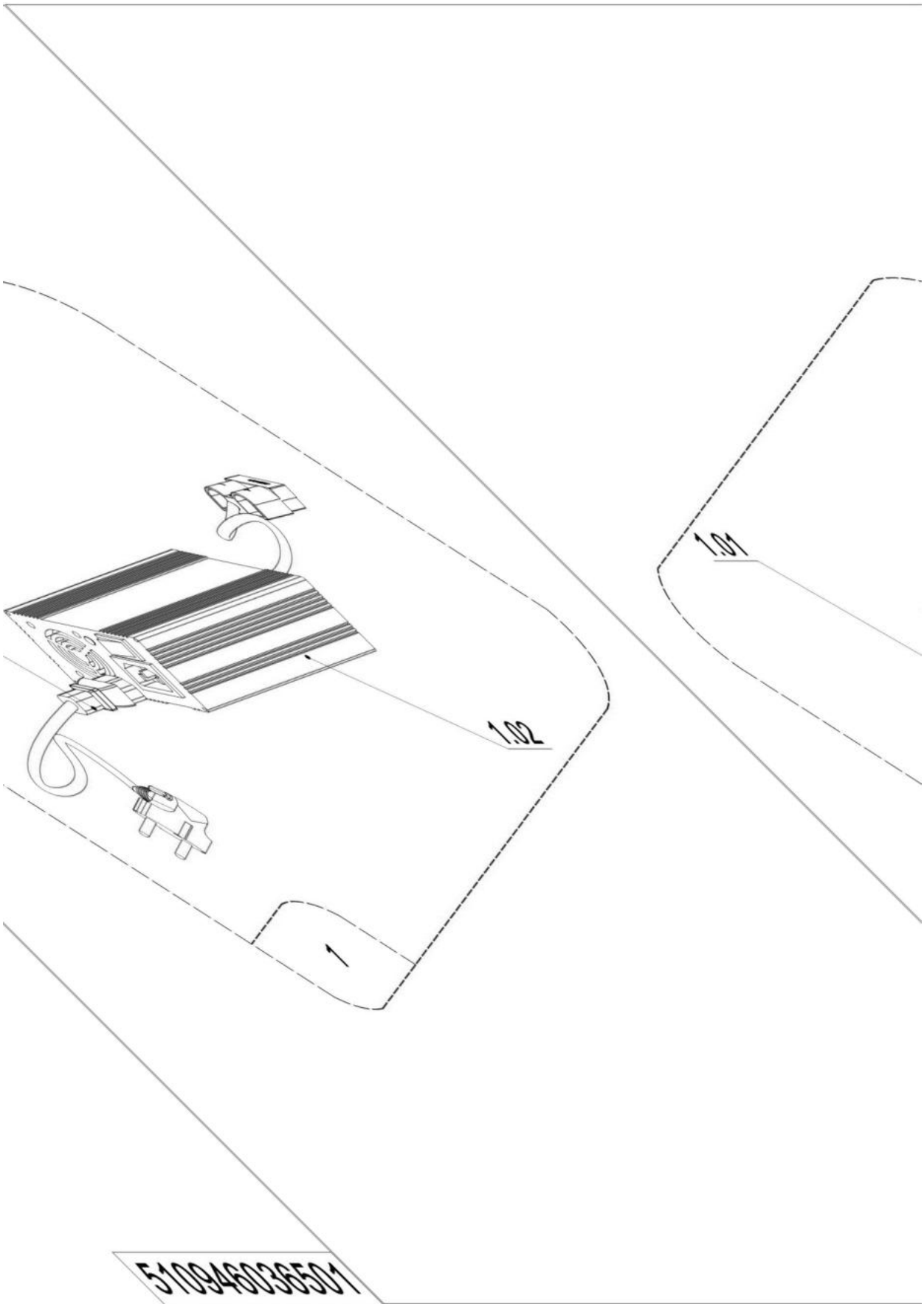

1= Supply as package. 2= Supply with constraints. 3= Phasing-out supply. 4= Supply as assembly. 5= Check other tables.

03 Charger (509946036501)

No.	Item Code	Mark	Item Description	Qty.	Substitute	Note
1	510936510001		Charger48V9A(Asia)	1		
1.01	921500200021		Power Cord（Asia）	1		
1.02	921000200797		Charger48V9A(Asia)	1		SS

04 Traction Battery (510946037001)

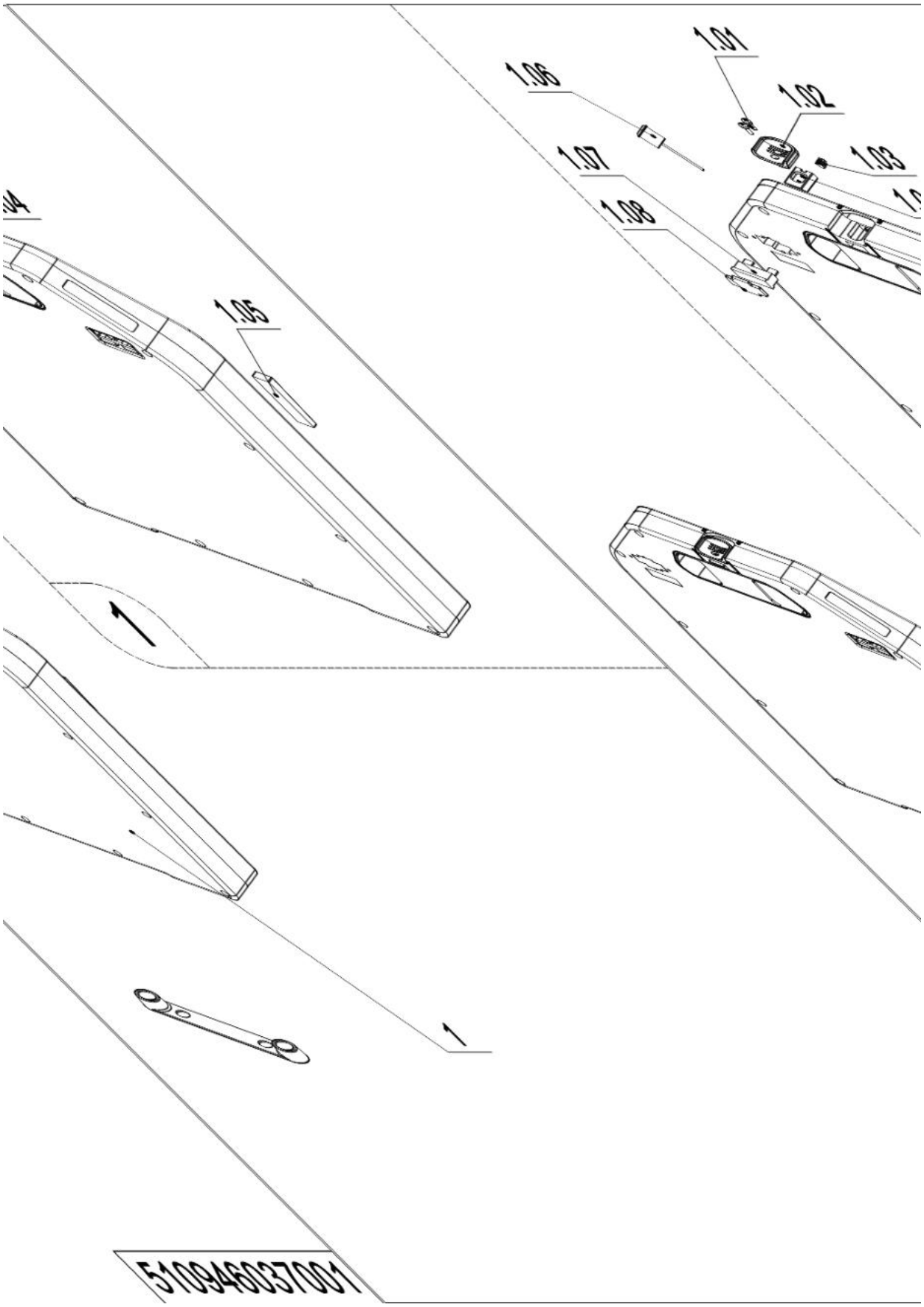

04 Traction Battery (510946037003)

No.	Item Code	Mark	Item Description	Qty.	Substitute	Note
1	510937010001		Li Battery48V20Ah	1		XNL
1.01	910200500011	1	Screw	2		
1.02	508098520022	2	Plastic Handle	1		
1.03	508098520024	2	Spring	1		
1.04	508098520023	2	Fixing Mount	1		
1.05	509998520000		Stop Block	2		
1.06	509998520100	2	Wire Harness	1		
1.07	920100200007		Fuse	1		
1.08	508098520021		waterproof plug	1		

Chapter 6: Special equipment

01 Tiller Unit（**Pedal-specific**）**(510846011011)**

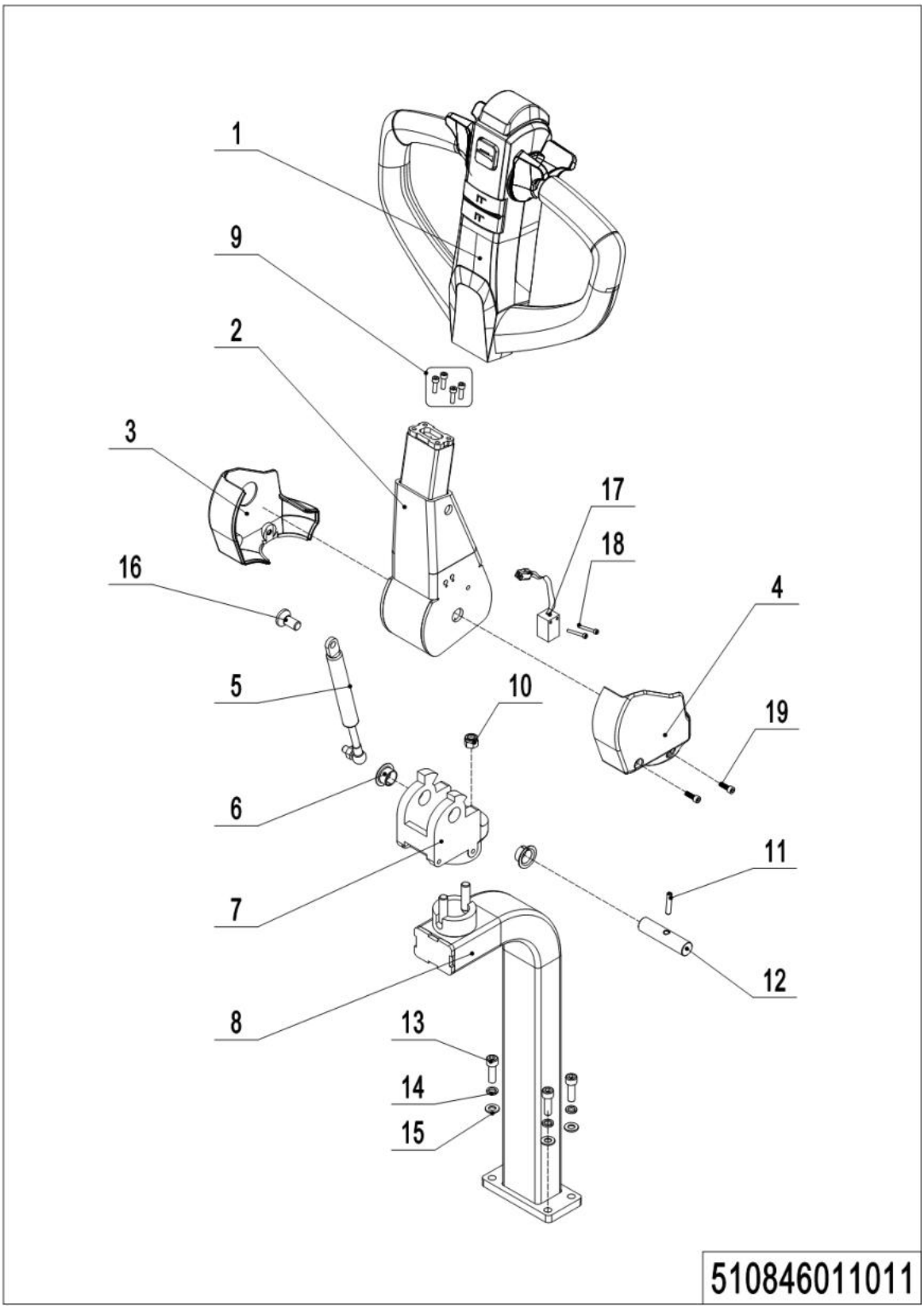

01 Tiller Unit（Pedal-specific）(510846011011)

序号	物料编码	Mark	物料名称	数量	替代零件号	说明
1	922100100088		Handle Cap Kit	1		手柄 NL19A
2	537311010000		The handle head is welded	1		
3	535911020005		Protective cover	1		
4	535911020006		Protective cover	1		
5	940400100045		Gas springs	1		
6	940500200002		Composite sleeve	2		
7	535911020009		Handle holder	1		
8	510811010001		The handle head is welded	1		
9	910200200036		screw	4		
10	910300500005		nut	2		
11	910600400013		Cylindrical pins	1		
12	505611020008		Rotating shaft	1		
13	910200200058		screw	4		
14	910400500006		Spring washers	4		
15	910400100021		Flat pads	4		
16	910200200057		screw	1		
17	920200400027		Proximity switches	1		
18	941101100001		screw	2		
19	910200300016		screw	4		

02 Pedal(510846018001)

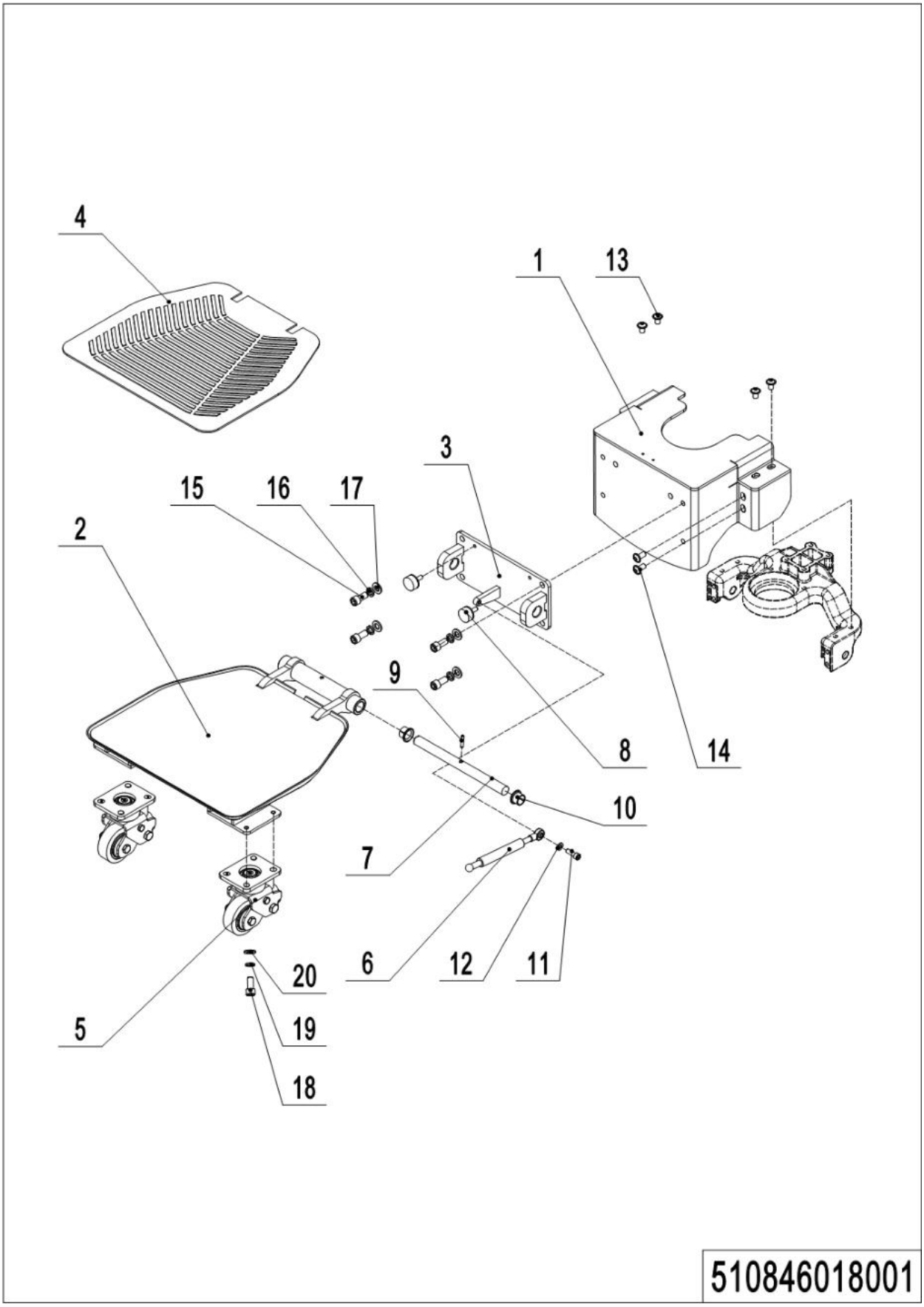

02 Pedal(510846018001)

序号	物料编码	Mark	物料名称	数量	替代零件号	说明
1	510818010002		Coaming welding	1		
2	510818010001		Pedal welding	1		
3	510818010000		Mounts	1		
4	535918020019		Pedal pads	1		
5	510816501001		Balance wheels	2		
6	940400100039		Gas springs	1		
7	535918020014		Gas springs	1		
8	505618020016		Cushions	2		
9	910600400040		Cushions	1		
10	940500200008		Composite sleeve	2		
11	910200200058		screw	1		
12	910400100006		Flat pads	1		
13	941100100005		screw	4		
14	941100100007		screw	4		
15	910200200097		screw	4		
16	910400500008		Spring pads	4		
17	910400100008		Flat pads	4		
18	910200200076		screw	8		
19	910400500007		Spring pads	8		
20	910400100007		Flat pads	8		

Chapter 7: Others

01 Labels and Decals-EU (510946047002)

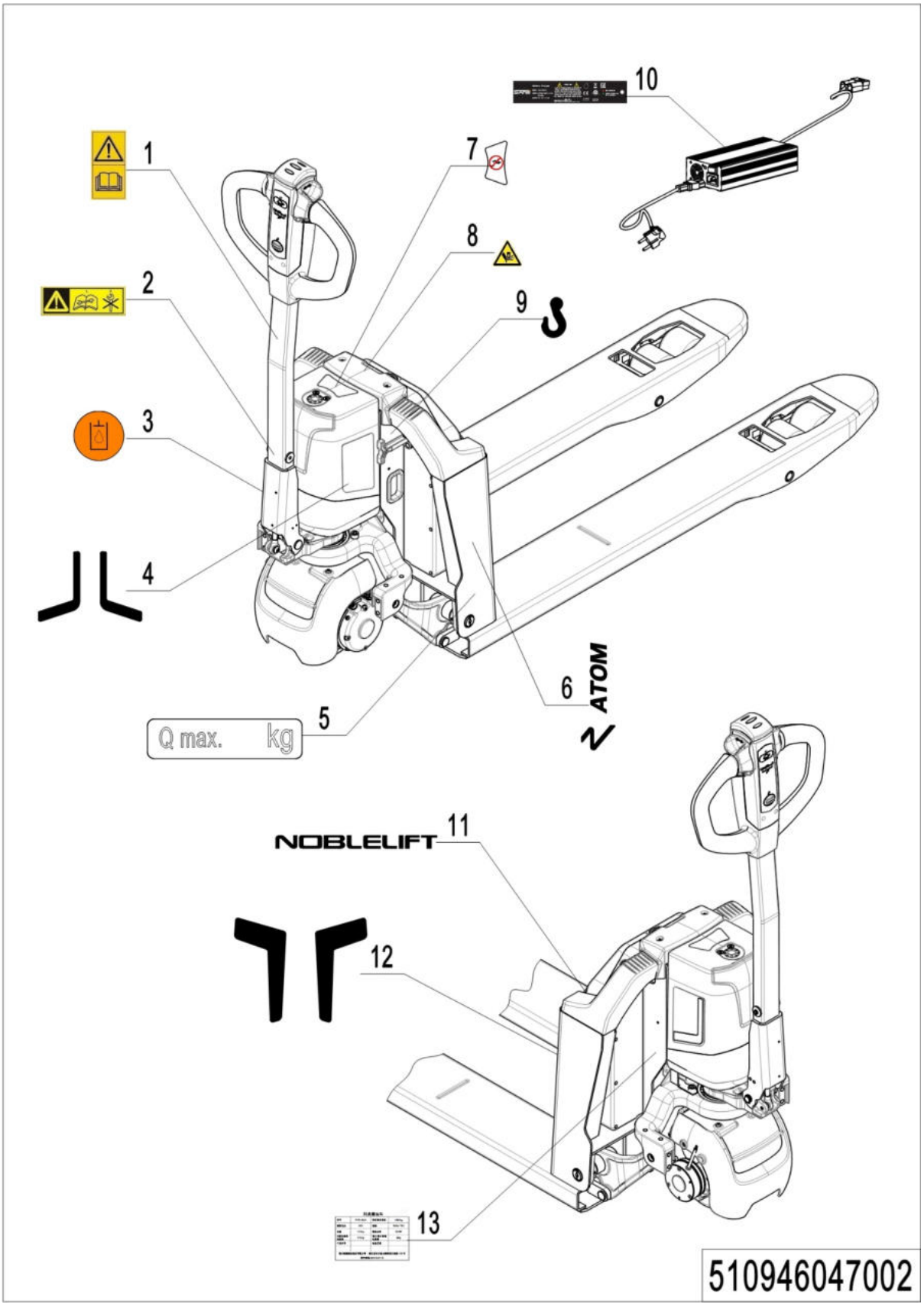

01 Labels and Decals-EU (510946047002)

No.	Item Code	Mark	Item Description	Qty.	Substitute	Note
1	941200300002		Label	1		
2	508047020004		Label	1		
3	941200300003		Label	1		
4	510847020001		Label	1		
5	941200200009		Label	1		
6	510847020004		Label(ATOM+N)	2		
7	510847020005		Label	1		
8	508047020007		Label	1		
9	941200300001		Label	2		
10	509947020005		Label	1		
11	510847020002		Label	1		
12	510847020000		Label	1		
13	510847520001		Identification Plate	1		

02 Labels and Decals-US (510946047004)

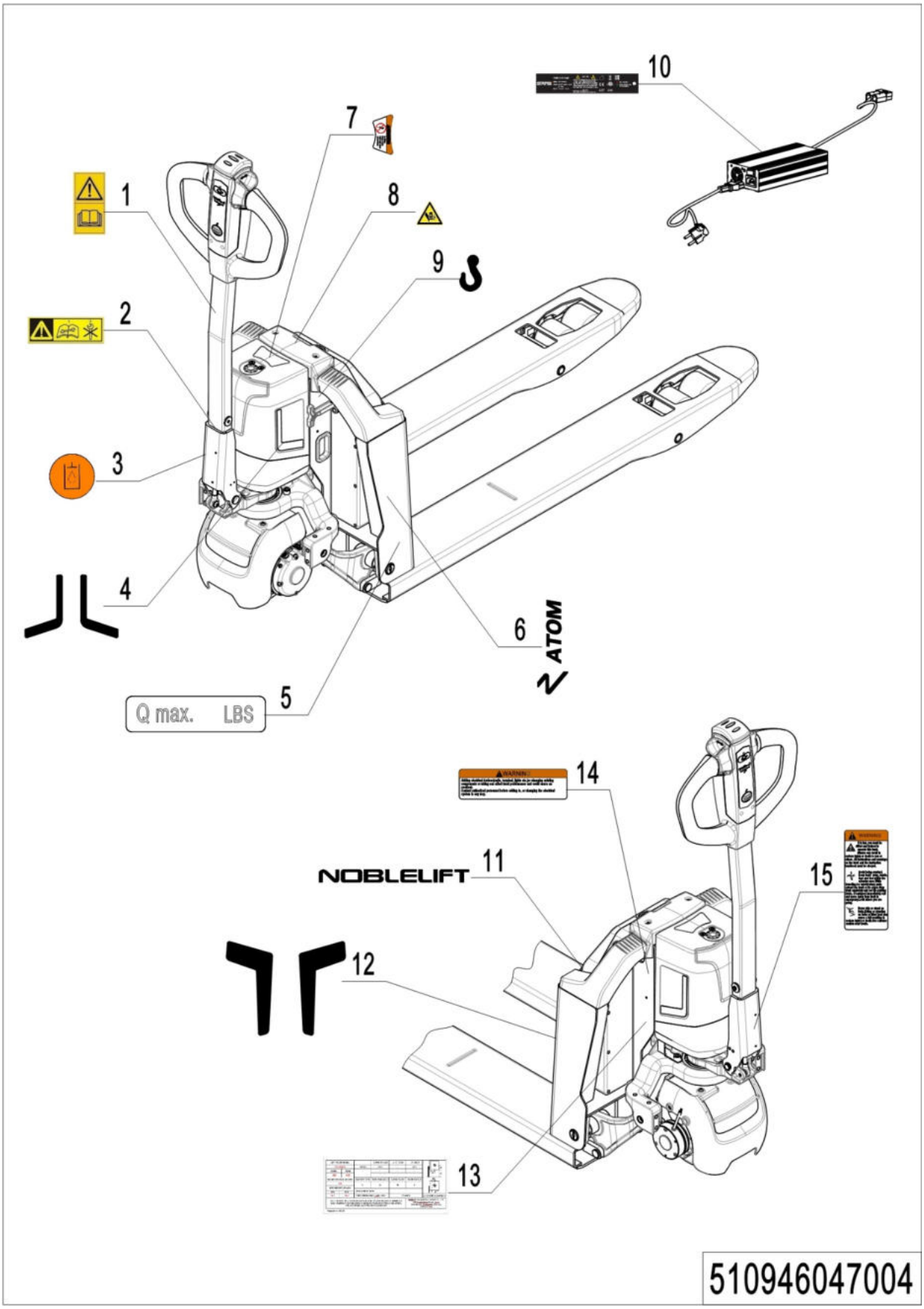

1= Supply as package. 2= Supply with constraints. 3= Phasing-out supply. 4= Supply as assembly. 5= Check other tables.

02 Labels and Decals-US (510946047004)

No.	Item Code	Mark	Item Description	Qty.	Substitute	Note
1	941200300002		Label	1		
2	508047020004		Label	1		
3	941200300003		Label	1		
4	510847020001		Label	1		
5	941200200009		Label	1		
6	510847020004		Label(ATOM+N)	2		
7	510847020007		Label(US)	1		
8	508047020007		Label	1		
9	941200300001		Label	2		
10	509947020005		Label	1		
11	510847020002		Label	1		
12	510847020000		Label	1		
13	510847520002		Identification Plate(US)	1		
14	941200100010		Label	1		
15	941200100009		Label	1		

Appendix

01 Electrical Circuit Diagram (510946045501)

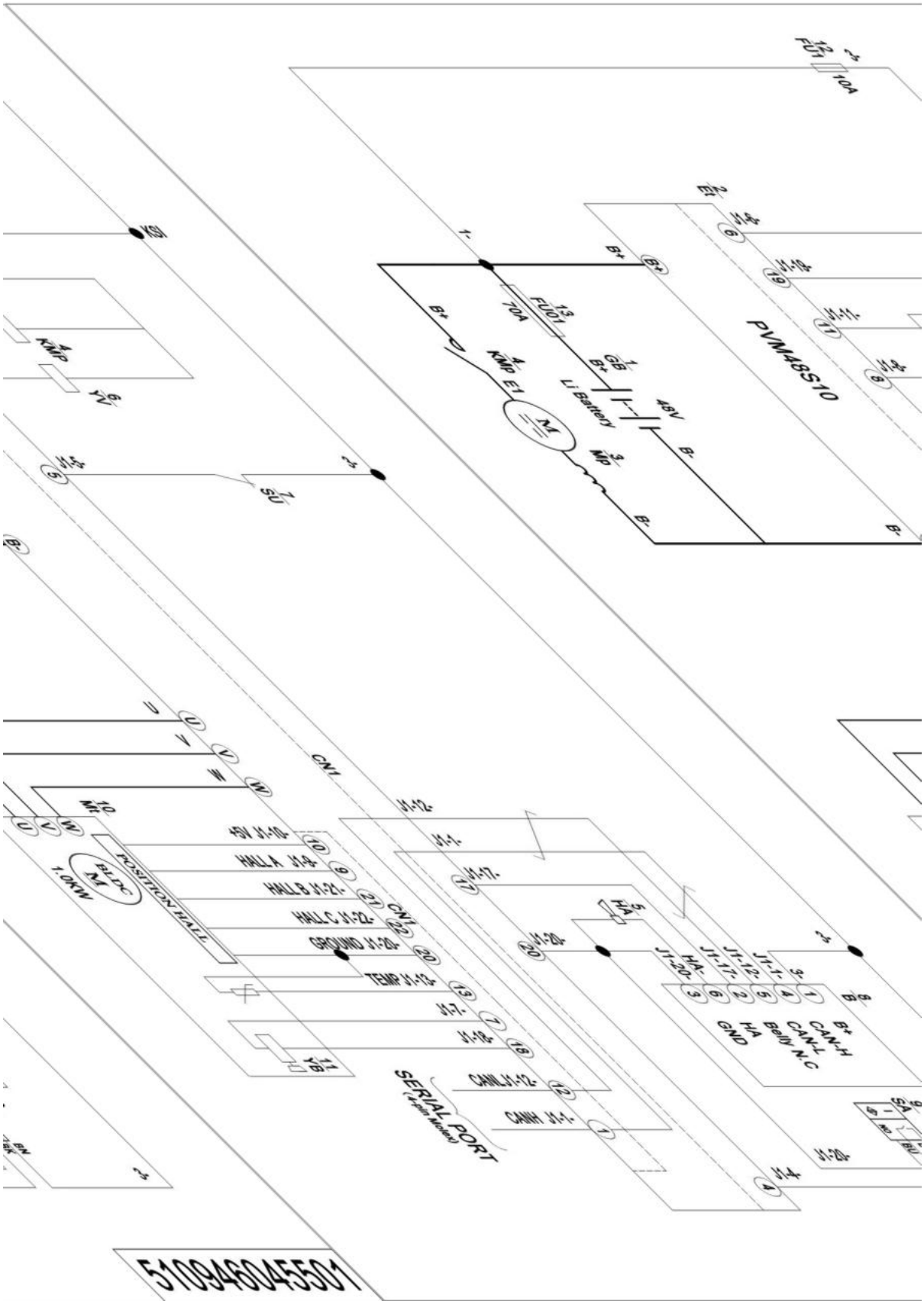

02 Electrical Circuit Diagram (510946045502)

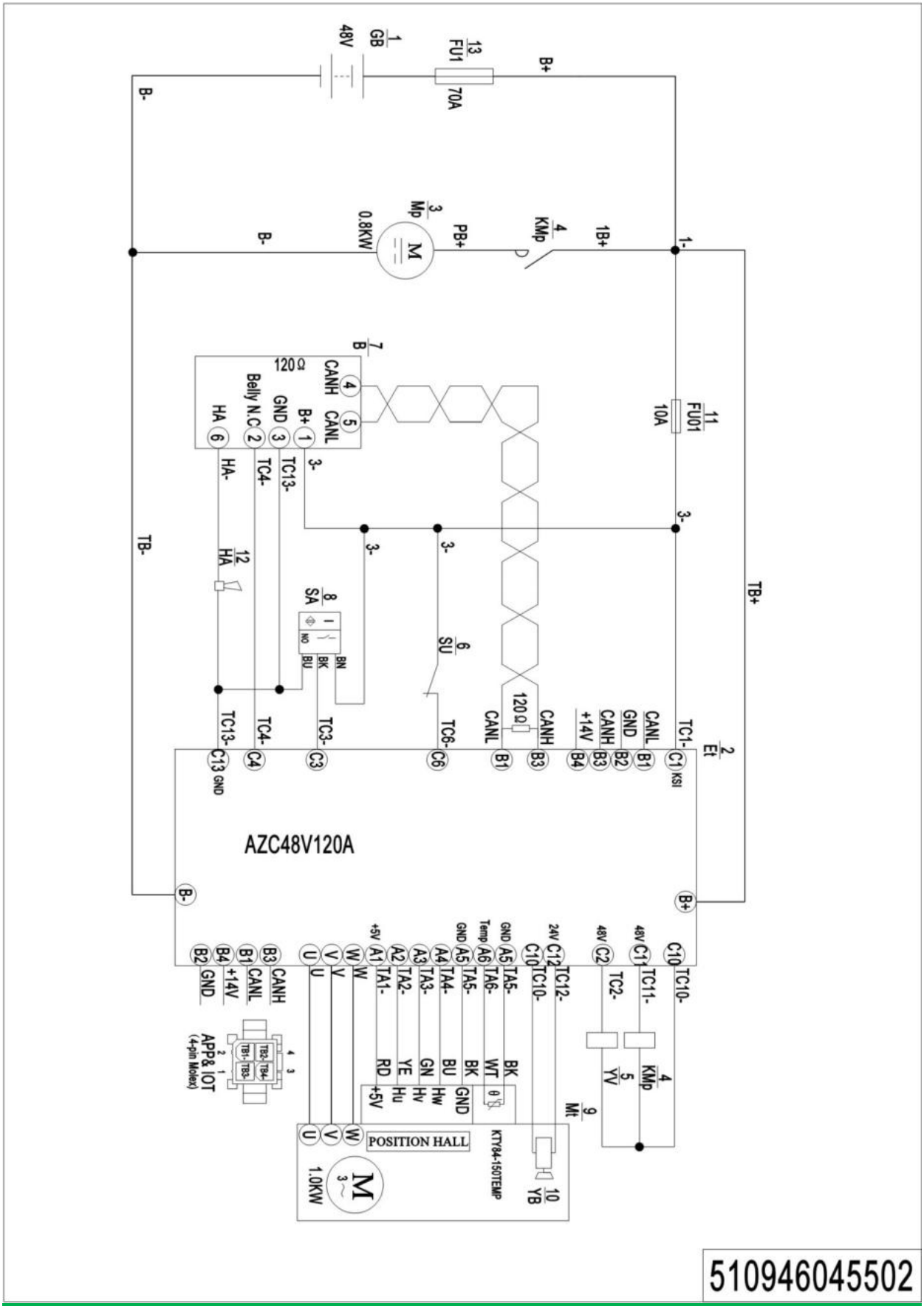

03 Hydraulic Circuit Diagram (508046045502)

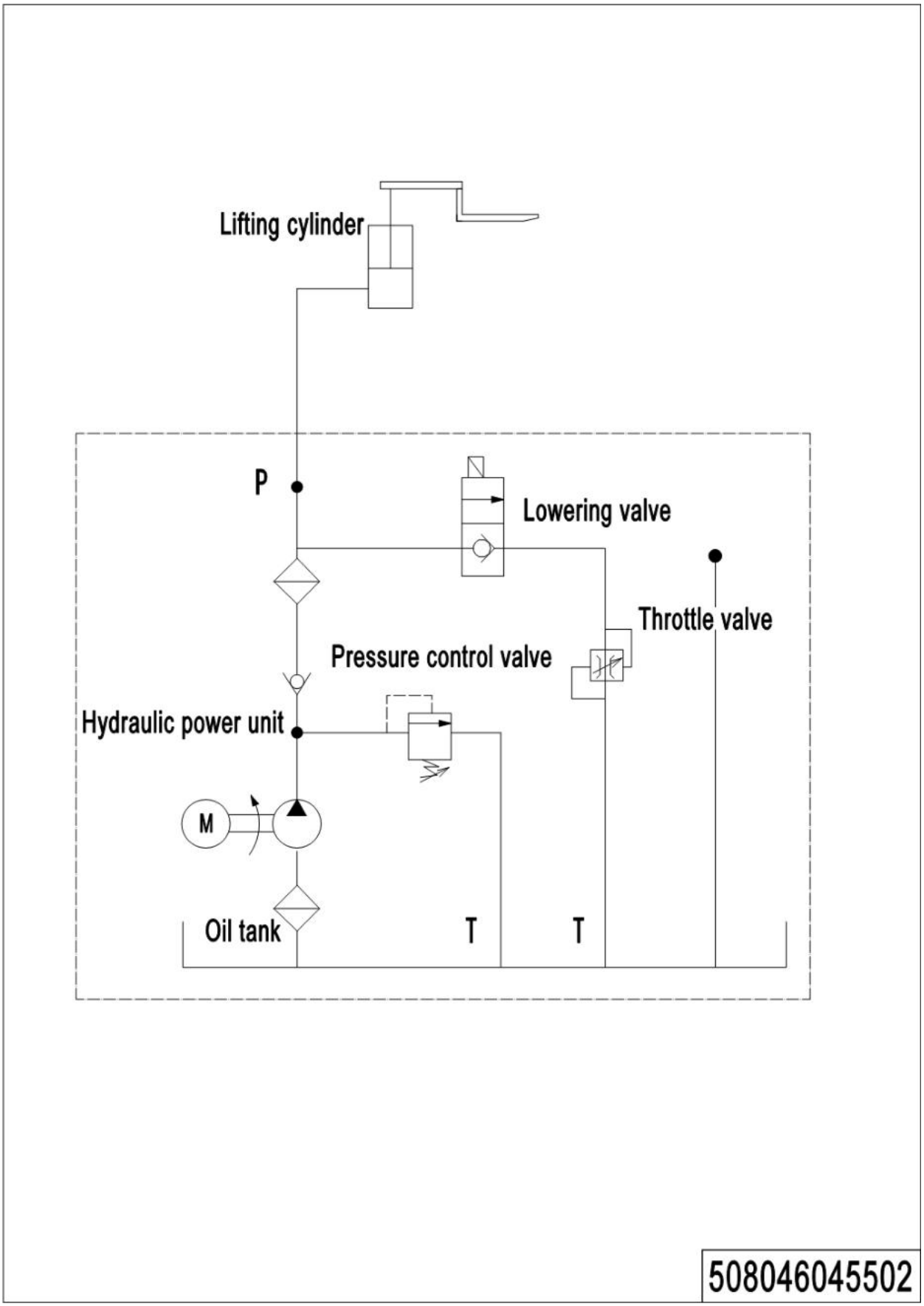

04 Consumable Parts List

No.	Item Code	Item Description	Qty.	Chapter/ Section/ Number
1	910700200058	Bearing	1	Chapter 1/01/4
2	910700600044	Bearing	1	Chapter 1/01/8
3	961001300010	Wheel	1	Chapter 1/02/9
4	910700200044	Bearing	2	Chapter 1/02/10
5	910700200057	Bearing	1	Chapter 1/02/22
6	910700200046	Bearing	1	Chapter 1/02/24
7	509924010005	Seal Kit	1	Chapter 2/01/10.01
8	508598510004	Seal Kit	1	Chapter 2/01/10.03
9	940500100097	Bushing	2	Chapter 3/01/17 Chapter 3/02/17
10	940500100083	Bushing	8	Chapter 3/01/15 Chapter 3/02/15
11	940500200001	Bushing	2	Chapter 4/01/06
12	508011010001	Gas Spring	1	Chapter 4/01/10.3
13	940500200038	Bushing	4	Chapter 4/04/1.01
14	910700200019	Bearing	8/4	Chapter 4/04/1.04
15	940300300047	WheelΦ80x70	4	Chapter 4/04/1.05
16	940500100088	Bushing	4	Chapter 4/04/1.09
17	940300300023	WheelΦ80x93	2	Chapter 4/04/2.01
18	910700200018	Bearing	4	Chapter 4/06/4.01 Chapter 4/08/6.01
19	940300300017	WheelΦ80x30	2	Chapter 4/06/4.02 Chapter 4/08/6.02
20	920100200007	Fuse	1	Chapter 5/04/1.07

1= Supply as package. 2= Supply with constraints. 3= Phasing-out supply. 4= Supply as assembly. 5= Check other tables.