NOBLELIFT

Scan QR Code for More

Service Hotline: 836115

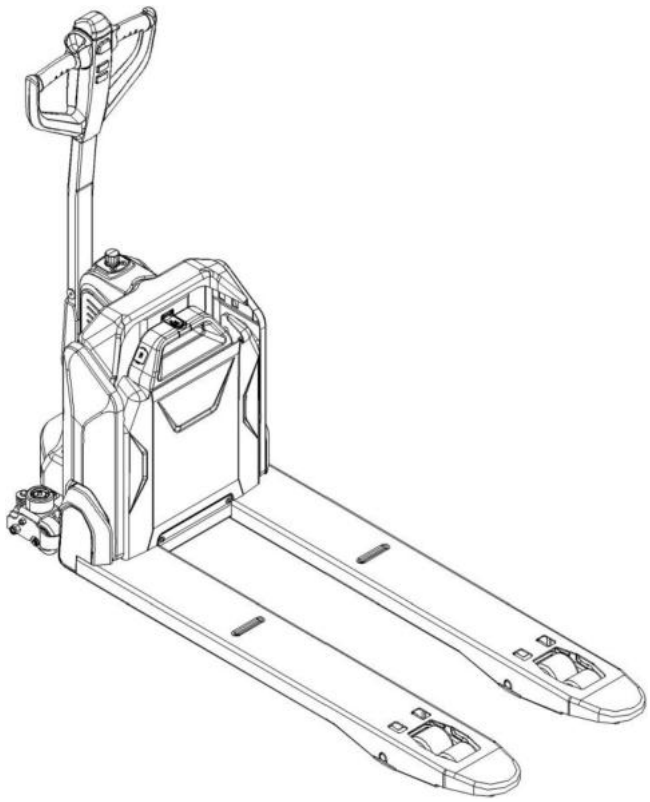

Electric Pallet Truck PTE20N

PARTS MANUAL

508546020101

Version：V07

Truck Identification Number From：

Parts Manual PTE20N-PM07EN

Please order spare parts from authorized dealers of Noblelift Intelligent Equipment Co., LTD.

In order to avoid wrong delivery, all the orders for spare parts should specify the following items:

- Truck model, identification number and manufacture year.
- Orders for spare parts of mast, hydraulic transmission unit, steering axle, motor, etc. shall indicate the manufacture number of these parts.
- Codes for Noblelift spare parts are shown in the table of parts manual. Please also pay attention to the description of supply status, order quantity, etc. (check the number listed in "Mark" column of the parts manual).

"Mark" Column:

The unmarked indicates the parts are in short supply cycle.

Number 1: supply as package. Indicating these that parts are small parts and seal parts, which are supplied in package unit and in short supply cycle.

Number 2: supply with constraints. Indicating that these spare parts are not in stock and will be prepared for production after receiving the order from customers, which are in long supply cycle.

Number 3: phasing-out supply. Indicating that these parts will be replaced by new parts due to technical improvements and the current stock will not be available when these parts run out. Please check the description of technical improvements notice.

Number 4: supply as assembly. Indicating that these parts are assembly parts defined by manufacture process, which cannot be supplied as a single part.

Number 5: check other tables.

This parts manual is the property of Noblelift and can be shared under the confidential agreement only, Noblelift has the right to claim for compensation of any unauthorized use. Copy without permission is not allowed. Figures in the manual are not limited by the original design. Noblelift Intelligent Equipment Co., LTD reserves the right to improve the products for continuous technology progress.

Table of Contents

Chapter 1: Drive System....4
01 Drive Unit Steering(508546013501)....4
01 Drive Unit Steering(508546013501)....6
02 Drive Assembly (ZD) (508546013001)....8
03 Drive Assembly (YX) (508546013002)....10
Chapter 2: Hydraulic System....12
01 Hydraulic Components(508546024001)....12
02 Pump Components(508546024002)....14
03 Hydraulic Connection Parts(508546024003)....16
Chapter 3: Truck Frame....18
01 Truck Frame (508546038501)....18
01 Truck Frame (508546038501) Continuation....20
02 Truck Frame (508546038502)....22
02 Truck Frame (508546038502) Continuation....24
03 Covers and Panels(508546038503)....26
Chapter 4: Steering System, Braking System, Wheels....28
01 Tiller Unit(508546011001)....28
02 Control Handle(DT) (508546011002)....30
03 Control Handle (EN1175-2020)(508546011003)....32
04 Control Handle(SJ) (508546011004)....34
05 Control Handle(SJ, IC card) (508546011005)....36
06 Load Wheel (508546017001)....38
07 Caster(508546016501)....40
08 Caster(without)（508546016502）....42
Chapter 5: Electrical Parts....44
01 Wire Harness (508546033001)....44
02 Wire Harness (EN1175-2020)(508546033003)....46
03 Controller (508546033002)....48
04 Controller(EN1175-2020) (508546033004)....50
05 Charger (508546036501)....52
05 Charger (508546036501) Continuation....54
06 Traction Battery (508546037001)....56
Chapter 6: Special Parts....58
01 Load Backrest(508546040501)....58
Chapter 7: Others....60
01 Labels and Decals-EU(508546047001)....60
02 Labels and Decals-US (508546047002)....62
Appendix....64
01 Electrical Circuit Diagram(508546045501)....64
02 Electrical Circuit Diagram (EN1175-2020)(508546045502)....65
03 Hydraulic Circuit Diagram(508046045502)....66
04 Consumable Parts List(508546045502)....67

Chapter 1: Drive System

01 Drive Unit Steering(508546013501)

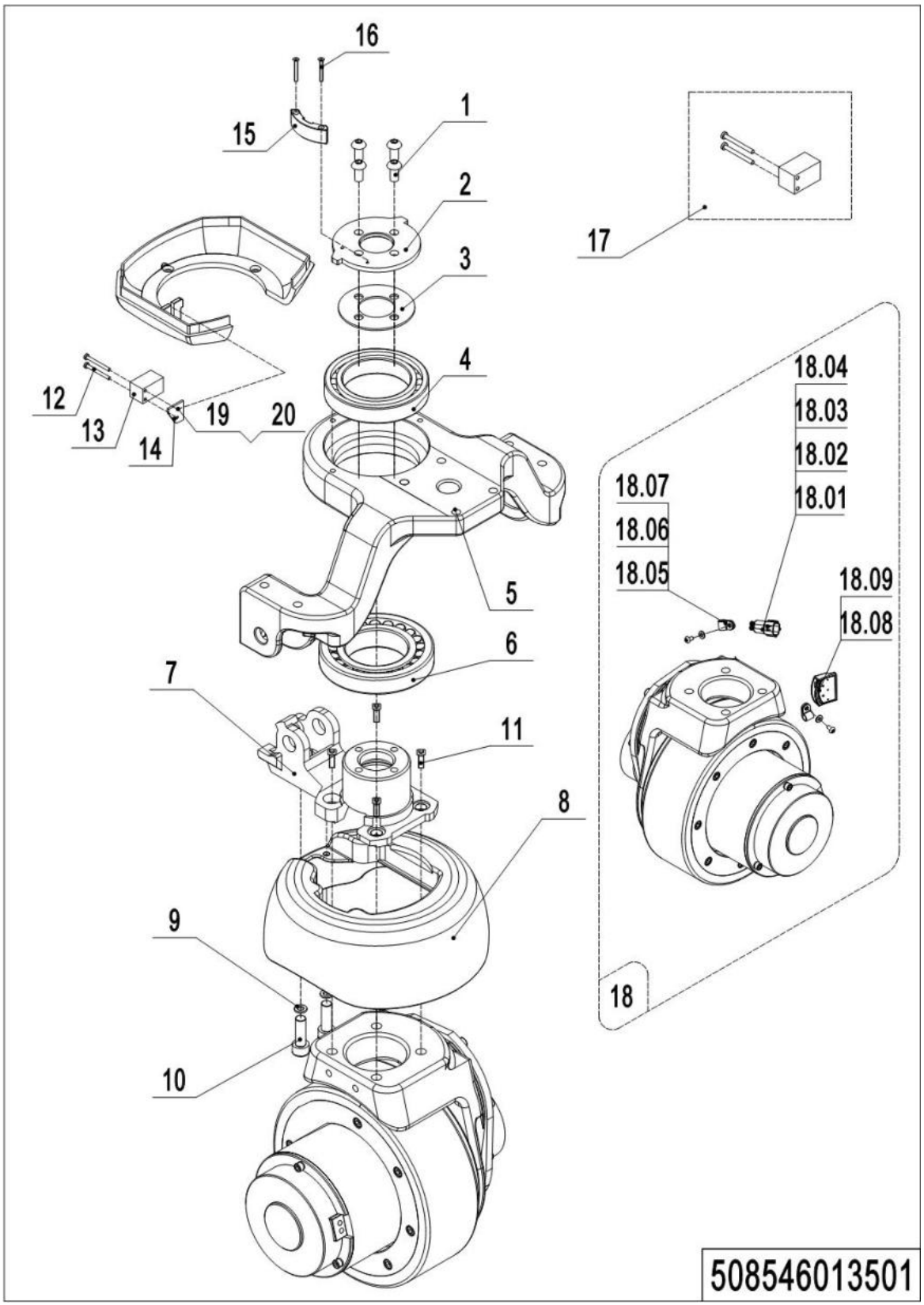

01 Drive Unit Steering (508546013501)

No.	Item Code	Mark	Item Description	Qty.	Substitute	Note
1	910200300024	1	Screw	4		
2	508513520002		Bearing Plate	1		
3	508013520004		Subplate	1		
4	910700200058		Bearing	1		
5	508513520001		Wheel Mount	1		
6	910700600044		Bearing	1		
7	508513520000		Flange	1		
8	508013520101		Cover	1		
9	910400100005	1	Flat Washer	4		
10	910200200032	1	Screw	2		
11	910200200076	1	Screw	4		
12	910200200007	1	Screw	2		
13	920200400025		Proximity Switch	1		
14	508533020001		Mounting Plate	1		
15	508533020000		Induction Block	1		
16	910200500015	1	Screw	2		
17	508598510002		Proximity Switch	1		
18	508598510003		Drive Unit(INTORQ)	1		ZD
18	508598510017		Drive Unit(XDL)	1		ZD
18	508598510025		Drive Unit(XDL)	1		ZD
18	508513510000		Drive Unit (STEKI)	1		YX
18	508513510001		Drive Unit (STEKI)	1		YX, Non-slip
18.01	920400200003		Connector	1		
18.02	920400200017		Connector	2		
18.03	920400200018		Connector	2		
18.04	920400200004		Connector	1		
18.05	921300200001		Cable Clamp	2		
18.06	910200200012	1	Screw	2		
18.07	910400100003	1	Flat Washer	2		
18.08	920400200160		Connector	1		
18.09	920400200161		Connector	1		

1= Supply as package. 2= Supply with constraints. 3= Phasing-out supply. 4= Supply as assembly. 5= Check other tables.

01 Drive Unit Steering(508546013501) Continuation

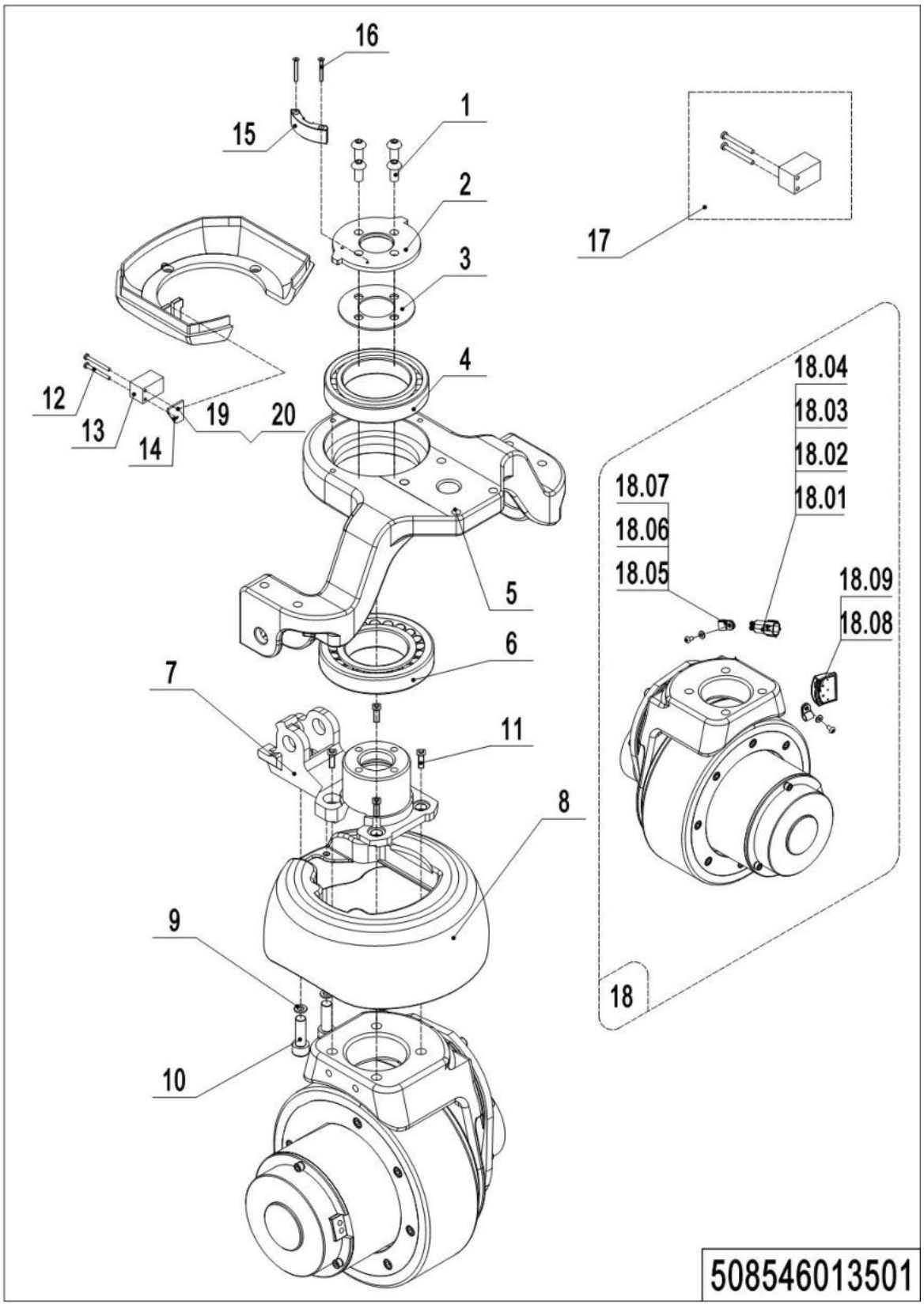

01 Drive Unit Steering (508546013501) Continuation

No.	Item Code	Mark	Item Description	Qty.	Substitute	Note
19	910400100003	1	Flat Washer	1		
20	910200300005	1	Screw	1		

1= Supply as package. 2= Supply with constraints. 3= Phasing-out supply. 4= Supply as assembly. 5= Check other tables.

02 Drive Assembly (ZD) (508546013001)

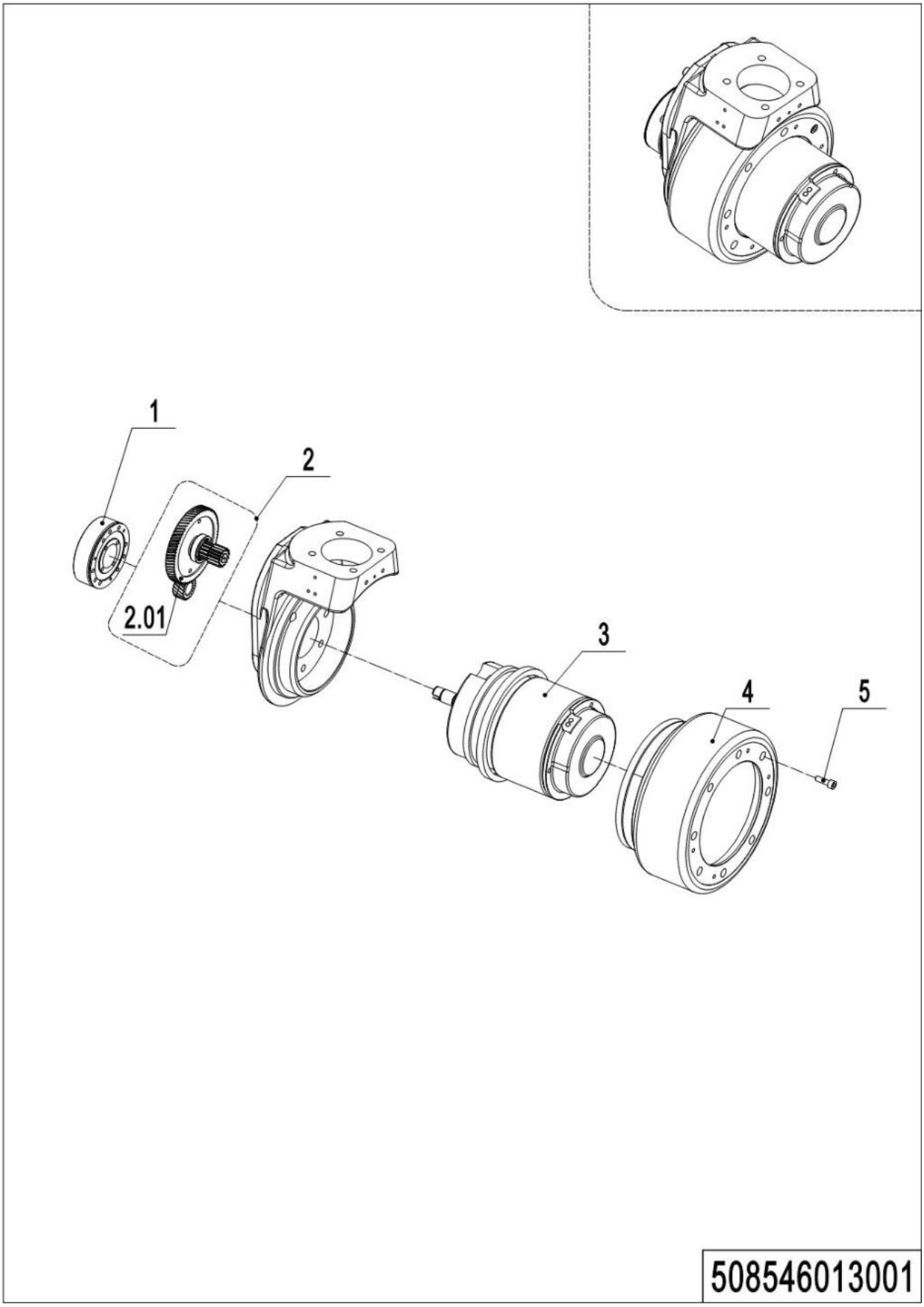

1= Supply as package. 2= Supply with constraints. 3= Phasing-out supply. 4= Supply as assembly. 5= Check other tables.

02 Drive Assembly (ZD) (508546013001)

No.	Item Code	Mark	Item Description	Qty.	Substitute	Note
1	508533010010		Brake	1		INTORQ
1	509998510026		Brake	1		XDL
1	508598510048		Brake	1		STEKI
2	508098510015		Gear Components	1		
2.01	508098520004		Gear	1		
3	508598510012		Motor	1		
4	508098520003		Wheel	1		
4	508098520026		Wheel	1		Anti-skid
5	910200200167	1	Screw Kits	8		

1= Supply as package. 2= Supply with constraints. 3= Phasing-out supply. 4= Supply as assembly. 5= Check other tables.

03 Drive Assembly (YX) (508546013002)

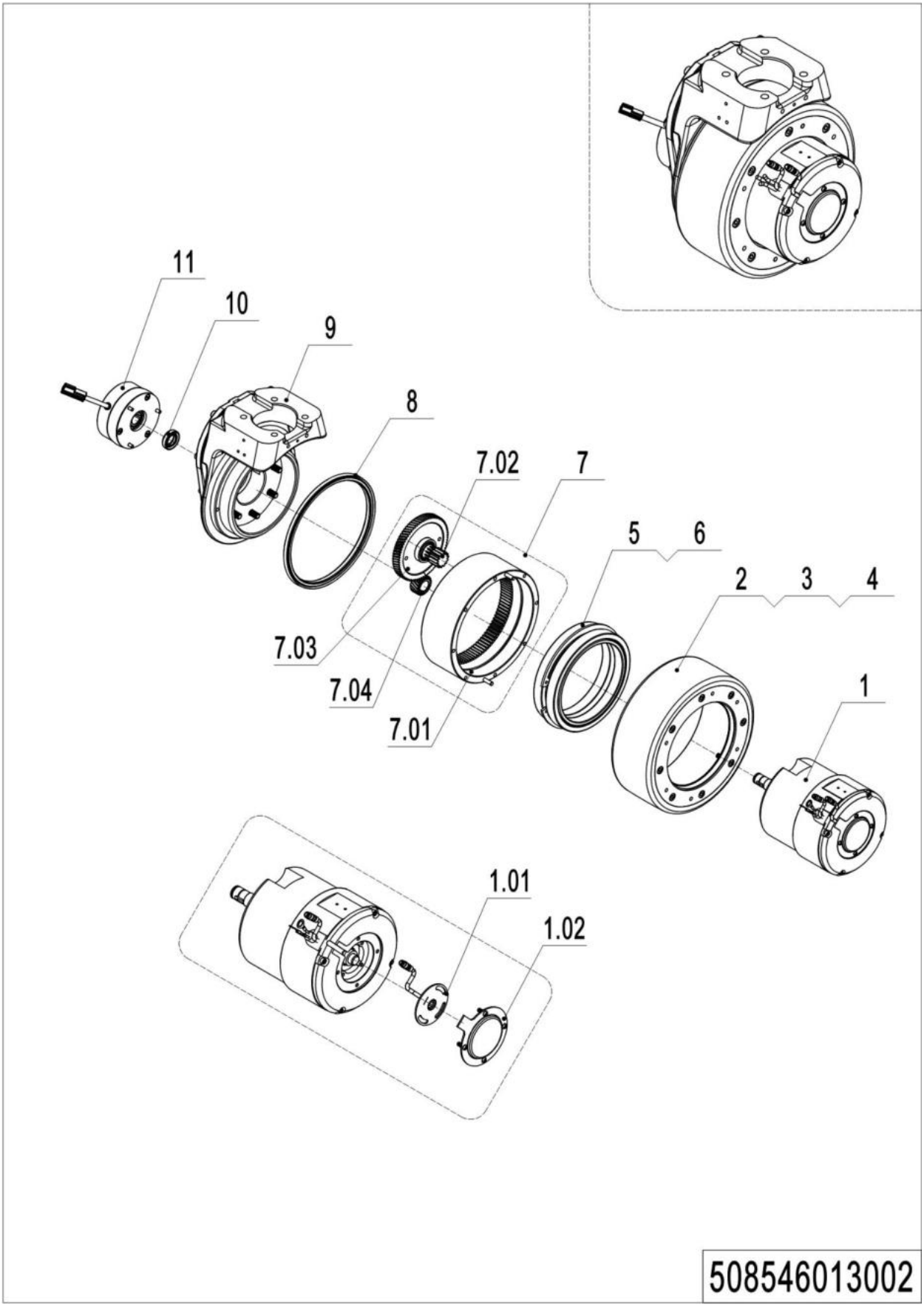

1= Supply as package. 2= Supply with constraints. 3= Phasing-out supply. 4= Supply as assembly. 5= Check other tables.

03 Drive Assembly (YX) (508546013002)

No.	Item Code	Mark	Item Description	Qty.	Substitute	Note
1	508098510161		Motor	1		
1.01	961001800002		Sensor	1		
1.02	961001800003		Protective cover	1		
2	961004000009		Wheel	1		
2	961004200001		Wheel	1		Anti-skid
3	961004000011		Oil sealing	1		
4	910200200167		Screw	8		
5	910700200044		Bearing	2		
6	961004000007		Sleeve	1		
7	507798510006		Gear Components	1		
7.01	961004000006		Gear	1		
7.02	961004000003		Gear shaft	1		
7.03	961004000002		Gear	1		
7.04	961004000005		Gear	1		
8	961004000010		Oil sealing	1		
9	507798510007		Gearbox	1		
10	961000700012		Oil sealing	1		
11	940700100015		Brake	1		STEKI

1= Supply as package. 2= Supply with constraints. 3= Phasing-out supply. 4= Supply as assembly. 5= Check other tables.

Chapter 2: Hydraulic System

01 Hydraulic Components(508546024001)

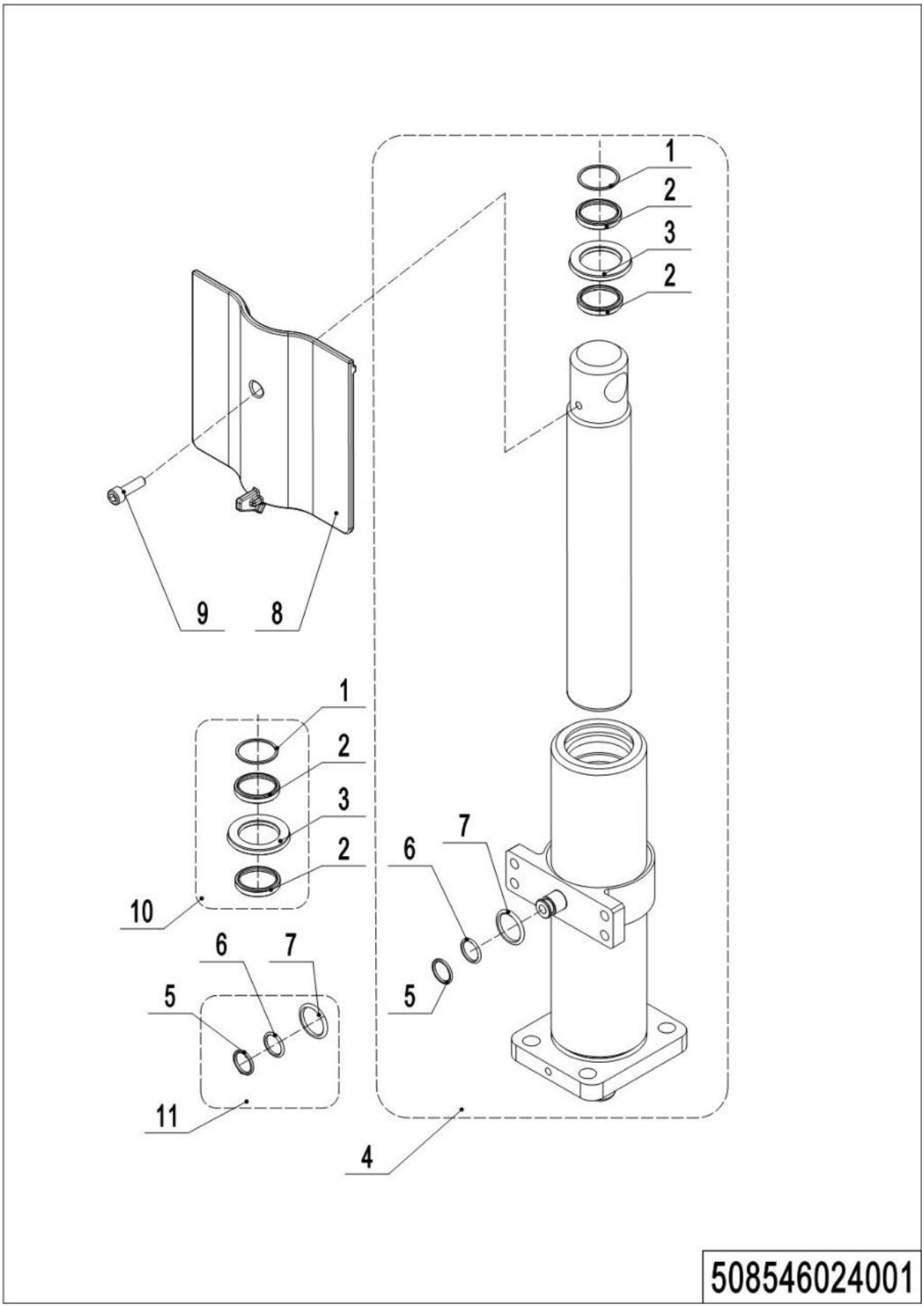

1= Supply as package. 2= Supply with constraints. 3= Phasing-out supply. 4= Supply as assembly. 5= Check other tables.

01 Hydraulic Components (508546024001)

No.	Item Code	Mark	Item Description	Qty.	Substitute	Note
1	910800400002		Wiper Seal	1		
2	910800500001		Support Ring	2		
3	910800300002		Seal Ring	1		
4	508524010000		Cylinder	1		
5	910800800003		Circlip	1		
6	910800100001		O-Ring	1		
7	910800100098		O-Ring	1		
8	508524020011		Cover	1		
9	910200200033	1	Screw	1		
10	508598510005		Seal Kit	1		
11	508598510004		Seal Kit	1		

1= Supply as package. 2= Supply with constraints. 3= Phasing-out supply. 4= Supply as assembly. 5= Check other tables.

02 Pump Components(508546024002)

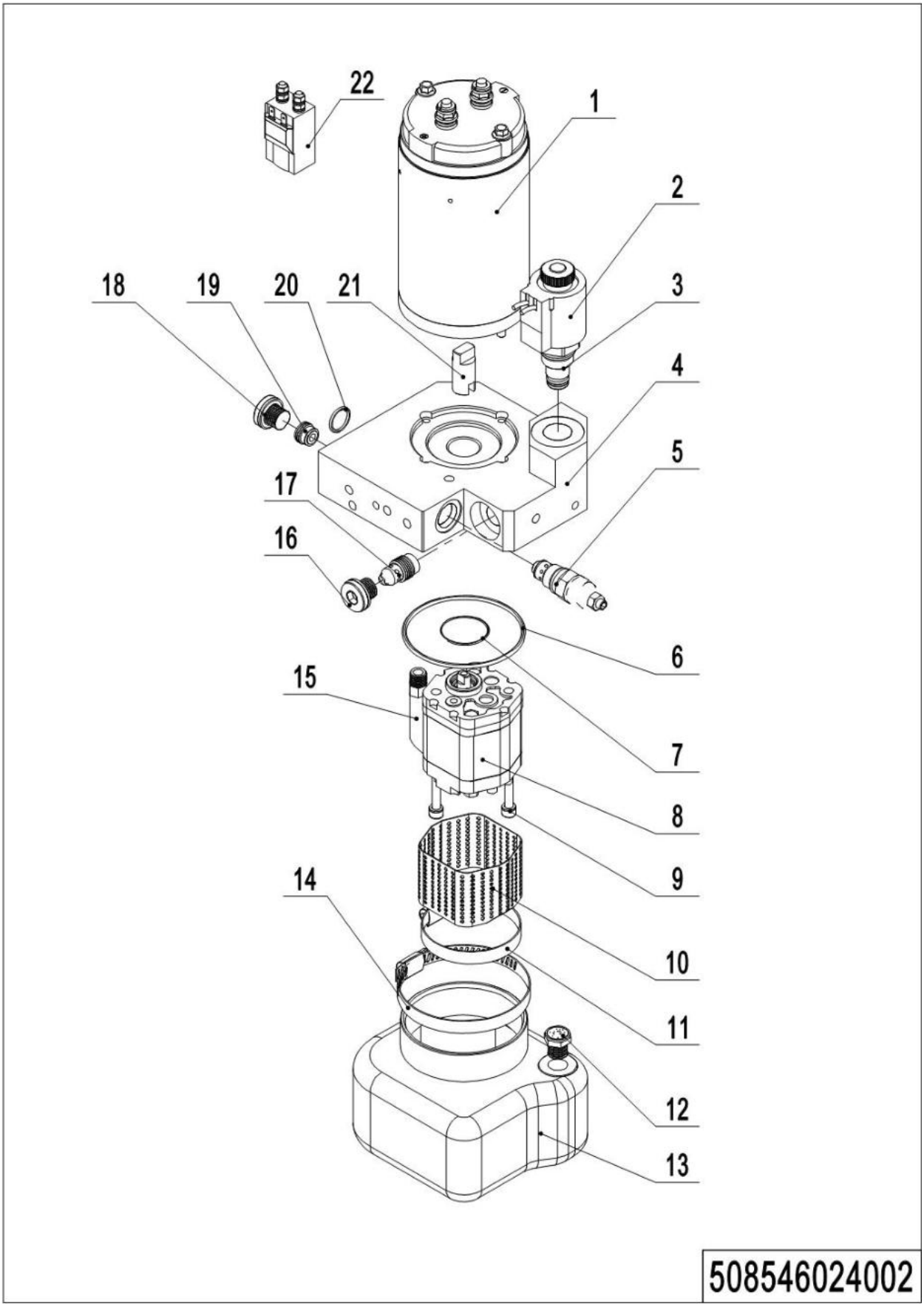

1= Supply as package. 2= Supply with constraints. 3= Phasing-out supply. 4= Supply as assembly. 5= Check other tables.

02 Pump Components(508046024002)

No.	Item Code	Mark	Item Description	Qty.	Substitute	Note
1	508598510007		Motor	1		MD48080AN
2	508598520001		Coil	1		YC048DC
3	505698520054		Magnetic Valve	1		SCV
4	508598520002		Valve Block	1		CMB3-101-66E
5	504498510015		Overflow Valve	1		RV-06
6	508598520003		O-Ring	1		67.95x2.62
7	910800100063		O-Ring	1		21.2x1.8
8	508598510008		Gear Pump	1		CBU-F1038
9	508598520004	1	Screw	2		M5x60
10	508598520005		Filter	1		59-30
11	508598520006		Hoop	1		KG02
12	508598510009		Cap-Tank	1		Z3/8
13	508598510010		Tank	1		0.4L-TP072A080-V
14	508598520007		Hoop	1		KG04
15	508598520008		Pipe	1		RU10-060
16	505698520043		End Cap	1		SP-09
17	505698520041		Valve	1		RPCV-02-04
18	505698520037		End Cap	1		SP-02
19	505698520038		Check Valve	1		CV-03
20	910800100098		O-Ring	1		13.5x1.8
21	508598520009		Coupling	1		DCP-312
22	508598520011		Switch	1		DK0148B

1= Supply as package. 2= Supply with constraints. 3= Phasing-out supply. 4= Supply as assembly. 5= Check other tables.

03 Hydraulic Connection Parts(508546024003)

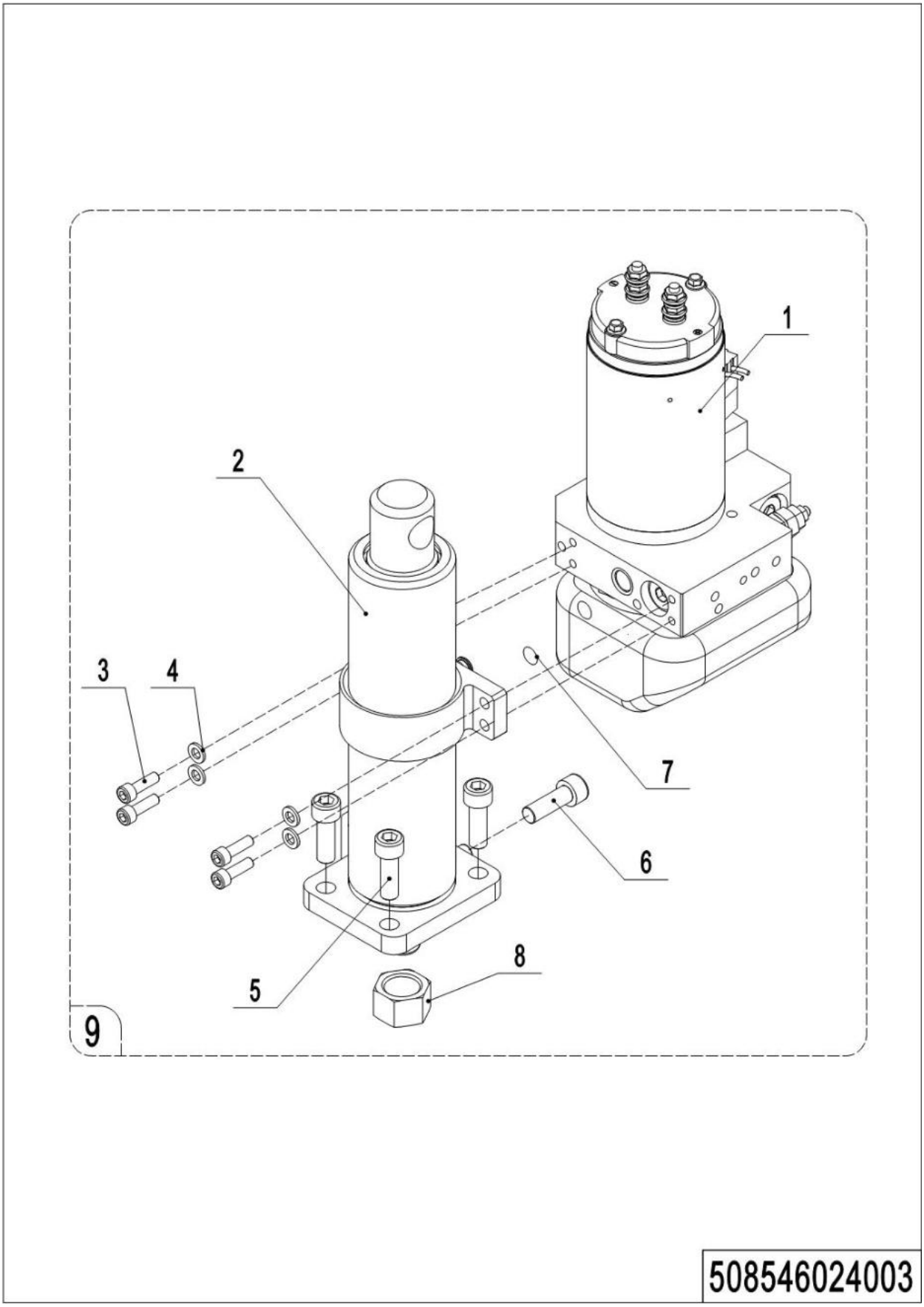

1= Supply as package. 2= Supply with constraints. 3= Phasing-out supply. 4= Supply as assembly. 5= Check other tables.

03 Hydraulic Connection Parts(508046024003)

No.	Item Code	Mark	Item Description	Qty.	Substitute	Note
1	508598510068		Pump Unit	1		
2	508524010000		Cylinder	1		
3	910200200036	1	Screw	4		
4	910400100005	1	Flat Washer	7		
5	910200200077	1	Screw	4		
6	910200200045	1	Screw	1		
7	910800100098		O-Ring	1		
8	910300400008		Nut	1		
9	508524001000		Hydraulic assembly	1		

1= Supply as package. 2= Supply with constraints. 3= Phasing-out supply. 4= Supply as assembly. 5= Check other tables.

Chapter 3: Truck Frame

01 Truck Frame (508546038501)

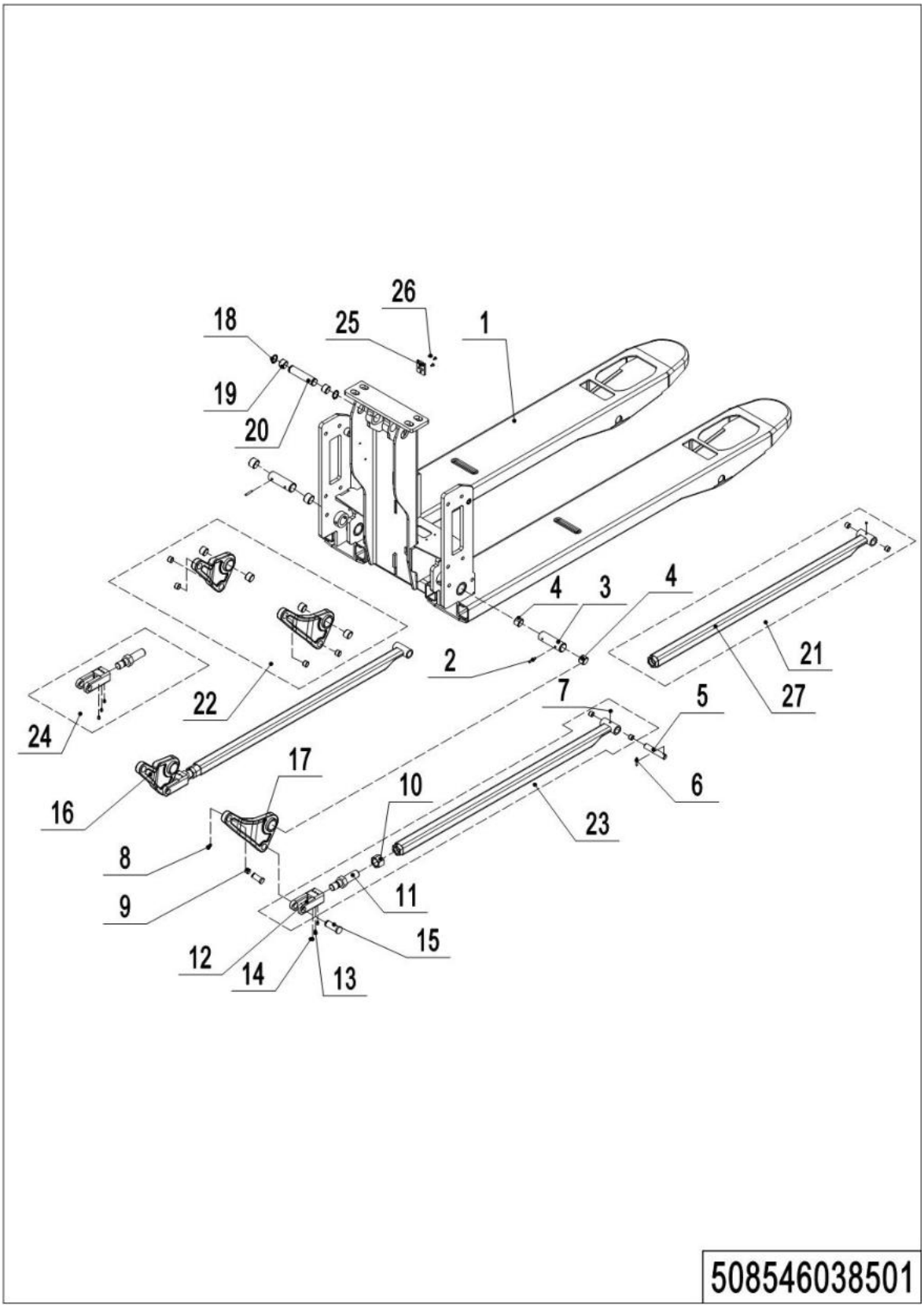

1= Supply as package. 2= Supply with constraints. 3= Phasing-out supply. 4= Supply as assembly. 5= Check other tables.

01 Truck Frame (507946038501)

No.	Item Code	Mark	Item Description	Qty.	Substitute	Note
1	508538510013		Chassis(US540x800)	1		
1	508538510012		Chassis(US540x915)	1		
1	508538510010		Chassis(US540x1000)	1		
1	508538510005		Chassis(US540x1150)	1		
1	508538510011		Chassis(US540x1220)	1		
2	910600400041	1	Spring Pin	2		
3	508538520019		Axle	2		
4	940500100098	1	Bushing	4		
5	502338520030		Axle	2		
6	910600400024	1	Spring Pin	2		
7	911200100001	1	Oil Cup	2		
8	910401300007	1	Circlip	4		
9	940500100083	1	Bushing	8		
10	910300400008	1	Nut	2		
11	508038520029		Threaded Rod	2		
12	508038520028		Push Rod Fork	2		
13	910201000005	1	Screw	2		
14	910600400015	1	Spring Pin	4		
15	508038520041		Pin	4		
16	508538510003		Rise Arm	1		
17	508538510004		Rise Arm	1		
18	910401300011	1	Circlip	2		
19	940500100096	1	Bushing	2		
20	508538520016		Pin	1		
21	508098510037		Push Rod Kit(800)	2		
21	508098510005		Push Rod Kit(915)	2		
21	508098510040		Push Rod Kit(1000)	2		
21	508098510000		Push Rod Kit(1150)	2		
21	508098510041		Push Rod Kit(1220)	2		
22	508598510000		Rise Arm	1		

01 Truck Frame (508546038501) Continuation

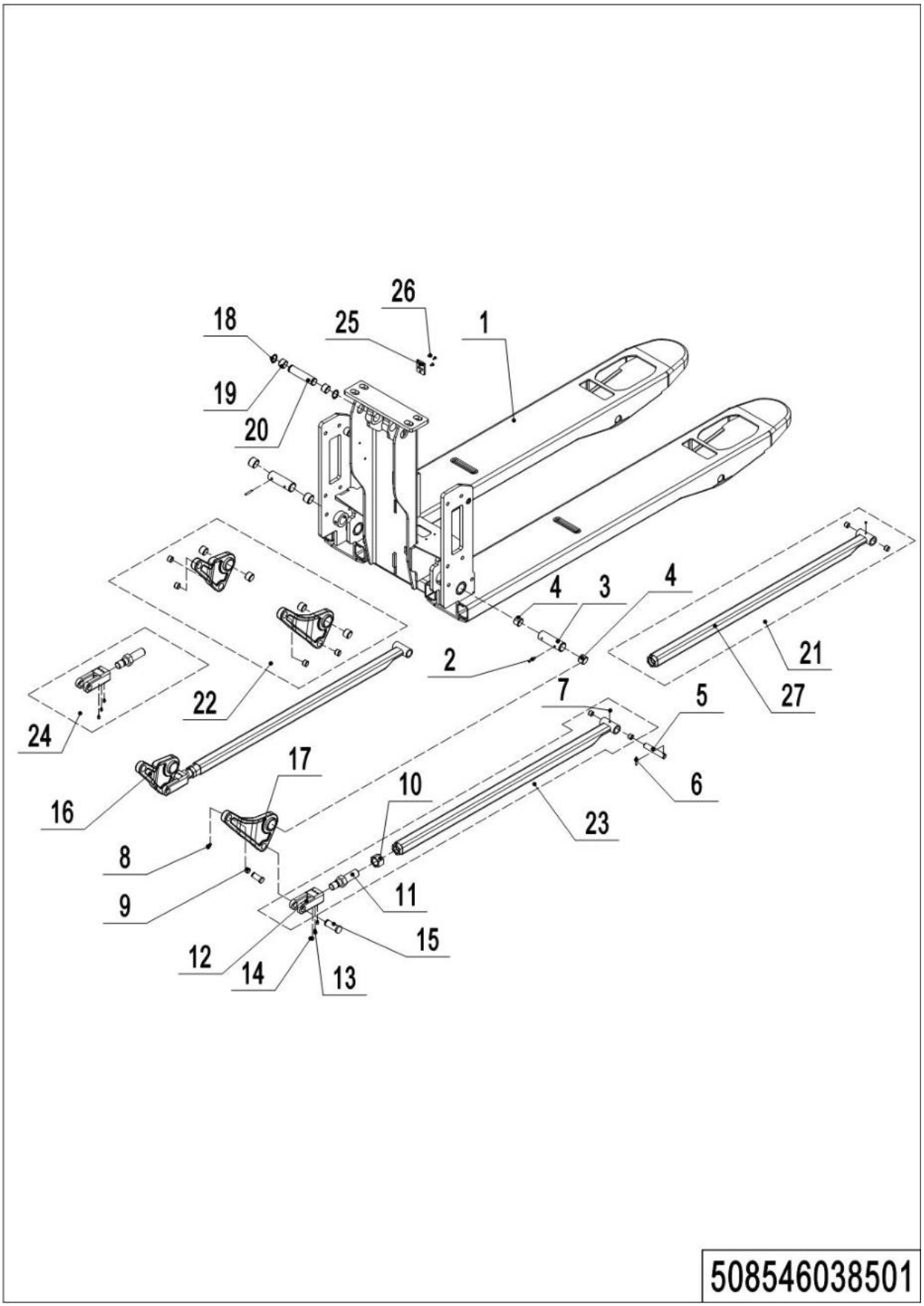

1= Supply as package. 2= Supply with constraints. 3= Phasing-out supply. 4= Supply as assembly. 5= Check other tables.

01 Truck Frame (508546038501) Continuation

No.	Item Code	Mark	Item Description	Qty.	Substitute	Note
23	508098510038		Push Rod Kit(800)	2		
23	508098510006		Push Rod Kit(915)	2		
23	508098510043		Push Rod Kit(1000)	2		
23	508098510002		Push Rod Kit(1150)	2		
23	508098510044		Push Rod Kit(1220)	2		
24	508598510014		Push Rod Fork Kit	2		
25	508038520109		Lock	1		
26	910200500034	1	Screw	3		
27	508038510016		Push Rod (800)	2		
27	508038510014		Push Rod (915)	2		
27	508038510017		Push Rod (1000)	2		
27	508038510011		Push Rod (1150)	2		
27	508038510024		Push Rod (1220)	2		

02 Truck Frame (508546038502)

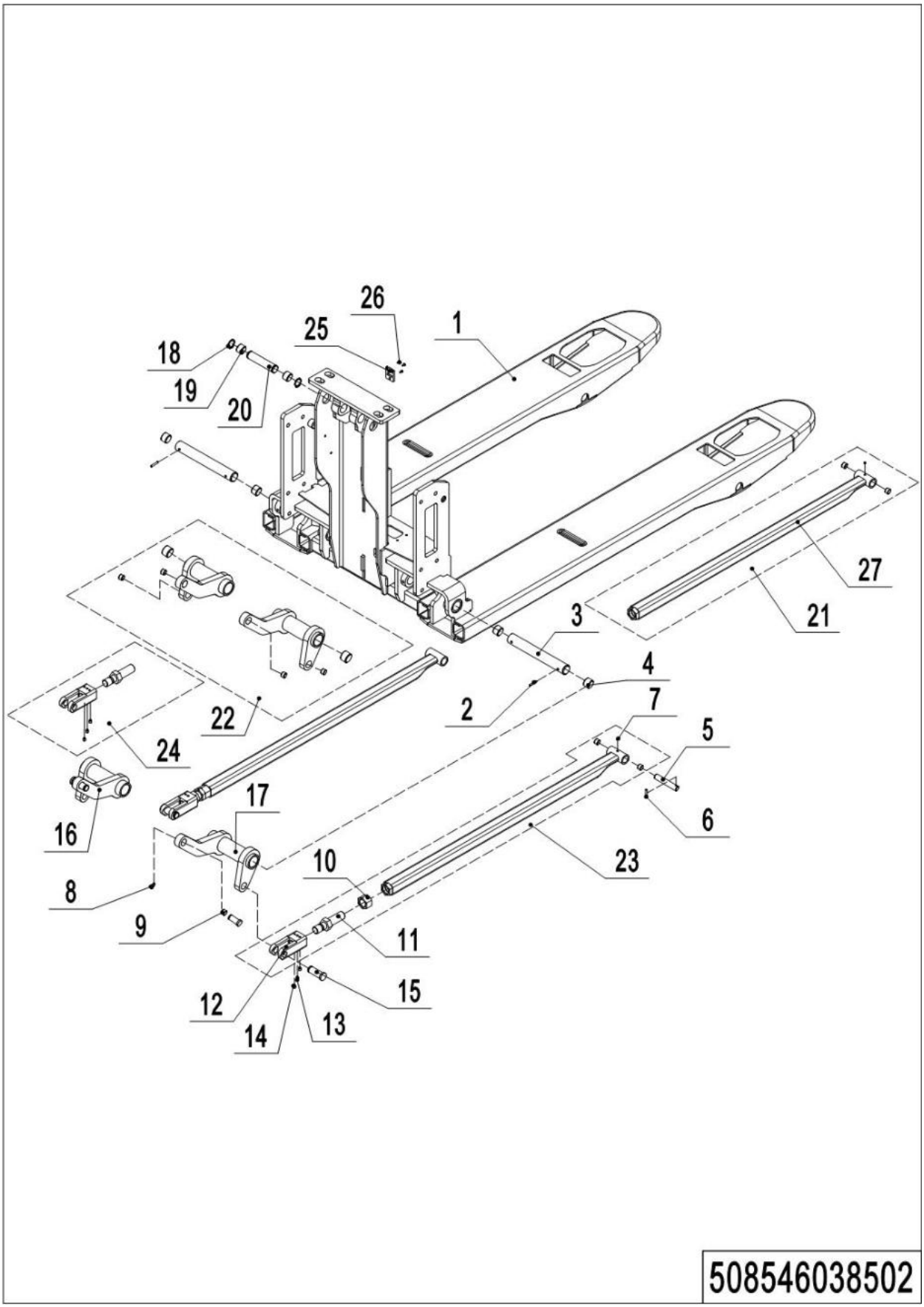

1= Supply as package. 2= Supply with constraints. 3= Phasing-out supply. 4= Supply as assembly. 5= Check other tables.

02 Truck Frame (508546038502)

No.	Item Code	Mark	Item Description	Qty.	Substitute	Note
1	508538510009		Chassis(US685x800)	1		
1	508538510008		Chassis(US685x915)	1		
1	508538510006		Chassis(US685x1000)	1		
1	508538510000		Chassis(US685x1150)	1		
1	508538510007		Chassis(US685x1220)	1		
2	910600400041	1	Spring Pin	2		
3	508538520015		Axle	2		
4	940500100097	1	Bushing	4		
5	502338520030		Axle	2		
6	910600400024	1	Spring Pin	2		
7	911200100001	1	Oil Cup	2		
8	910401300007	1	Circlip	4		
9	940500100083	1	Bushing	8		
10	910300400008	1	Nut	2		
11	508038520029		Threaded Rod	2		
12	508038520028		Push Rod Fork	2		
13	910201000005	1	Screw	2		
14	910600400015	1	Spring Pin	4		
15	508038520041		Pin	4		
16	508538510001		Rise Arm	1		
17	508538510002		Rise Arm	1		
18	910401300011	1	Circlip	2		
19	940500100096	1	Bushing	2		
20	508538520016		Pin	1		
21	508098510037		Push Rod Kit(800)	2		
21	508098510005		Push Rod Kit(915)	2		
21	508098510040		Push Rod Kit(1000)	2		
21	508098510000		Push Rod Kit(1150)	2		
21	508098510041		Push Rod Kit(1220)	2		
22	508598510001		Rise Arm	1		

02 Truck Frame (508546038502) Continuation

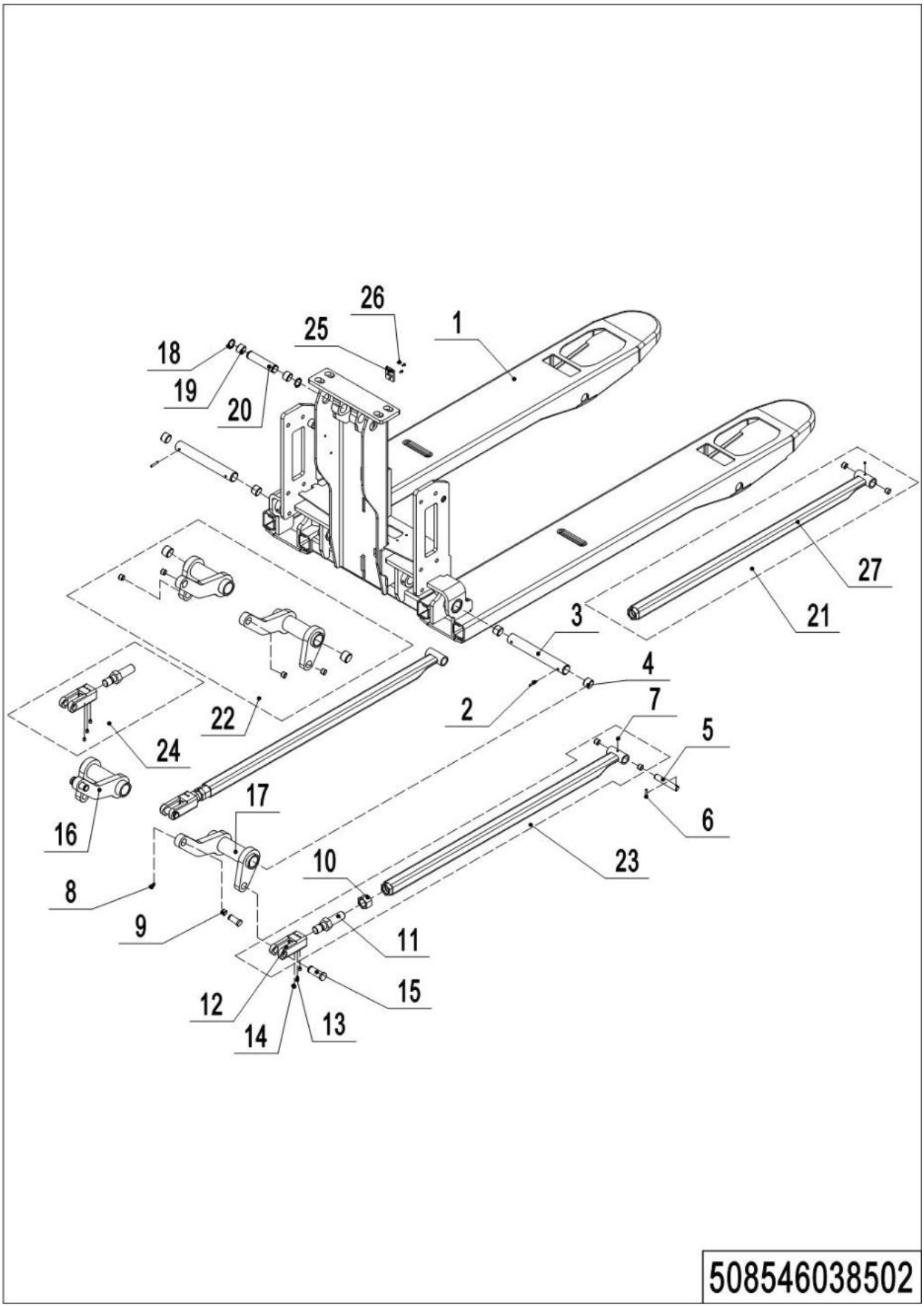

1= Supply as package. 2= Supply with constraints. 3= Phasing-out supply. 4= Supply as assembly. 5= Check other tables.

02 Truck Frame (508546038502) Continuation

No.	Item Code	Mark	Item Description	Qty.	Substitute	Note
23	508098510038		Push Rod Kit(800)	2		
23	508098510006		Push Rod Kit(915)	2		
23	508098510043		Push Rod Kit(1000)	2		
23	508098510002		Push Rod Kit(1150)	2		
23	508098510044		Push Rod Kit(1220)	2		
24	508598510014		Push Rod Fork Kit	2		
25	508038520109		Lock	1		
26	910200500034	1	Screw	3		
27	508038510016		Push Rod (800)	2		
27	508038510014		Push Rod (915)	2		
27	508038510017		Push Rod (1000)	2		
27	508038510011		Push Rod (1150)	2		
27	508038510024		Push Rod (1220)	2		

03 Covers and Panels(508546038503)

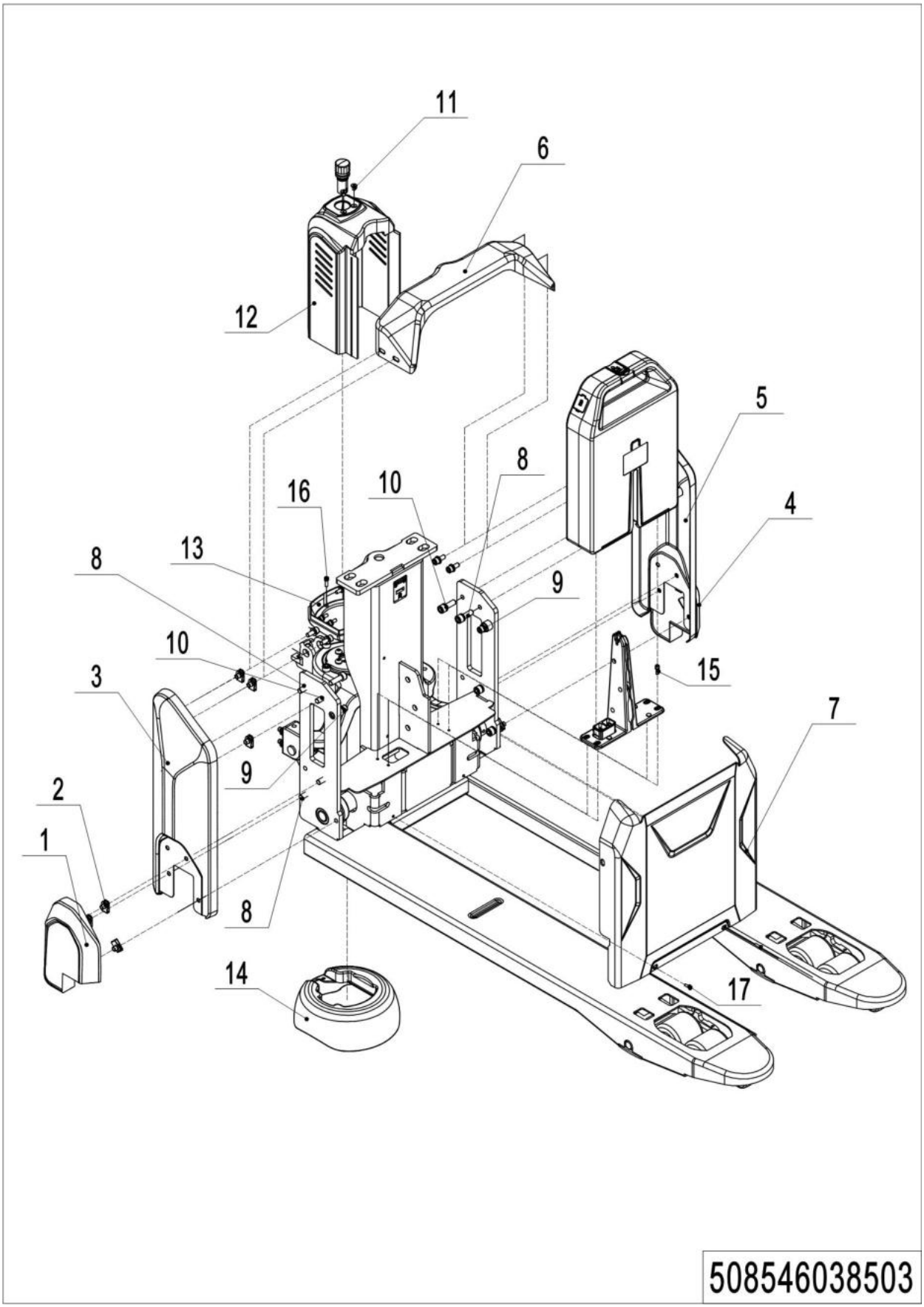

1= Supply as package. 2= Supply with constraints. 3= Phasing-out supply. 4= Supply as assembly. 5= Check other tables.

03 Covers and Panels(508546038503)

No.	Item Code	Mark	Item Description	Qty.	Substitute	Note
1	508038510103		Side Cover(right 540)	1		
1	508038510105		Side Cover(right 685)	1		
2	940400400002	1	Cage Nut	14		
3	508038510101		Side cover(right)	1		
4	508038510102		Side Cover(left 540)	1		
4	508038510104		Side Cover(left 685)	1		
5	508038510100		Side cover(left)	1		
6	508038520100		Cover	1		
7	508038520111		Front Panel	1		
8	910200200058	1	Screw	10		
9	910200200055	1	Screw	6		
10	910400100006	1	Flat Washer	6		
11	910200400015	1	Screw	2		
11	910200400052	1	Screw	2		EN1175-2020
12	508524020010		Cover	1		
13	508524020012		Shield	1		
14	508013520101		Cover	1		
15	910200500037	1	Screw	4		
16	910200200033	1	Screw	3		
17	910200500069	1	Screw	2		

Chapter 4: Steering System, Braking System, Wheels

01 Tiller Unit(508546011001)

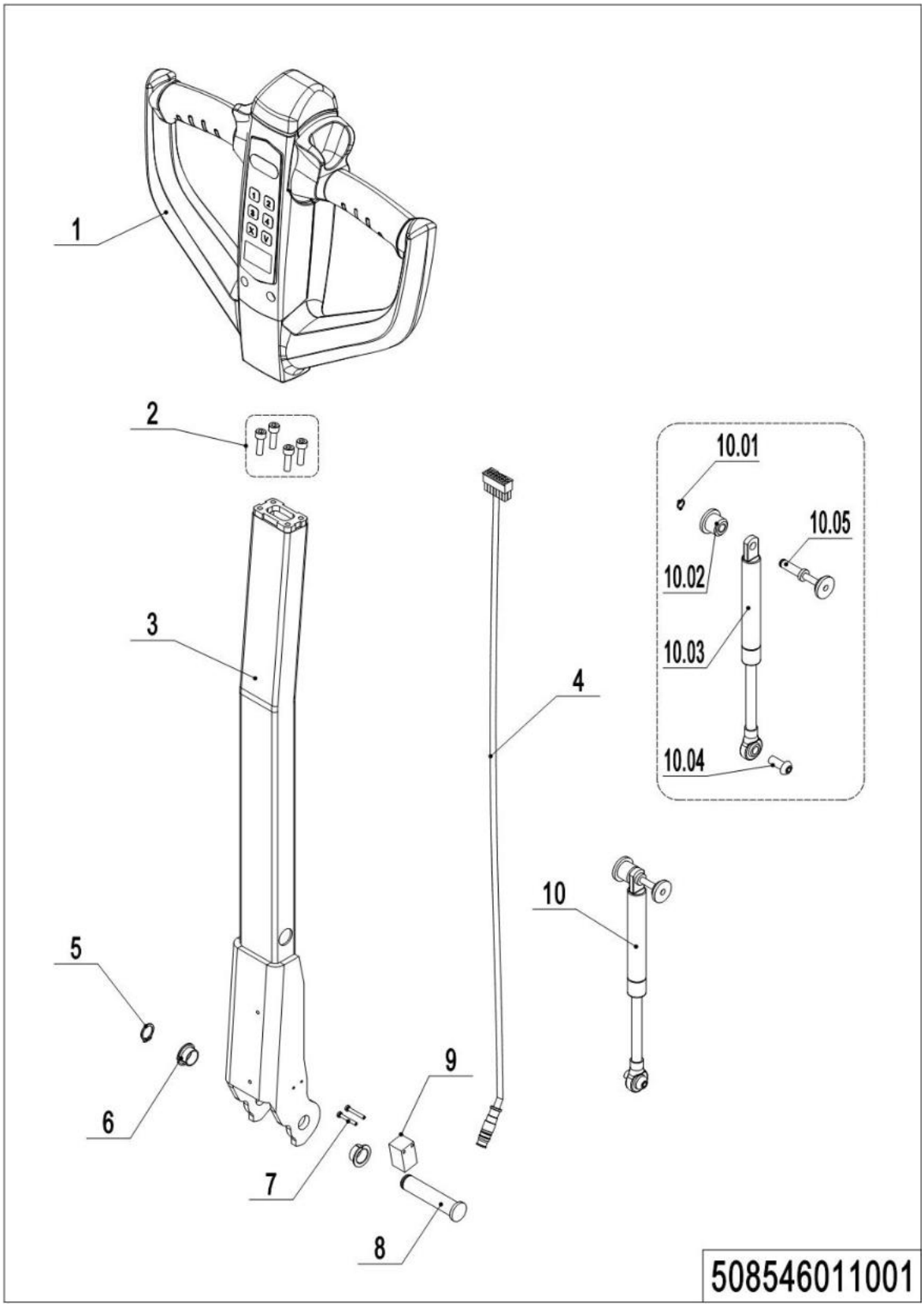

1= Supply as package. 2= Supply with constraints. 3= Phasing-out supply. 4= Supply as assembly. 5= Check other tables.

01 Tiller Unit(508546011001)

No.	Item Code	Mark	Item Description	Qty.	Substitute	Note
1	922100100017	3	Control Handle	1		DT
1	922100100123		Control Handle	1		EN1175-2020
1	922100100169		Control Handle	1		SJ
1	922100100170		Control Handle	1		SJ
2	910200200036	1	Screw	4		
3	508011010000		Tiller	1		
4	508533010001		Wire Harness	1		
5	910401300006		Circlip	1		
6	940500200001		Bushing	2		
7	941101100001	1	Screw	2		
8	508011020004		Pin	1		
9	920200400026		Proximity Switch	1		
10	508098510084		Gas Spring Kit	1		
10.01	910401300001	1	Circlip	1		
10.02	508011020005		Fixing Base	1		
10.03	508011010001		Gas Spring	1		
10.04	941100100011	1	Screw	1		
10.05	508011010002		Pin	1		

1= Supply as package. 2= Supply with constraints. 3= Phasing-out supply. 4= Supply as assembly. 5= Check other tables.

02 Control Handle(DT) (508546011002)

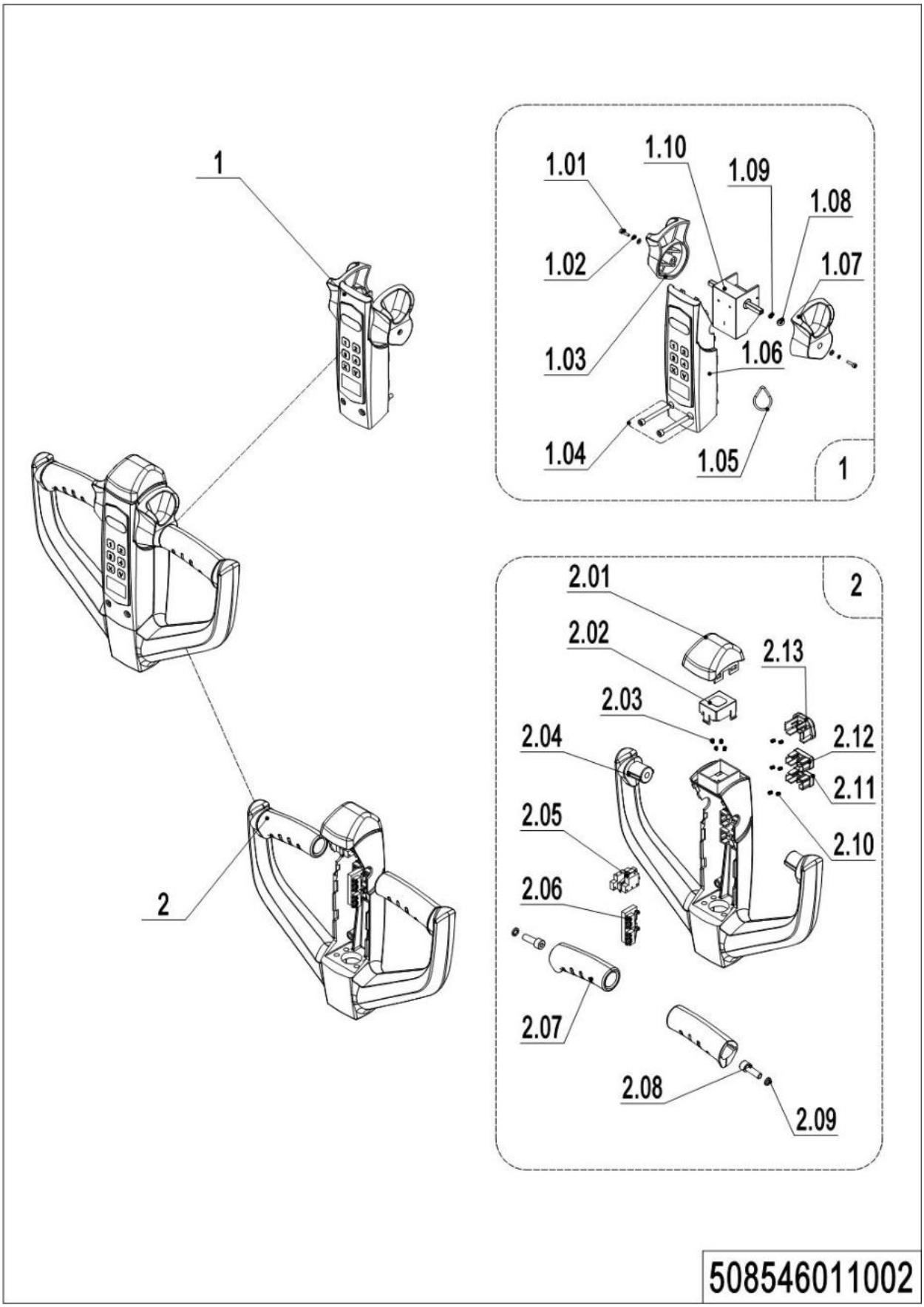

1= Supply as package. 2= Supply with constraints. 3= Phasing-out supply. 4= Supply as assembly. 5= Check other tables.

02 Control Handle(DT) (508546011002)

No.	Item Code	Mark	Item Description	Qty.	Substitute	Note
--	922100100017	3	Control Handle	1		
1	508598510011	3	Handle Cap Kit	1		
1.01	910200200003	1	Screw	2		
1.02	910400500002	1	Spring Washer	2		
1.03	508098520020	3	Traction lever	1		
1.04	910200200159	1	Screw	2		
1.05	508598520000	3	ID Card	1		
1.06	508598510015	3	Display Screen kit	1		
1.07	508098520014	3	Traction lever	1		
1.08	508098520015	3	Bushing	2		
1.09	508098520016	3	Bushing	2		
1.10	508098510028	3	Accelerator	1		
2	508098510031	3	Handle Cap Kit	1		
2.01	508098520018	3	Cap,Break Switch	1		
2.02	508098520019	3	Bracket	1		
2.03	502311020018	3	Spring	4		
2.04	508098520012	3	Handle Cap	1		
2.05	508098510029	3	Microswitch Kits	1		
2.06	508098510030	3	Microswitch Kits	1		
2.07	508098520013	3	Handle	2		
2.08	910200200058	1	Screw	2		
2.09	910400500006	1	Spring Washer	2		
2.10	502311020022	3	Spring	6		
2.11	502398520011	3	Button	1		
2.12	502398520010	3	Button	1		
2.13	502398520009	3	Horn Button	1		

03 Control Handle (EN1175-2020)(508546011003)

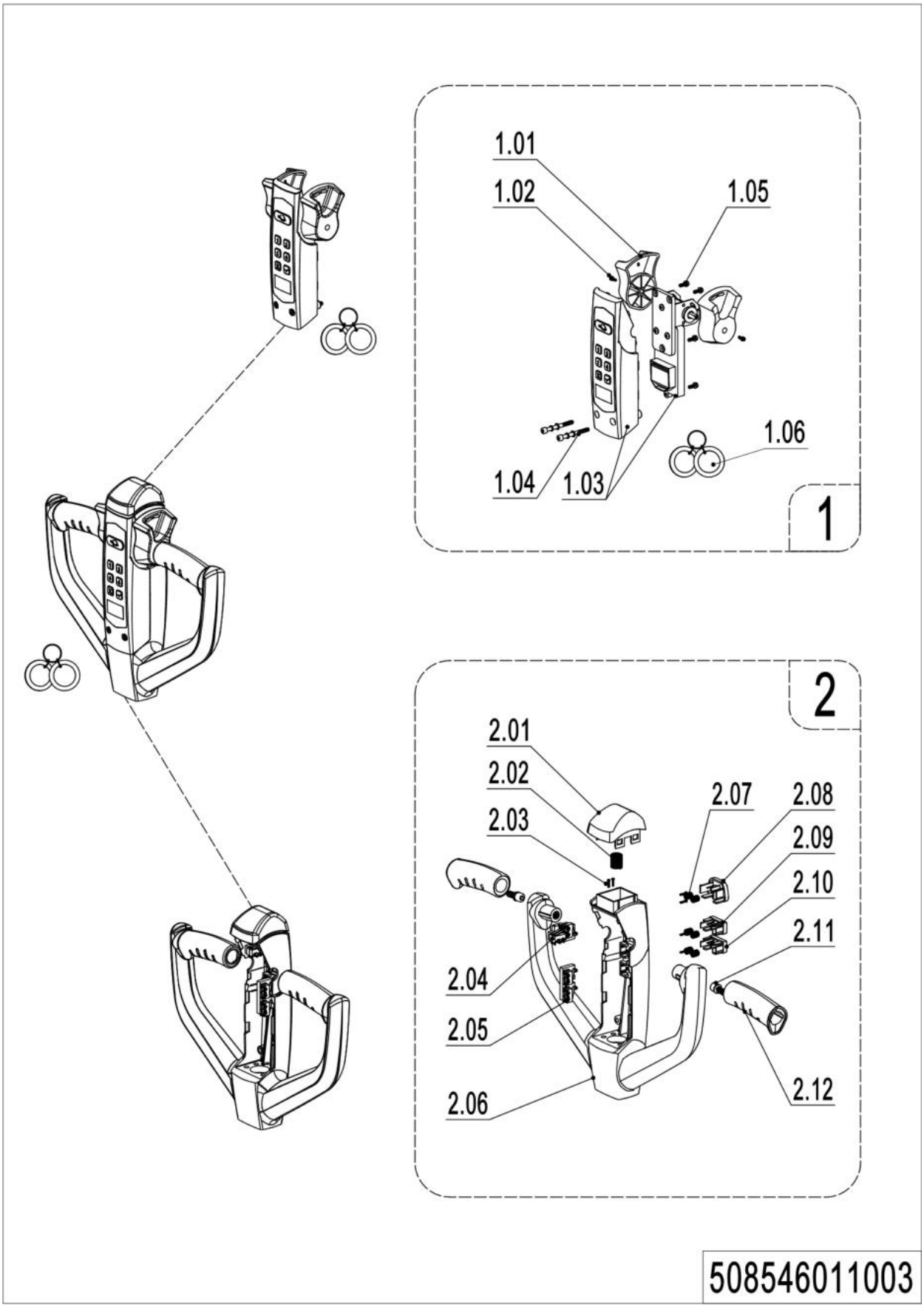

1= Supply as package. 2= Supply with constraints. 3= Phasing-out supply. 4= Supply as assembly. 5= Check other tables.

03 Control Handle (EN1175-2020)(508546011003)

No.	Item Code	Mark	Item Description	Qty.	Substitute	Note
--	922100100123		Control Handle	1		
1	508598510046		Handle Cap Kit	1		
1.01	508098520103		Traction lever Kits	1		
1.02	508098520104		Screw Kits	1		
1.03	508598520036		PCBA Assembly	1		
1.04	508098520108		Screw Kits	2		
1.05	508098520109		Screw	4		
1.06	508098520111		ID Card	1		
2	508098510125		Handle Cap Kit	1		
2.01	508098520112		Button	1		
2.02	508098520113		Spring	1		
2.03	508098520114		Screw	6		ST2.2x12
2.04	508098520115		Wire Harness	1		Belly switch and horn
2.05	508098520116		Wire Harness	1		Lifting and lowing
2.06	508098520117		Handle Cap	1		
2.07	508098520118		Spring	6		
2.08	508098520119		Button	1		
2.09	508098520120		Button	1		
2.10	508098520121		Button	1		
2.11	508098520122		Screw Kits	2		
2.12	508098520123		Handle	2		

04 Control Handle(SJ) (508546011004)

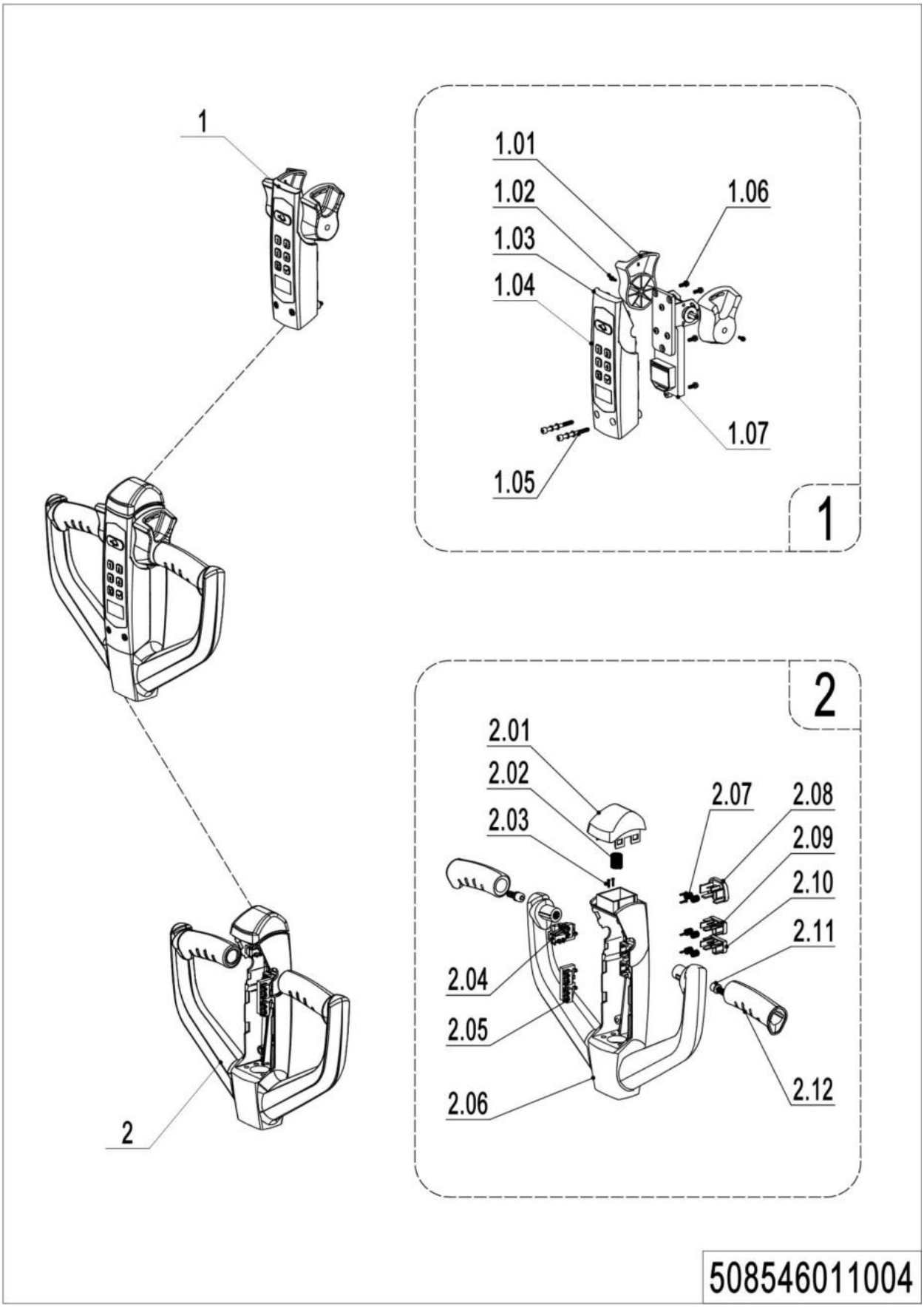

04 Control Handle(SJ) (508546011004)

No.	Item Code	Mark	Item Description	Qty.	Substitute	Note
--	922100100169		Control Handle	1		SJ
1	508598510061		Handle Cap Kit	1		
1.01	508098520103		Traction lever Kits	1		
1.02	508098520129		Screw Kits	1		
1.03	508098520105		Handle Cap	1		
1.04	508098520131		Membrane switch	1		
1.05	508098520108		Screw Kits	2		
1.06	508098520109		Screw	4		
1.07	508598520050		PCBA assembly	1		
2	508098510150		Handle Cap Kit	1		
2.01	508098520112		Button	1		
2.02	508098520113		Spring	1		
2.03	508098520114		Screw	6		ST2.2x12
2.04	508098520133		Wire Harness	1		Belly switch and horn
2.05	508098520116		Wire Harness	1		Lifting and lowing
2.06	508098520117		Handle Cap	1		
2.07	508098520118		Spring	6		
2.08	508098520119		Button	1		
2.09	508098520120		Button	1		
2.10	508098520121		Button	1		
2.11	508098520122		Screw Kits	2		
2.12	508098520123		Handle	2		

1= Supply as package. 2= Supply with constraints. 3= Phasing-out supply. 4= Supply as assembly. 5= Check other tables.

05 Control Handle(SJ, IC card) (508546011005)

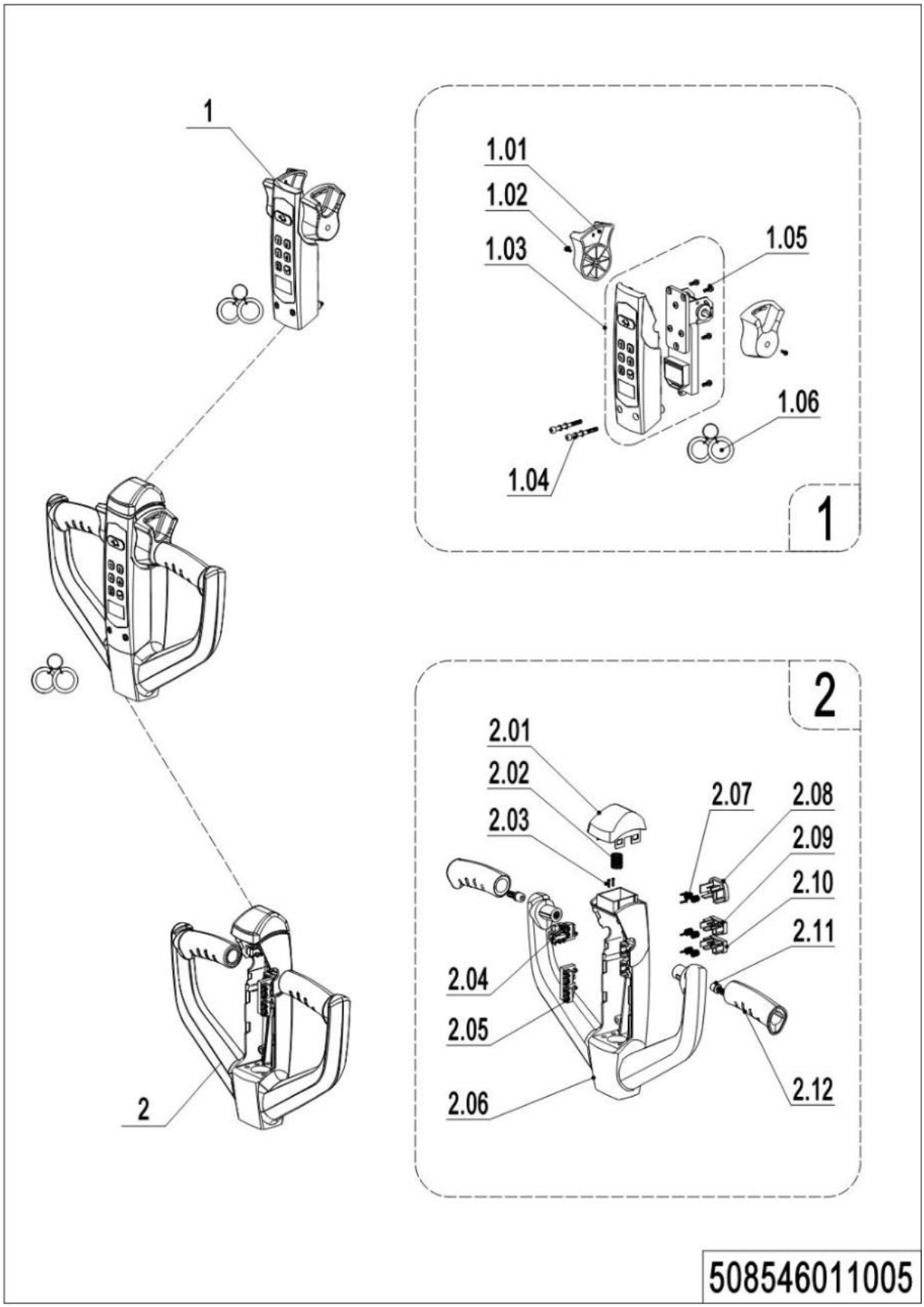

05 Control Handle(SJ, IC card) (508546011005)

No.	Item Code	Mark	Item Description	Qty.	Substitute	Note
--	922100100170		Control Handle	1		SJ
1	508598510062		Handle Cap Kit	1		
1.01	508098520103		Traction lever Kits	1		
1.02	508098520129		Screw Kits	1		
1.03	508598520051		PCBA assembly	1		
1.04	508098520108		Screw Kits	2		
1.05	508098520109		Screw	4		
1.06	507698520001		ID card	1		
2	508098510150		Handle Cap Kit	1		
2.01	508098520112		Button	1		
2.02	508098520113		Spring	1		
2.03	508098520114		Screw	6		ST2.2x12
2.04	508098520133		Wire Harness	1		Belly switch and horn
2.05	508098520116		Wire Harness	1		Lifting and lowing
2.06	508098520117		Handle Cap	1		
2.07	508098520118		Spring	6		
2.08	508098520119		Button	1		
2.09	508098520120		Button	1		
2.10	508098520121		Button	1		
2.11	508098520122		Screw Kits	2		
2.12	508098520123		Handle	2		

06 Load Wheel (508546017001)

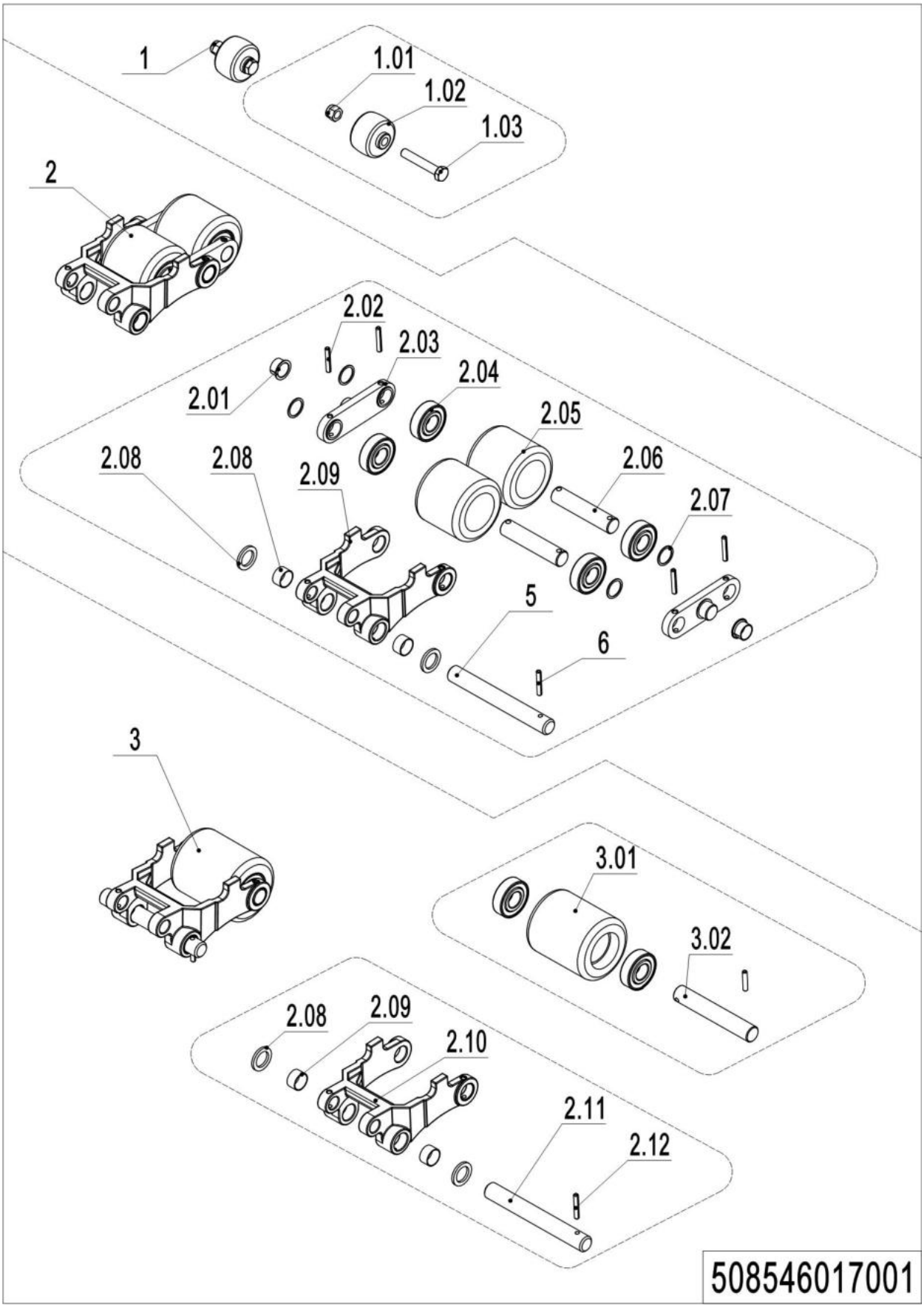

06 Load Wheel (Tandem) (508546017001)

No.	Item Code	Mark	Item Description	Qty.	Substitute	Note
1	502398510003		Pulley components	2		
1.01	910300500005	1	Nut	2		
1.02	505638520039		Running Pulley	2		
1.03	941100200019	1	Bolt	2		
2	508098510049		Wheel	2		
2.01	940500200038		Bushing	4		
2.02	910600400027	1	Spring Pin	8		
2.03	502317020000		Plate	4		
2.04	910700200019		Bearing	8/4		Double / single
2.05	940300300005		WheelΦ80x70	4		
2.06	502317020001		Axle	4		
2.07	940600500013		Washer	8/4		Double / single
2.08	940500100088		Bushing	4		
2.09	502338520078		Riser	2		
3	508098510050		Wheel Kits	2		
3.01	940300300023		WheelΦ80x93	2		
3.02	301017020001		Axle	2		
4	325017020000		Washer	4		
5	508038520030		Axle	2		
6	910600400025		Spring Pin	2		

07 Caster(508546016501)

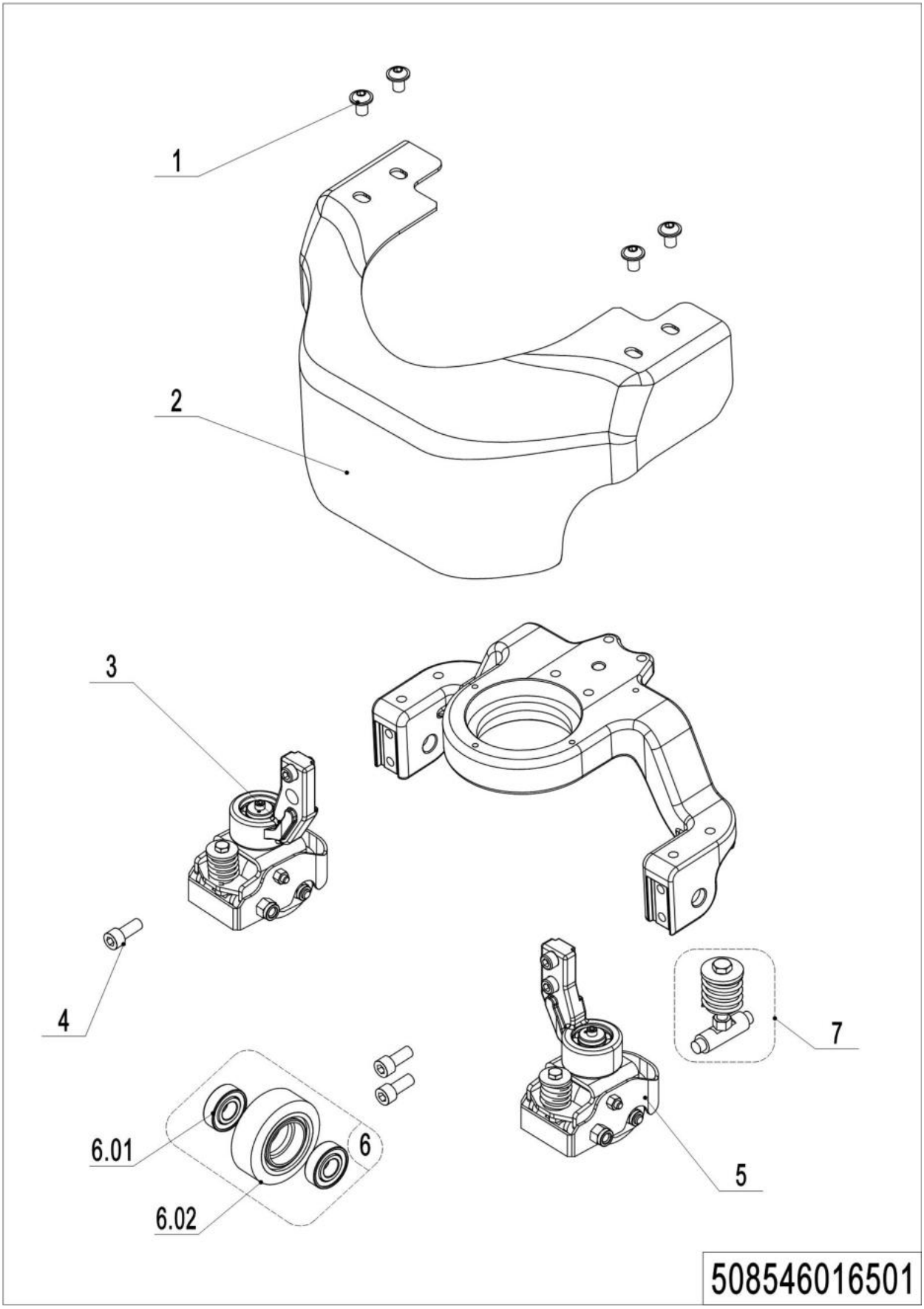

1= Supply as package. 2= Supply with constraints. 3= Phasing-out supply. 4= Supply as assembly. 5= Check other tables.

07 Caster(508546016501)

No.	Item Code	Mark	Item Description	Qty.	Substitute	Note
1	941100100005	1	Screw	4		
2	508016520000		Apron	1		35 mm off the ground
2	508016520008		Apron	1		45 mm off the ground
2	508016510006		Apron	1		35 mm off the ground
2	508016510011		Apron	1		45 mm off the ground
3	508016510002		Caster Assembly	2		
4	910200200182	1	Screw	4		
5	508016510005		Caster Assembly	1		
6	502398510015	2	Load Wheel Kit	2		
6.1	910700200018		Bearing	4		
6.2	940300300017		WheelΦ80x30	2		
7	508098510047		Spring Components	2		

08 Caster(without)（508546016502）

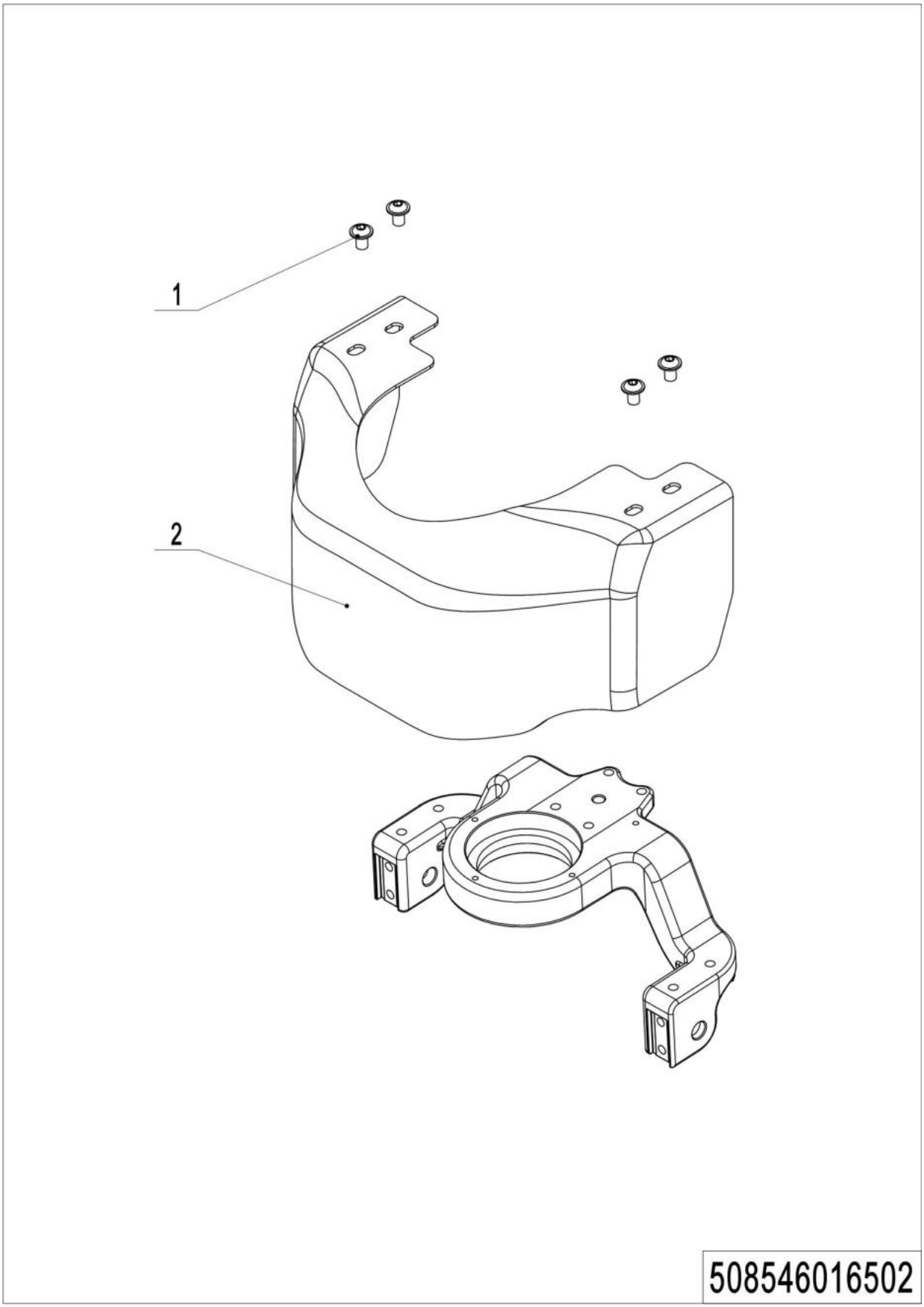

1= Supply as package. 2= Supply with constraints. 3= Phasing-out supply. 4= Supply as assembly. 5= Check other tables.

08 Caster(without）(508546016502)

No.	Item Code	Mark	Item Description	Qty.	Substitute	Note
1	941100100005	1	Screw	4		
2	508016520001		Apron	1		35 mm off the ground
2	508016520009		Apron	1		45 mm off the ground

1= Supply as package. 2= Supply with constraints. 3= Phasing-out supply. 4= Supply as assembly. 5= Check other tables.

Chapter 5: Electrical Parts

01 Wire Harness (508546033001)

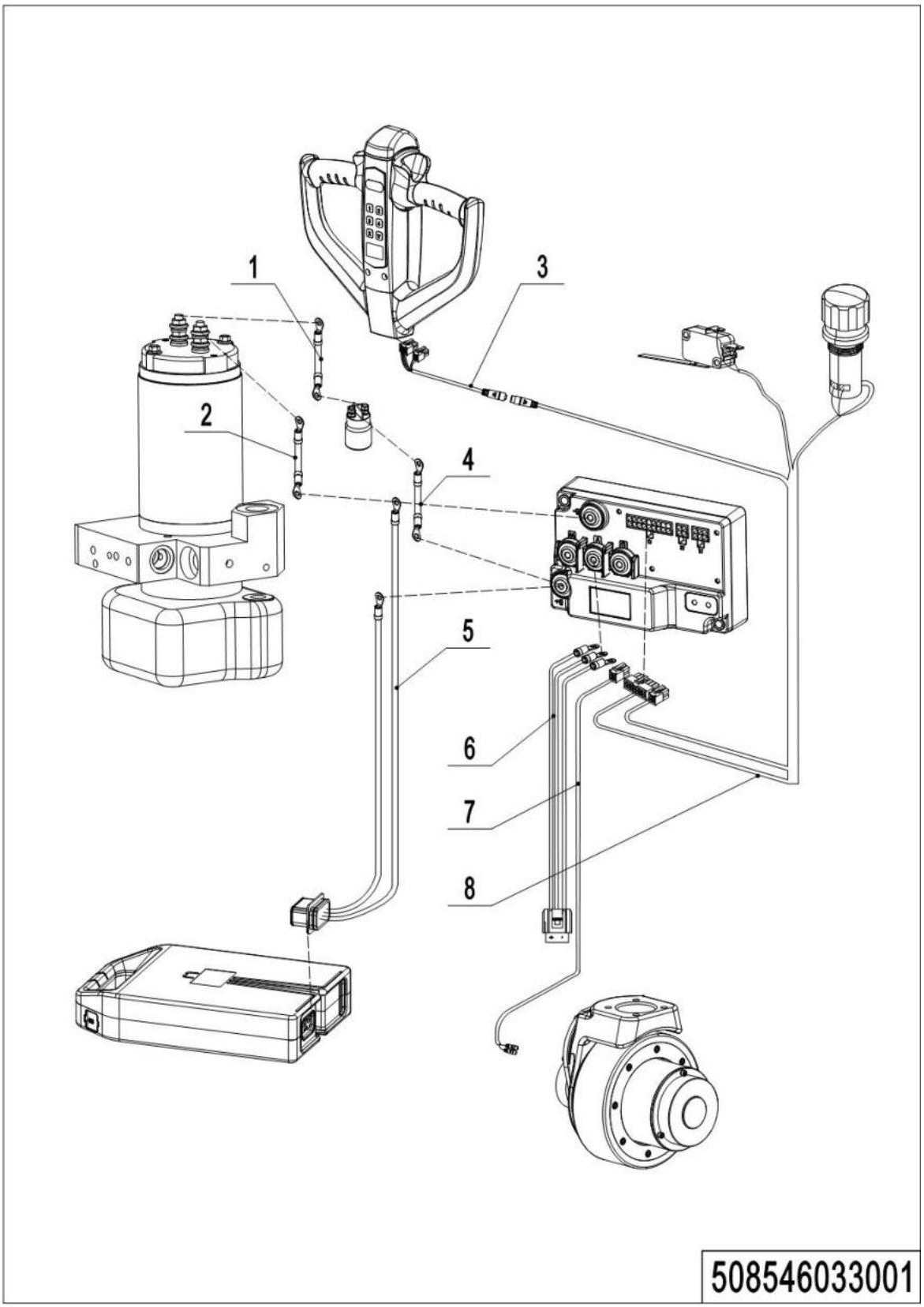

1= Supply as package. 2= Supply with constraints. 3= Phasing-out supply. 4= Supply as assembly. 5= Check other tables.

01 Wire Harness(508546033001)

No.	Item Code	Mark	Item Description	Qty.	Substitute	Note
1	508533010006		Wire Harness	1		
2	508533010005		Wire Harness	1		
3	508533010001		Wire Harness	1		
4	508533010004		Wire Harness	1		
5	508533010003		Wire Harness	1		
6	508533010007		Wire Harness	1		
7	508533010002		Wire Harness	1		
8	508533010000		Wire Harness	1		
8	508533010009		Wire Harness	1		JS

02 Wire Harness (EN1175-2020)(508546033003)

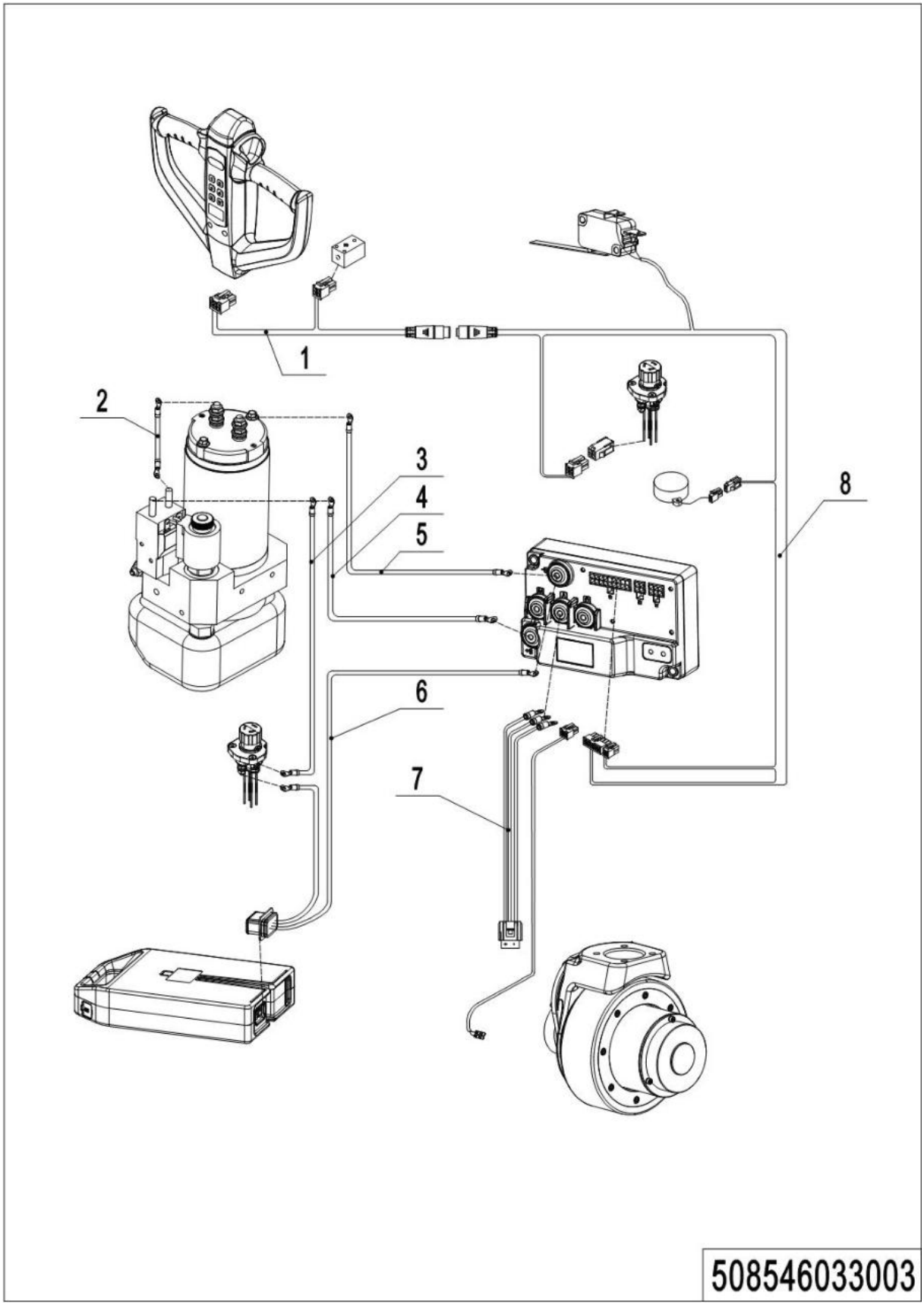

1= Supply as package. 2= Supply with constraints. 3= Phasing-out supply. 4= Supply as assembly. 5= Check other tables.

02 Wire Harness (EN1175-2020) (508546033001)

No.	Item Code	Mark	Item Description	Qty.	Substitute	Note
1	508533010001		Wire Harness	1		
2	508533010006		Wire Harness	1		
3	508533010014		Wire Harness	1		
4	508533010004		Wire Harness	1		
5	508533010005		Wire Harness	1		
6	508533010021		Wire Harness	1		
7	508533010007		Wire Harness	1		
8	508533010020		Wire Harness	1		

03 Controller (508546033002)

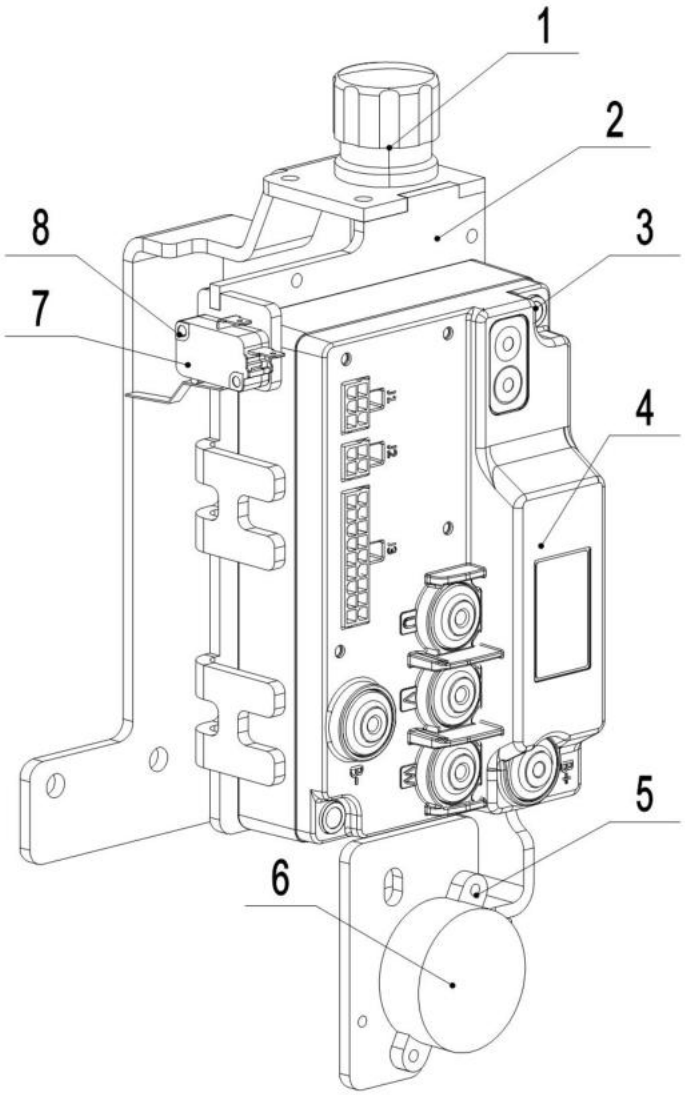

508546033002

1= Supply as package. 2= Supply with constraints. 3= Phasing-out supply. 4= Supply as assembly. 5= Check other tables.

03 Controller(508546033002)

No.	Item Code	Mark	Item Description	Qty.	Substitute	Note
1	920200100015		Emergency Button	1		
2	508524010002		Mounting Rack	1		
3	910200200027	1	Screw	2		
4	921400100093		Controller	1		
5	910200300002	1	Screw	1		
6	920500100004		Horn	1		
7	920200300012		Microswitch	1		
8	910200200004	1	Screw	1		

04 Controller(EN1175-2020) (508546033004)

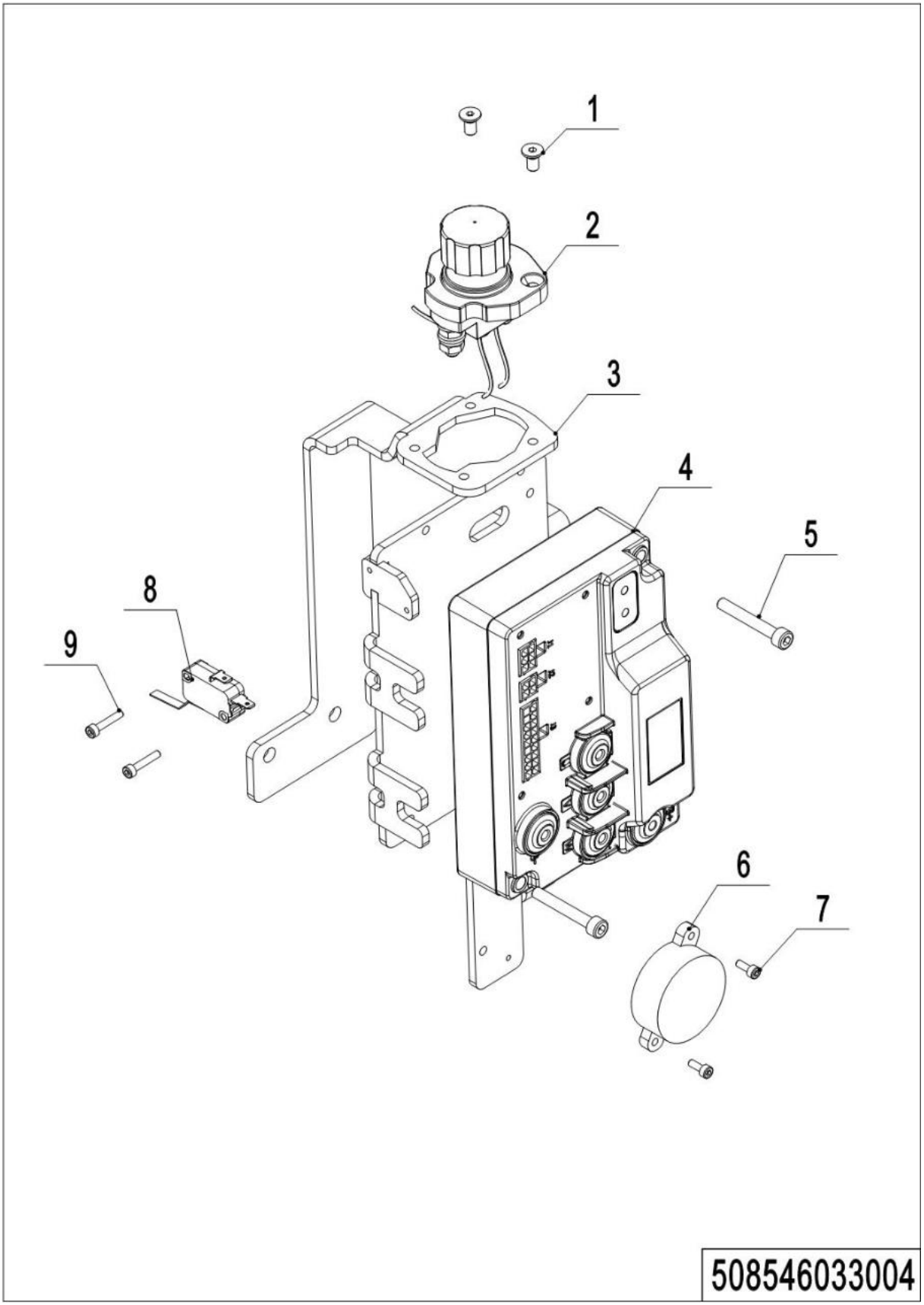

1= Supply as package. 2= Supply with constraints. 3= Phasing-out supply. 4= Supply as assembly. 5= Check other tables.

04 Controller(EN1175-2020) (508546033004)

No.	Item Code	Mark	Item Description	Qty.	Substitute	Note
1	910200400010		Screw	2		
2	920200100027		Emergency Button	1		
3	508524010003		Mounting Rack	1		
4	921400100093		Controller	1		
5	910200200027		Screw	2		
6	509998520063		buzzer	1		
7	910200300002		Screw	2		
8	920200300012		Microswitch	1		
9	910200200004		Screw	2		

05 Charger (508546036501)

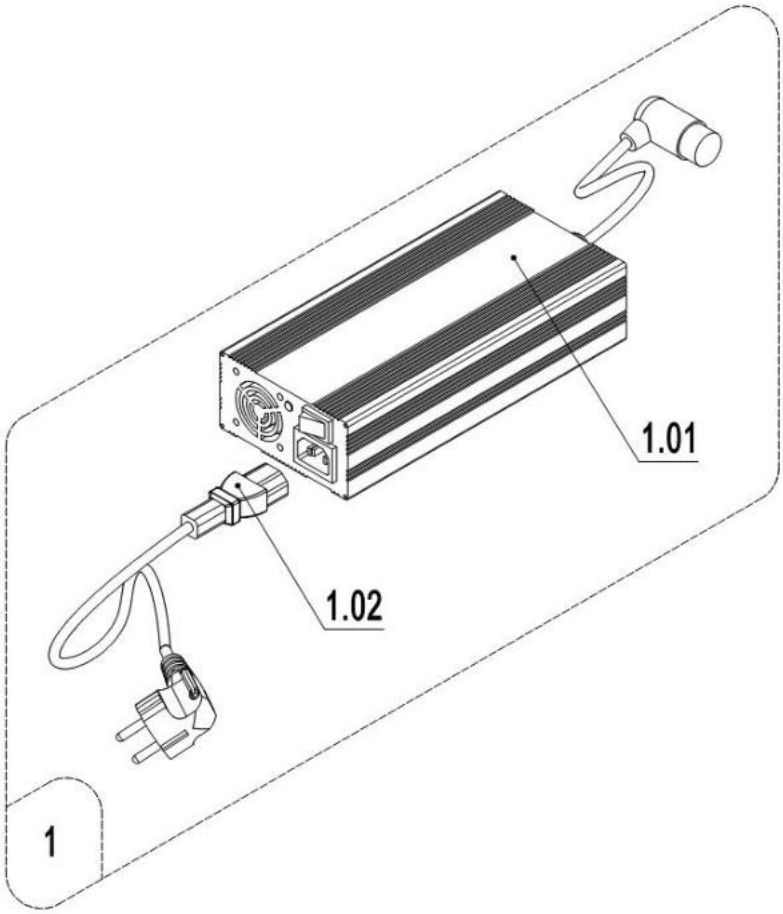

508546036501

1= Supply as package. 2= Supply with constraints. 3= Phasing-out supply. 4= Supply as assembly. 5= Check other tables.

05 Charger (508546036501)

No.	Item Code	Mark	Item Description	Qty.	Substitute	Note
1	508536510000		Charger48V9A (Asia)	1		SS
1	508536510001		Charger48V9A(Asia-ENG)	1		SS
1	508536510002		Charger48V9A(ENG)	1		SS
1	508536510003		Charger48V9A(US)	1		SS
1	508536510004		Charger48V9A(EU)	1		SS
1	508536510005		Charger48V9A(AUS)	1		SS
1	508536510006		Charger48V9A(ITA)	1		SS
1	508536510007		Charger48V9A(SWE)	1		SS
1	508536510008		Charger48V9A(ISR)	1		SS
1	508536510009		Charger48V9A(BRA)	1		SS
1	508536510010		Charger48V9A(ARG)	1		SS
1	508536510012		Charger48V9A(IND)	1		SS
1	508536510013		Charger48V9A(Asia)	1		SS
1	508536510014		Charger48V9A(ENG)	1		SS
1	508536510015		Charger48V9A(US)	1		SS
1	508536510016		Charger48V9A(EU)	1		SS
1	508536510017		Charger48V9A(AUS)	1		SS
1	508536510018		Charger48V9A(ITA)	1		SS
1	508536510019		Charger48V9A(SWE)	1		SS
1	508536510020		Charger48V9A(ISR)	1		SS
1	508536510021		Charger48V9A(BRA)	1		SS
1	508536510022		Charger48V9A(ARG)	1		SS
1.01	921000200397		Charger 48V9A (Aisa-CHN)	1		
1.01	921000200465		Charger 48V9A (Aisa-ENG)	1		
1.01	921000200399		Charger 48V9A (EU)	1		
1.01	921000200398		Charger 48V9A (USA)	1		
1.01	921000200591		Charger48V9A(Asia)	1		
1.01	921000200581		Charger48V9A(EU)	1		
1.01	921000200585		Charger48V9A(US)	1		
1.02	921500200050		Power Cord(ARG)	1		
1.02	921500200024		Power Cord(AUS)	1		

05 Charger (508546036501) Continuation

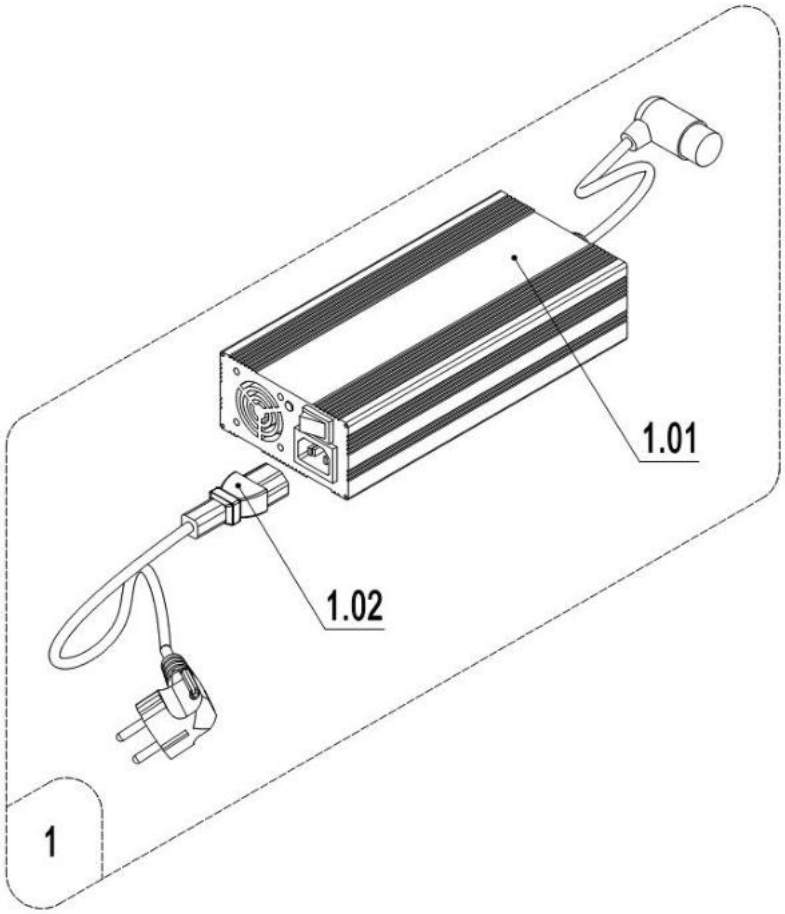

508546036501

1= Supply as package. 2= Supply with constraints. 3= Phasing-out supply. 4= Supply as assembly. 5= Check other tables.

05 Charger (508546036501)Continuation

No.	Item Code	Mark	Item Description	Qty.	Substitute	Note
1.02	921500200049		Power Cord(BRA)	1		
1.02	921500200023		Power Cord(USA)	1		
1.02	921500200022		Power Cord(EU)	1		
1.02	921500200026		Power Cord(SWE)	1		
1.02	921500200028		Power Cord(ISR)	1		
1.02	921500200025		Power Cord(ITA)	1		
1.02	921500200047		Power Cord(IDN)	1		
1.02	921500200027		Power Cord(ENG)	1		

06 Traction Battery (508546037001)

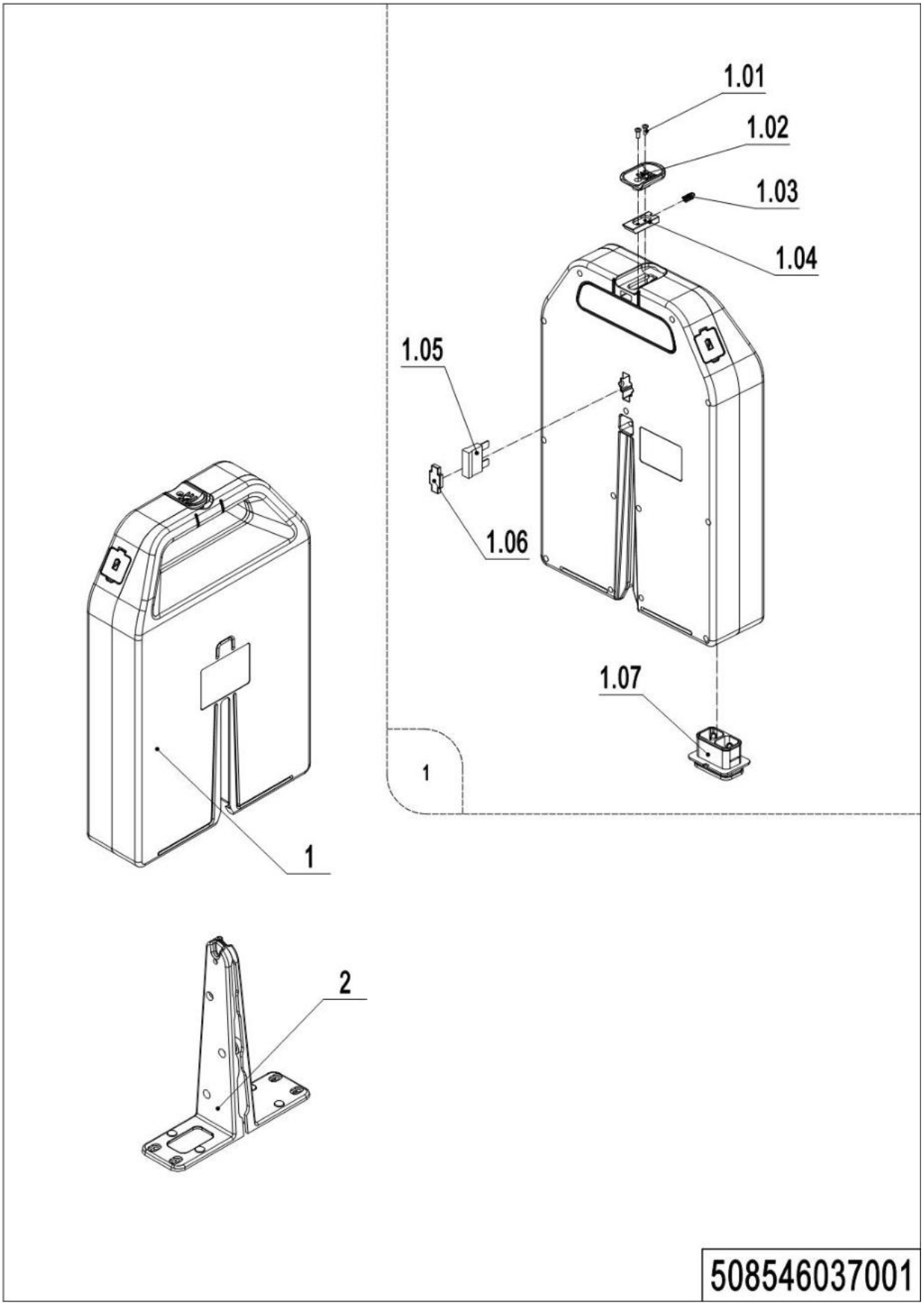

1= Supply as package. 2= Supply with constraints. 3= Phasing-out supply. 4= Supply as assembly. 5= Check other tables.

06 Traction Battery (508546037001)

No.	Item Code	Mark	Item Description	Qty.	Substitute	Note
1	508537010001		Li Battery48V20Ah	1		HF
1	508537010002		Li Battery48V20Ah	1		FDE
1	508537010006		Li Battery48V20Ah	1		XNL
1	508537010003		Li Battery 48V20Ah	1		FDE,EN1175-2020
1.01	910200500011	1	Screw	2		
1.02	508098520022		Plastic Handle	1		
1.03	508098520024		Spring	1		
1.04	508098520023		Fixing Mount	1		
1.05	920100200006		Fuse	1		
1.06	508098520021		waterproof plug	1		
1.07	508098510069		Rubber Cover	1		
2	508033010020		Battery Rack	1		

Chapter 6: Special Parts

01 Load Backrest(508546040501)

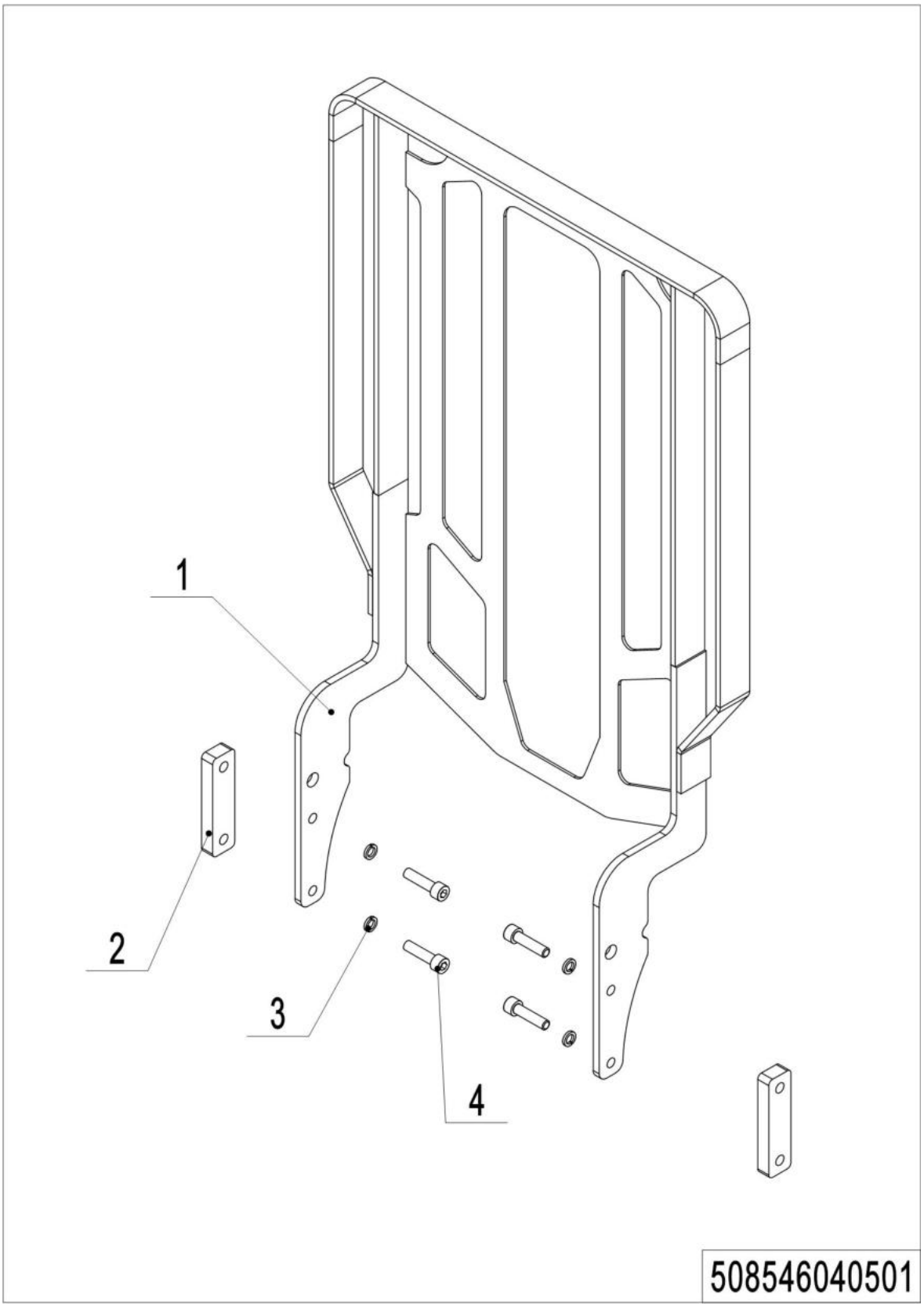

1= Supply as package. 2= Supply with constraints. 3= Phasing-out supply. 4= Supply as assembly. 5= Check other tables.

01 Load Backrest（508546040501）

No.	Item Code	Mark	Item Description	Qty.	Substitute	Note
1	508040510003		Load Backrest	1		
1	508040510004		Load Backrest	1		
1	508040510005		Load Backrest	1		
2	508040520000	1	Subplate	2		
3	910400500007	1	Spring Washer	4		
4	910200200079	1	Screw	4		

Chapter 7: Others

01 Labels and Decals-EU(508546047001)

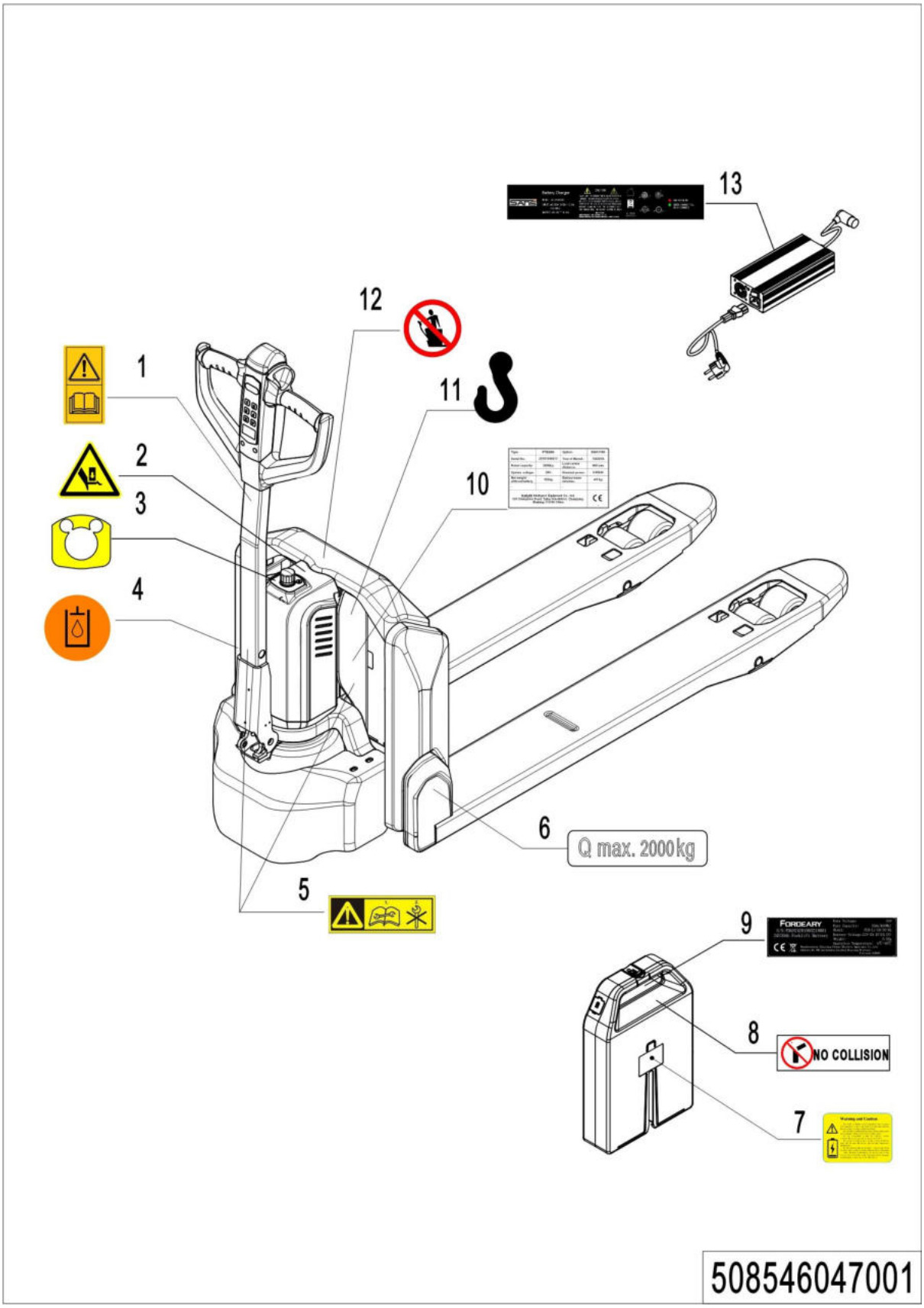

1= Supply as package. 2= Supply with constraints. 3= Phasing-out supply. 4= Supply as assembly. 5= Check other tables.

01 Labels and Decals-EU (508546047001)

No.	Item Code	Mark	Item Description	Qty.	Substitute	Note
1	941200300002		Label	1		
2	508047020007		Label	1		
3	508047020000		Label	1		
4	941200300003		Label	1		
5	508047020004		Label	2		
6	941200200023		Label	2		
7	508098520025		Label	1		
8	508047020002		Label	1		
9	508047020009		Label	1		
10	508547520000		Truck data plate	1		
11	941200300001		Label	2		
12	941200100003		Label	1		
13	508047520005		Label	1		

02 Labels and Decals-US (508546047002)

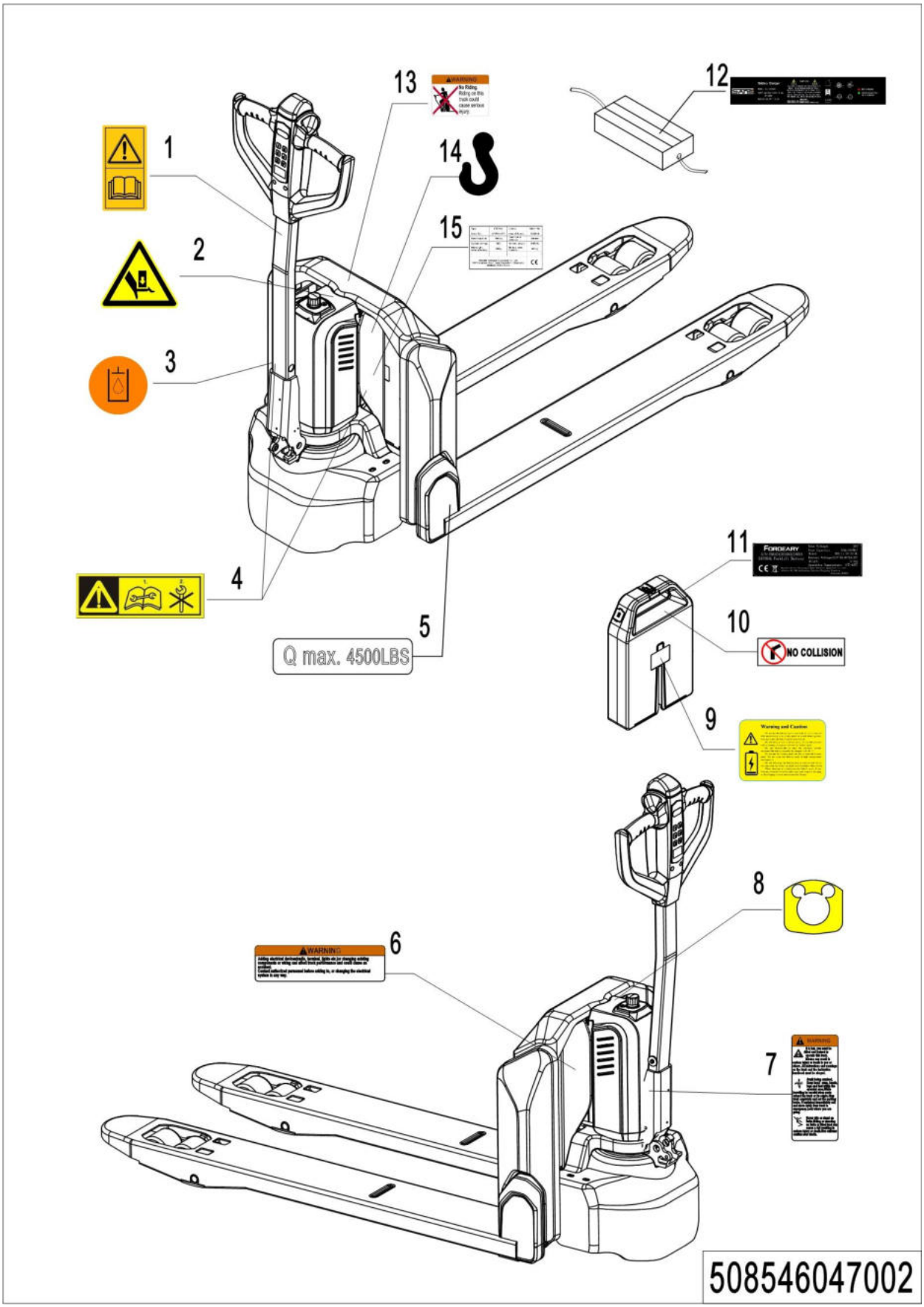

1= Supply as package. 2= Supply with constraints. 3= Phasing-out supply. 4= Supply as assembly. 5= Check other tables.

02 Labels and Decals-US(507946047002)

No.	Item Code	Mark	Item Description	Qty.	Substitute	Note
1	941200300002		Label	1		
2	508047020007		Label	1		
3	941200300003		Label	1		
4	508047020004		Label	2		
5	941200200050		Label	2		
6	941200100010		Label	1		
7	941200100009		Label	1		
8	508047020000		Label	1		
9	508098520025		Label	1		
10	508047020002		Label	1		
11	508047020009		Label	1		
12	508047520005		Label	1		
13	941200100011		Label	1		
14	941200300001		Label	2		
15	508547520002		Truck data plate	1		

Appendix

01 Electrical Circuit Diagram(508546045501)

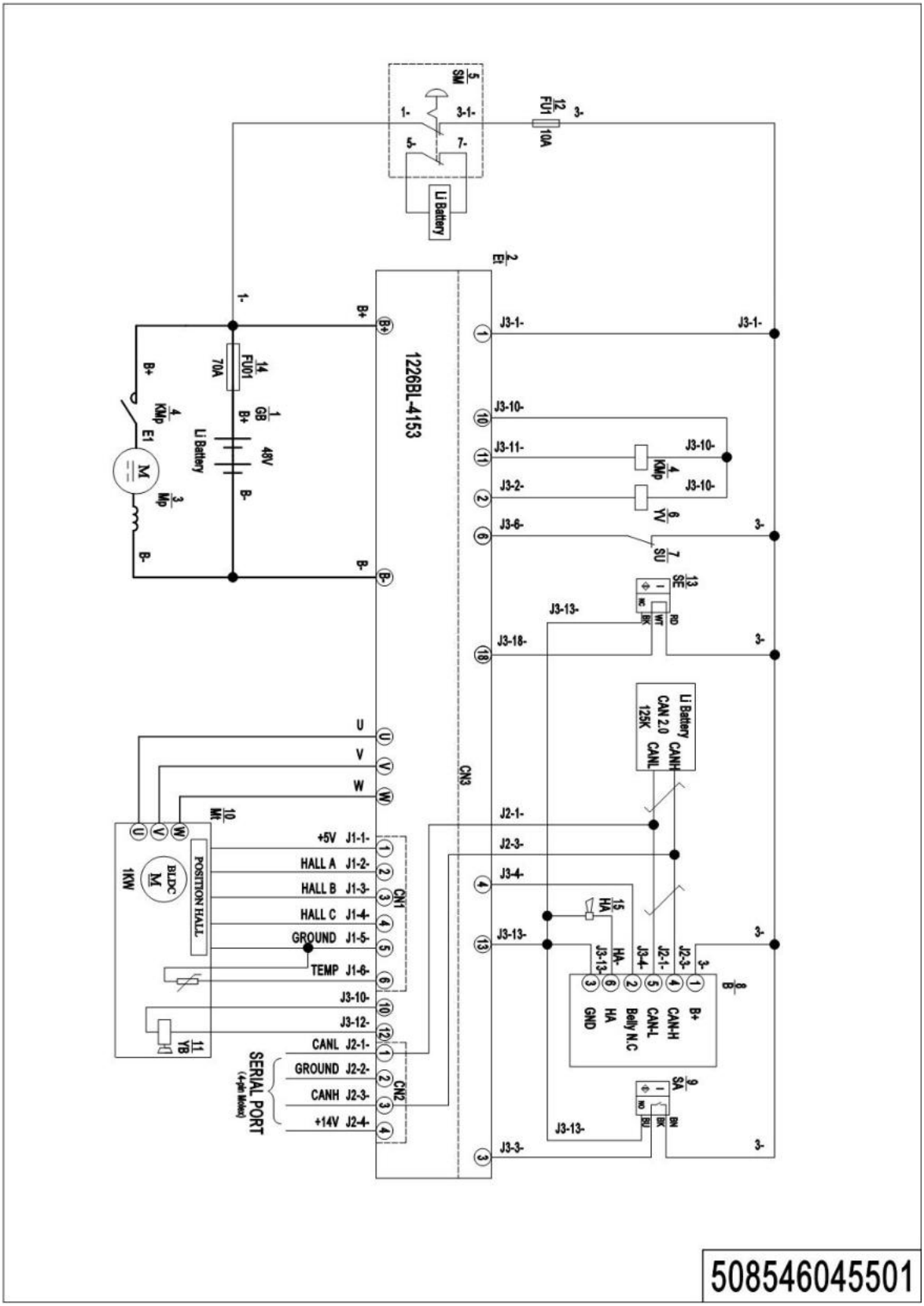

1= Supply as package. 2= Supply with constraints. 3= Phasing-out supply. 4= Supply as assembly. 5= Check other tables.

02 Electrical Circuit Diagram (EN1175-2020)(508546045502)

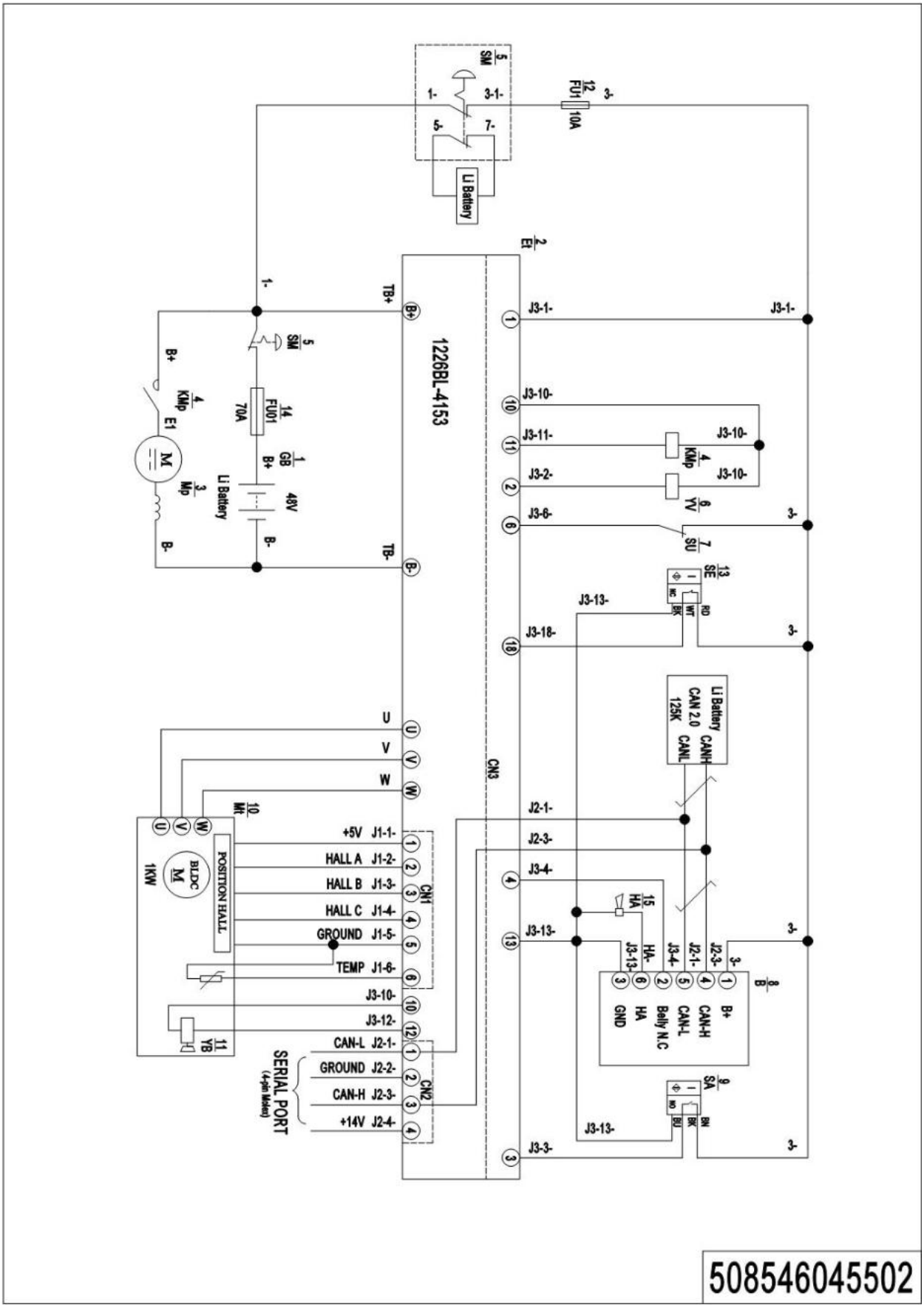

03 Hydraulic Circuit Diagram(508046045502)

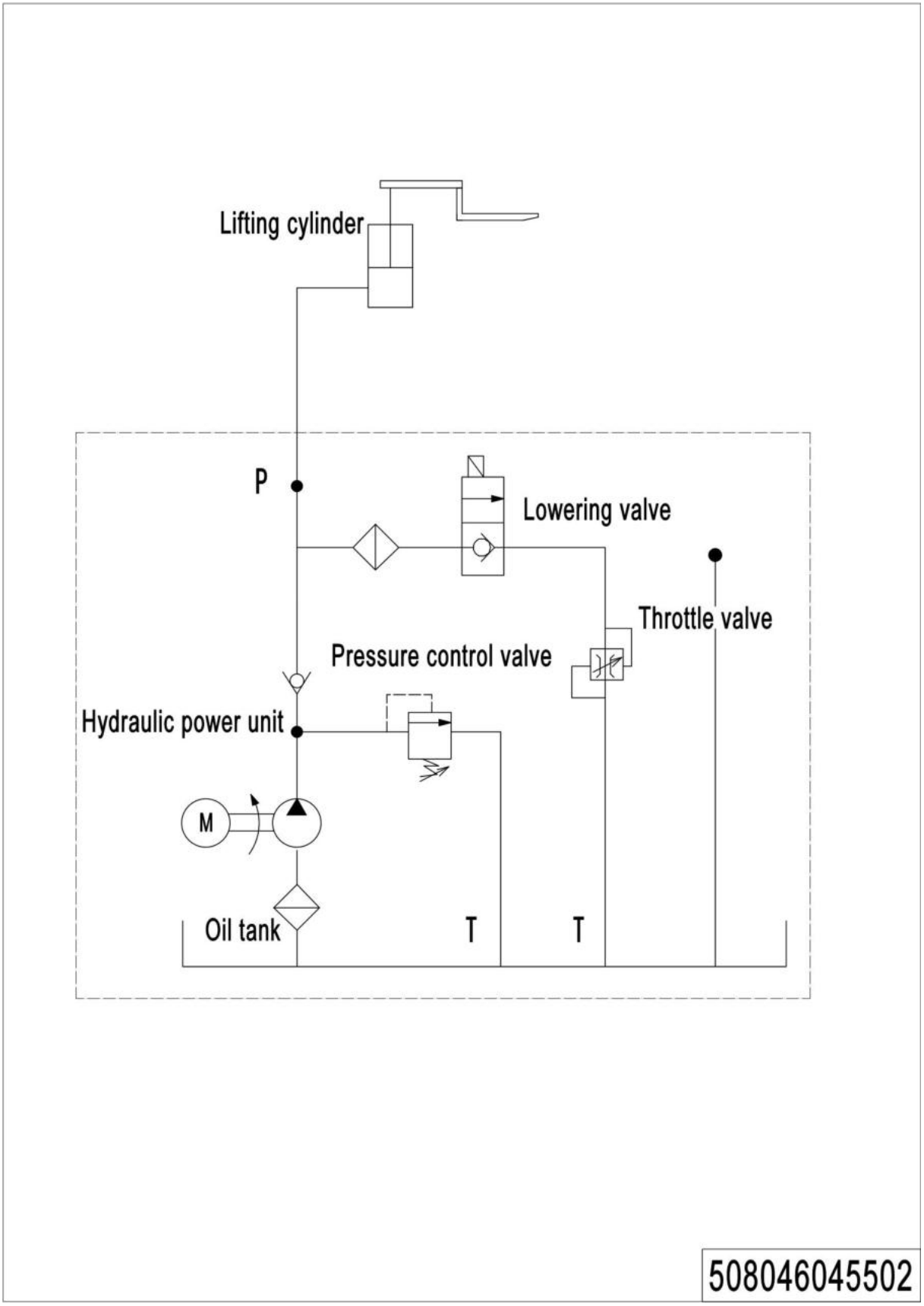

04 Consumable Parts List(508546045502)

No.	Item Code	Item Description	Qty.	Chapter/ Section/ Number
1	508598510002	Proximity Switch	1	Chapter 1/01/13
2	508598510005	Seal Kit	1	Chapter 2/01/10
3	508598510004	Seal Kit	1	Chapter 2/02/11
4	940500100098	Bushing	4	Chapter 3/01/04
5	940500100096	Bushing	2	Chapter 3/01/19
6	940500100098	Bushing	4	Chapter 3/02/04
7	940500100096	Bushing	2	Chapter 3/02/19
8	940500200001	Bushing	2	Chapter 4/01/06
9	920200400026	Proximity Switch	1	Chapter 4/01/09
10	508011010001	Gas Spring	1	Chapter 4/01/10.03
11	508598520000	ID Card	1	Chapter 4/02/1.05
12	508598520000	ID Card	1	Chapter 4/03/1.06
13	507698520001	ID Card	1	Chapter 4/05/1.06
14	940500200038	Bushing	4	Chapter 4/06/2.01
15	940500100088	Bushing	4	Chapter 4/06/2.08
16	920100200006	Fuse	1	Chapter 5/06/1.05

1= Supply as package. 2= Supply with constraints. 3= Phasing-out supply. 4= Supply as assembly. 5= Check other tables.