Print Number:　　Print Date:

NOBLELIFT

Scan QR Code for More

Service Hotline: 836115

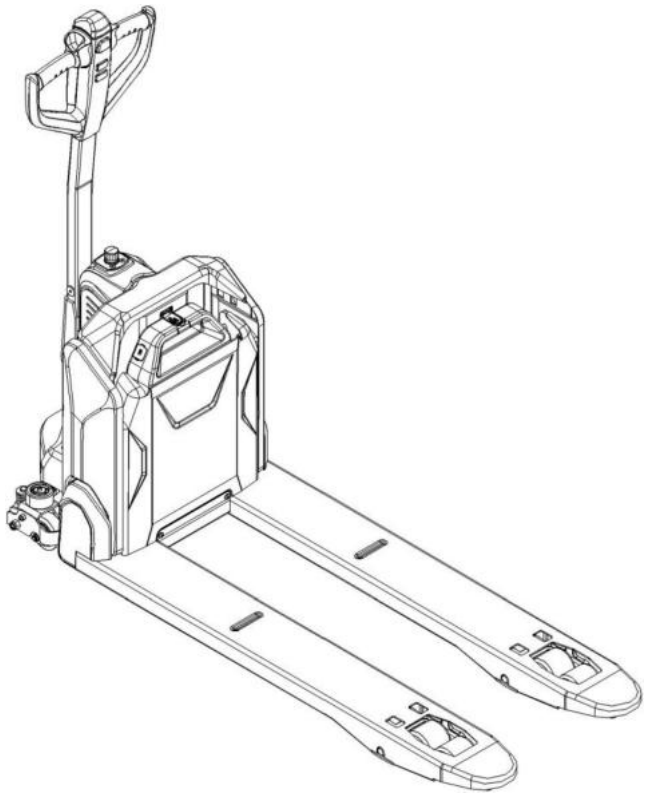

Electric Pallet Truck
PTE15N

PARTS MANUAL

508046020101

Version: V08

Truck Identification Number From:

Parts Manual

PTE15N-PM08EN

Please order spare parts from authorized dealers of Noblelift Intelligent Equipment Co., LTD.

In order to avoid wrong delivery, all the orders for spare parts should specify the following items:

- Truck model, identification number and manufacture year.
- Orders for spare parts of mast, hydraulic transmission unit, steering axle, motor, etc. shall indicate the manufacture number of these parts.
- Codes for Noblelift spare parts are shown in the table of parts manual. Please also pay attention to the description of supply status, order quantity, etc. (check the number listed in "Mark" column of the parts manual).

"Mark" Column:

The unmarked indicates the parts are in short supply cycle.

Number 1: supply as package. Indicating these that parts are small parts and seal parts, which are supplied in package unit and in short supply cycle.

Number 2: supply with constraints. Indicating that these spare parts are not in stock and will be prepared for production after receiving the order from customers, which are in long supply cycle.

Number 3: phasing-out supply. Indicating that these parts will be replaced by new parts due to technical improvements and the current stock will not be available when these parts run out. Please check the description of technical improvements notice.

Number 4: supply as assembly. Indicating that these parts are assembly parts defined by manufacture process, which cannot be supplied as a single part.

Number 5: check other tables.

This parts manual is the property of Noblelift and can be shared under the confidential agreement only, Noblelift has the right to claim for compensation of any unauthorized use. Copy without permission is not allowed. Figures in the manual are not limited by the original design. Noblelift Intelligent Equipment Co., LTD reserves the right to improve the products for continuous technology progress.

Table of Contents

Chapter 1: Drive System 5

01 Drive Unit Steering（508046013501） 5

01 Drive Unit Steering(508046013501）Continuation 7

02 Drive Assembly(508046013001) 9

03 Drive Assembly(YX Single bearing)（508046013002） 11

04 Drive Assembly (YX Double bearings)(508046013003) 13

05 Drive Assembly (YX210)(508046013004) 15

Chapter 2: Hydraulic System 17

01 Hydraulic Components(508046023501) 17

02 Hydraulic Components (EN1175-2020)(508046023502) 19

Chapter 3: Truck Frame 21

01 Truck Frame (508046038501) 21

01 Truck Frame (508046038501) Continuation 23

02 Truck Frame (508046038502) 25

02 Truck Frame (508046038502) Continuation 27

Chapter 4: Steering System, Braking System, Wheels 29

01 Tiller Unit(508046011001) 29

02 Control Handle (508046011002) 31

03 Control Handle(EN1175-2020)（508046011003） 33

04 Control Handle(SJ) (508046011004) 35

05 Load Wheel（508046017001） 37

06 Caster（508046016501） 39

07 Caster(without)（508046016502） 41

Chapter 5: Electrical Parts 43

01 Wire Harness (508046033001) 43

02 Wire Harness(EN1175-2020)(508046033003) 45

03 Controller (508046033002) 47

04 Controller(EN1175-2020)(508046033004) 49

05 Charger (508046036501) 51

05 Charger (508046036501) Continuation1 53

05 Charger (508046036501) Continuation2 55

06 Traction Battery 24V20Ah (508046037001) 57

07 Traction Battery 24V36Ah (508046037002) 59

Chapter 6: Special Parts 61

01 Load Backrest（508046040501） 61

Chapter 7: Others 63

01 Labels and Decals-EU(508046047001) 63

02 Labels and Decals-US (508046047002) 65

Appendix 67

01 Electrical Circuit Diagram(508046045501) 67

02 Electrical Circuit Diagram (EN1175-2020)(508046045504) 68

03 Hydraulic Circuit Diagram(508046045502) 69

04 Consumable Parts List 70

Chapter 1: Drive System

01 Drive Unit Steering（508046013501）

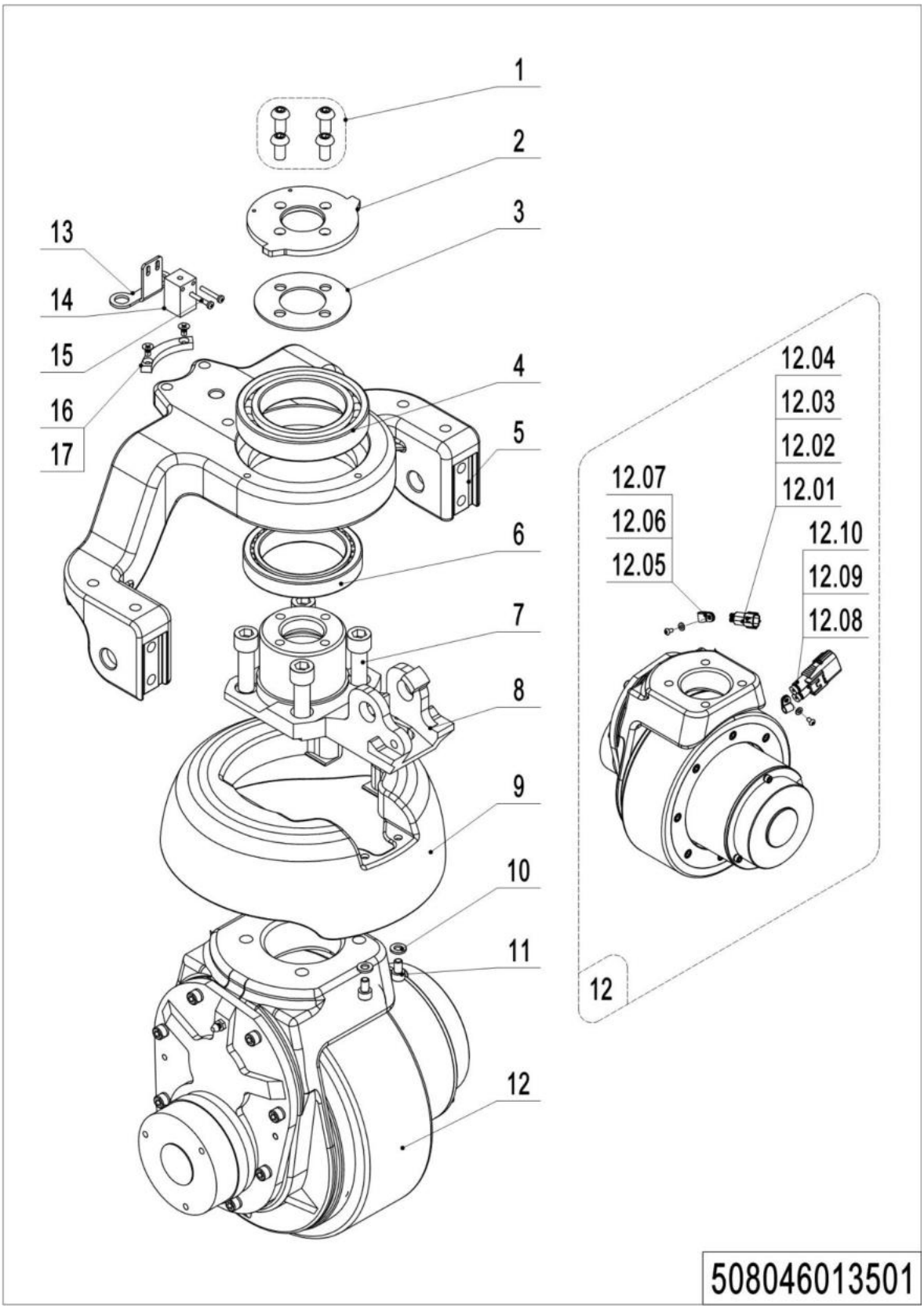

01 Drive Unit Steering (508046013501)

No.	Item Code	Mark	Item Description	Qty.	Substitute	Note
1	910200300024	1	Screw	4		
2	508013520003		Bearing Plate	1		
3	508013520004		Subplate	1		
4	910700200058	1	Bearing	1		
5	508013520000		Wheel Mount	1		
6	910700600044		Bearing	1		
7	910200200076	1	Screw	4		
8	508013520001		Flange	1		
9	508013520101		Cover	1		Be sure to color your order
10	910400100005	1	Flat Washer	2		
11	910200200033	1	Screw	2		
12	508098510014		Drive Unit(ZD,6NMPU)	1		ZD
12	508098510078		Drive Unit(ZD,6NMPU)	1		ZD, Waterproof
12	508098510052		Drive Unit(ZD,6NMPU)	1		ZD, Non-slip
12	508098510079		Drive Unit(ZD,6NMPU)	1		ZD, Non-slip (Water proof)
12	508098510080		Drive Unit(INTORQ,8NMPU)	1		ZD
12	508098510057		Drive Unit(INTORQ,8NMPU)	1		ZD, Waterproof
12	508098510154		Drive Unit(STEKI,8NMPU)	1		ZD
12	508098510082		Drive Unit(INTORQ,8NMPU)	1		ZD, Non-slip (Water proof)
12	508098510114		Drive Unit(XDL,8NMPU)	1		YX S-Bearing
12	508098510094		Drive Unit(XDL,8NMPU)	1		YX D-Bearings
12	508013510001		Drive Unit(STEKI,8NMPU)	1		YX210
12	508013510003		Drive Unit(XDL,8NMPU)	1		YX210
12	508013510002		Drive Unit(STEKI,8NMPU)	1		YX210, Waterproof
12	508013510004		Drive Unit(XDL,8NMPU)	1		YX210, Waterproof
12	508013510005		Drive Unit(STEKI,8NMPU)	1		YX210, Non-slip
12.01	920400200004	1	Connector	1		
12.02	920400200003	1	Connector	1		
12.03	920400200017	1	Connector	2		
12.04	920400200018	1	Connector	2		
12.05	910200700001	1	Screw	2		

1= Supply as package. 2= Supply with constraints. 3= Phasing-out supply. 4= Supply as assembly. 5= Check other tables.

01 Drive Unit Steering(508046013501）Continuation

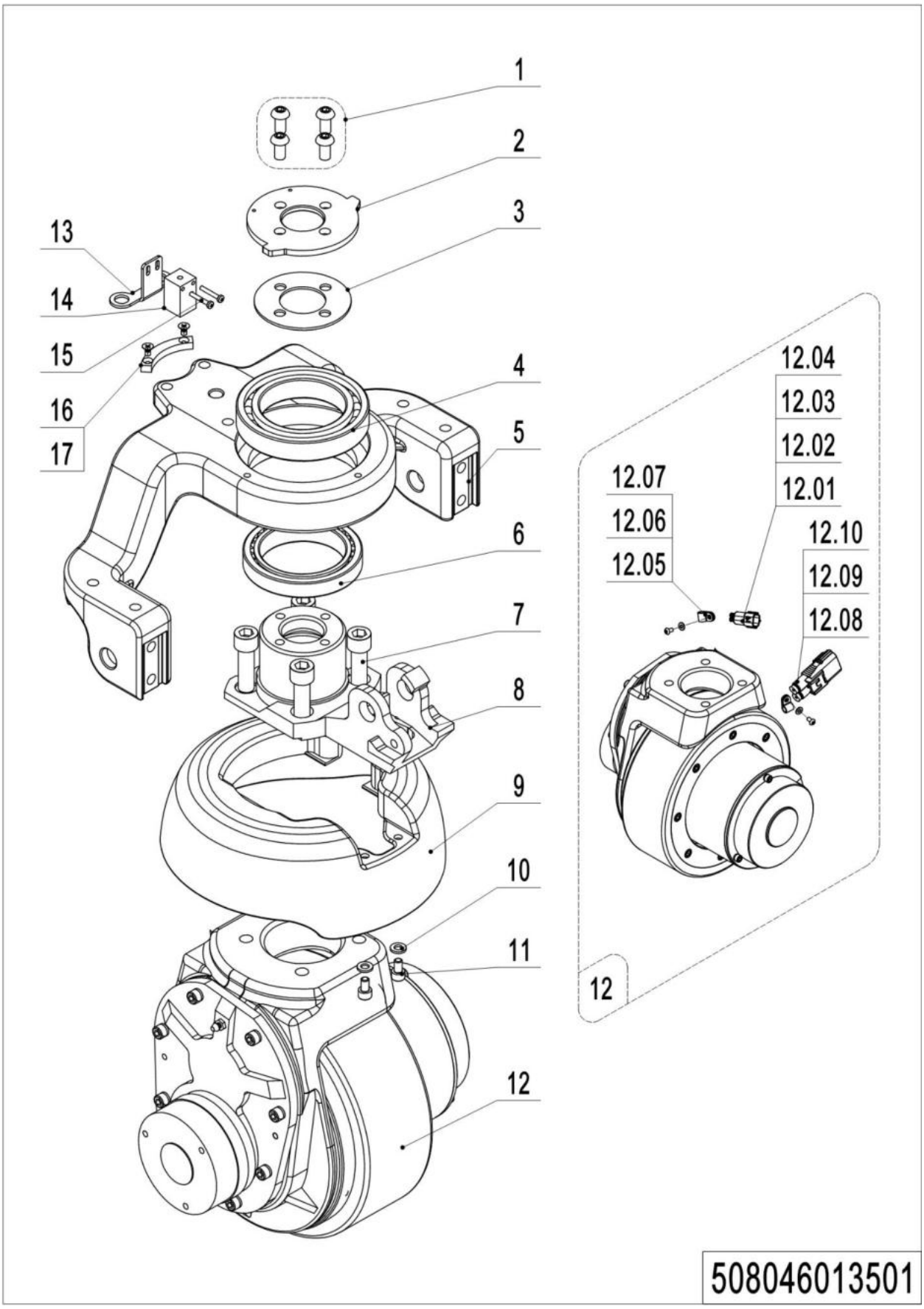

01 Drive Unit Steering (508046013501) Continuation

No.	Item Code	Mark	Item Description	Qty.	Substitute	Note
12.06	910400100003	1	Flat Washer	2		
12.07	921300200001		Cable Clamp	2		
12.08	920400200152	1	Connector	1		
12.08	920400200169	1	Connector	1		Waterproof
12.09	920400200150	1	Connector	2		
12.09	920400200172	1	Connector	2		Waterproof
12.10	920400200171	1	Connector	2		Waterproof
13	508033020003		Bracket	1		
14	920200400017		Proximity Switch	1		
15	910200500015	1	Screw	2		
16	508033020002		Induction Block	1		
17	910200700001	1	Screw	2		

02 Drive Assembly(ZD)(508046013001)

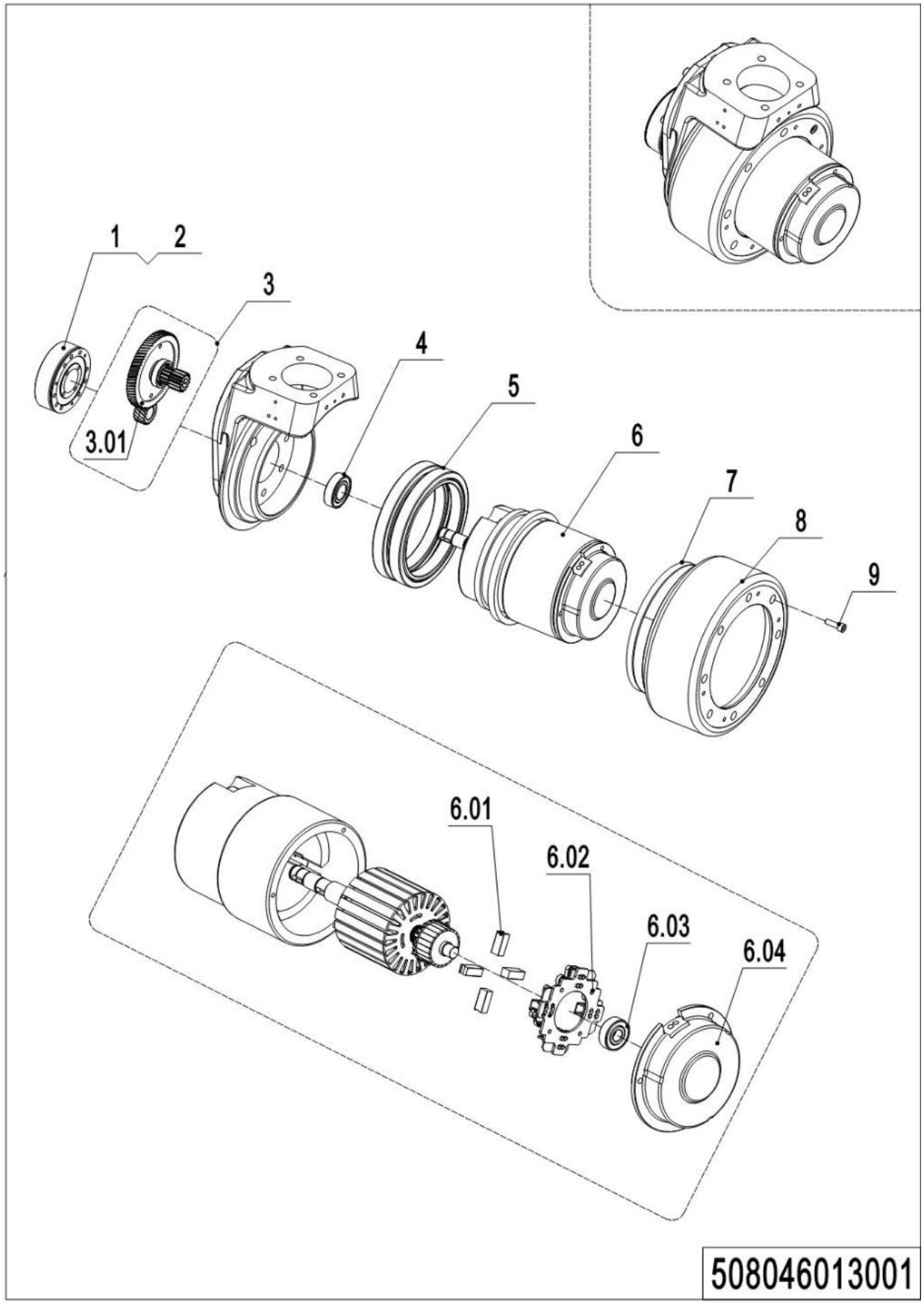

1= Supply as package. 2= Supply with constraints. 3= Phasing-out supply. 4= Supply as assembly. 5= Check other tables.

02 Drive Assembly(ZD) (508046013001)

No.	Item Code	Mark	Item Description	Qty.	Substitute	Note
1	508098520002	2	Brake	1		ZD,6NM
1	940700100015	2	Brake	1		STEKI,8NM
1	508098520028	2	Brake	1		INTORQ,8NM
1	961002200004	2	Brake	1		XDL,8NM
2	508098520040		Rubber Strip	1		
3	508098510015	2	Gear Components	1		
3.01	508098520004		Gear	1		
4	910700200004		Bearing	1		
5	508098520011	2	Gear Ring	1		
6	508098510016	2	Motor	1		
6	508098510071		Motor	1		Waterproof plug
6.01	508098520000	2	Carbon Brush	4		
6.02	508098520001	2	Carbon Brush Holder	1		
6.03	910700200016		Bearing	1		
6.04	508098520036	2	End Cap	1		
7	508098520032		Seal	1		
8	508098520003		Wheel	1		
8	508098520026		Wheel	1		Non-slip
9	910200200167		Screw Kits	8		

1= Supply as package. 2= Supply with constraints. 3= Phasing-out supply. 4= Supply as assembly. 5= Check other tables.

03 Drive Assembly(YX Single bearing)（508046013002）

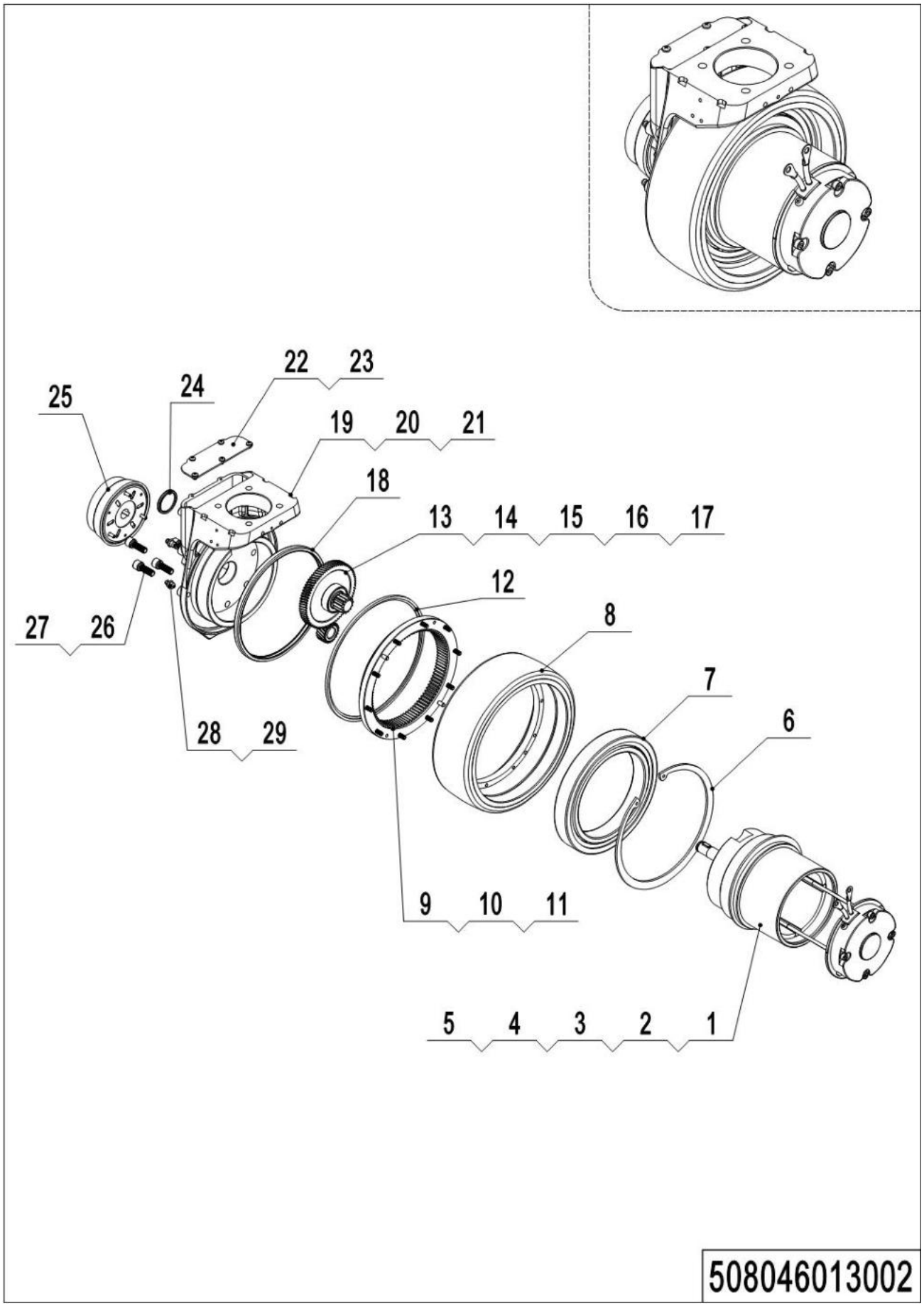

1= Supply as package. 2= Supply with constraints. 3= Phasing-out supply. 4= Supply as assembly. 5= Check other tables.

03 Drive Assembly(YX Single bearing) (508046013002)

No.	Item Code	Mark	Item Description	Qty.	Substitute	Note
1	508098510169	2	Motor	1		
2	910401300030		Circlip	1		
3	910600800005		Flat Key	2		
4	910401300006		Circlip	1		
5	910401300007		Circlip	1		
6	910401400015		Circlip	1		
7	910700200053		Bearing	1		
8	961000700008	2	Tyre	1		
9	961000700007		Gear	1		
10	941100400015	1	Screw,M5x14	10		
11	910600100010		Cylindrical Pin	2		
12	961000700009		Wiper Seal	1		
13	961000700003		Gear	1		
14	961000700004		Gear Shaft	1		
15	910600800006		Flat Key	1		
16	910700200057		Bearing	2		
17	961000700006		Gear	1		
18	961000700013		Oil Seal	1		
19	961000700001		Gearbox	1		
20	910401400014		Circlip	1		
21	961000700012		Oil Seal	1		
22	910200500020	1	Screw	5		
23	961000700002		Cover	1		
24	961000700005		Cover	1		
25	961000700011		Brake	1		
26	910200200147	1	Screw	5		
27	910400500019	1	Spring Washer	5		
28	911200100003		Oil Cup	2		
29	910800900010		Bonded Washer	2		

1= Supply as package. 2= Supply with constraints. 3= Phasing-out supply. 4= Supply as assembly. 5= Check other tables.

04 Drive Assembly (YX Double bearings)(508046013003)

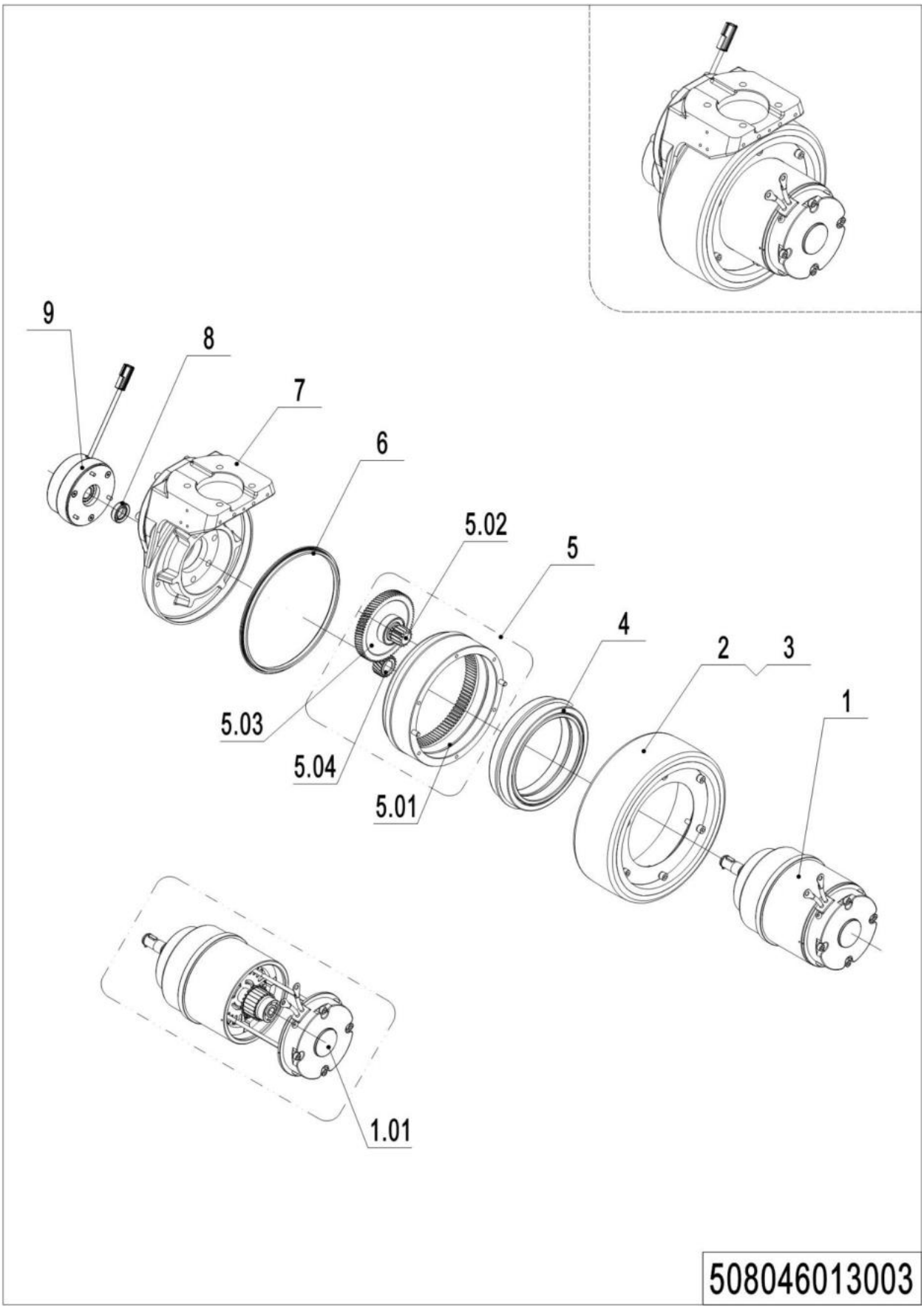

1= Supply as package. 2= Supply with constraints. 3= Phasing-out supply. 4= Supply as assembly. 5= Check other tables.

04 Drive Assembly (YX Double bearings)(508046013003)

No.	Item Code	Mark	Item Description	Qty.	Substitute	Note
1	508098510168	2	Motor	1		
1.01	508098510013		End Cap Kits	1		
2	961001300010	2	Wheel	1		
3	910200200140	1	Screw	6		
4	910700200044		Bearing	2		
5	508098510025		Gear Components	1		
5.01	961001300008		Gear	1		
5.02	961001300005		Gear Shaft	1		
5.03	961001300002		Gear	1		
5.04	961000700006		Gear	1		
6	961001300007		Oil seal	1		
7	508098510027		Gearbox	1		
8	961000700012		Oil Seal	1		
9	961002200004		Brake	1		

1= Supply as package. 2= Supply with constraints. 3= Phasing-out supply. 4= Supply as assembly. 5= Check other tables.

05 Drive Assembly (YX210)(508046013004)

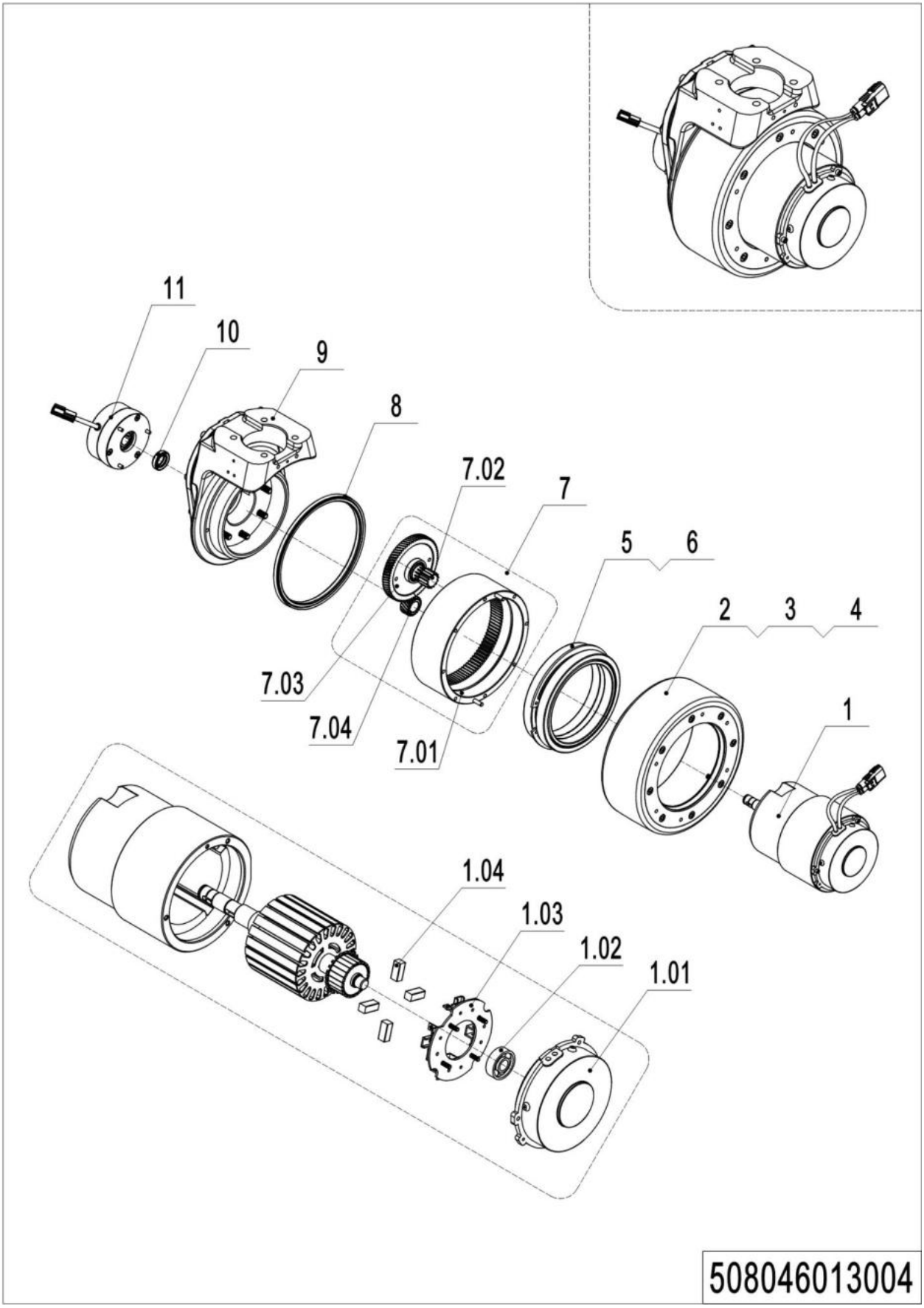

1= Supply as package. 2= Supply with constraints. 3= Phasing-out supply. 4= Supply as assembly. 5= Check other tables.

05 Drive Assembly (YX210) (508046013004)

No.	Item Code	Mark	Item Description	Qty.	Substitute	Note
1	508098510162		Motor	1		
1	508098510158		Motor	1		Waterproof plug
1.01	507798520022		End Cap	1		
1.02	910700200016		Bearing	1		
1.03	507798520024		Carbon Brush Holder	1		
1.04	507798520023		Brush	4		
2	961004000009		Wheel	1		
2	961004200001		Wheel	1		Non-slip
3	961004000011		Oil seal	1		
4	910200200167		Screw	8		
5	910700200044		Bearing	2		
6	961004000007		Sleeve	1		
7	507798510006		Gear Components	1		
7.01	961004000006		Gear	1		
7.02	961004000003		Gear Shaft	1		
7.03	961004000002		Gear	1		
7.04	961004000005		Gear	1		
8	961004000010		Oil seal	1		
9	507798510007		Gearbox	1		
10	961000700012		Oil seal	1		
11	940700100015		Brake	1		STEKI
11	961002200004		Brake	1		XDL

Chapter 2: Hydraulic System

01 Hydraulic Components(508046023501)

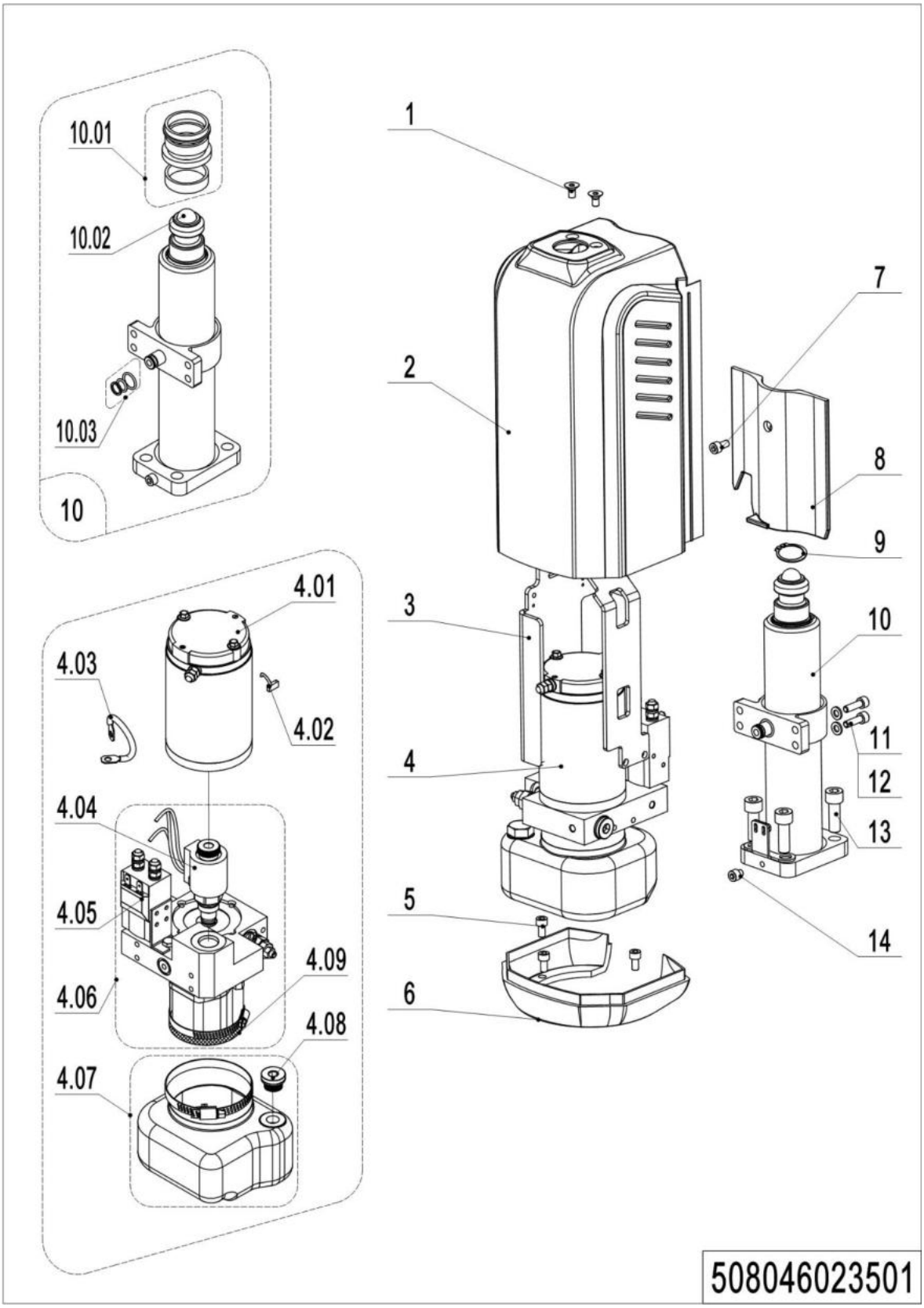

01 Hydraulic Components (508046023501)

No.	Item Code	Mark	Item Description	Qty.	Substitute	Note
1	910200400015	1	Screw	2		
2	508024020101		Cover	1		Be sure to color your order
3	508024010002		Mounting Rack	1		
4	508098510163		Pump Unit	1		
4.01	508098510020	2	Motor	1		
4.02	508098520008	2	Brush	1		
4.03	508098520007	2	Cables	1		
4.04	508098510034	2	Magnetic Valve	1		
4.05	508098510021	2	Switch	1		
4.06	508098510053	2	Gear Pump	1		
4.07	508098510023	2	Tank Kit	1		
4.08	508598510009	2	Filter	1		
4.09	508098520037	2	Filter	1		
5	910200200033	1	Screw	3		
6	508024020102		Shield	1		Be sure to color your order
7	910200200171	1	Screw	1		
8	508024020103		Cover	1		
9	910401300017	1	Circlip	1		
10	508024010003		Cylinder	1		
10.01	508098510018		Seal Kit	1		
10.02	910701100019		Steel Ball	1		
10.03	508598510004		Seal Kit	1		
11	910200200036	1	Screw	7		
12	910400100005	1	Flat Washer	7		
13	910200200077	1	Screw	4		
14	910200200160	1	Screw	1		

1= Supply as package. 2= Supply with constraints. 3= Phasing-out supply. 4= Supply as assembly. 5= Check other tables.

02 Hydraulic Components (EN1175-2020)(508046023502)

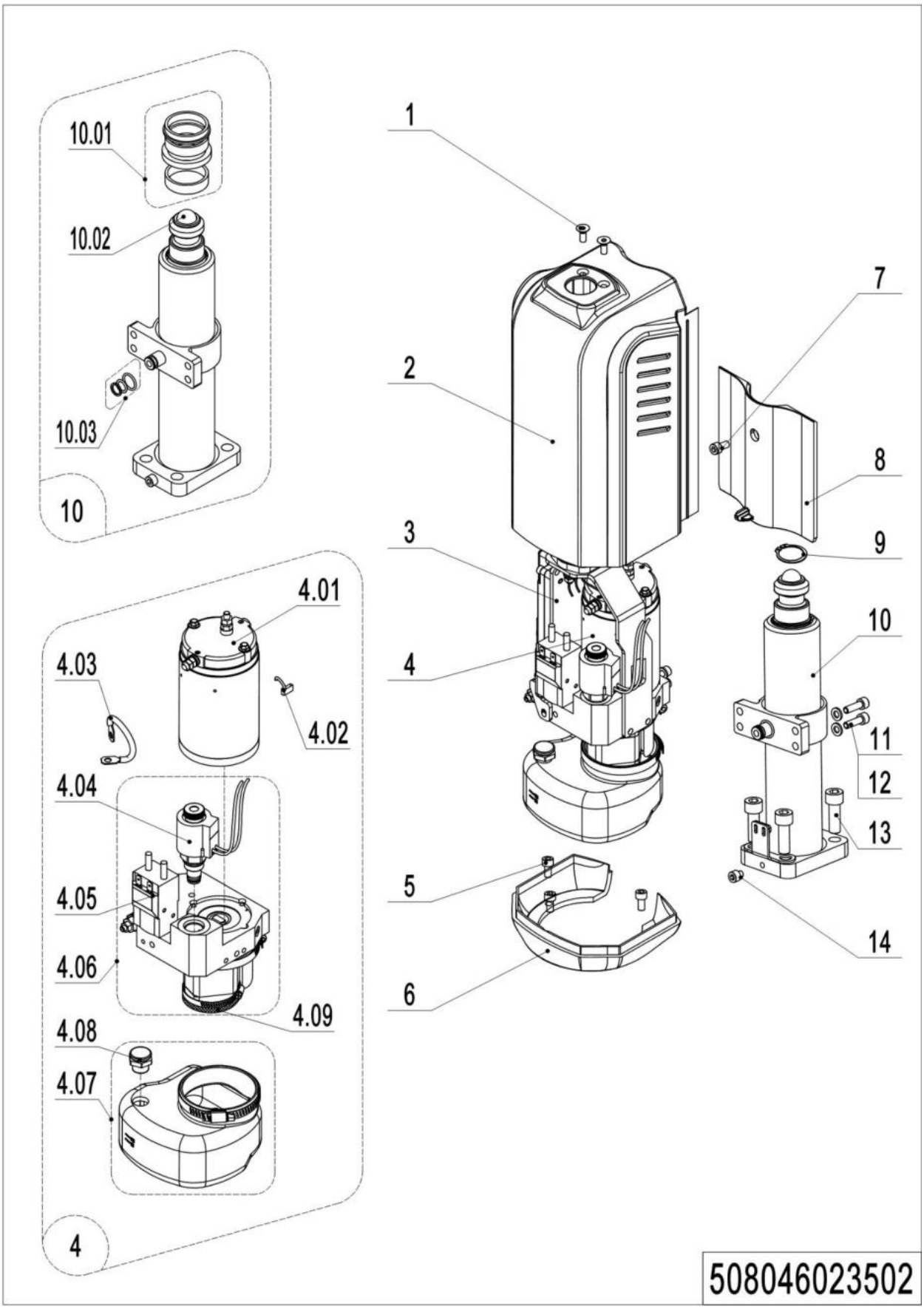

02 Hydraulic Components (EN1175-2020)(508046023502)

No.	Item Code	Mark	Item Description	Qty.	Substitute	Note
1	910200400053	1	Screw	2		
2	508024020101		Cover	1		Be sure to color your order
3	508024010007		Mounting Rack	1		
4	508098510170		Pump Unit	1		
4.01	508098510107	2	Motor	1		
4.02	508098520008	2	Brush	1		
4.03	508098520007	2	Cables	1		
4.04	508098510034	2	Magnetic Valve	1		
4.05	508098510021	2	Switch	1		
4.06	508098510108	2	Gear Pump Kits	1		
4.07	508098510118	2	Tank Kits	1		
4.08	508098510009	2	Cap-Tank	1		
4.09	508098520037	2	Filter	1		
5	910200200033	1	Screw	3		
6	508024020102		Shield	1		Be sure to color your order
7	910200200171	1	Screw	1		
8	508024020104		Cover	1		
9	910401300017	1	Circlip	1		
10	508024010003		Cylinder	1		
10.01	508098510018		Seal Kit	1		
10.02	910701100019		Steel Ball	1		
10.03	508598510004		Seal Kit	1		
11	910200200036	1	Screw	7		
12	910400100005	1	Flat Washer	7		
13	910200200077	1	Screw	4		
14	910200200160	1	Screw	1		

1= Supply as package. 2= Supply with constraints. 3= Phasing-out supply. 4= Supply as assembly. 5= Check other tables.

Chapter 3: Truck Frame

01 Truck Frame (508046038501)

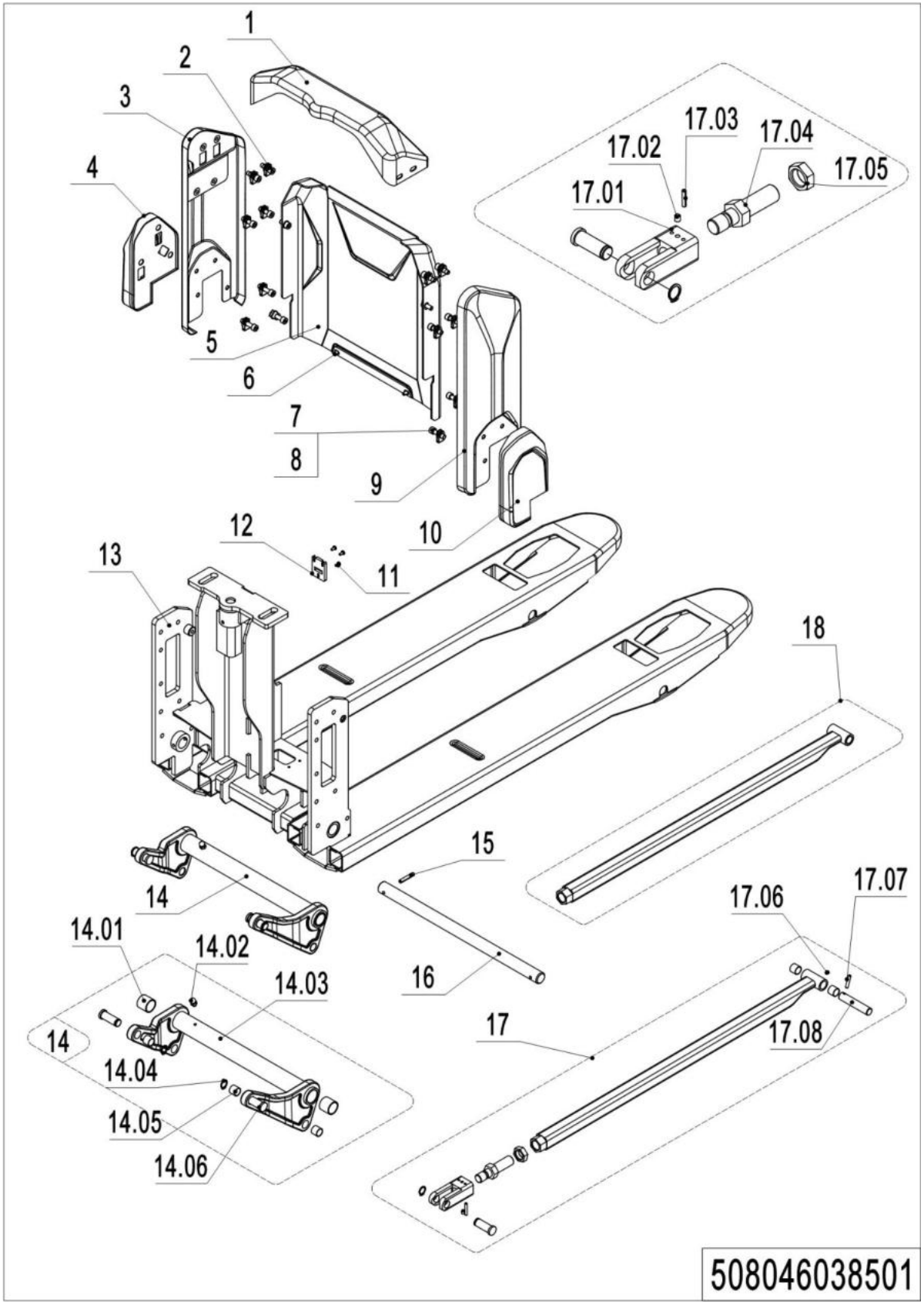

01 Truck Frame (508046038501)

No.	Item Code	Mark	Item Description	Qty.	Substitute	Note
1	508038520100		Cover	1		Be sure to color your order
2	910200200181	1	Screw	4		
3	508038510100		Side cover(left)	1		Be sure to color your order
4	508038510102		Side Cover(left 540)	1		Be sure to color your order
4	508038510106		Side Cover(left 61mm/ 540)	1		Be sure to color your order
5	508038520111		Front Panel	1		Be sure to color your order
6	910200500051	1	Screw	2		
7	940400400002		Cage Nut	14		
8	910200200157	1	Screw	10		
9	508038510101		Side cover(right)	1		Be sure to color your order
10	508038510103		Side Cover(right 540)	1		Be sure to color your order
10	508038510107		Side Cover(right61mm/ 540)	1		Be sure to color your order
11	910200500034	1	Screw	3		
12	508038520109		Lock	1		
13	508038510004	2	Chassis(US540x800)	1		
13	508038530001	2	Chassis(540x915)	1		
13	508038510005	2	Chassis(540x1000)	1		
13	508038510000	2	Chassis(US540x1150)	1		
13	508038510009	2	Chassis(540x1220)	1		
13	508038510003	2	Chassis(US550x1150)	1		
13	508038510021	2	Chassis(61mm/540x1220)	1		Selection of 61mm height
14	508098510001		Rise Arm	1		540
14	508098510083		Rise Arm	1		550
14.01	940500100097		Bushing	2		
14.02	911200100002		Oil Cup	1		
14.03	508038510010		Rise Arm	1		540
14.03	508038510019		Rise Arm	1		550
14.04	910401300007		Circlip	4		
14.05	940500100083		Bushing	8		
14.06	508038520041		Pin	4		
15	910600400041	1	Spring Pin	2		

1= Supply as package. 2= Supply with constraints. 3= Phasing-out supply. 4= Supply as assembly. 5= Check other tables.

01 Truck Frame (508046038501) Continuation

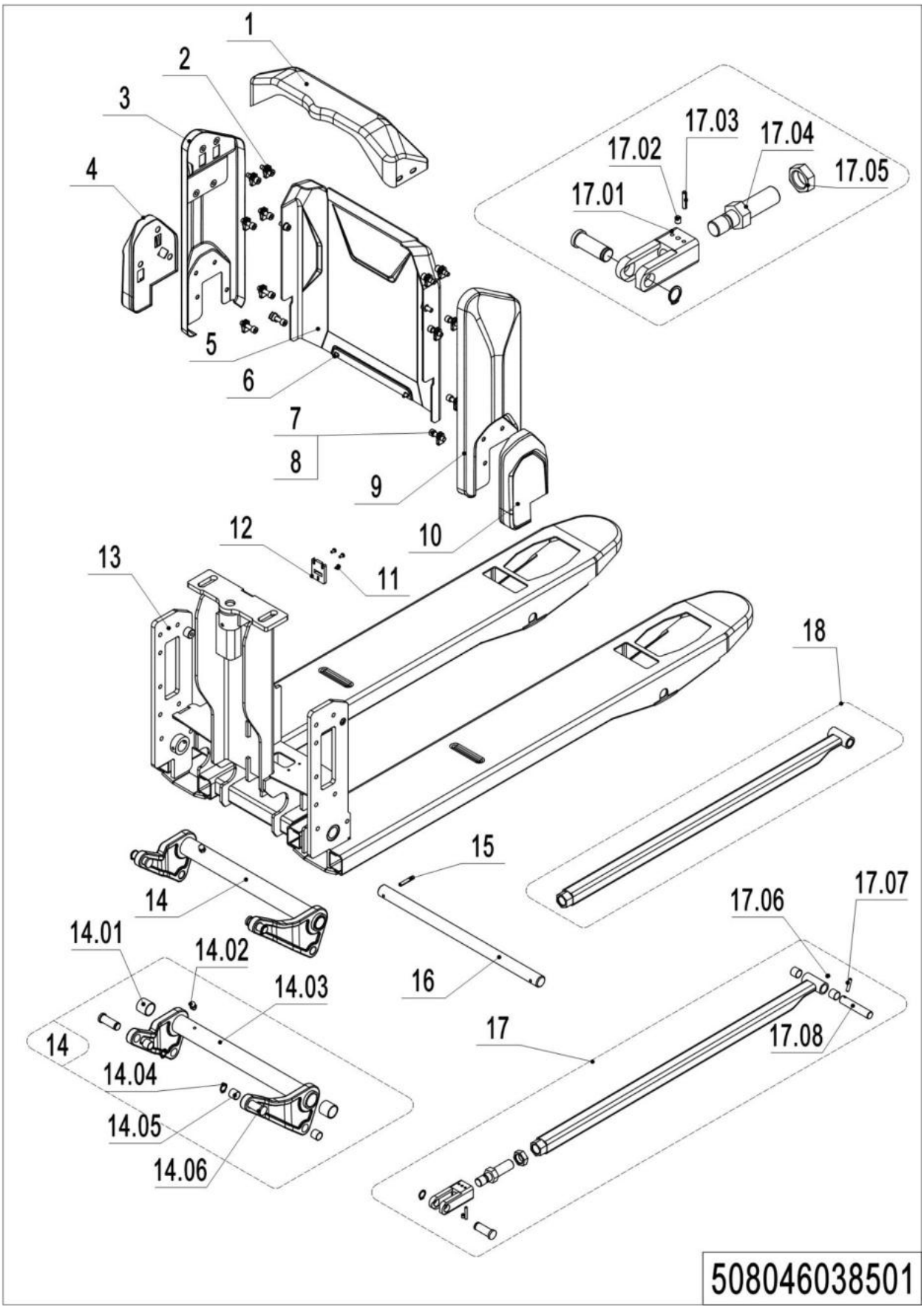

01 Truck Frame (508046038501) Continuation

No.	Item Code	Mark	Item Description	Qty.	Substitute	Note
16	508038520027		Axle	1		
17	508098510038		Push Rod Kit(800)	2		
17	508098510006		Push Rod Kit(915)	2		
17	508098510043		Push Rod Kit(1000)	2		
17	508098510002		Push Rod Kit(1150)	2		
17	508098510044		Push Rod Kit(1220)	2		
17.01	508038520028		Push Rod Fork	2		
17.02	910201000005	1	Screw	2		
17.03	910600500001	1	Spring Pin	4		
17.04	508038520029		Threaded Rod	2		
17.05	910300400008	1	Nut	2		
17.06	911200100001	1	Oil Cup	2		
17.07	910600400024	1	Spring Pin	2		
17.08	502338520030		Axle	2		
17.08	508038520104		Axle	2		Selection of 61mm
18	508038510016	2	Push Rod (800)	2		
18	508038510014	2	Push Rod (915)	2		
18	508038510017	2	Push Rod (1000)	2		
18	508038510011	2	Push Rod (1150)	2		
18	508038510024	2	Push Rod (1220)	2		
18	508038510022	2	Push Rod (1220)	2		Selection of 61mm

02 Truck Frame (508046038502)

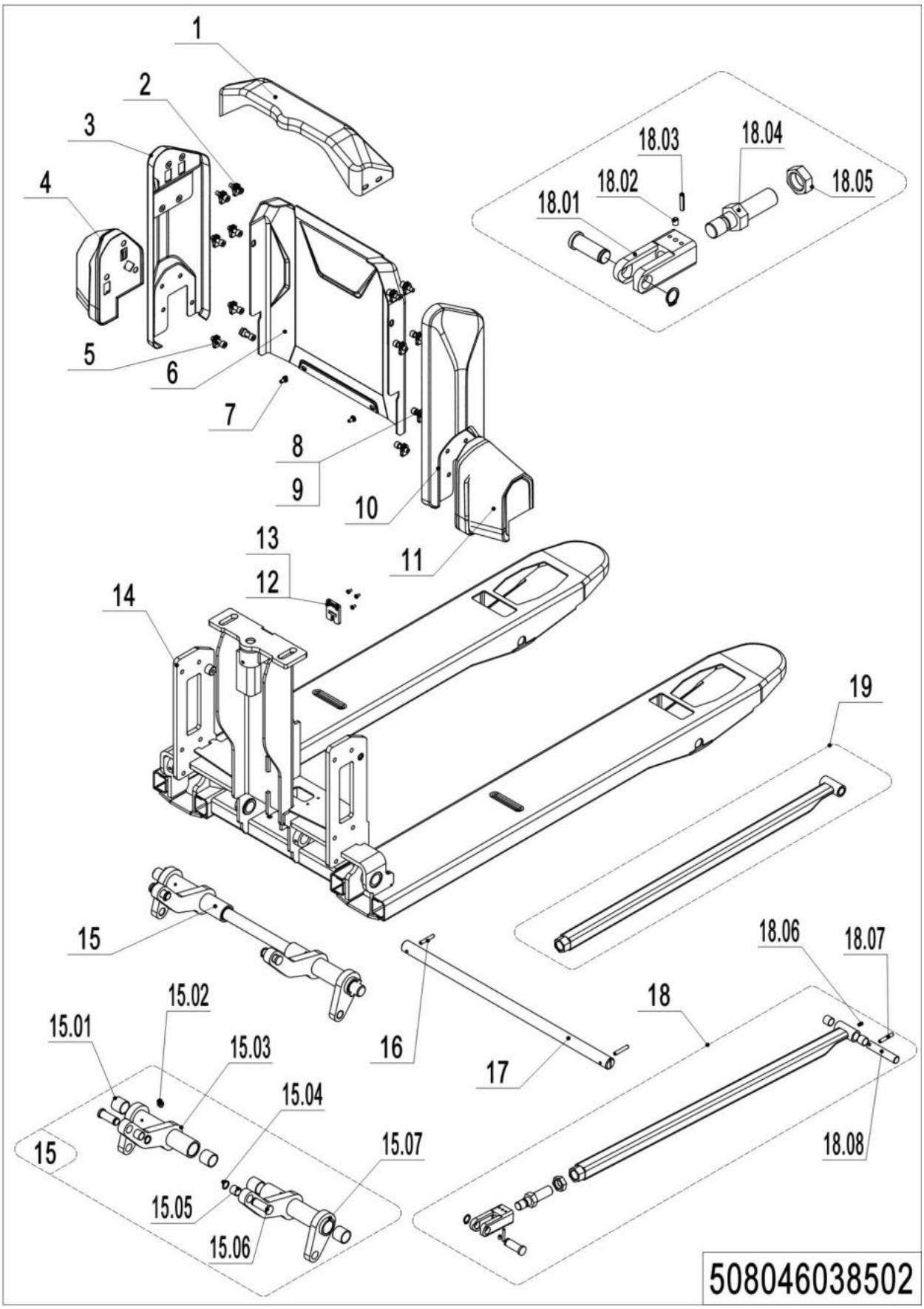

02 Truck Frame (508046038502)

No.	Item Code	Mark	Item Description	Qty.	Substitute	Note
1	508038520100		Cover	1		
2	910200200181	1	Screw	4		
3	508038510100		Side cover(left)	1		Be sure to color your order
4	508038510104		Side Cover(left 685)	1		Be sure to color your order
5	910200200170		Screw	4		
6	508038520111		Front Panel	1		Be sure to color your order
7	910200500051	1	Screw	2		
8	940400400002		Cage Nut	14		
9	910200200157	1	Screw	10		
10	508038510101		Side cover(right)	1		Be sure to color your order
11	508038510105		Side Cover(right 685)	1		Be sure to color your order
12	508038520109		Lock	1		
13	910200500034	1	Screw	3		
14	508038510008	2	Chassis(685x800)	1		
14	508038510002	2	Chassis(US685x915)	1		
14	508038510006	2	Chassis(685x1000)	1		
14	508038510001	2	Chassis(US685x1150)	1		
14	508038510025	2	Chassis(685x1220)	1		
15	508098510003		Rise Arm	1		
15.01	940500100097		Bushing	2		
15.02	911200100002	1	Oil Cup	2		
15.03	508038510012		Rise Arm	1		
15.03	508038510020		Rise Arm	1		Selection of 61mm height
15.04	910401300007		Circlip	4		
15.05	940500100083		Bushing	8		
15.06	508038520041		Pin	4		
15.07	508038510013		Rise Arm	1		
15.07	508038510023		Rise Arm	1		Selection of 61mm height
16	910600400041	1	Spring Pin	2		
17	508038520035		Axle	1		

1= Supply as package. 2= Supply with constraints. 3= Phasing-out supply. 4= Supply as assembly. 5= Check other tables.

02 Truck Frame (508046038502) Continuation

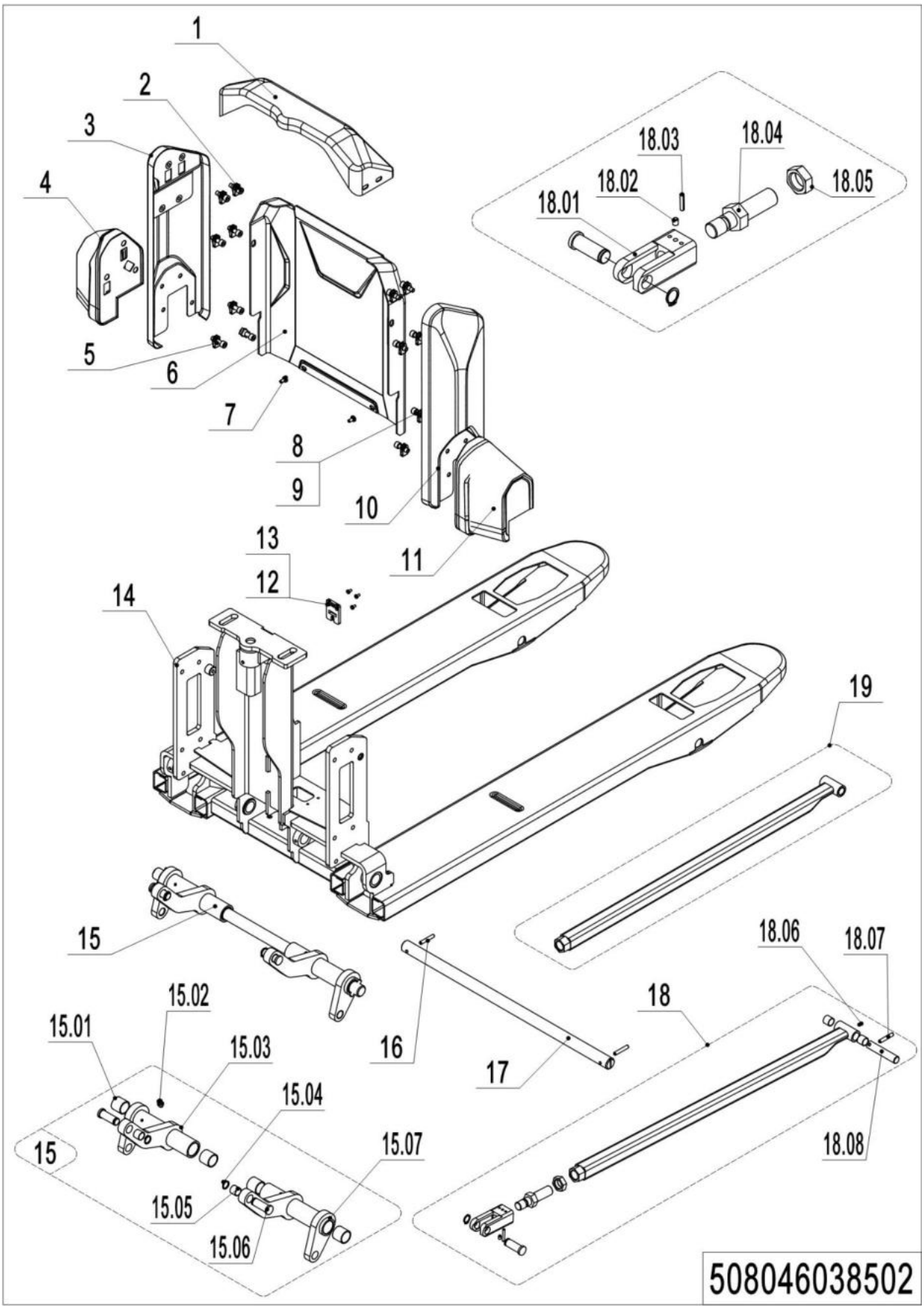

02 Truck Frame (508046038502) Continuation

No.	Item Code	Mark	Item Description	Qty.	Substitute	Note
18	508098510038		Push Rod Kit(800)	2		
18	508098510006		Push Rod Kit(915)	2		
18	508098510043		Push Rod Kit(1000)	2		
18	508098510002		Push Rod Kit(1150)	2		
18	508098510044		Push Rod Kit(1220)	2		
18.01	508038520028		Push Rod Fork	2		
18.02	910201000005	1	Screw	2		
18.03	910600500001	1	Spring Pin	4		
18.04	508038520029		Threaded Rod	2		
18.05	910300400008	1	Nut	2		
18.06	911200100001	1	Oil Cup	2		
18.07	910600400024	1	Spring Pin	2		
18.08	502338520030		Axle	2		
19	508038510016	2	Push Rod (800)	2		
19	508038510014	2	Push Rod (915)	2		
19	508038510017	2	Push Rod (1000)	2		
19	508038510011	2	Push Rod (1150)	2		
19	508038510024	2	Push Rod (1220)	2		

Chapter 4: Steering System, Braking System, Wheels

01 Tiller Unit(508046011001)

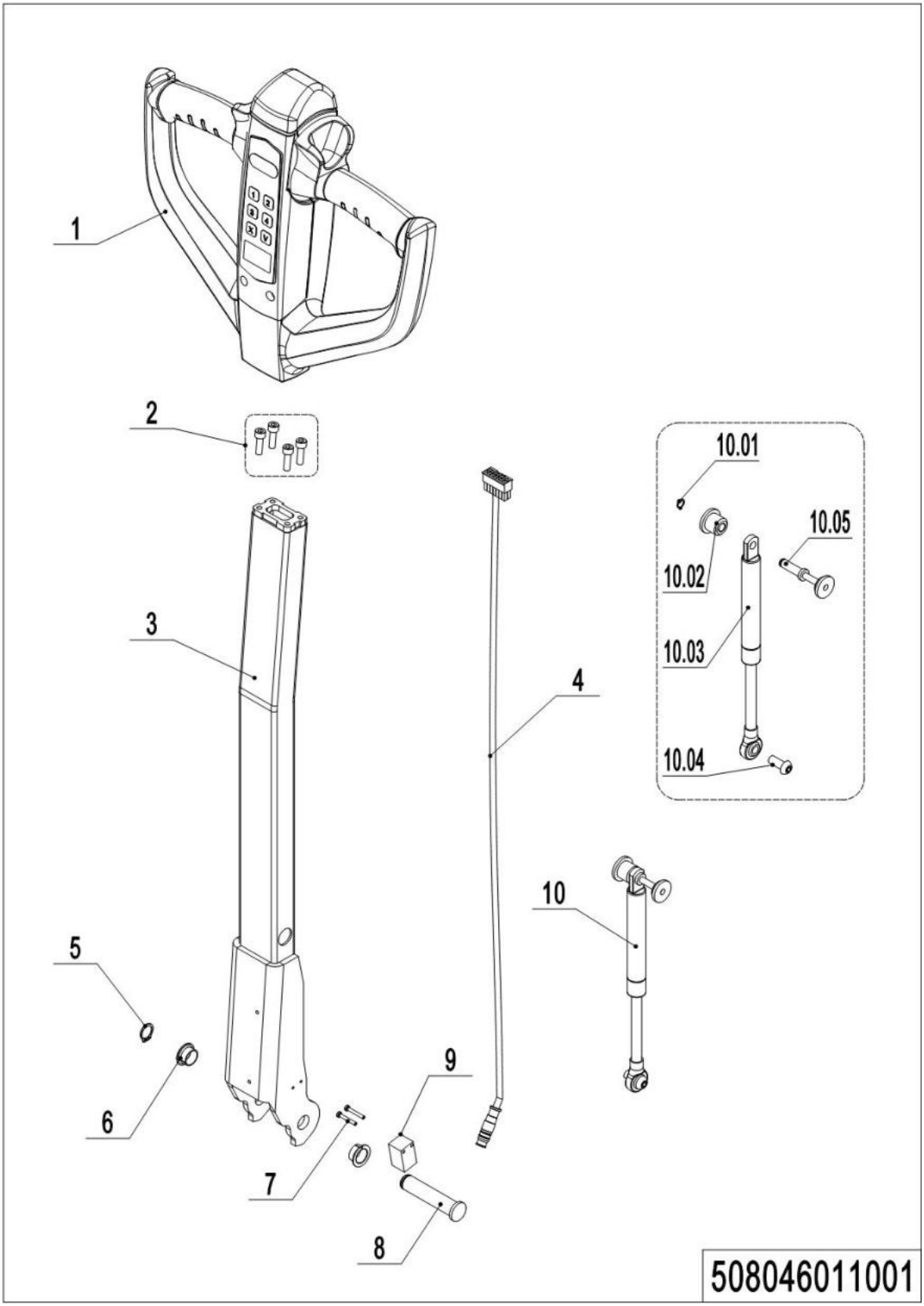

01 Tiller Unit(508046011001)

No.	Item Code	Mark	Item Description	Qty.	Substitute	Note
1	922100100013		Control Handle	1		DT
1	922100100019		Control Handle	1		DT, IC Card
1	922100100109		Control Handler	1		EN1175-2020
1	922100100168		Control Handler	1		SJ
2	910200200036	1	Screw	4		
3	508011010000		Tiller	1		
4	508033010001		Wire Harness	1		
4	508033010040		Wire Harness	1		EN1175-2020
5	910401300006		Circlip	1		
6	940500200001		Bushing	2		
7	941101100001	1	Screw	2		
8	508011020004		Pin	1		
9	920200400027		Proximity Switch	1		
10	508098510084		Gas Spring Kit	1		
10.01	910401300001		Circlip	1		
10.02	508011020005		Fixing Base	1		
10.03	508011010001		Gas Spring	1		
10.04	941100100011	1	Screw	1		
10.05	508011010002		Pin	1		

1= Supply as package. 2= Supply with constraints. 3= Phasing-out supply. 4= Supply as assembly. 5= Check other tables.

02 Control Handle (508046011002)

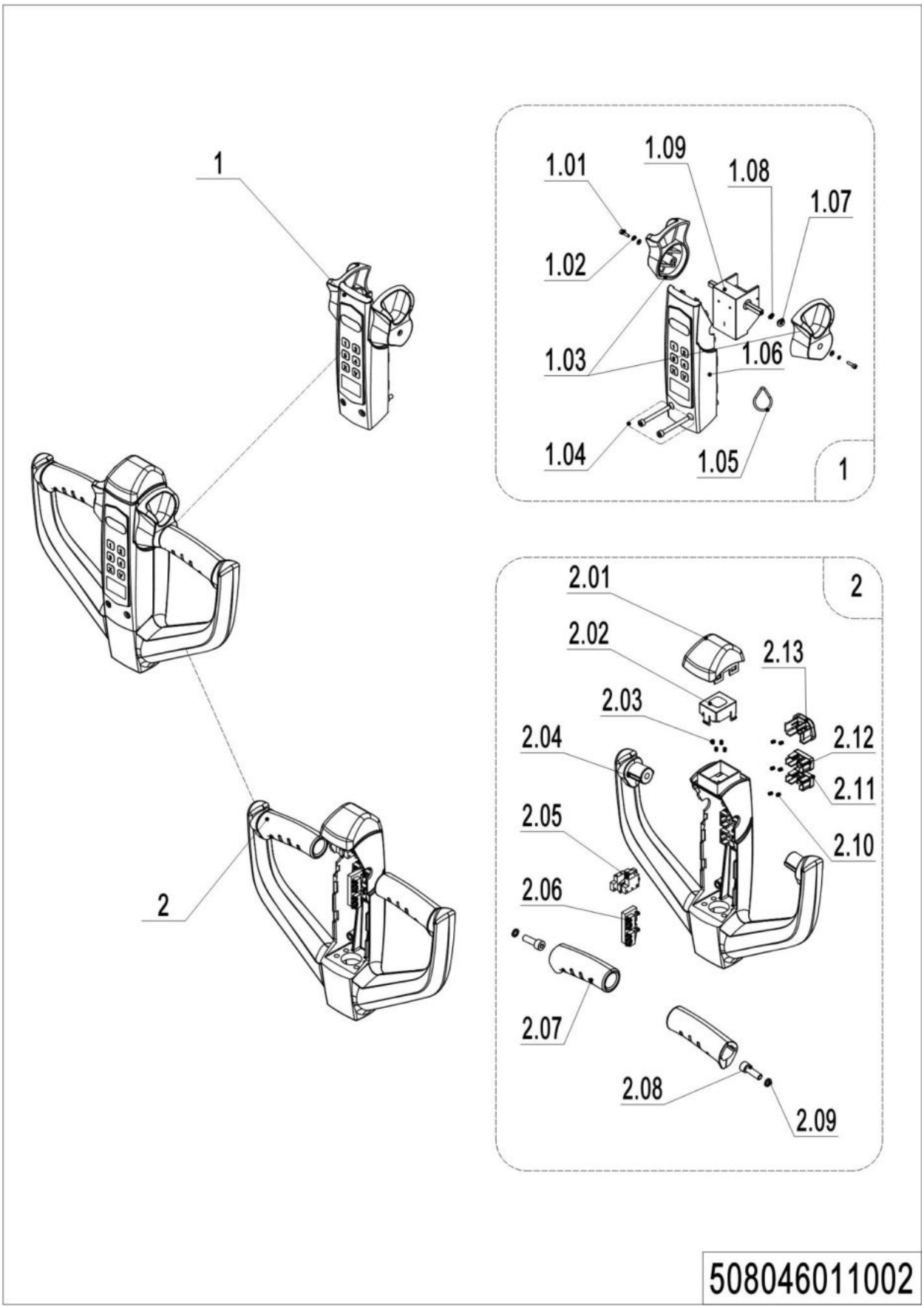

1= Supply as package. 2= Supply with constraints. 3= Phasing-out supply. 4= Supply as assembly. 5= Check other tables.

02 Control Handle (508046011002)

No.	Item Code	Mark	Item Description	Qty.	Substitute	Note
--	922100100013		Control Handle	1		DT
--	922100100019		Control Handle	1		DT, IC Card
1	508098510032		Handle Cap Kit	1		Be sure to color your order
1	508098510056		Handle Cap Kit	1		Be sure to color your order (IC Card)
1.01	508098520078	1	Screw	2		
1.02	910400500002	1	Spring Washer	2		
1.03	508098520044		Traction lever	1		
1.04	910200200159	1	Screw	2		
1.05	508098520027		ID Card	1		With a swipe function
1.06	508098510039		Display Screen kit	1		
1.07	508098520015		Bushing	1		
1.08	508098520016		Bushing	2		
1.09	508098510028		Accelerator	1		
1.09	508098510055		Accelerator	1		IC Card
2	508098510031		Handle Cap Kit	1		Be sure to color your order
2.01	508098520018		Cap,Break Switch	1		
2.02	508098520019		Bracket	1		
2.03	502311020018		Spring	4		
2.04	508098520012		Handle Cap	1		Be sure to color your order
2.05	508098510029		Microswitch Kits	1		
2.06	508098510030		Microswitch Kits	1		
2.07	508098520013		Handle	2		Be sure to color your order
2.08	910200200058	1	Screw	2		
2.09	910400500006	1	Spring Washer	2		
2.10	502311020022		Spring	6		
2.11	508098520031		Button	1		Be sure to color your order
2.12	508098520030		Button	1		Be sure to color your order
2.13	508098520029		Horn Button	1		Be sure to color your order

03 Control Handle(EN1175-2020)（508046011003）

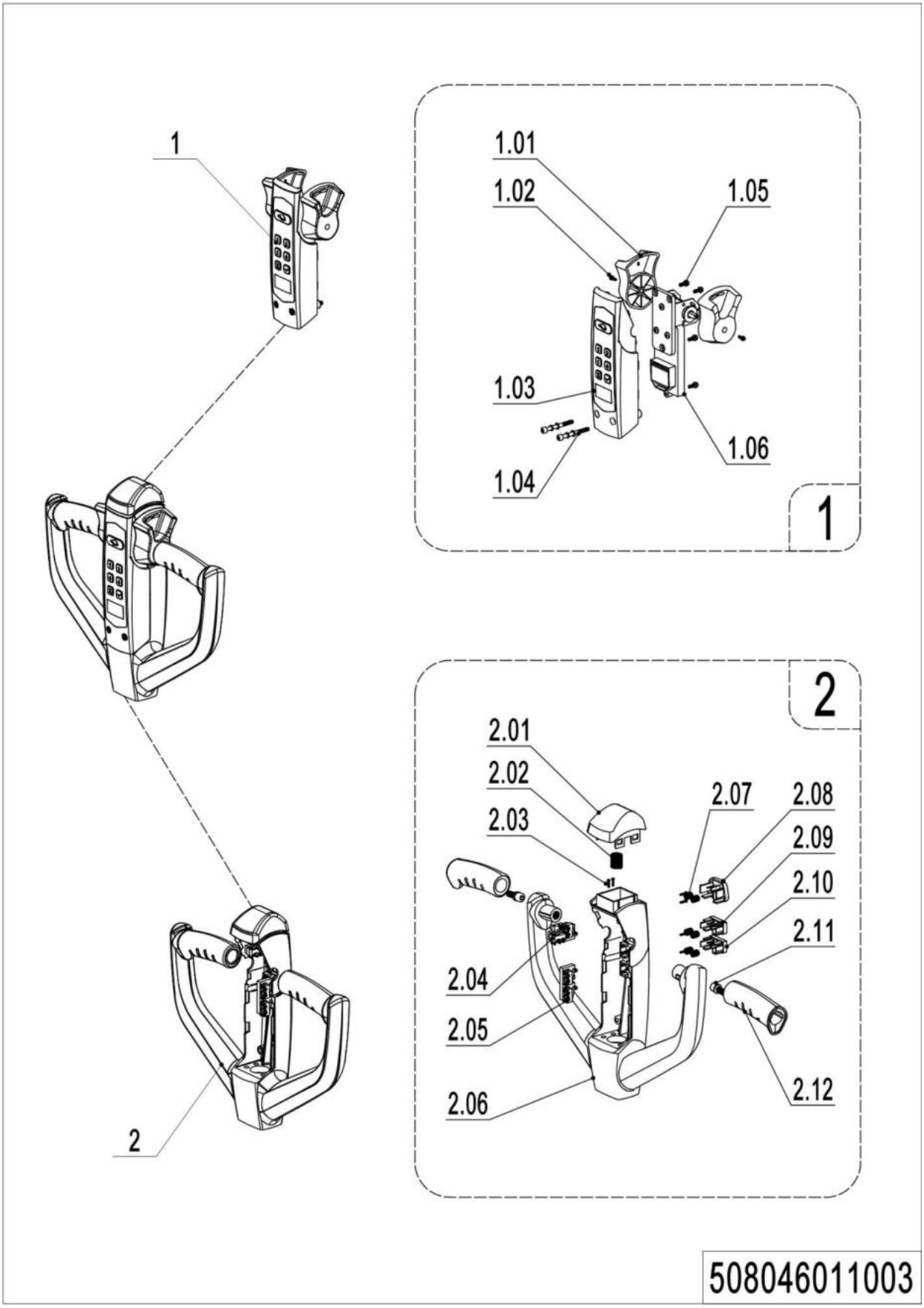

1= Supply as package. 2= Supply with constraints. 3= Phasing-out supply. 4= Supply as assembly. 5= Check other tables.

03 Control Handle(EN1175-2020)（508046011003）

No.	Item Code	Mark	Item Description	Qty.	Substitute	Note
--	922100100109		Control Handler	1		EN1175-2020
1	508098510124		Handle Cap Kit	1		Be sure to color your order
1.01	508098520103		Traction lever	1		
1.02	508098520104		Screw Kits	2		
1.03	508098510132		Display Screen kit	1		Be sure to color your order
1.04	508098520108		Screw Kits	2		
1.05	508098520109		Screw M4x10	4		
1.06	508098520110		PCBA assembly	1		
2	508098510125		Handle Cap Kit	1		Be sure to color your order
2.01	508098520112		Cap,Break Switch	1		
2.02	508098520113		Spring	1		
2.03	508098520114		Screw ST2.2x12	6		
2.04	508098520115		Belly and horn harness	1		
2.05	508098520116		Lifting and lowering harness	1		
2.06	508098520117		Upper Cap	1		Be sure to color your order
2.07	508098520118		Spring	6		
2.08	508098520119		Horn	1		Be sure to color your order
2.09	508098520120		Lifting button	1		Be sure to color your order
2.10	508098520121		Lowering button	1		Be sure to color your order
2.11	508098520122		Screw Kits	2		
2.12	508098520123		Handle	2		Be sure to color your order

04 Control Handle(SJ) (508046011004)

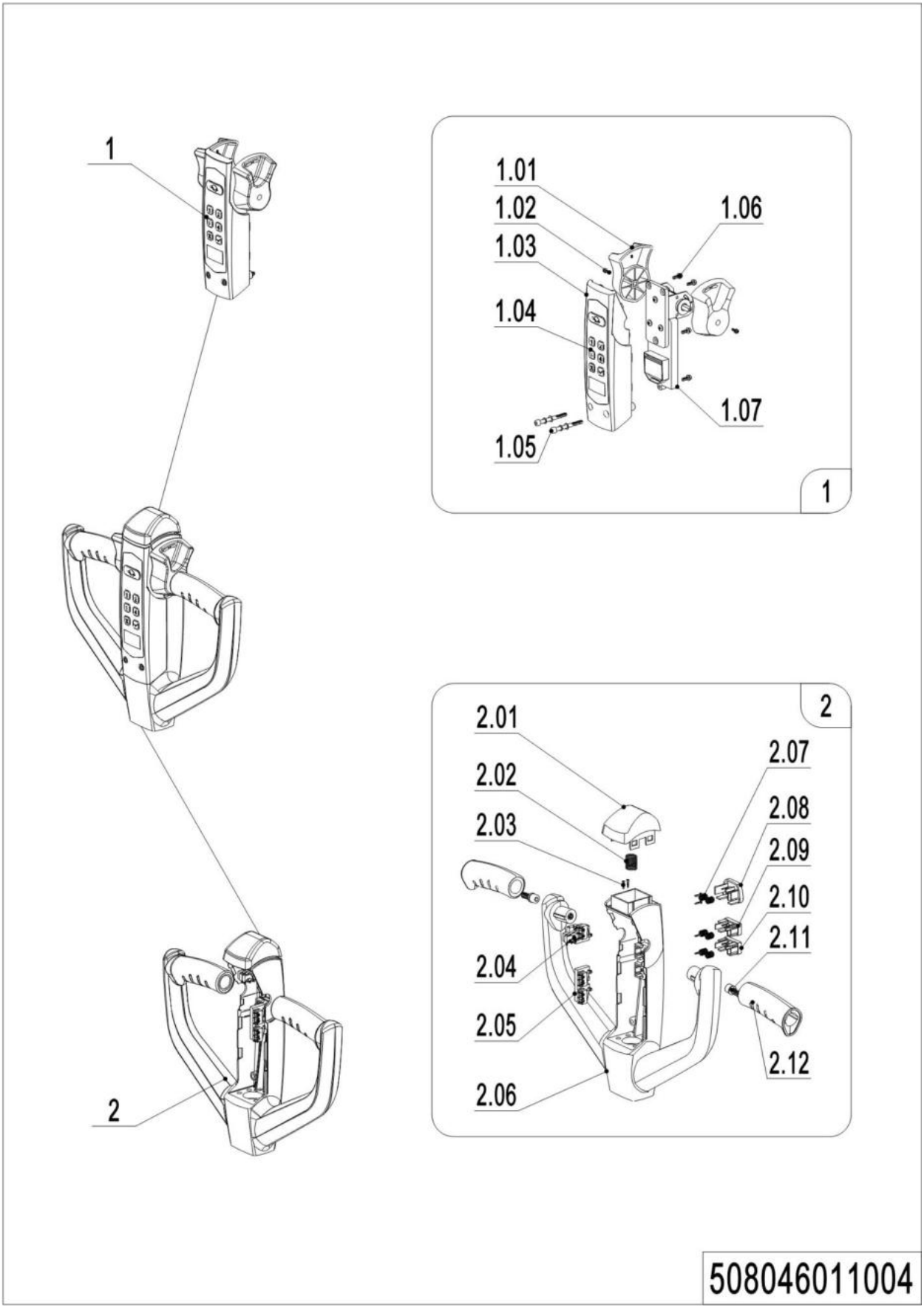

1= Supply as package. 2= Supply with constraints. 3= Phasing-out supply. 4= Supply as assembly. 5= Check other tables.

04 Control Handle(SJ) (508046011004)

No.	Item Code	Mark	Item Description	Qty.	Substitute	Note
--	922100100168		Control Handler	1		SJ
1	508098510149		Handle Cap Kit	1		Be sure to color your order
1.01	508098520103		Traction lever	1		
1.02	508098520129		Screw Kits	2		
1.03	508098520105		Handle Cap	1		Be sure to color your order
1.04	508098520131		Membrane switch	1		
1.05	508098520108		Screw Kits	2		
1.06	508098520109		Screw M4x10	4		
1.07	508098520130		PCBA assembly	1		
2	508098510150		Handle Cap Kit	1		Be sure to color your order
2.01	508098520112		Cap,Break Switch	1		
2.02	508098520113		Spring	1		
2.03	508098520114		Screw ST2.2x12	6		
2.04	508098520133		Belly and horn harness	1		
2.05	508098520116		Lifting and lowering harness	1		
2.06	508098520117		Upper Cap	1		Be sure to color your order
2.07	508098520118		Spring	6		
2.08	508098520119		Horn	1		Be sure to color your order
2.09	508098520120		Lifting button	1		Be sure to color your order
2.10	508098520121		Lowering button	1		Be sure to color your order
2.11	508098520122		Screw Kits	2		
2.12	508098520123		Handle	2		Be sure to color your order

05 Load Wheel（508046017001）

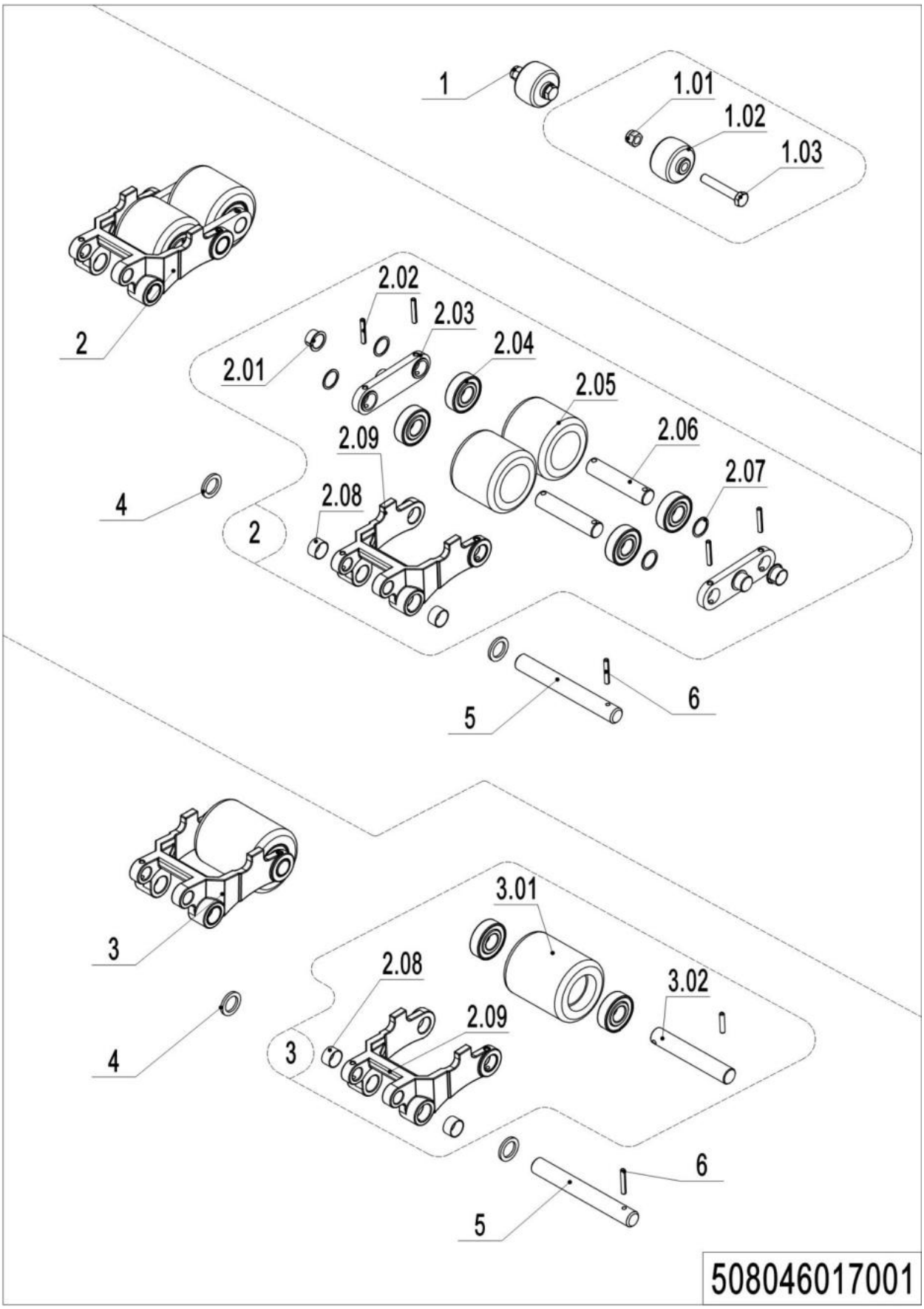

1= Supply as package. 2= Supply with constraints. 3= Phasing-out supply. 4= Supply as assembly. 5= Check other tables.

05 Load Wheel (508046017001)

No.	Item Code	Mark	Item Description	Qty.	Substitute	Note
1	502398510003		Pulley components	2		
1.01	910300500005	1	Nut	2		
1.02	505638520039		Running Pulley	2		
1.02	506238520041		Running Pulley	2		Selection of 61mm height
1.03	941100200019	1	Bolt	2		
2	508098510049		Wheel	2		
2.01	940500200038		Bushing	4		
2.01	940500200005		Bushing	4		Selection of 61mm height
2.02	910600400027	1	Spring Pin	8		
2.03	502317020000		Plate	4		
2.03	302517020003		Plate	4		Selection of 61mm height
2.04	910700200019		Bearing	8/4		Double / single
2.04	910700200018		Bearing	4		Selection of 61mm height
2.05	940300300005		WheelΦ80x70	4		
2.05	940300300031		WheelΦ60x70	4		Selection of 61mm height
2.06	502317020001		Axle	4		
2.06	302517020002		Axle	4		Selection of 61mm height
2.07	940600500013		Washer	8/4		Double / single
2.07	302517020005		Washer	8		Selection of 61mm height
2.08	940500100088		Bushing	4		
2.09	508038520130		Riser	2		QT
2.09	508038520131		Riser	2		ZG
2.09	508038520085		Riser	2		Selection of 61mm height
3	508098510050		Wheel	2		
3.01	940300300023		WheelΦ80x93	2		
3.02	301017020001		Axle	2		
4	325017020000		Washer	4		
5	508038520030		Axle	2		
5	508038520105		Axle	2		Selection of 61mm height
6	910600400025		Spring Pin	2		

06 Caster（508046016501）

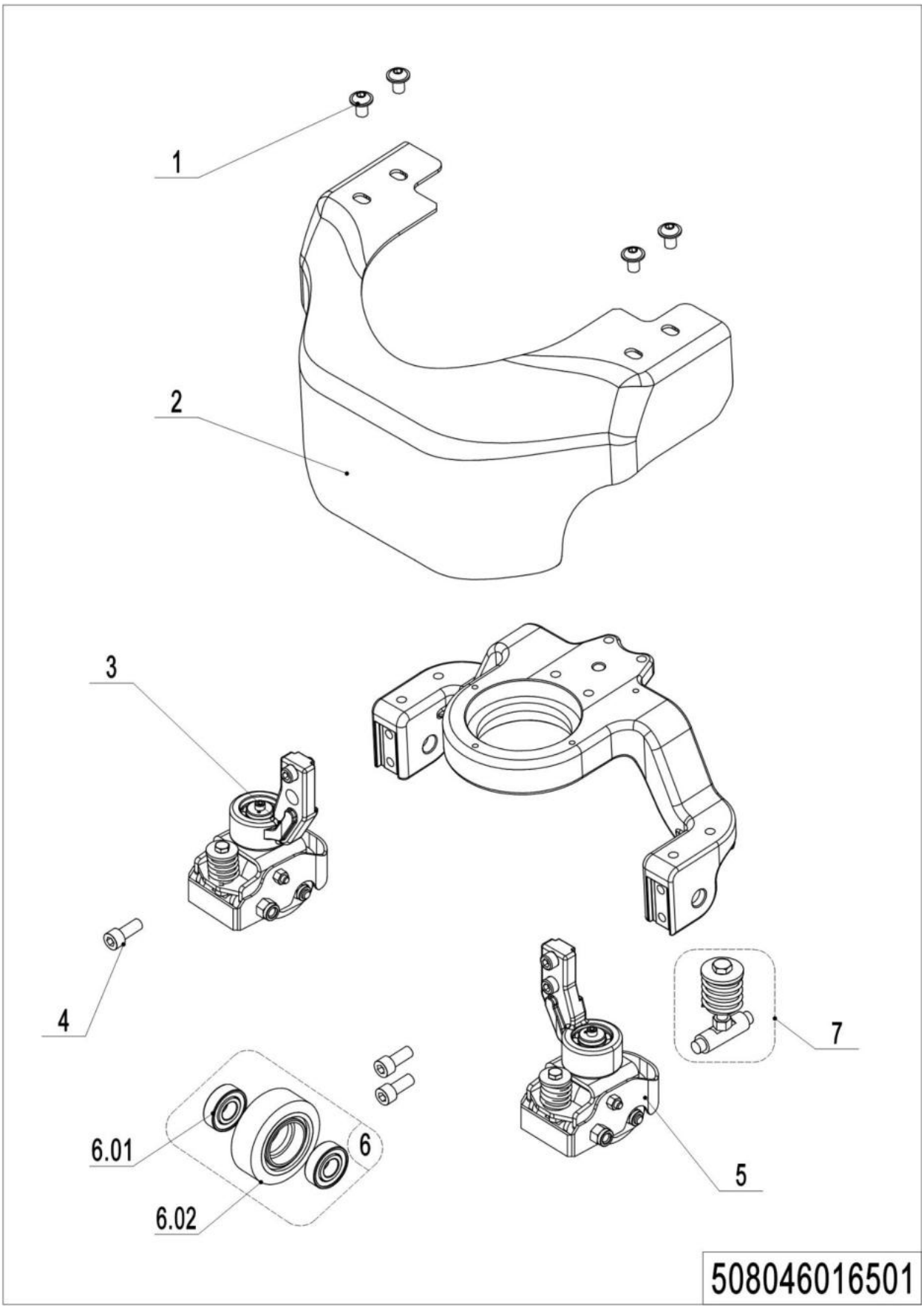

1= Supply as package. 2= Supply with constraints. 3= Phasing-out supply. 4= Supply as assembly. 5= Check other tables.

06 Caster(508046016501)

No.	Item Code	Mark	Item Description	Qty.	Substitute	Note
1	941100100005	1	Screw	4		
2	508016520000		Apron	1		35 mm off the ground
2	508016520008		Apron	1		45 mm off the ground
2	508016510006		Apron	1		35 mm off the ground
2	508016510011		Apron	1		45 mm off the ground
3	508016510002		Caster Assembly	1		
4	910200200182	1	Screw	4		
5	508016510005		Caster Assembly	1		
6	502398510015	2	Load Wheel Kit	2		
6.1	910700200018		Bearing	4		
6.2	940300300017		WheelΦ80x30	2		
7	508098510047		Spring Components	2		

07 Caster(without)（508046016502）

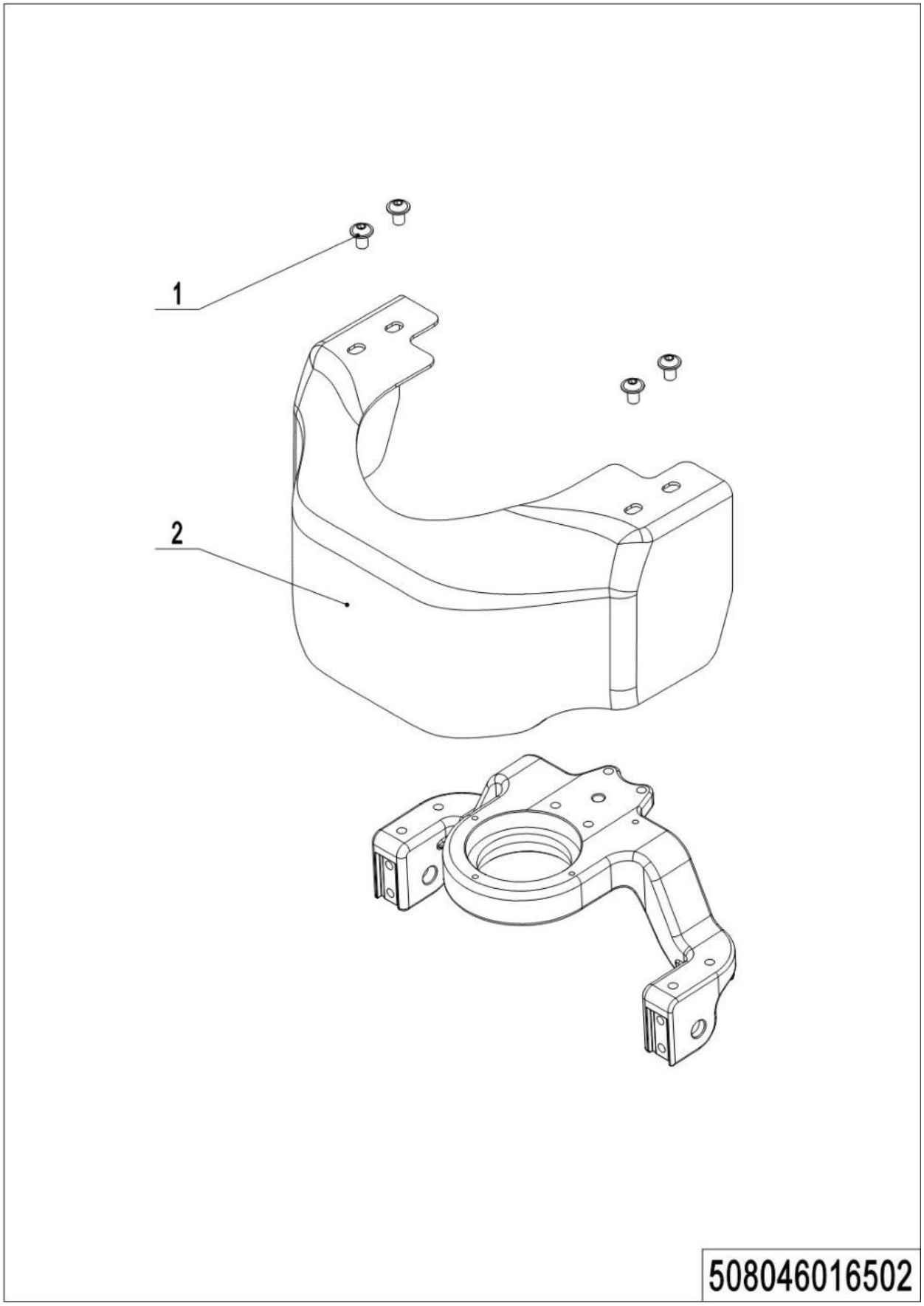

1= Supply as package. 2= Supply with constraints. 3= Phasing-out supply. 4= Supply as assembly. 5= Check other tables.

07 Caster(without）(508046016502)

No.	Item Code	Mark	Item Description	Qty.	Substitute	Note
1	941100100005	1	Screw	4		
2	508016520001		Apron	1		35 mm off the ground
2	508016520009		Apron	1		45 mm off the ground
2	508016510007		Apron	1		35 mm off the ground
2	508016510010		Apron	1		45 mm off the ground

Chapter 5: Electrical Parts

01 Wire Harness (508046033001)

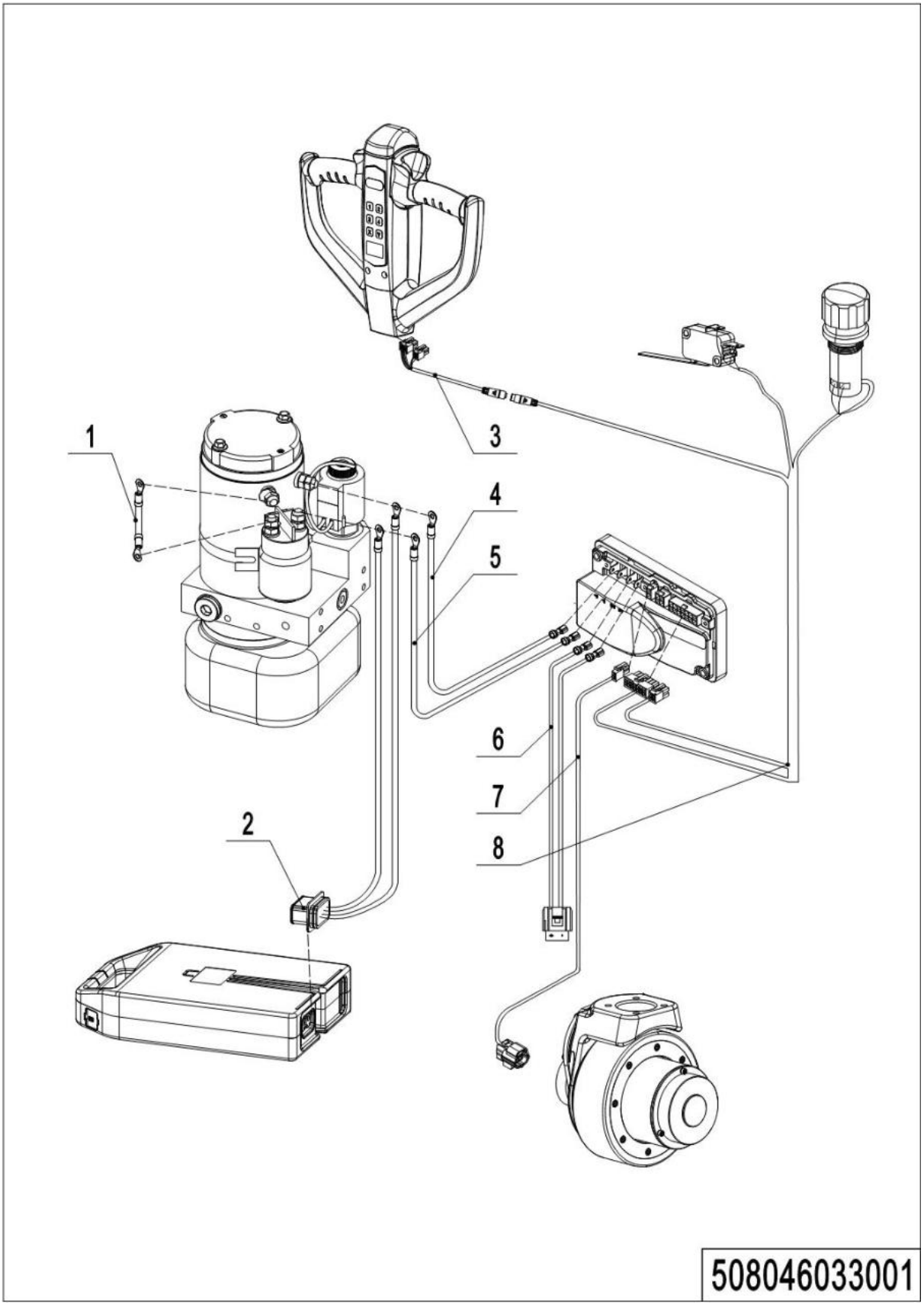

1= Supply as package. 2= Supply with constraints. 3= Phasing-out supply. 4= Supply as assembly. 5= Check other tables.

01 Wire Harness(508046033001)

No.	Item Code	Mark	Item Description	Qty.	Substitute	Note
1	508033010010		Wire Harness	1		
2	508033010003		Wire Harness	1		
3	508033010001		Wire Harness	1		
4	508033010005		Wire Harness	1		
5	508033010004		Wire Harness	1		
6	508033010006		Wire Harness	1		
6	508033010018		Wire Harness	1		Waterproof
7	508033010007		Wire Harness	1		
8	508033010000		Wire Harness	1		
8	508033010009		Wire Harness	1		JS

02 Wire Harness(EN1175-2020)(508046033003)

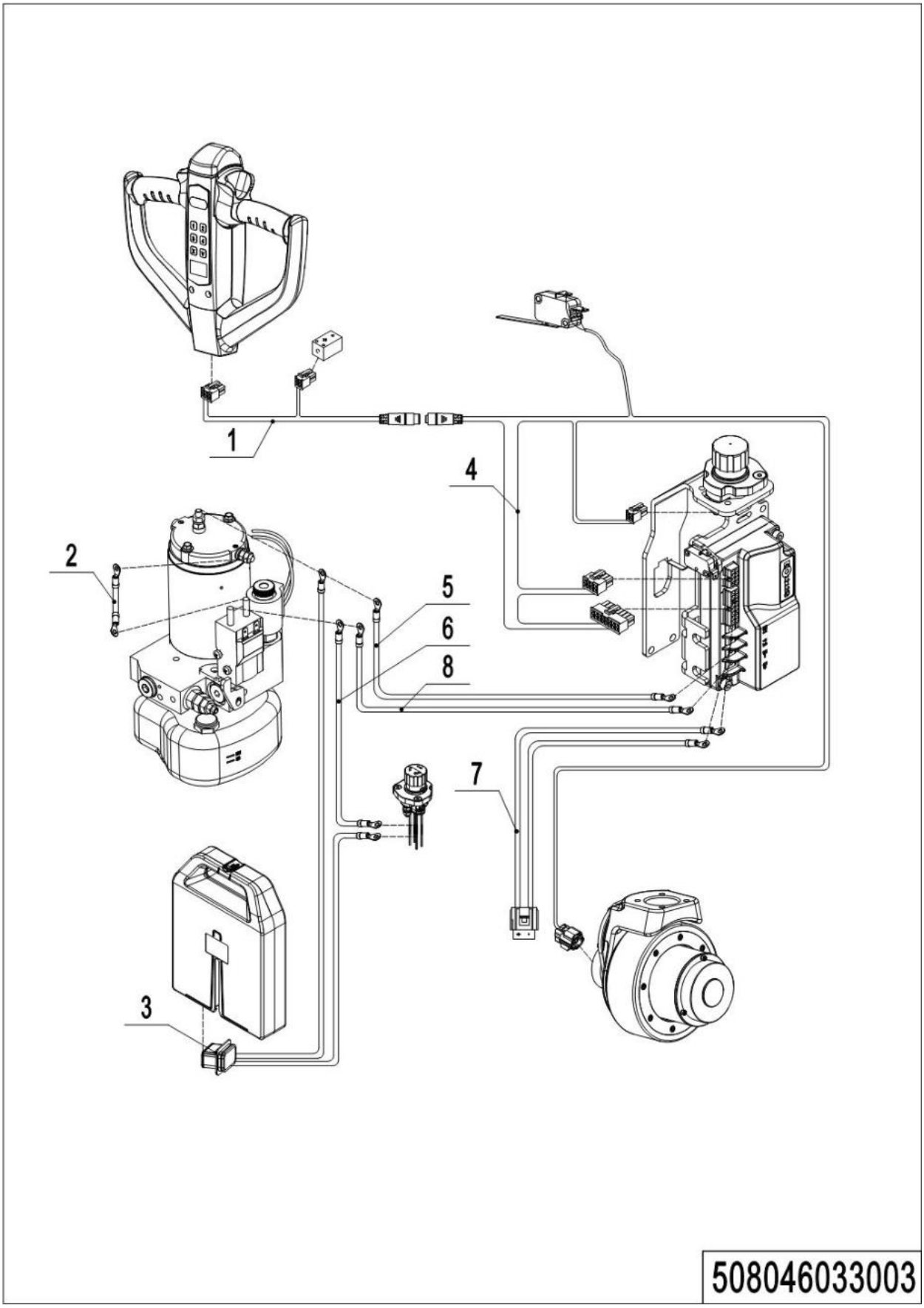

1= Supply as package. 2= Supply with constraints. 3= Phasing-out supply. 4= Supply as assembly. 5= Check other tables.

02 Wire Harness (EN1175-2020)(508046033003)

No.	Item Code	Mark	Item Description	Qty.	Substitute	Note
1	508033010040		Wire Harness	1		
2	508033010034		Wire Harness	1		
3	508033010037		Wire Harness	1		
4	508033010031		Wire Harness	1		JS
4	508033010039		Wire Harness	1		
5	508033010036		Wire Harness	1		
6	508033010033		Wire Harness	1		
7	508033010032		Wire Harness	1		Waterproof
7	508033010044		Wire Harness	1		
8	508033010035		Wire Harness	1		

03 Controller (508046033002)

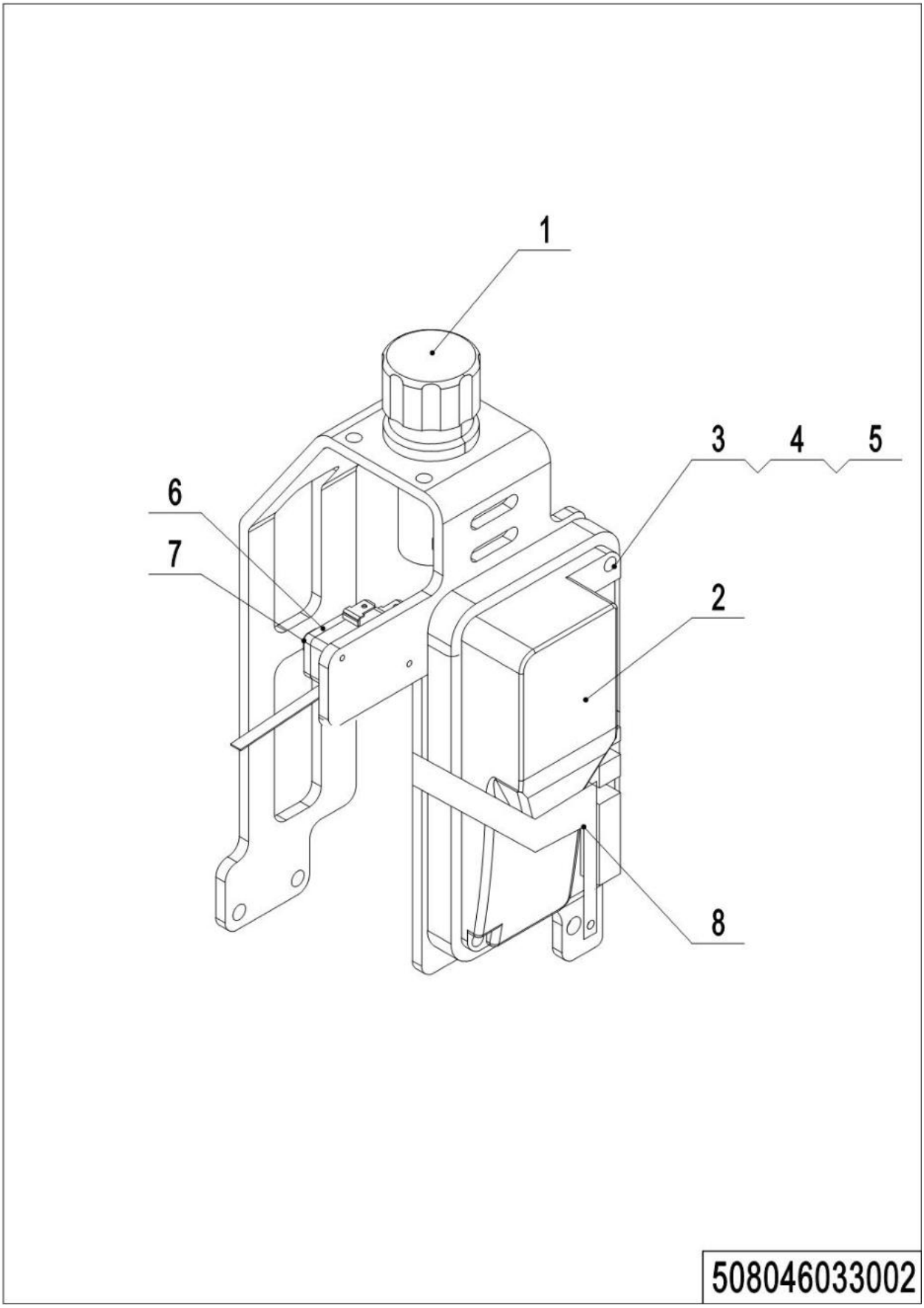

1= Supply as package. 2= Supply with constraints. 3= Phasing-out supply. 4= Supply as assembly. 5= Check other tables.

03 Controller(508046033002)

No.	Item Code	Mark	Item Description	Qty.	Substitute	Note
1	920200100015		Emergency Button	1		
2	921400100081		Controller	1		
3	910400100004	1	Flat Washer	2		
4	910400500004	1	Spring Washer	2		
5	910200200025	1	Screw	2		
6	505698520008	1	Screw	2		
7	920200300012		Microswitch	1		
8	508033020000		Bracket	1		

1= Supply as package. 2= Supply with constraints. 3= Phasing-out supply. 4= Supply as assembly. 5= Check other tables.

04 Controller(EN1175-2020)(508046033004)

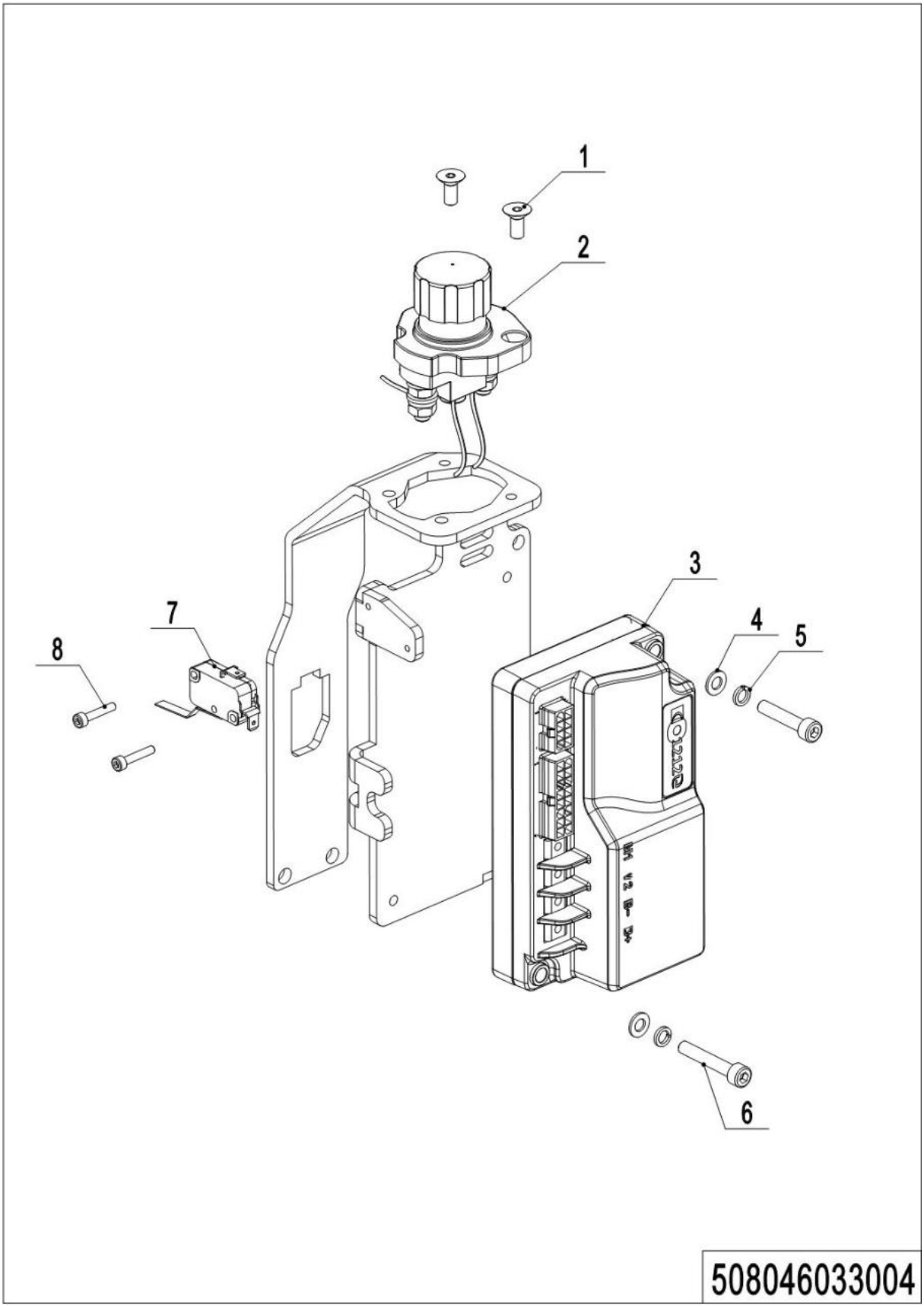

1= Supply as package. 2= Supply with constraints. 3= Phasing-out supply. 4= Supply as assembly. 5= Check other tables.

04 Controller (EN1175-2020) (508046033004)

No.	Item Code	Mark	Item Description	Qty.	Substitute	Note
1	910200400010		Screw	2		
2	920200100027		Emergency Button	1		
3	921400100174		Controller	1		1212E-2503
4	910400100003	1	Flat Washer	2		
5	910400500003	1	Spring Washer	2		
6	910200200018	1	Screw	1		
7	920200300022		Microswitch	1		
8	910200200004		Screw	1		

05 Charger (508046036501)

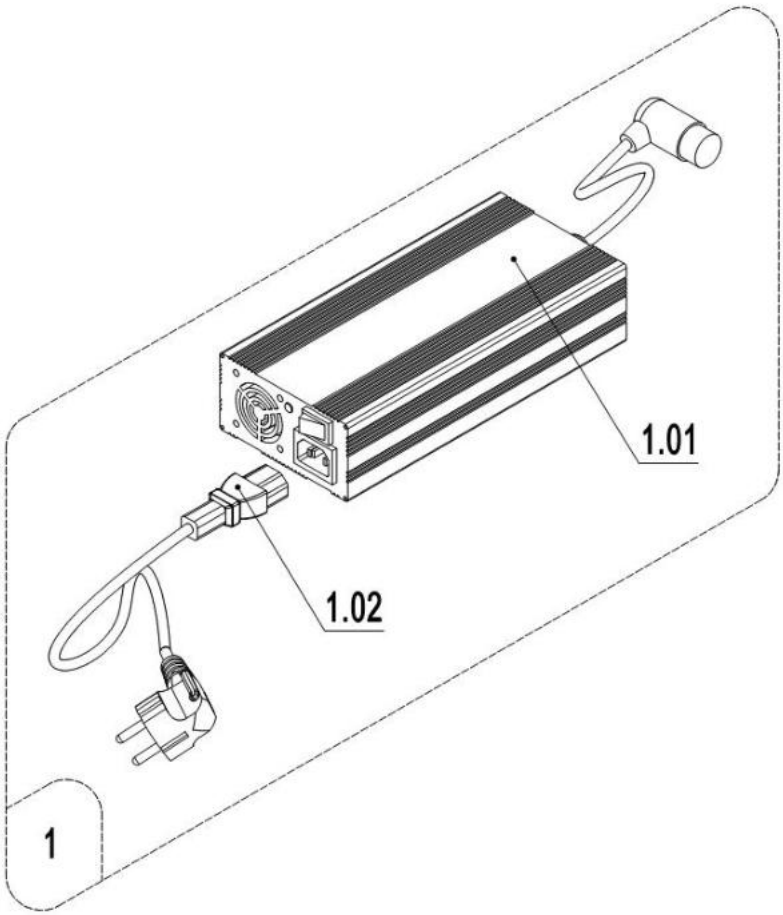

508046036501

1= Supply as package. 2= Supply with constraints. 3= Phasing-out supply. 4= Supply as assembly. 5= Check other tables.

05 Charger (508046036501)

No.	Item Code	Mark	Item Description	Qty.	Substitute	Note
1	508036510013		Charger24V12A(Asia)	1		QQE
1	508036510014		Charger24V12A(ENG)	1		QQE
1	508036510015		Charger24V12A(US)	1		QQE
1	508036510016		Charger24V12A(EU)	1		QQE
1	508036510017		Charger24V12A(AUS)	1		QQE
1	508036510018		Charger24V12A(ITA)	1		QQE
1	508036510019		Charger24V12A(SWE)	1		QQE
1	508036510020		Charger24V12A(ISR)	1		QQE
1	508036510021		Charger24V12A(BRA)	1		QQE
1	508036510022		Charger24V12A(ARG)	1		QQE
1	508036510038		Charger24V12A(ZA)	1		QQE
1	508036510037		Charger24V12A(IND)	1		QQE
1	508036510041		Charger24V12A(Asia)	1		WT
1	508036510042		Charger24V12A(ENG)	1		WT
1	508036510043		Charger24V12A(US)	1		WT
1	508036510044		Charger24V12A(EU)	1		WT
1	508036510045		Charger24V12A(AUS)	1		WT
1	508036510046		Charger24V12A(ITA)	1		WT
1	508036510047		Charger24V12A((SWE))	1		WT
1	508036510048		Charger24V12A(ISR)	1		WT
1	508036510049		Charger24V12A(BRA)	1		WT
1	508036510050		Charger24V12A(ARG)	1		WT
1	508036510051		Charger24V12A(ZA)	1		WT
1	508036510052		Charger24V12A(IND)	1		WT
1	921000200353		Charger 24V8A (Aisa-CHN)	1		SS
1	921000200464		Charger 24V8A (Aisa-ENG)	1		SS
1	508036510002		Charger24V8A(ENG)	1		SS
1	508036510003		Charger24V8A((US, JAP)	1		SS
1	508036510004		Charger24V8A(EU)	1		SS
1	508036510005		Charger24V8A(AUS)	1		SS

05 Charger (508046036501) Continuation1

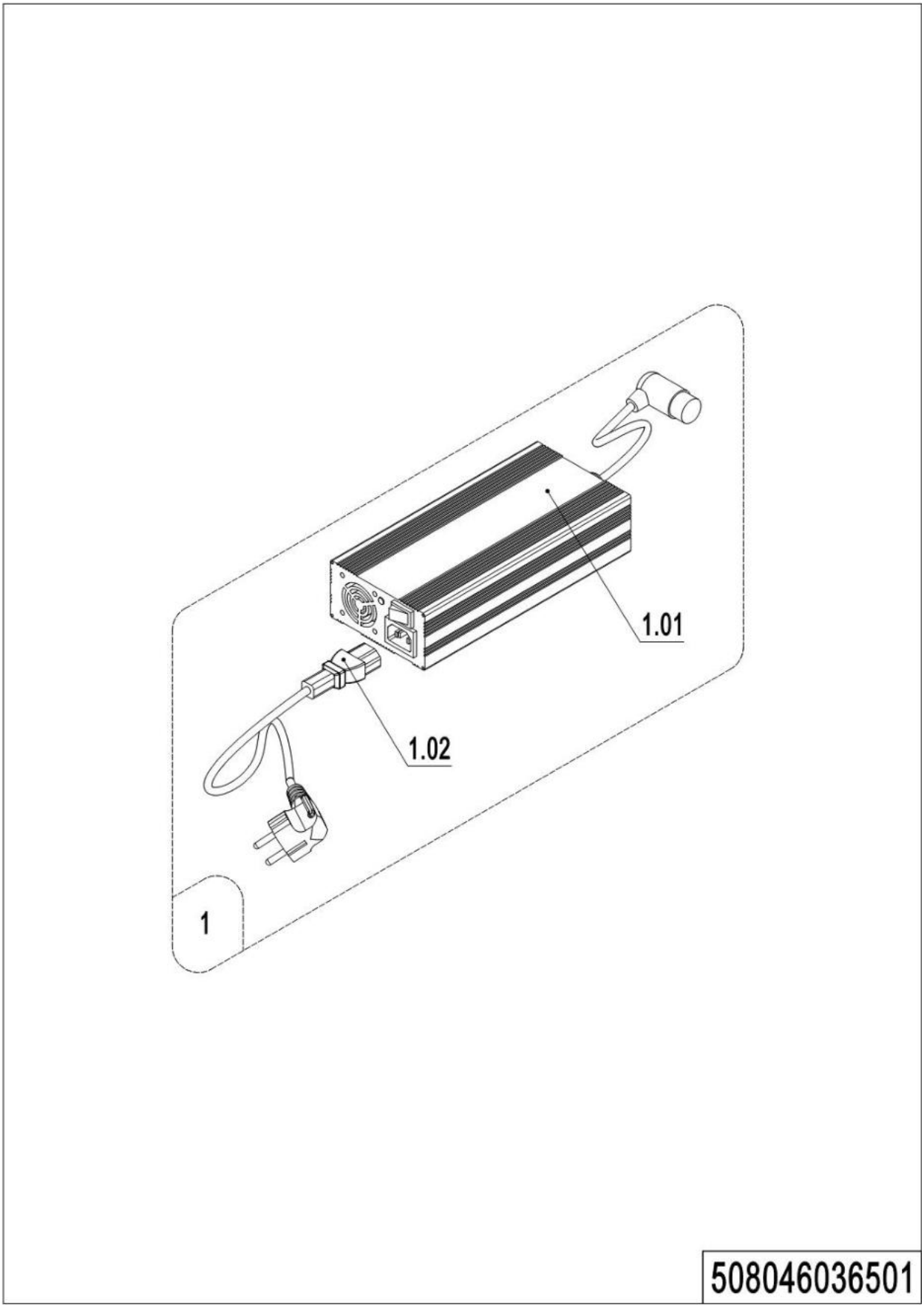

1= Supply as package. 2= Supply with constraints. 3= Phasing-out supply. 4= Supply as assembly. 5= Check other tables.

05 Charger (508046036501)Continuation1

No.	Item Code	Mark	Item Description	Qty.	Substitute	Note
1	508036510006		Charger24V8A(ITA)	1		SS
1	508036510007		Charger24V8A(SWE)	1		SS
1	508036510008		Charger24V8A(ISR)	1		SS
1	508036510009		Charger24V8A(BRA)	1		SS
1	508036510010		Charger24V8A(ARG)	1		SS
1	508036510032		Charger24V8A(EU)	1		JN
1	508036510033		Charger24V8A(IND)	1		SS
1	508036510035		Charger24V8A(EU,US)	1		SS
1	508036510036		Charger24V8A(ZA)	1		SS
1	508036510040		Charger24V8A(US)	1		QQE
1	921000200351		Charger 24V5A (Aisa-CHN)	1		SS
1	921000200463		Charger 24V5A (Aisa-ENG)	1		SS
1.01	508036510025		Charger24V5A(EU)	1		SS
1.01	921000200363		Charger 24V12A	1		QQE
1.01	921000200353		Charger 24V8A (Aisa-CHN)	1		SS
1.01	921000200464		Charger 24V8A (Aisa-ENG)	1		SS
1.01	921000200355		Charger 24V8A	1		SS(CE)
1.01	921000200354		Charger 24V8A	1		SS
1.01	921000200427		Charger 24V8A (EU)	1		ZJ
1.01	921000200466		Charger 24V8A	1		QQE
1.01	921000200351		Charger 24V5A (Aisa-CHN)	1		SS
1.01	921000200463		Charger 24V5A (Aisa-ENG)	1		SS
1.01	921000200418		Charger 24V5A (EU)	1		SS
1.02	921500200050		Power Cord(ARG)	1		
1.02	921500200024		Power Cord(AUS)	1		
1.02	921500200049		Power Cord(BRA)	1		
1.02	921500200023		Power Cord(USA)	1		
1.02	921500200022		Power Cord(EU)	1		
1.02	921500200026		Power Cord(SWE)	1		
1.02	921500200028		Power Cord(ISR)	1		

05 Charger (508046036501) Continuation2

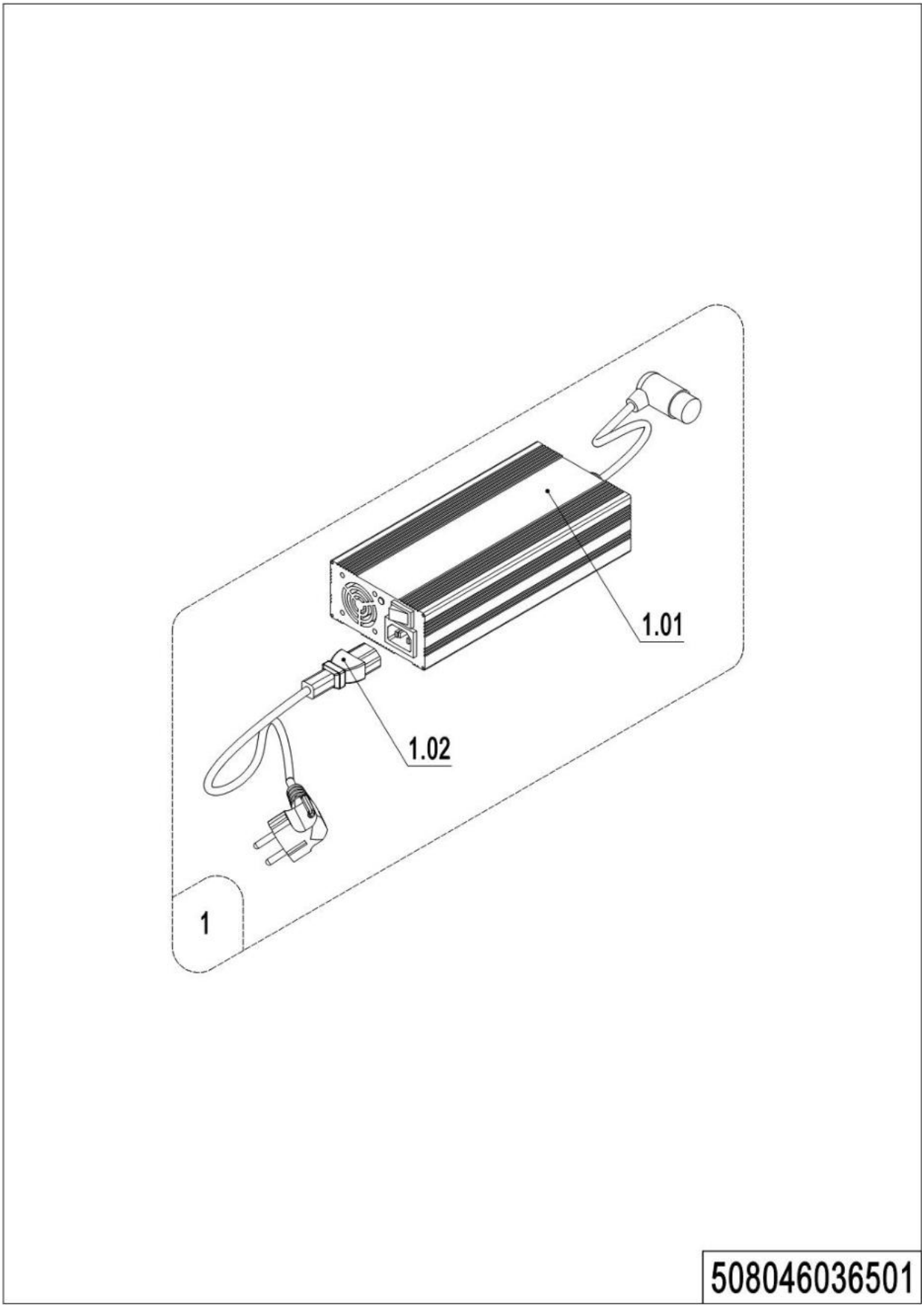

1= Supply as package. 2= Supply with constraints. 3= Phasing-out supply. 4= Supply as assembly. 5= Check other tables.

05 Charger (508046036501) Continuation2

No.	Item Code	Mark	Item Description	Qty.	Substitute	Note
1.02	921500200025		Power Cord(ITA)	1		
1.02	921500200047		Power Cord(IND)	1		
1.02	921500200027		Power Cord(ENG)	1		
1.02	921500200038		Power Cord(ZA)	1		

06 Traction Battery 24V20Ah (508046037001)

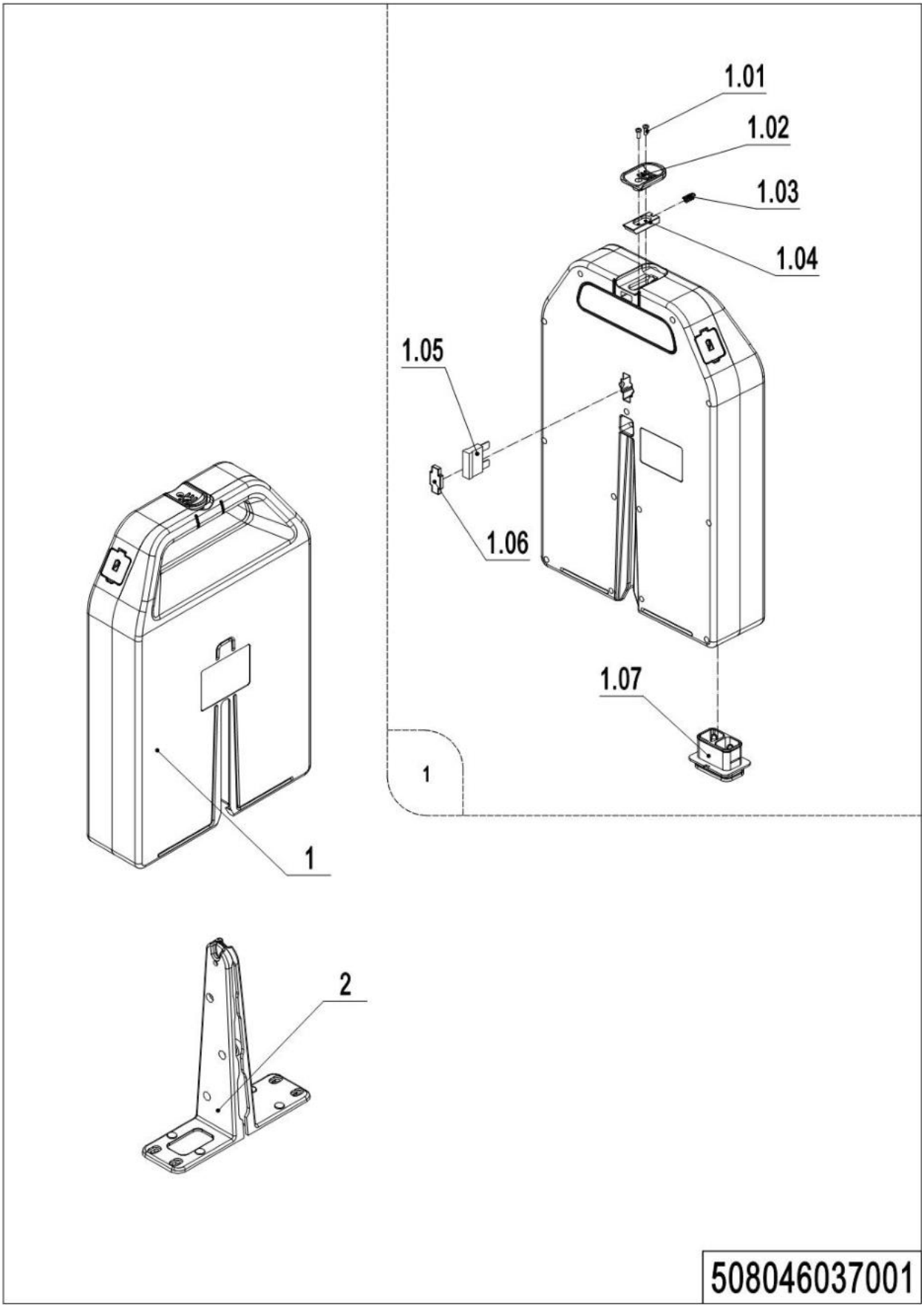

1= Supply as package. 2= Supply with constraints. 3= Phasing-out supply. 4= Supply as assembly. 5= Check other tables.

06 Traction Battery 24V20Ah (508046037001)

No.	Item Code	Mark	Item Description	Qty.	Substitute	Note
1	508037010014		Li Battery24V20Ah	1		HF
1	508037010016		Li Battery24V20Ah	1		FDE
1	508037010021		Li Battery24V20Ah	1		HF, with heating
1	508037010036		Li Battery24V20Ah	1		XNL
1	508037010032		Li Battery 24V20Ah	1		FDE,EN1175-2020
1	508037010031		Li Battery 24V20Ah	1		HF. EN1175-2020
1.01	910200500011	2	Screw	2		
1.02	508098520022	2	Plastic Handle	1		
1.03	508098520024	2	Spring	1		
1.04	508098520023	2	Fixing Mount	1		
1.05	920100200006		Fuse	1		
1.06	508098520021	2	waterproof plug	1		
1.07	508098510069	2	Rubber Cover	1		
2	508033010020		Battery Rack	1		

07 Traction Battery 24V36Ah (508046037002)

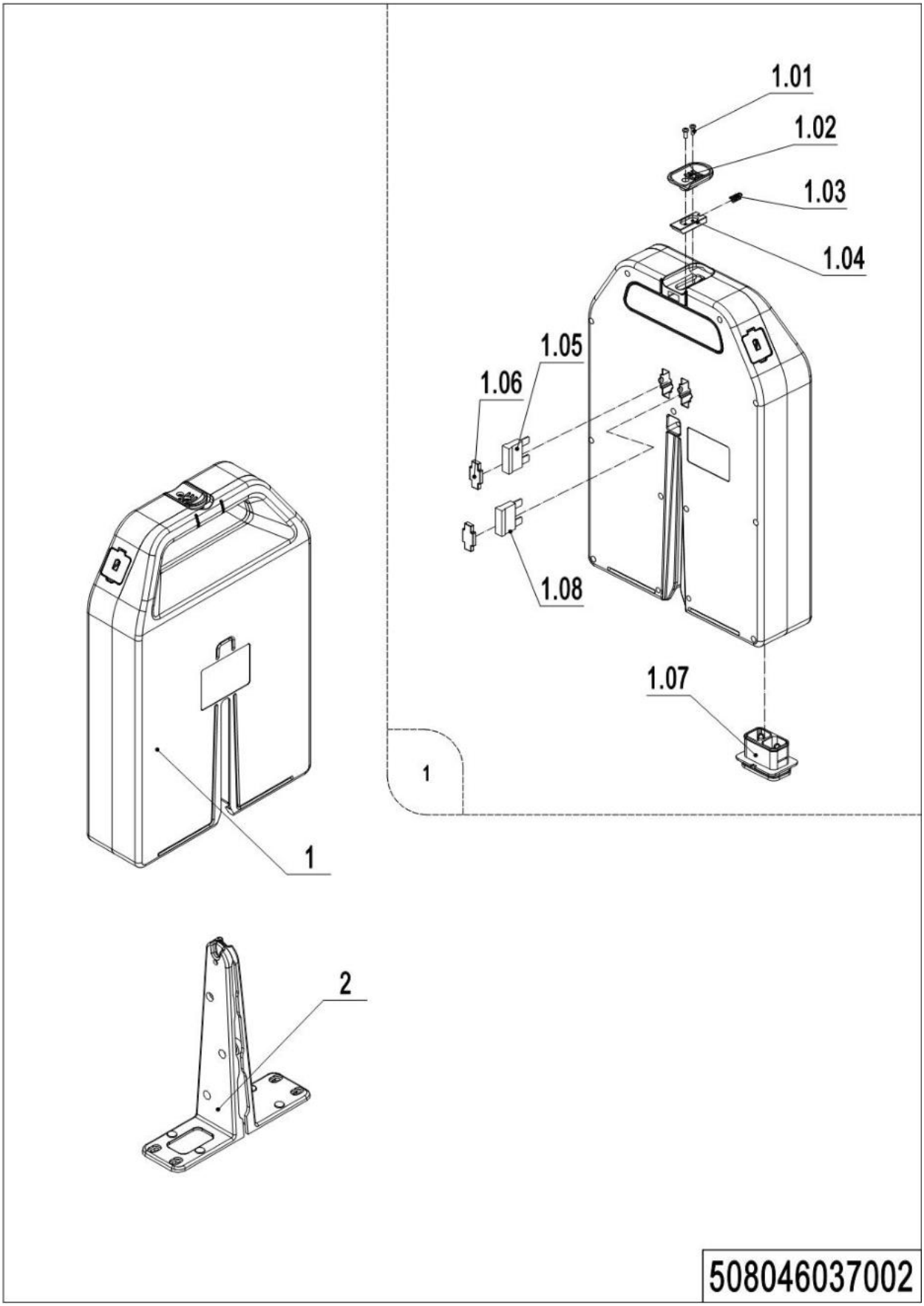

1= Supply as package. 2= Supply with constraints. 3= Phasing-out supply. 4= Supply as assembly. 5= Check other tables.

07 Traction Battery 24V36Ah (508046037002)

No.	Item Code	Mark	Item Description	Qty.	Substitute	Note
1	508037010015		Li Battery 24V36Ah	1		HF
1	508037010017		Li Battery 24V36Ah	1		FDE
1	508037010022		Li Battery 24V36Ah	1		HF, with heating
1	508037010037		Li Battery 24V36Ah	1		XNL
1	508037010033		Li Battery 24V36Ah	1		FDE,EN1175-2020
1	508037010029		Li Battery 24V36Ah	1		HF,EN1175-2020
1.01	910200500011	2	Screw	2		
1.02	508098520022	2	Plastic Handle	1		
1.03	508098520024	2	Spring	1		
1.04	508098520023	2	Fixing Mount	1		
1.05	920100200006		Fuse	1		
1.06	508098520021	2	waterproof plug	2		
1.07	508098510069	2	Rubber Cover	1		
1.08	508098520050		Fuse	1		
2	508033010020		Battery Rack	1		

Chapter 6: Special Parts

01 Load Backrest（508046040501）

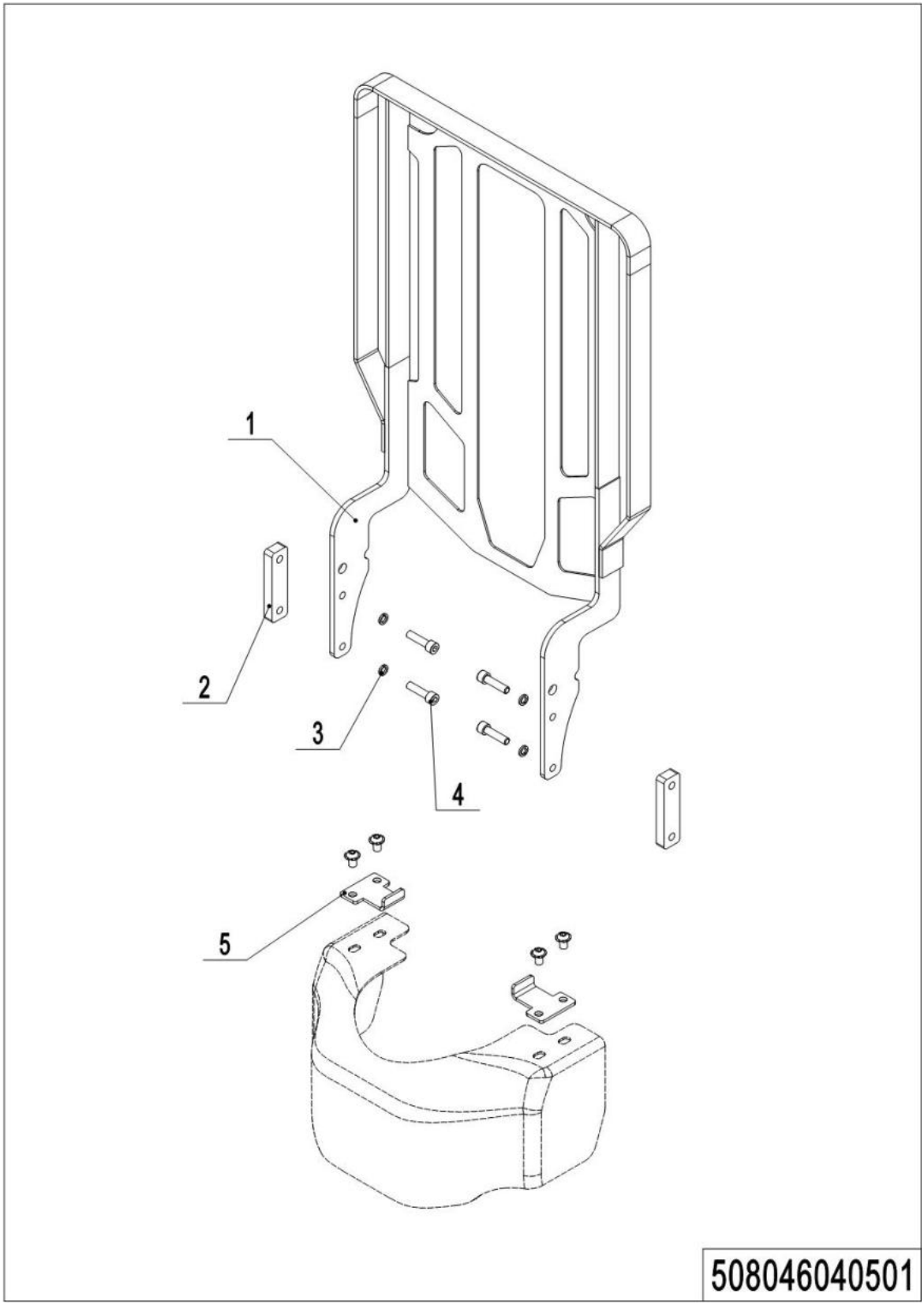

1= Supply as package. 2= Supply with constraints. 3= Phasing-out supply. 4= Supply as assembly. 5= Check other tables.

01 Load Backrest（508046040501）

No.	Item Code	Mark	Item Description	Qty.	Substitute	Note
1	508040510003		Load Backrest	1		
1	508040510004		Load Backrest	1		
1	508040510005		Load Backrest	1		
2	508040520000	1	Subplate	2		
3	910400500007	1	Spring Washer	4		
4	910200200079	1	Screw	4		
5	508040520017	1	Stop Plate	2		

Chapter 7: Others

01 Labels and Decals-EU(508046047001)

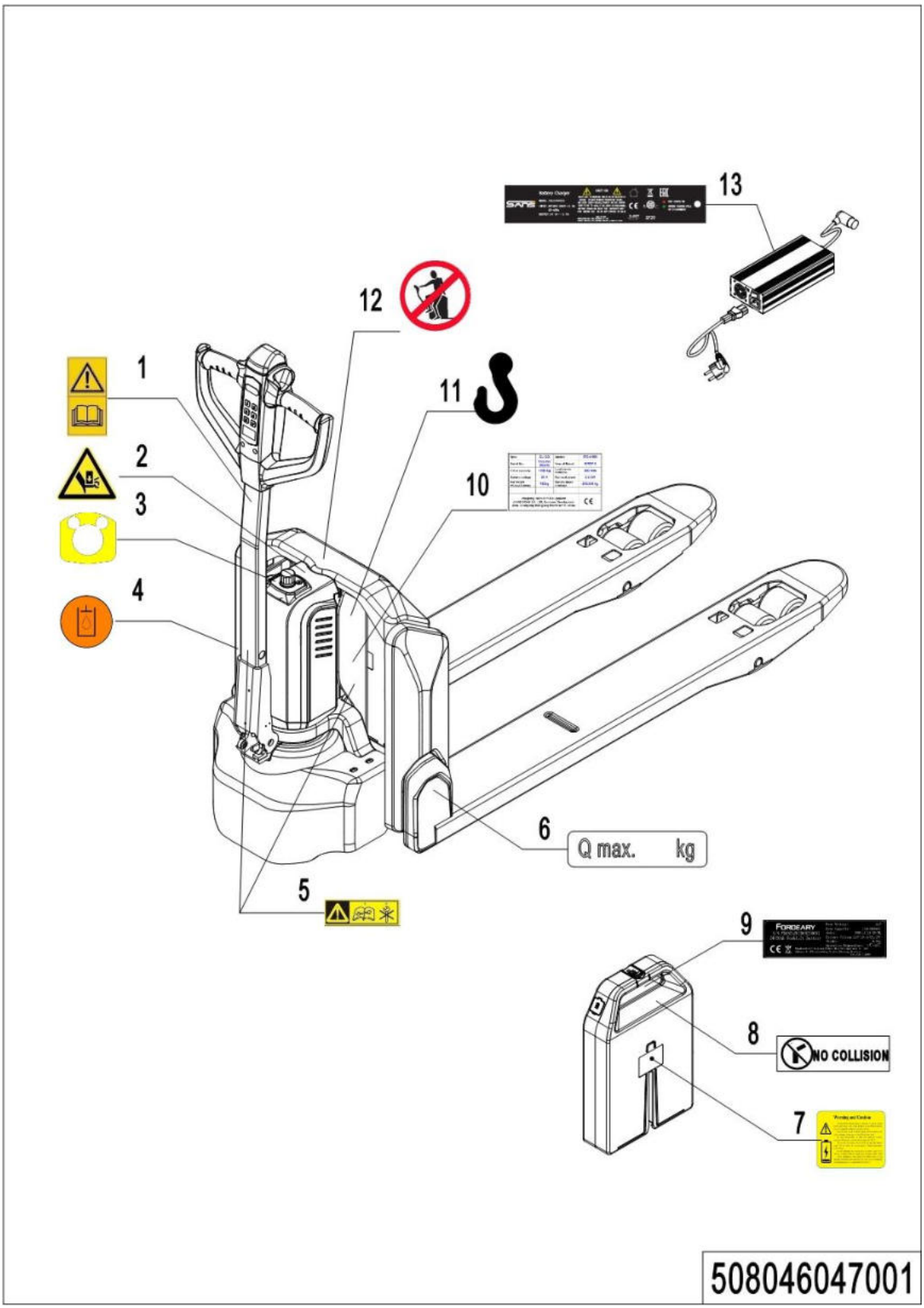

1= Supply as package. 2= Supply with constraints. 3= Phasing-out supply. 4= Supply as assembly. 5= Check other tables.

01 Labels and Decals-EU (508046047001)

No.	Item Code	Mark	Item Description	Qty.	Substitute	Note
1	941200300002		Label	1		
2	508047020007		Label	1		
3	508047020000		Label	1		
4	941200300003		Label	1		
5	508047020004		Label	2		
6	941200200009		Label	2		
7	508098520025		Label	1		
8	508047020002		Label	1		
9	508047020009		Label	1		
10	508047520002		Truck data plate	1		
11	941200300001		Label	2		
12	941200100003		Label	1		
13	508047520005		Label	1		

02 Labels and Decals-US (508046047002)

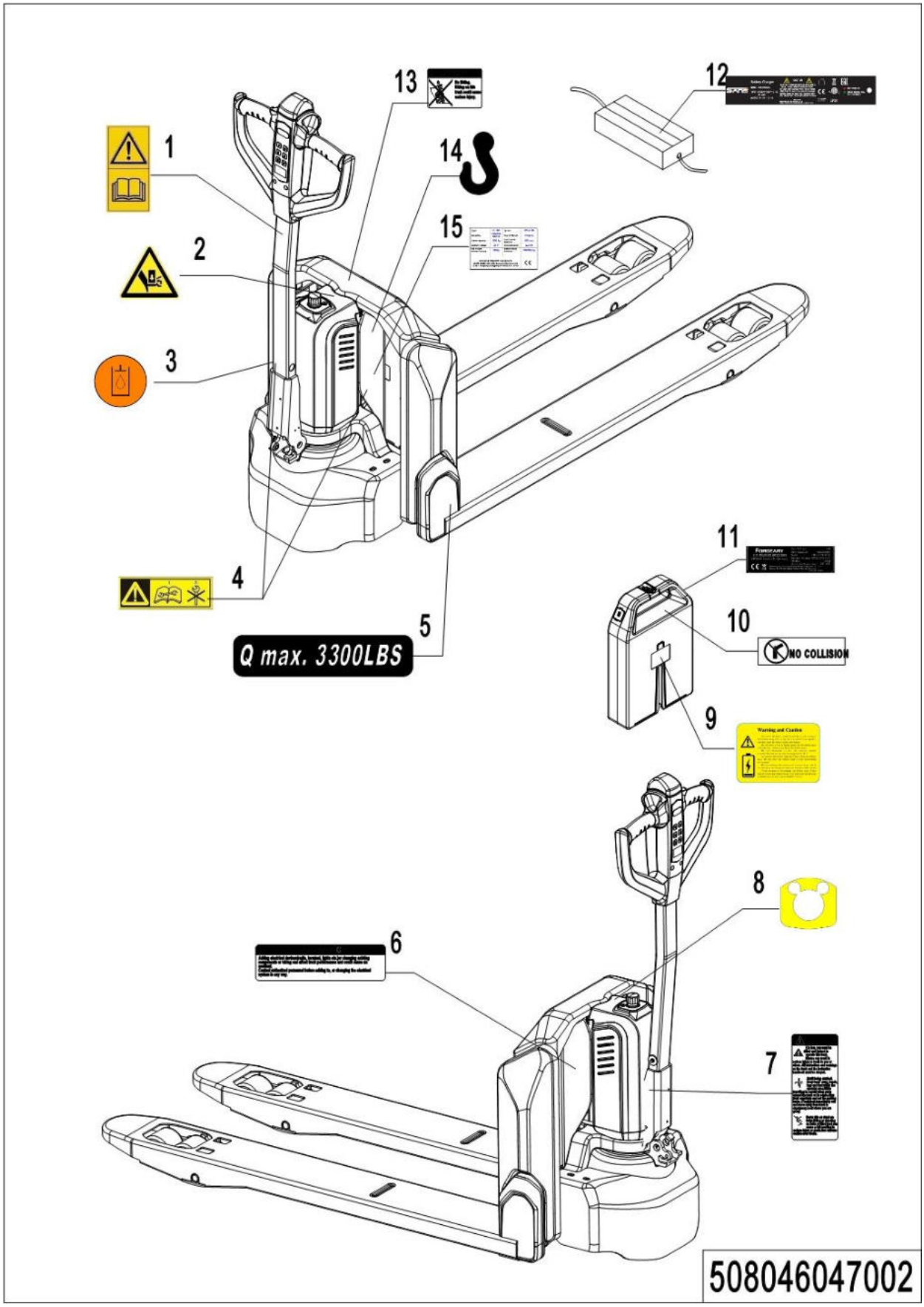

1= Supply as package. 2= Supply with constraints. 3= Phasing-out supply. 4= Supply as assembly. 5= Check other tables.

02 Labels and Decals-US(508046047002)

No.	Item Code	Mark	Item Description	Qty.	Substitute	Note
1	941200300002		Label	1		
2	508047020007		Label	1		
3	941200300003		Label	1		
4	508047020004		Label	2		
5	941200200035		Label	2		
6	941200100010		Label	1		
7	941200100009		Label	1		
8	508047020000		Label	1		
9	508098520025		Label	1		
10	508047020002		Label	1		
11	508047020009		Label	1		
12	508047520005		Label	1		
13	941200100011		Label	1		
14	941200300001		Label	2		
15	508047520002		Truck data plate	1		

Appendix

01 Electrical Circuit Diagram(508046045501)

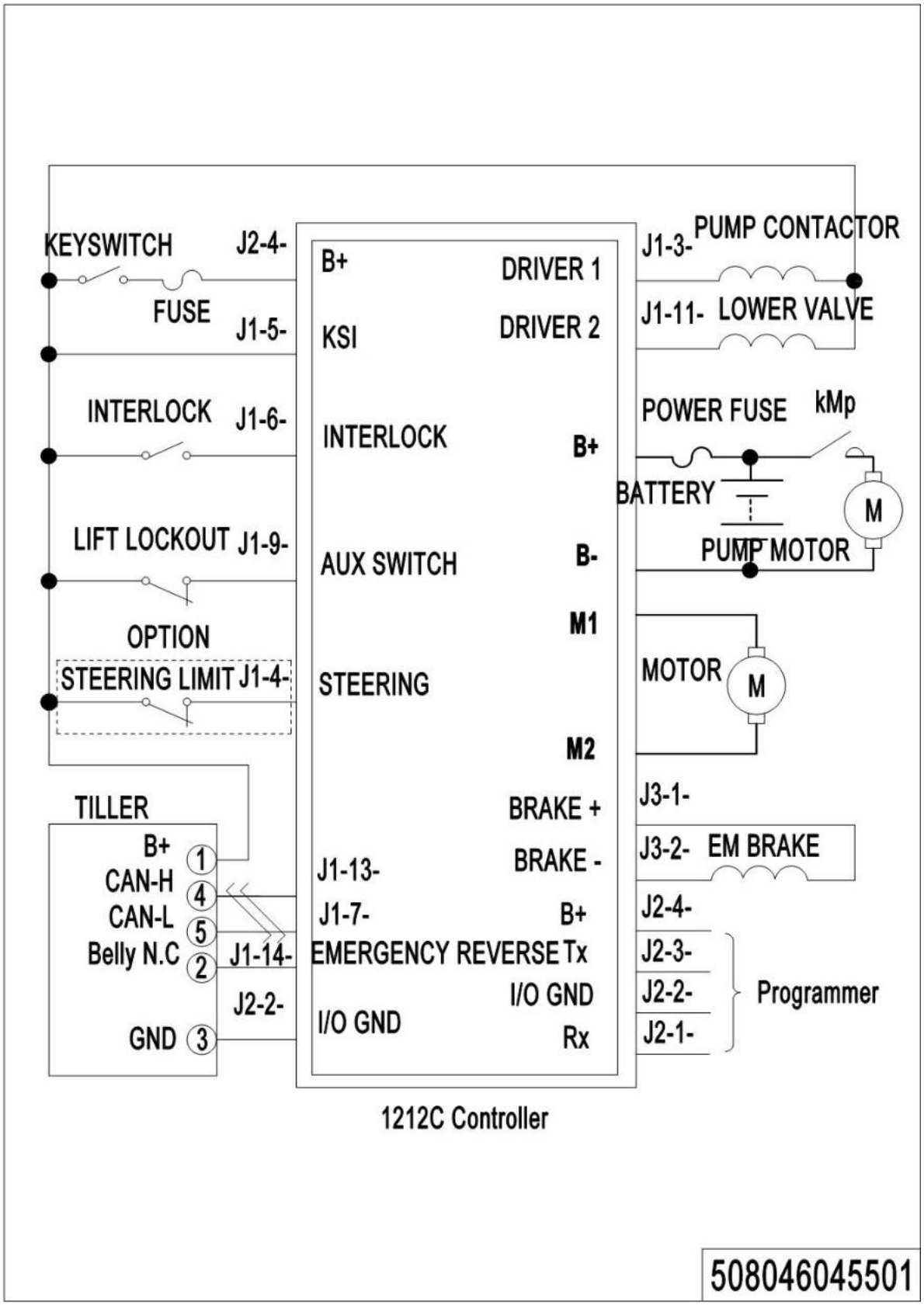

02 Electrical Circuit Diagram (EN1175-2020)(508046045504)

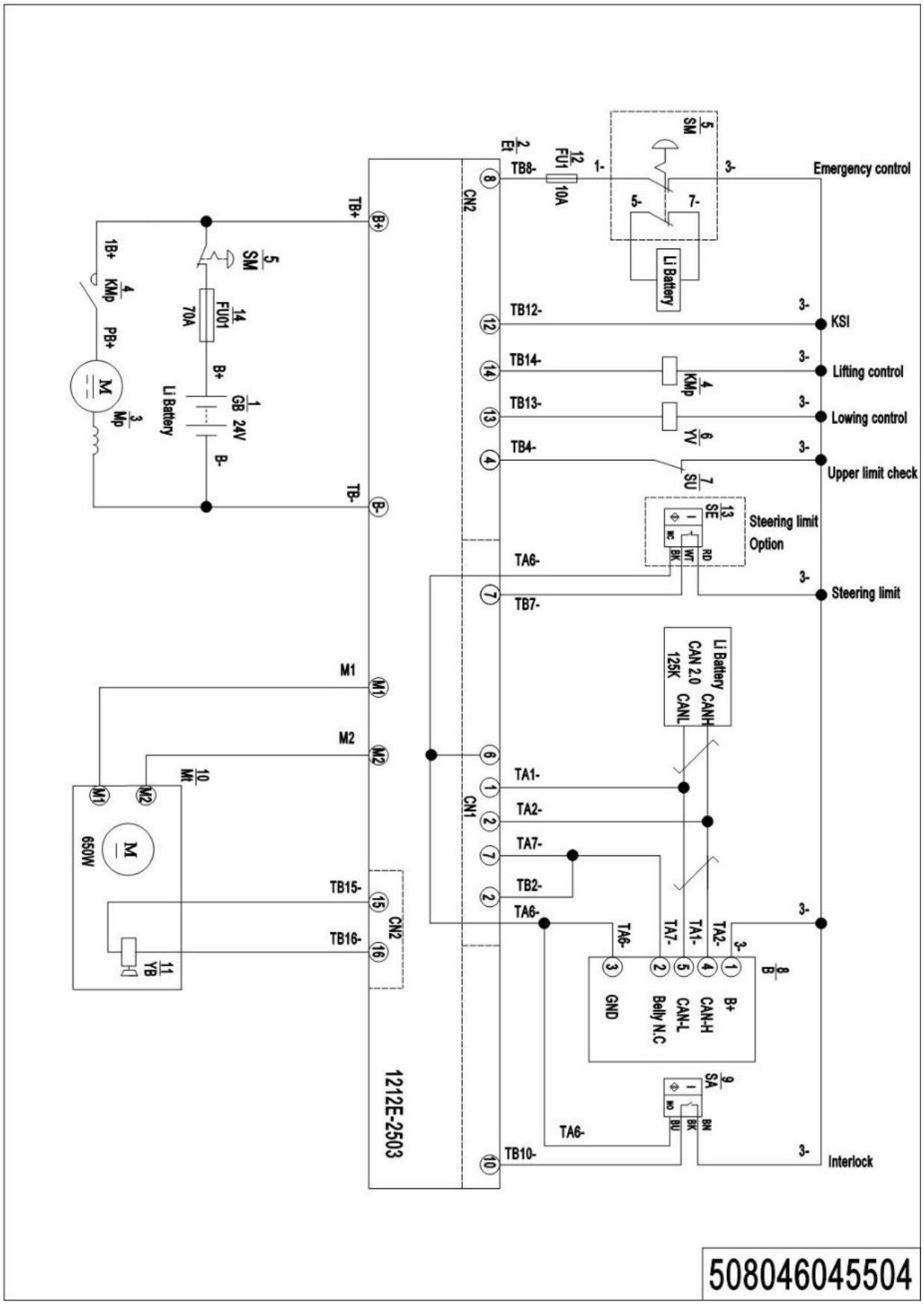

03 Hydraulic Circuit Diagram(508046045502)

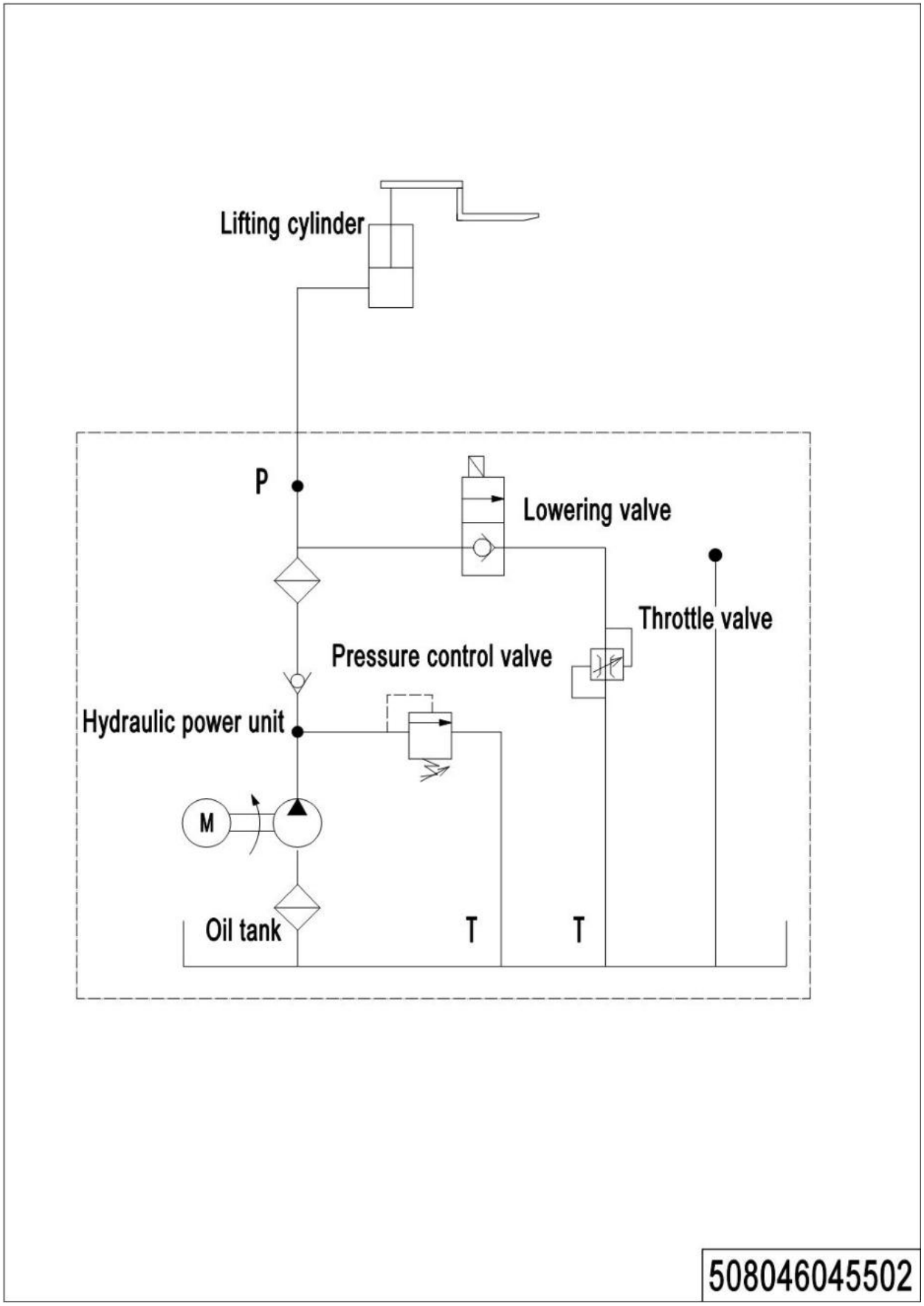

04 Consumable Parts List

No.	Item Code	Item Description	Qty.	Chapter/ Section/ Number
1	910700200058	Bearing	1	Chapter 1/01/5
2	910700600044	Bearing	1	Chapter 1/01/7
3	910700200004	Bearing	1	Chapter 1/02/4
4	508098520000	Carbon Brush	4	Chapter 1/02/6.01
5	910700200016	Bearing	1	Chapter 1/02/6.03
6	508098520003	Wheel	1	Chapter 1/02/8
7	508098520026	Wheel	1	Chapter 1/02/8
8	910700200053	Bearing	1	Chapter 1/03/7
9	961000700008	Wheel	1	Chapter 1/03/8
10	961001300010	Bearing	1	Chapter 1/04/3
11	910700200044	Wheel	2	Chapter 1/04/4
12	508098520008	Brush	1	Chapter 2/01/4.02 Chapter 2/02/4.02
13	508098510018	Seal Kit	1	Chapter 2/01/10.01 Chapter 2/02/10.01
14	508598510004	Seal Kit	1	Chapter 2/01/10.03 Chapter 2/02/10.03
15	940500100097	Bushing	2	Chapter 3/01/16.01 Chapter 3/02/17.01
16	911200100002	Oil Cup	2	Chapter 3/01/16.02 Chapter 3/02/17.02
17	940500100083	Bushing	8	Chapter 3/01/16.05 Chapter 3/02/17.05
18	911200100001	Oil Cup	2	Chapter 3/01/19.06 Chapter 3/02/20.06
19	508033010001	Wire Harness	1	Chapter 4/01/4
20	940500200001	Bushing	2	Chapter 4/01/6
21	920200400027	Proximity Switch	1	Chapter 4/01/9
22	508011010001	Gas Spring	1	Chapter 4/01/10.3
23	505638520039	Running Pulley	2	Chapter 4/05/1.02
24	508098510049	Wheel	2	Chapter 4/05/2
25	940500200038	Bushing	4	Chapter 4/05/2.01
26	940500200005	Bushing	4	Chapter 4/05/2.01
27	910700200019	Bearing	8/4	Chapter 4/05/2.04
28	910700200018	Bearing	4	Chapter 4/05/2.04
29	940300300005	WheelΦ80x70	4	Chapter 4/05/2.05
30	940300300031	WheelΦ60x70	4	Chapter 4/05/2.05
31	940500100088	Bushing	4	Chapter 4/05/2.09

1= Supply as package. 2= Supply with constraints. 3= Phasing-out supply. 4= Supply as assembly. 5= Check other tables.

No.	Item Code	Item Description	Qty.	Chapter/ Section/ Number
32	508098510050	Wheel	2	Chapter 4/05/3
33	940300300023	WheelΦ80x93	2	Chapter 4/05/3.01
34	910700200018	Bearing	2	Chapter 4/06/6.1
35	940300300017	WheelΦ80x30	1	Chapter 4/06/6.2
36	508098510047	Spring Components	2	Chapter 4/06/7
37	920200100015	Emergency Button	1	Chapter 5/03/1
38	920200300012	Microswitch	1	Chapter 5/03/7
39	920200100027	Emergency Button	1	Chapter 5/04/2
40	920200300022	Microswitch	1	Chapter 5/04/8
41	920100200006	Fuse	1	Chapter 5/06/1.05 Chapter 5/07/1.05
42	508098520050	Fuse	1	Chapter 5/07/1.08

1= Supply as package. 2= Supply with constraints. 3= Phasing-out supply. 4= Supply as assembly. 5= Check other tables.