Print Number:　　Print Date:

NOBLELIFT

Scan QR Code for More

Service Hotline: 836115

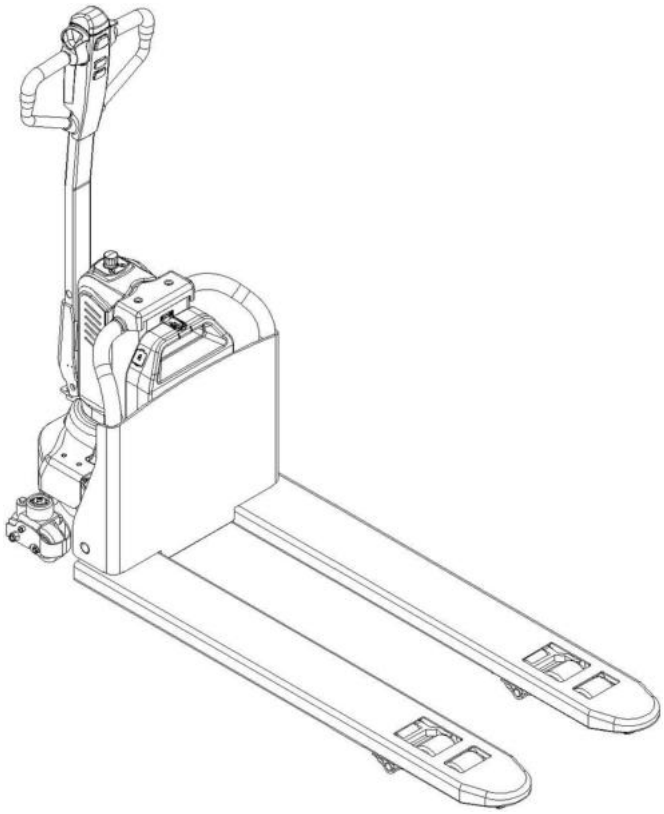

Electric Pallet Truck PTE12N

PARTS MANUAL

507946020101

Version: V07

Truck Identification Number From:

Parts Manual PTE12N-PM07EN

Please order spare parts from authorized dealers of Noblelift Intelligent Equipment Co., LTD.

In order to avoid wrong delivery, all the orders for spare parts should specify the following items:

- Truck model, identification number and manufacture year.
- Orders for spare parts of mast, hydraulic transmission unit, steering axle, motor, etc. shall indicate the manufacture number of these parts.
- Codes for Noblelift spare parts are shown in the table of parts manual. Please also pay attention to the description of supply status, order quantity, etc. (check the number listed in "Mark" column of the parts manual).

"Mark" Column:

The unmarked indicates the parts are in short supply cycle.

Number 1: supply as package. Indicating these that parts are small parts and seal parts, which are supplied in package unit and in short supply cycle.

Number 2: supply with constraints. Indicating that these spare parts are not in stock and will be prepared for production after receiving the order from customers, which are in long supply cycle.

Number 3: phasing-out supply. Indicating that these parts will be replaced by new parts due to technical improvements and the current stock will not be available when these parts run out. Please check the description of technical improvements notice.

Number 4: supply as assembly. Indicating that these parts are assembly parts defined by manufacture process, which cannot be supplied as a single part.

Number 5: check other tables.

This parts manual is the property of Noblelift and can be shared under the confidential agreement only, Noblelift has the right to claim for compensation of any unauthorized use. Copy without permission is not allowed. Figures in the manual are not limited by the original design. Noblelift Intelligent Equipment Co., LTD reserves the right to improve the products for continuous technology progress.

Table of Contents

Chapter 1: Drive System....1
01 Drive Unit Steering（507946013501）....1
01 Drive Unit Steering（507946013501）Continuation....3
02 Drive Assembly(ZD)(507946013001)....5
03 Drive Assembly (YX210)(507946013002)....7
Chapter 2: Hydraulic System....9
01 Hydraulic Components(507946023501)....9
02 Hydraulic Components (EN1175-2020)（507946023502）....11
Chapter 3: Truck Frame....13
01 Truck Frame (507946038501)....13
02 Truck Frame (507946038502)....15
Chapter 4: Steering System, Braking System, Wheels....17
01 Tiller Unit(507946011001)....17
02 Control Handle (507946011002)....19
03 Control Handle(EN1175-2020)（507946011003）....21
04 Load Wheel（507946017001）....23
05 Caster（507946016501）....25
06 Caster(without)（507946016502）....27
Chapter 5: Electrical Parts....29
01 Wire Harness (507946033001)....29
02 Wire Harness (EN1175-2020) (507946033003)....31
03 Controller (507946033002)....33
04 Controller(EN1175-2020)(507946033004)....35
05 Charger (507946036501)....37
05 Charger (507946036501) Continuation1....39
05 Charger (507946036501) Continuation2....41
06 Traction Battery (507946037001)....43
Chapter 6: Others....45
01 Labels and Decals-EU(507946047001)....45
02 Labels and Decals-US (507946047002)....47
Appendix....49
01 Electrical Circuit Diagram(508046045501)....49
02 Electrical Circuit Diagram(EN1175-2020) (508046045504)....50
03 Hydraulic Circuit Diagram(508046045502)....51
04 Consumable Parts List(507946045501)....52

Chapter 1: Drive System

01 Drive Unit Steering（507946013501）

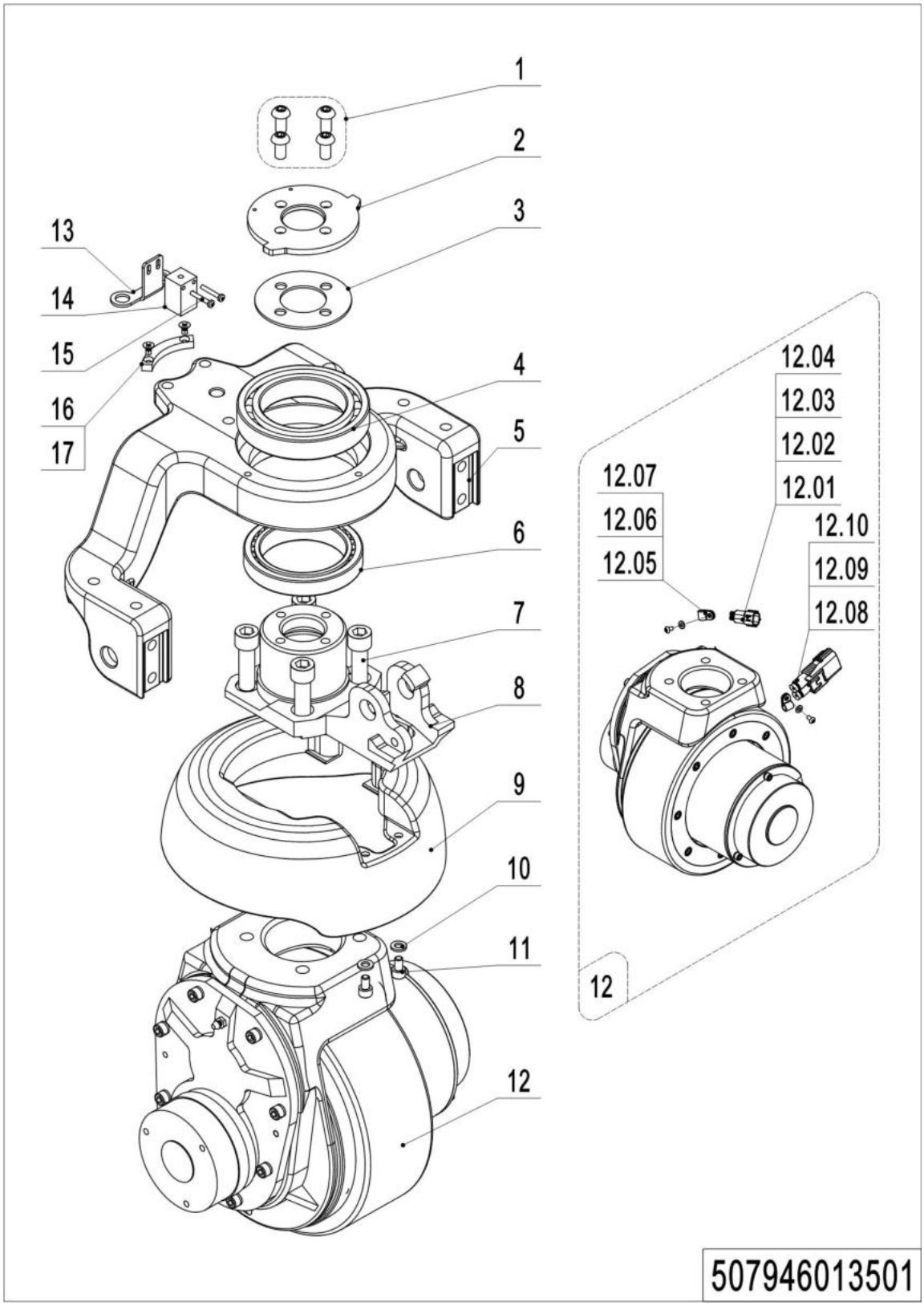

01 Drive Unit Steering (507946013501)

No.	Item Code	Mark	Item Description	Qty.	Substitute	Note
1	910200300024	1	Screw	4		
2	508013520003		Bearing Plate	1		
3	508013520004		Subplate	1		
4	910700200058	1	Bearing	1		
5	507913520000		Wheel Mount	1		
6	910700600044		Bearing	1		
7	910200200076	1	Screw	4		
8	508013520001		Flange	1		
9	508013520101		Cover	1		
10	910400100005	1	Flat Washer	2		Be sure to color your order
11	910200200033	1	Screw	2		
12	508098510078		Drive Unit(ZD,6NMPU)	1		ZD, Waterproof
12	508098510154		Drive Unit(STEKI,8NMPU)	1		ZD
12	508098510057		Driving Unit(INTORQ, 8NMPU)	1		ZD, Waterproof
12	508098510082		Drive Unit(ZD,8NMPU)	1		ZD, Non-slip (Waterproof)
12	508013510001		Drive Unit (STEKI,8NMPU)	1		YX210
12	508013510003		Drive Unit (XDL,8NMPU)	1		YX210
12	508013510002		Drive Unit (STEKI,8NMPU)	1		YX210, waterproof
12	508013510004		Drive Unit (XDL,8NMPU)	1		YX210, waterproof
12	508013510005		Drive Unit (STEKI,8NMPU)	1		YX210,Nonslip(Waterproof)
12.01	920400200004	1	Connector	1		
12.02	920400200003	1	Connector	1		
12.03	920400200017	1	Connector	2		
12.04	920400200018	1	Connector	2		
12.05	910200700001	1	Screw	2		
12.06	910400100003	1	Flat Washer	2		
12.07	921300200001		Cable Clamp	2		
12.08	920400200152	1	Connector	1		
12.08	920400200169	1	Connector	1		waterproof
12.09	920400200150	1	Connector	2		
12.09	920400200172	1	Connector	2		waterproof

1= Supply as package. 2= Supply with constraints. 3= Phasing-out supply. 4= Supply as assembly. 5= Check other tables.

01 Drive Unit Steering（507946013501）Continuation

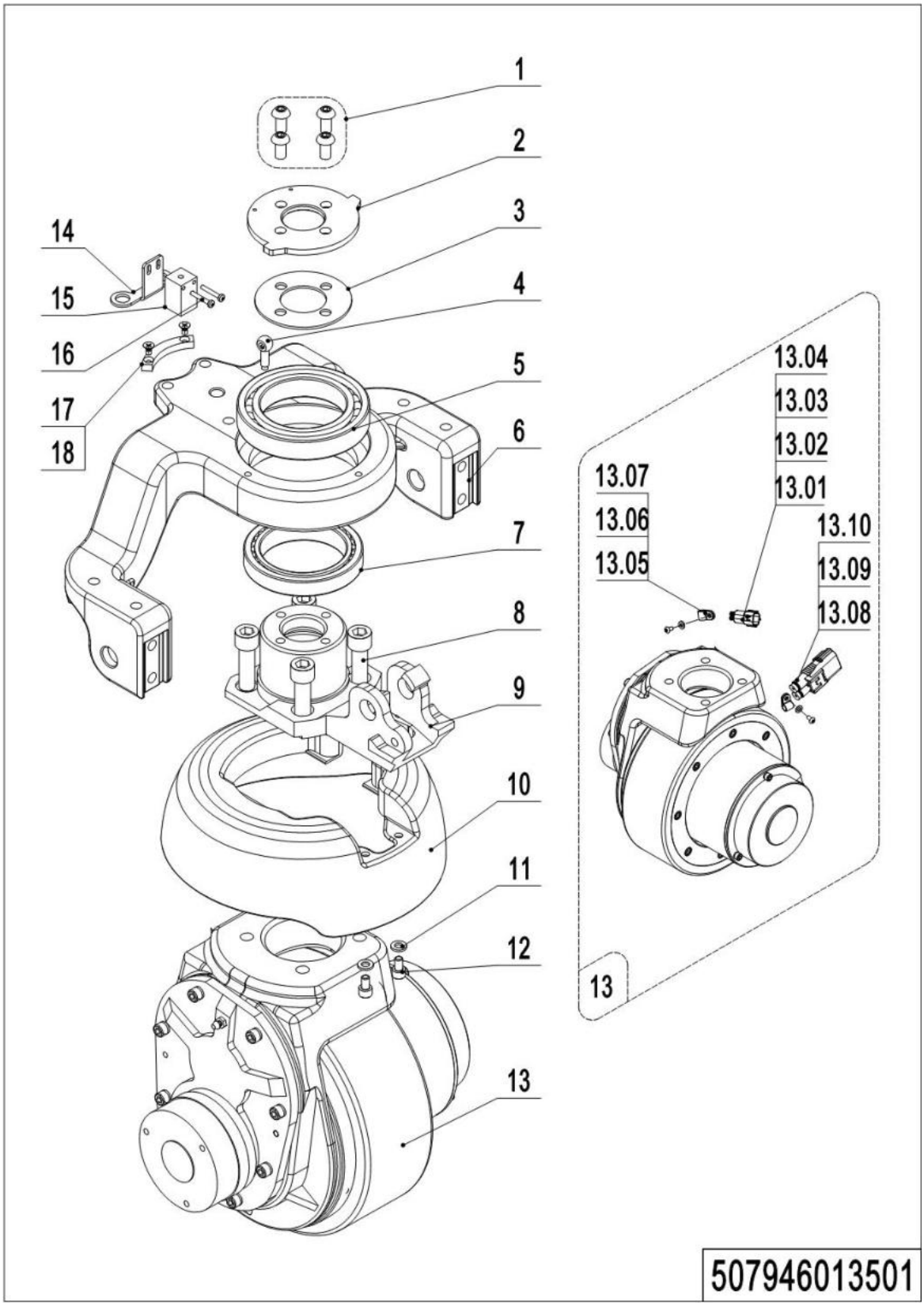

01 Drive Unit Steering (507946013501) Continuation

No.	Item Code	Mark	Item Description	Qty.	Substitute	Note
12.10	920400200171	1	Connector	2		waterproof
13	508033020003		Bracket	1		
14	920200400017		Proximity Switch	1		
15	910200500015	1	Screw	2		
16	508033020002		Induction Block	1		
17	910200700001	1	Screw	2		

02 Drive Assembly(ZD)(507946013001)

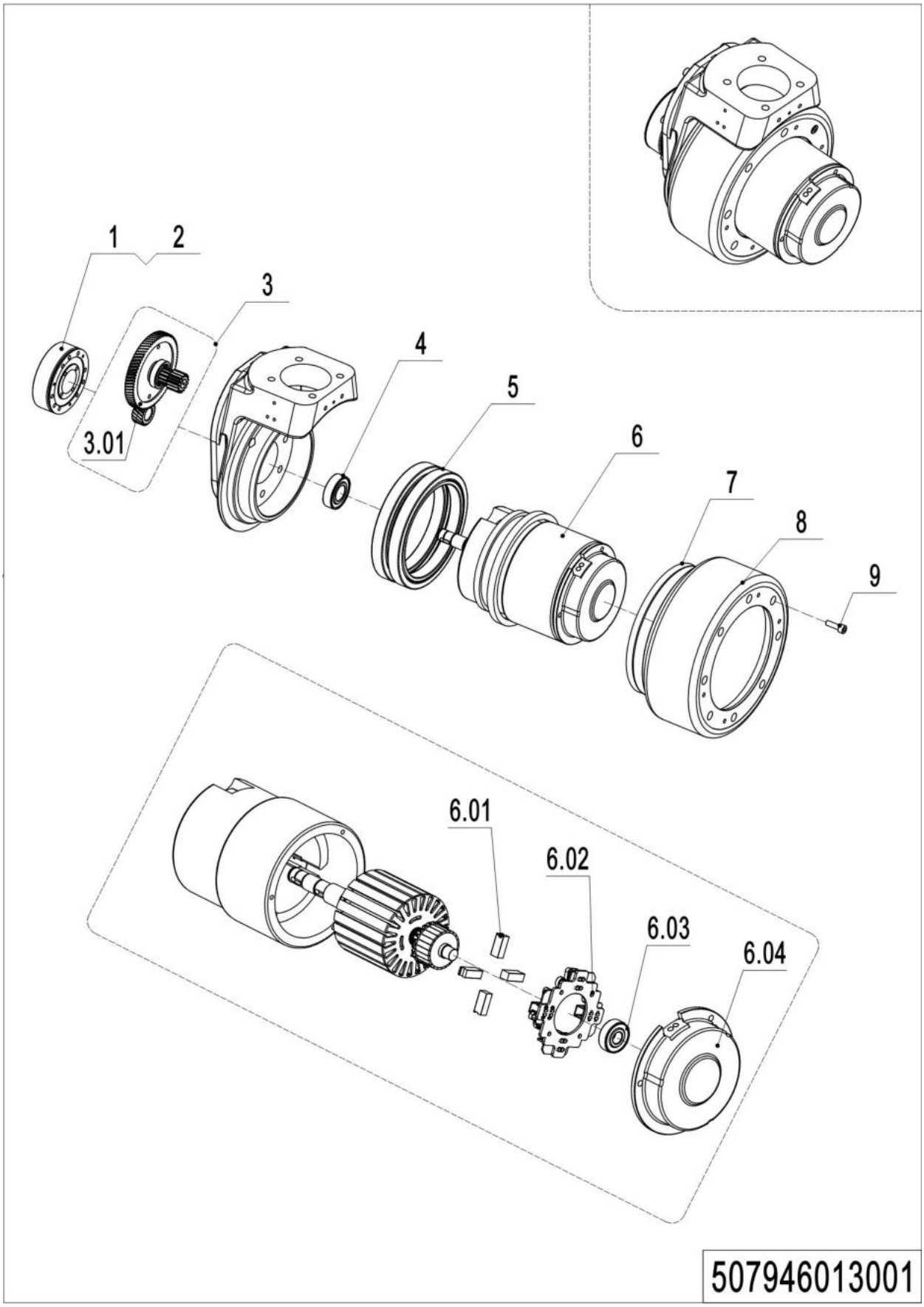

1= Supply as package. 2= Supply with constraints. 3= Phasing-out supply. 4= Supply as assembly. 5= Check other tables.

02 Drive Assembly(ZD) (507946013001)

No.	Item Code	Mark	Item Description	Qty.	Substitute	Note
1	508098520002	2	Brake	1		ZD,6NM
1	940700100015		Brake	1		STEKI,8NM
1	508098520028		Brake	1		INTORQ,8NM
2	508098520040		Rubber Strip	1		
3	508098510015	2	Gear Components	1		
3.01	508098520004		Gear	1		
4	910700200004		Bearing	1		
5	508098520011	2	Gear Ring	1		
6	508098510016	2	Motor	1		
6	508098510071		Motor	1		Waterproof plug
6.01	508098520000	2	Carbon Brush	4		
6.02	508098520001	2	Carbon Brush Holder	1		
6.03	910700200016		Bearing	1		
6.04	508098520036	2	End Cap	1		
7	508098520032		Seal	1		
8	508098520003		Wheel	1		
8	508098520026		Wheel	1		Non-slip
9	910200200167		Screw Kits	8		

1= Supply as package. 2= Supply with constraints. 3= Phasing-out supply. 4= Supply as assembly. 5= Check other tables.

03 Drive Assembly (YX210)(507946013002)

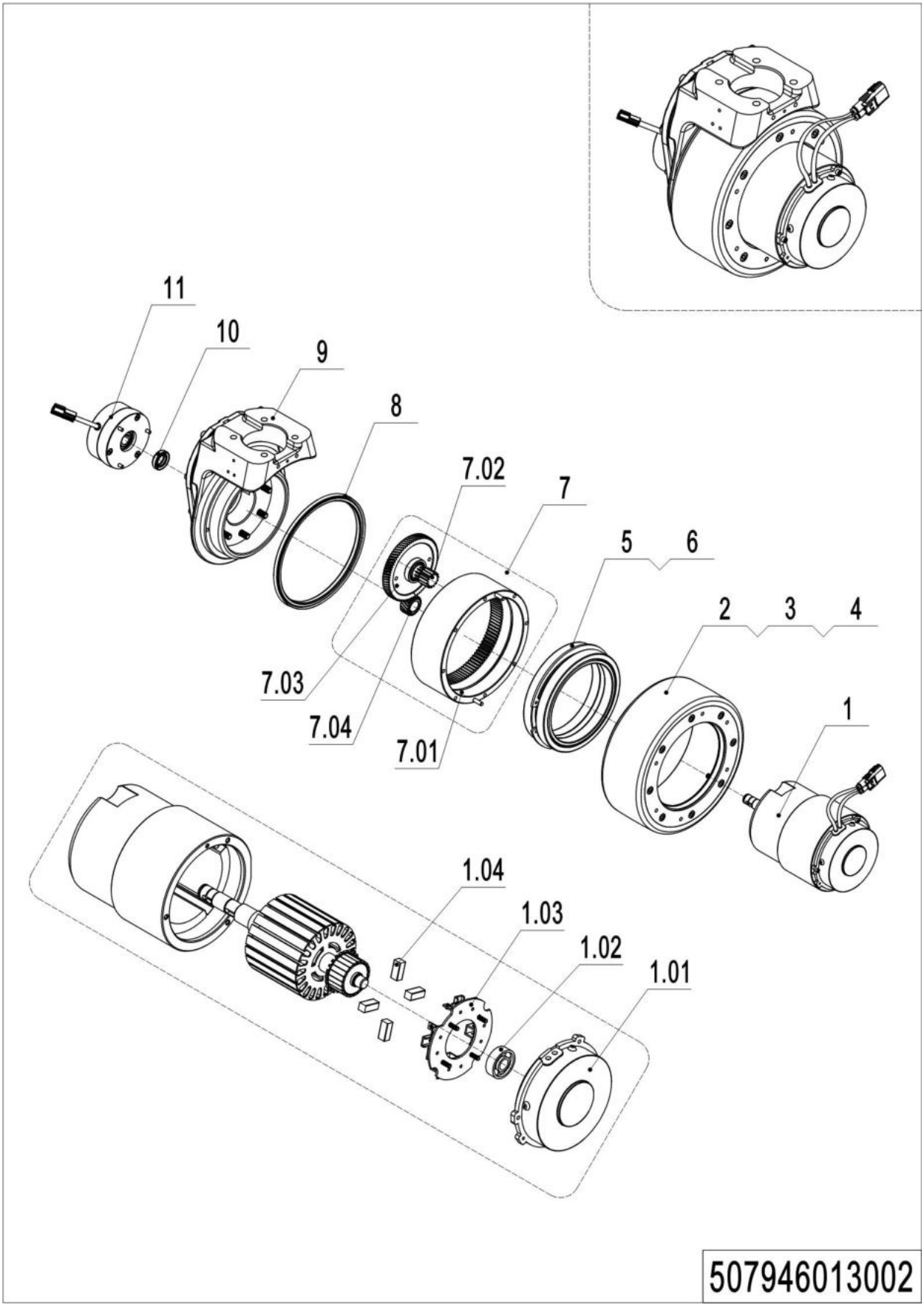

03 Drive Assembly (YX210) (507946013002)

No.	Item Code	Mark	Item Description	Qty.	Substitute	Note
1	508098510162		Motor	1		
1	508098510158		Motor	1		Waterproof plug
1.01	507798520022		End Cap	1		
1.02	910700200016		Bearing	1		
1.03	507798520024		Carbon Brush Holder	1		
1.04	507798520023		Carbon brush	4		
2	961004000009		Wheel	1		
2	961004200001		Wheel	1		Non-slip
3	961004000011		Oil seal	1		
4	910200200167		Screw	8		
5	910700200044		Bearing	2		
6	961004000007		Sleeve	1		
7	507798510006		Gear Components	1		
7.01	961004000006		Gear	1		
7.02	961004000003		Gear Shaft	1		
7.03	961004000002		Gear	1		
7.04	961004000005		Gear	1		
8	961004000010		Oil seal	1		
9	507798510007		Gearbox	1		
10	961000700012		Oil seal	1		
11	940700100015		Brake	1		STEKI
11	961002200004		Brake	1		XDL

1= Supply as package. 2= Supply with constraints. 3= Phasing-out supply. 4= Supply as assembly. 5= Check other tables.

Chapter 2: Hydraulic System

01 Hydraulic Components(507946023501)

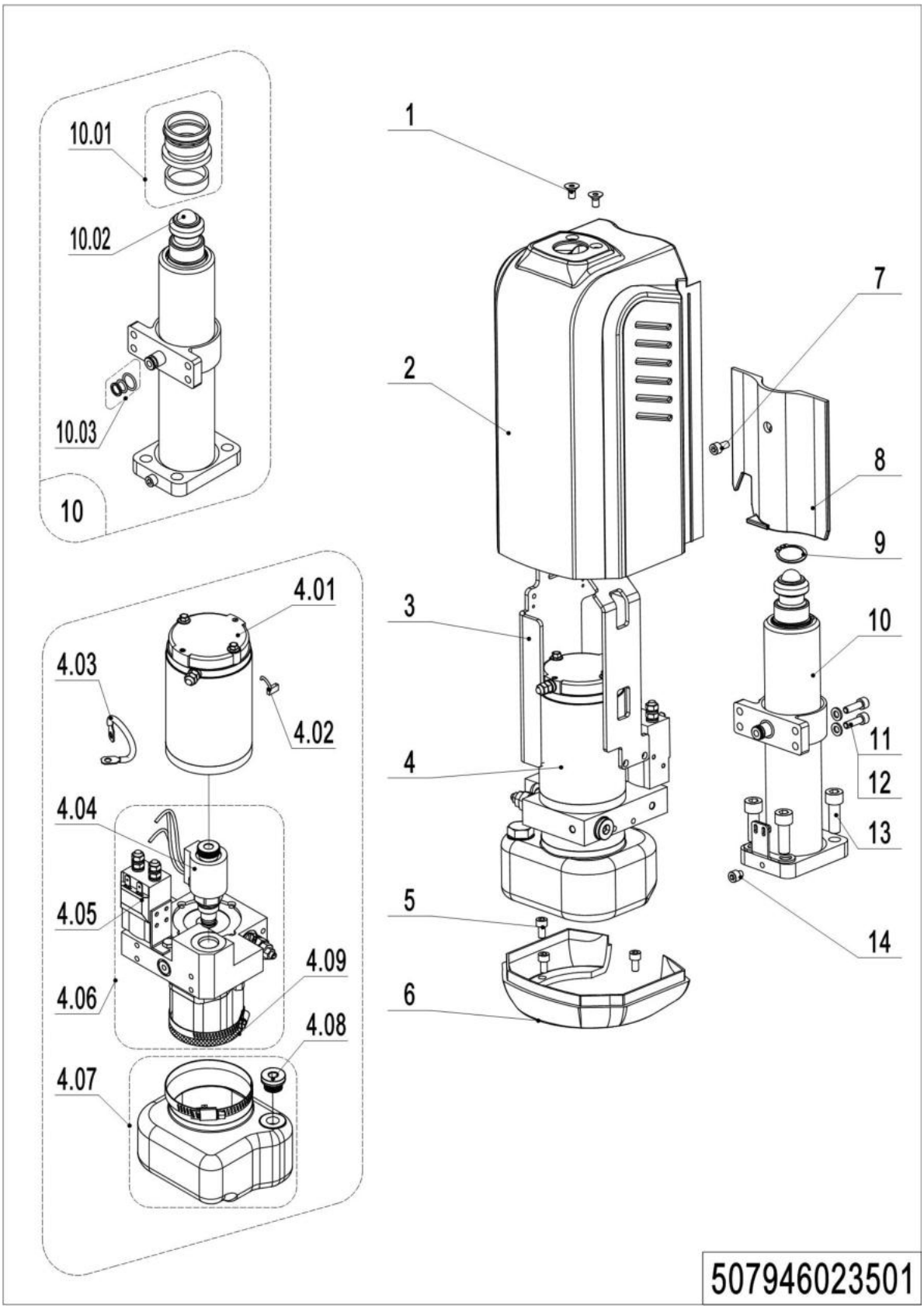

01 Hydraulic Components (507946023501)

No.	Item Code	Mark	Item Description	Qty.	Substitute	Note
1	910200400015	1	Screw	2		
2	508024020101		Cover	1		Be sure to color your order
3	508024010002		Mounting Rack	1		
4	508098510163		Pump Unit	1		
4.01	508098510020	2	Motor	1		
4.02	508098520008	2	Brush	1		
4.03	508098520007	2	Cables	1		
4.04	508098510034	2	Magnetic Valve	1		
4.05	508098510021	2	Switch	1		
4.06	508098510053	2	Gear Pump	1		
4.07	508098510023	2	Tank	1		
4.08	508598510009	2	Cap-Tank	1		
4.09	508098520037	2	Filter	1		
5	910200200033	1	Screw	3		
6	508024020102		Shield	1		Be sure to color your order
7	910200200171	1	Screw	1		
8	508024020103		Cover	1		
9	910401300017	1	Circlip	1		
10	508024010003		Cylinder	1		
10.01	508098510018		Seal Kit	1		
10.02	910701100019		Steel Ball	1		
10.03	508598510004		Seal Kit	1		
11	910200200036	1	Screw	7		
12	910400100005	1	Flat Washer	7		
13	910200200077	1	Screw	4		
14	910200200160	1	Screw	1		

1= Supply as package. 2= Supply with constraints. 3= Phasing-out supply. 4= Supply as assembly. 5= Check other tables.

02 Hydraulic Components (EN1175-2020)（507946023502）

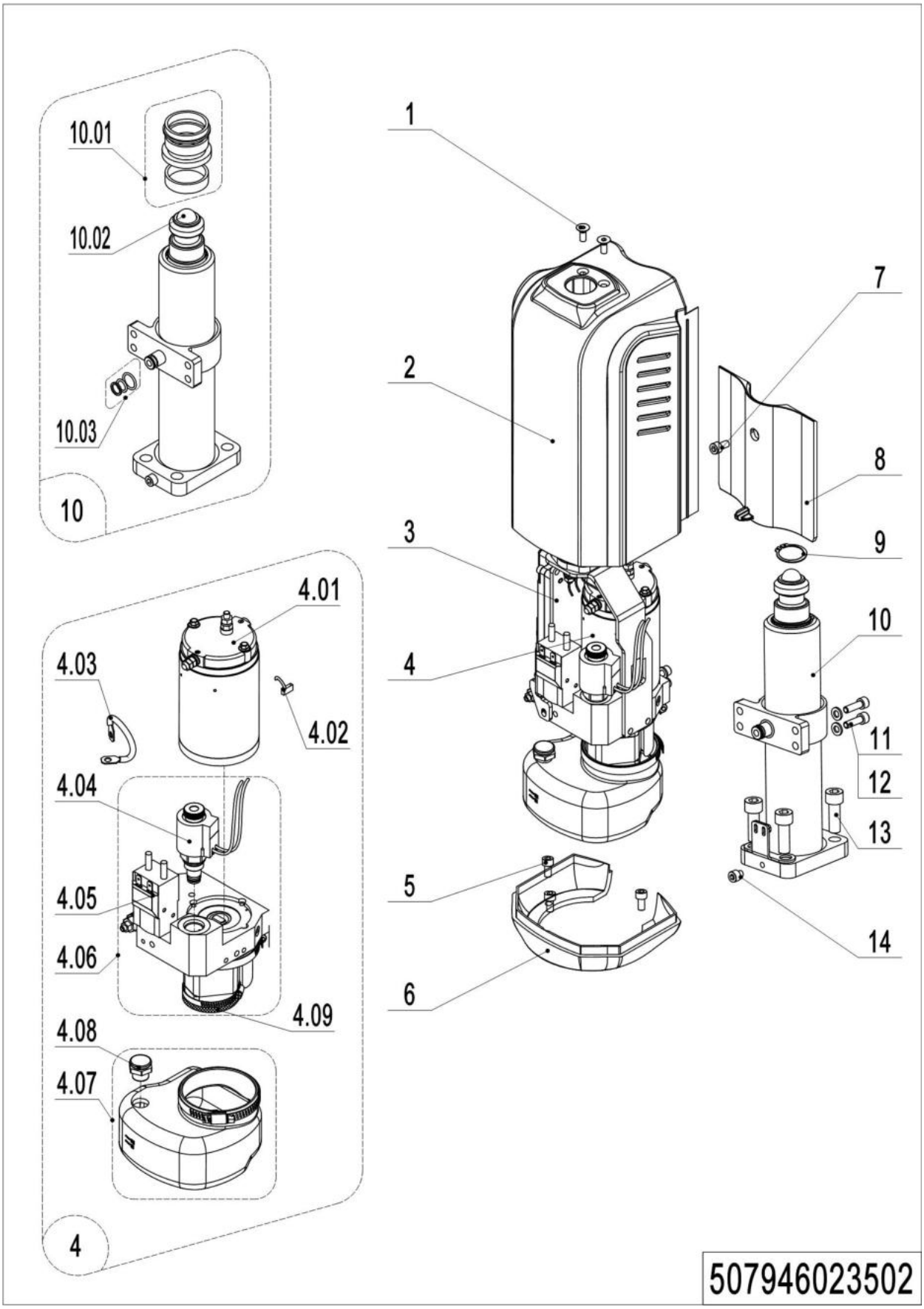

02 Hydraulic Components (EN1175-2020) (507946023502)

No.	Item Code	Mark	Item Description	Qty.	Substitute	Note
1	910200400053	1	Screw	2		
2	508024020101		Cover	1		Be sure to color your order
3	508024010007		Mounting Rack	1		
4	508098510170		Pump Unit	1		
4.01	508098510107	2	Motor	1		
4.02	508098520008	2	Brush	1		
4.03	508098520007	2	Cables	1		
4.04	508098510034	2	Magnetic Valve	1		
4.05	508098510021	2	Switch	1		
4.06	508098510108	2	Gear Pump Kits	1		
4.07	508098510118	2	Tank	1		
4.08	508598510009	2	Cap-Tank	1		
4.09	508098520037	2	Filter	1		
5	910200200033	1	Screw	3		
6	508024020102		Shield	1		Be sure to color your order
7	910200200171	1	Screw	1		
8	508024020104		Cover	1		
9	910401300017	1	Circlip	1		
10	508024010003		Cylinder	1		
10.01	508098510018		Seal Kit	1		
10.02	910701100019		Steel Ball	1		
10.03	508598510004		Seal Kit	1		
11	910200200036	1	Screw	7		
12	910400100005	1	Flat Washer	7		
13	910200200077	1	Screw	4		
14	910200200160	1	Screw	1		

1= Supply as package. 2= Supply with constraints. 3= Phasing-out supply. 4= Supply as assembly. 5= Check other tables.

Chapter 3: Truck Frame

01 Truck Frame (507946038501)

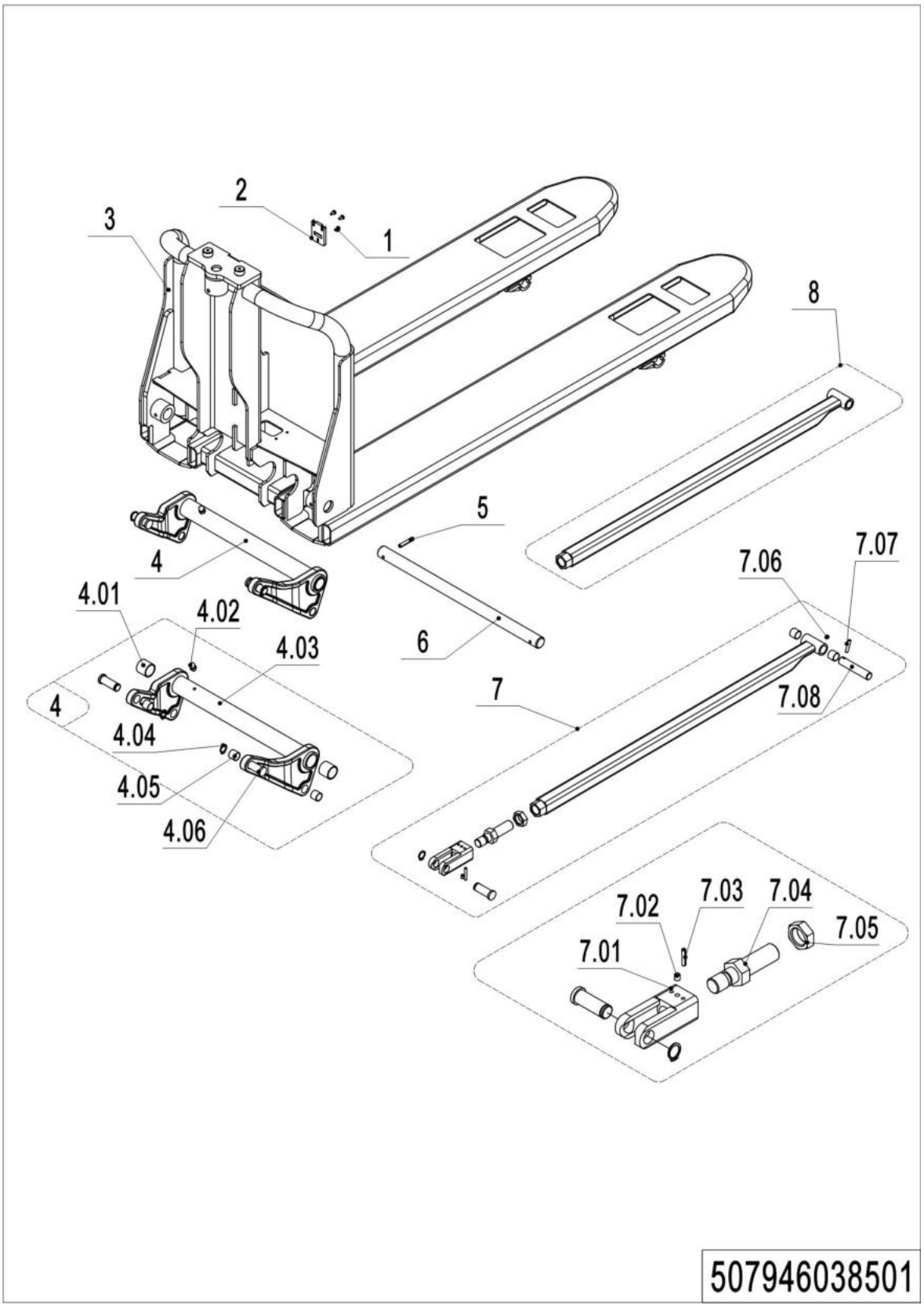

1= Supply as package. 2= Supply with constraints. 3= Phasing-out supply. 4= Supply as assembly. 5= Check other tables.

01 Truck Frame (507946038501)

No.	Item Code	Mark	Item Description	Qty.	Substitute	Note
1	910200500034	1	Screw	3		
2	508038520109		Lock	1		
3	507938510000	2	Chassis(EU540x1150)	1		
3	507938510002	2	Chassis(540x1150/single wheel)	1		
3	507938510004	2	Chassis(EU520x1150)	1		
3	507938510005	2	Chassis(520x1150/single wheel)	1		
3	507938510007	2	Chassis(EU520x800)	1		
4	508098510001		Rise Arm(540)	1		
4	507998510001		Rise Arm(520)	1		
4.01	940500100097		Bushing	2		
4.02	911200100002		Oil Cup	1		
4.03	508038510010		Rise Arm(540)	1		
4.03	507938510006		Rise Arm(520)	1		
4.04	910401300007		Circlip	4		
4.05	940500100083		Bushing	8		
4.06	508038520041		Pin	4		
5	910600400041	1	Spring Pin	2		
6	507938520012		Axle	1		
7	508098510038		Push Rod Kit(800)	2		
7	508098510002		Push Rod Kit(1150)	2		
7.01	508038520028		Push Rod Fork	2		
7.02	910201000005	1	Screw	2		
7.03	910600500001	1	Spring Pin	4		
7.04	508038520029		Threaded Rod	2		
7.05	910300400008	1	Nut	2		
7.06	911200100001	1	Oil Cup	2		
7.07	910600400024	1	Spring Pin	2		
7.08	502338520030		Axle	2		
8	508038510016		Push Rod (800)	2		
8	508038510011		Push Rod (1150)	2		

02 Truck Frame (507946038502)

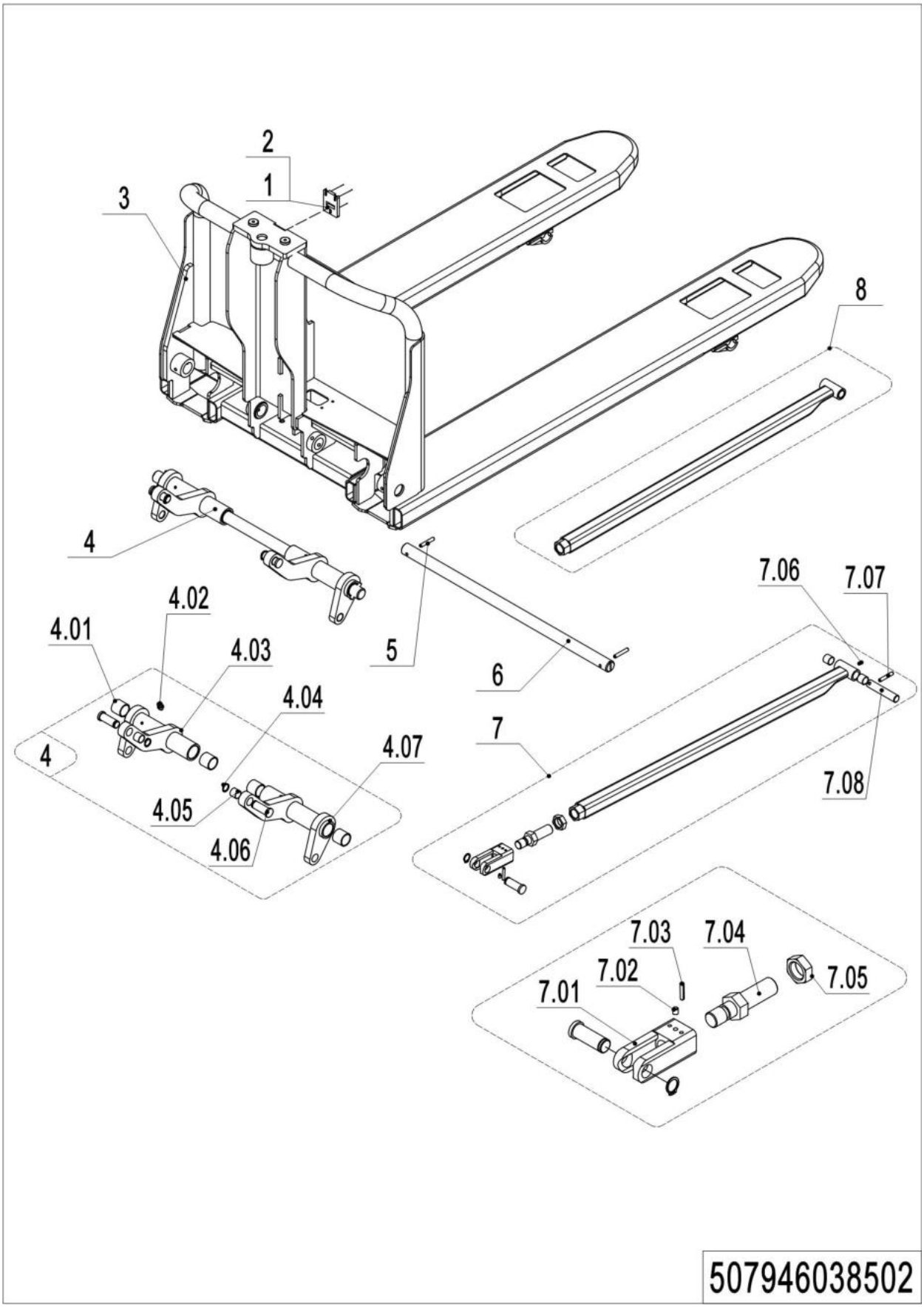

02 Truck Frame (507946038502)

No.	Item Code	Mark	Item Description	Qty.	Substitute	Note
1	508038520109		Lock	1		
2	910200500034	1	Screw	3		
3	507938510001	2	Chassis(EU685x1150)	1		
3	507938510003	2	Chassis(685x1150/single wheel)	1		
3	507938510008	2	Chassis(EU685x1000)	1		
4	508098510003		Rise Arm	1		
4.01	940500100097		Bushing	2		
4.02	911200100002	1	Oil Cup	2		
4.03	508038510012		Rise Arm	1		
4.04	910401300007		Circlip	4		
4.05	940500100083		Bushing	8		
4.06	508038520041		Pin	4		
4.07	508038510013		Rise Arm	1		
5	910600400041	1	Spring Pin	2		
6	507938520022		Axle	1		
7	508098510043		Push Rod Kit(1000)	2		
7	508098510002		Push Rod Kit(1150)	2		
7.01	508038520028		Push Rod Fork	2		
7.02	910201000005	1	Screw	2		
7.03	910600500001	1	Spring Pin	4		
7.04	508038520029		Threaded Rod	2		
7.05	910300400008	1	Nut	2		
7.06	911200100001	1	Oil Cup	2		
7.07	910600400024	1	Spring Pin	2		
7.08	502338520030		Axle	2		
8	508038510017	2	Push Rod (1000)	2		
8	508038510011	2	Push Rod (1150)	2		

Chapter 4: Steering System, Braking System, Wheels

01 Tiller Unit(507946011001)

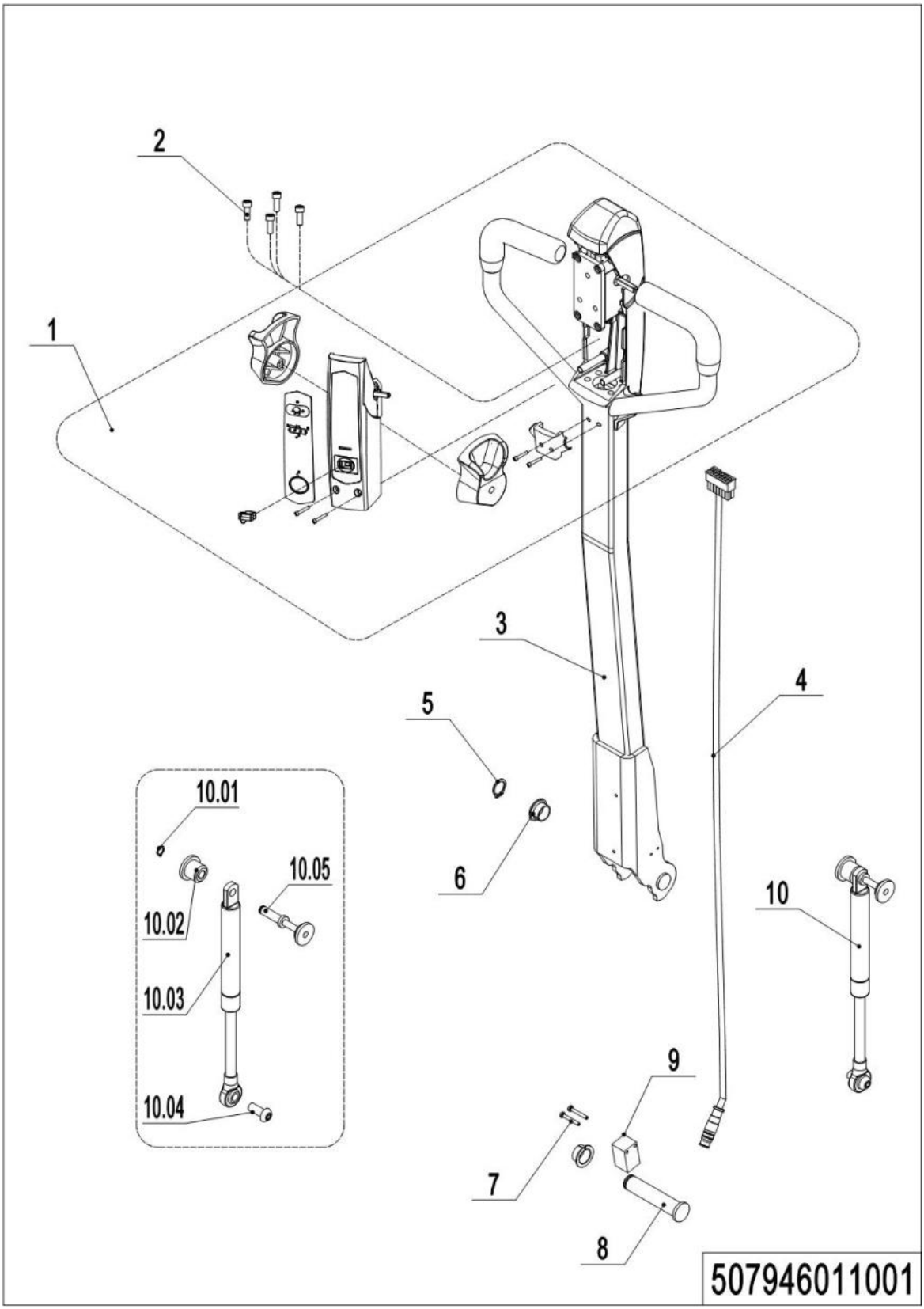

1= Supply as package. 2= Supply with constraints. 3= Phasing-out supply. 4= Supply as assembly. 5= Check other tables.

01 Tiller Unit(507946011001)

No.	Item Code	Mark	Item Description	Qty.	Substitute	Note
1	922100100031		Control Handle	1		
1	922100100121		Control Handle	1		EN1175-2020
2	910200200036	1	Screw	4		
3	507911010000		Tiller	1		
4	508033010001		Wire Harness	1		
5	910401300006		Circlip	1		
6	940500200001		Bushing	2		
7	941101100001	1	Screw	2		
8	508011020004		Pin	1		
9	920200400027		Proximity Switch	1		
10	508098510084		Gas Spring Kit	1		
10.01	910401300001		Circlip	1		
10.02	508011020005		Fixing Base	1		
10.03	508011010001		Gas Spring	1		
10.04	941100100011	1	Screw	1		
10.05	508011010002		Pin	1		

1= Supply as package. 2= Supply with constraints. 3= Phasing-out supply. 4= Supply as assembly. 5= Check other tables.

02 Control Handle (507946011002)

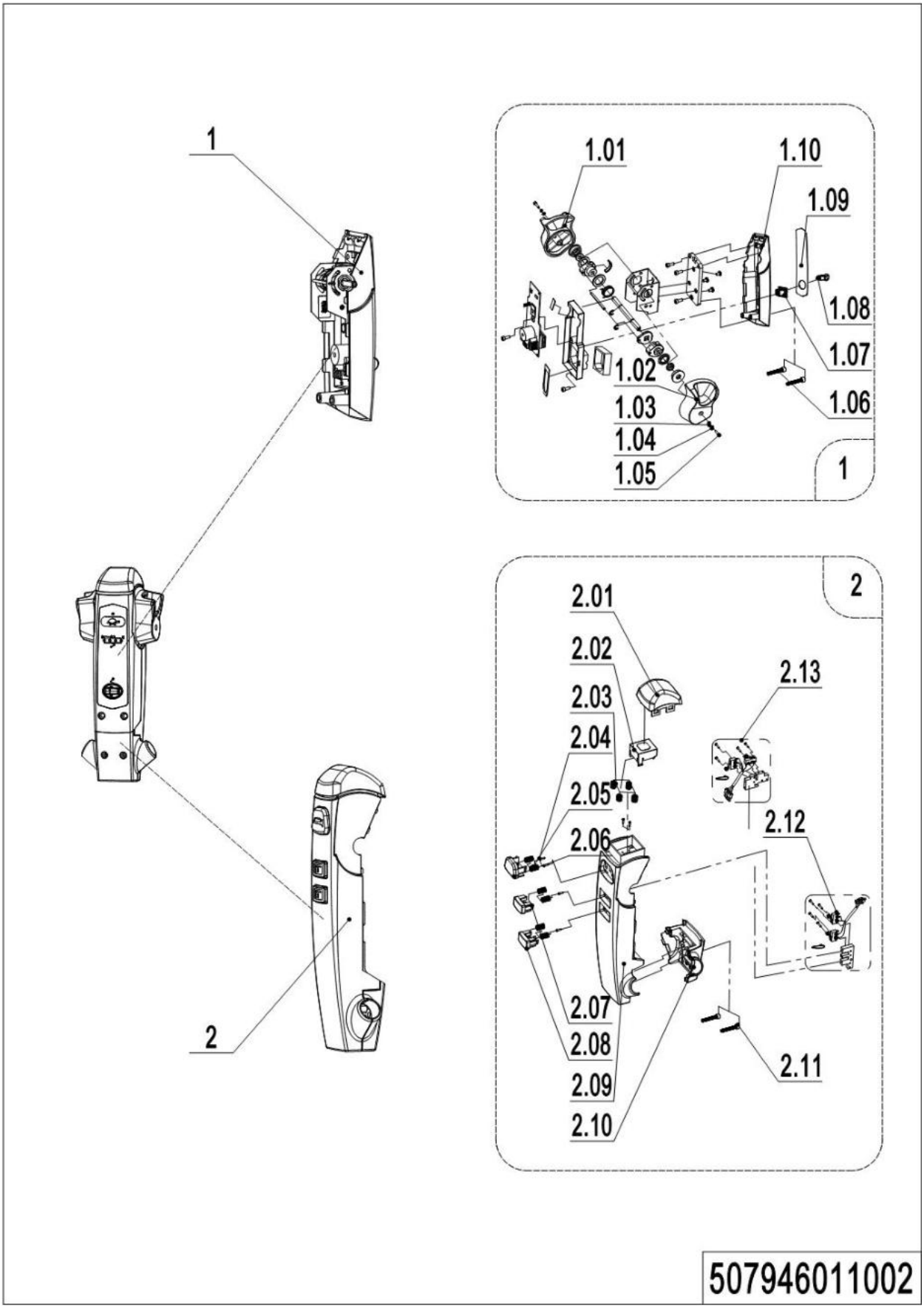

1= Supply as package. 2= Supply with constraints. 3= Phasing-out supply. 4= Supply as assembly. 5= Check other tables.

02 Control Handle (507946011002)

No.	Item Code	Mark	Item Description	Qty.	Substitute	Note
1	507998510016		Handle Cap Assembly	1		
1.01	508098520020		Traction lever	1		
1.02	508098520014		Traction lever	1		
1.03	910400100002		Flat Washer	2		
1.04	910400500002		Spring Washer	2		
1.05	508698520004		Screw	2		
1.06	910200200159		Screw	2		
1.07	507998520013		Pedestal	1		
1.08	508698520000		Key	2		
1.09	508698520006		Cap-control handle	1		
1.10	507998520012		Handle Cap	1		
2	507998510018		Bottom Cover Assembly	1		
2.01	508098520018		Cap,Break Switch	1		
2.02	508098520019		Bracket	1		
2.03	502311020018		Spring	4		
2.04	508698520003		Screw	8		
2.05	502311020022		Spring	6		
2.06	508098520029		Horn Button	1		
2.07	508098520030		Button	1		
2.08	508098520031		Button	1		
2.09	507998520000		Handle Cap	1		
2.10	508698520001		Handle Cap	1		
2.11	910200200028		Screw	2		
2.12	508698510006		Microswitch Kits	1		
2.13	508698510005		Microswitch Kits	1		

03 Control Handle(EN1175-2020)（507946011003）

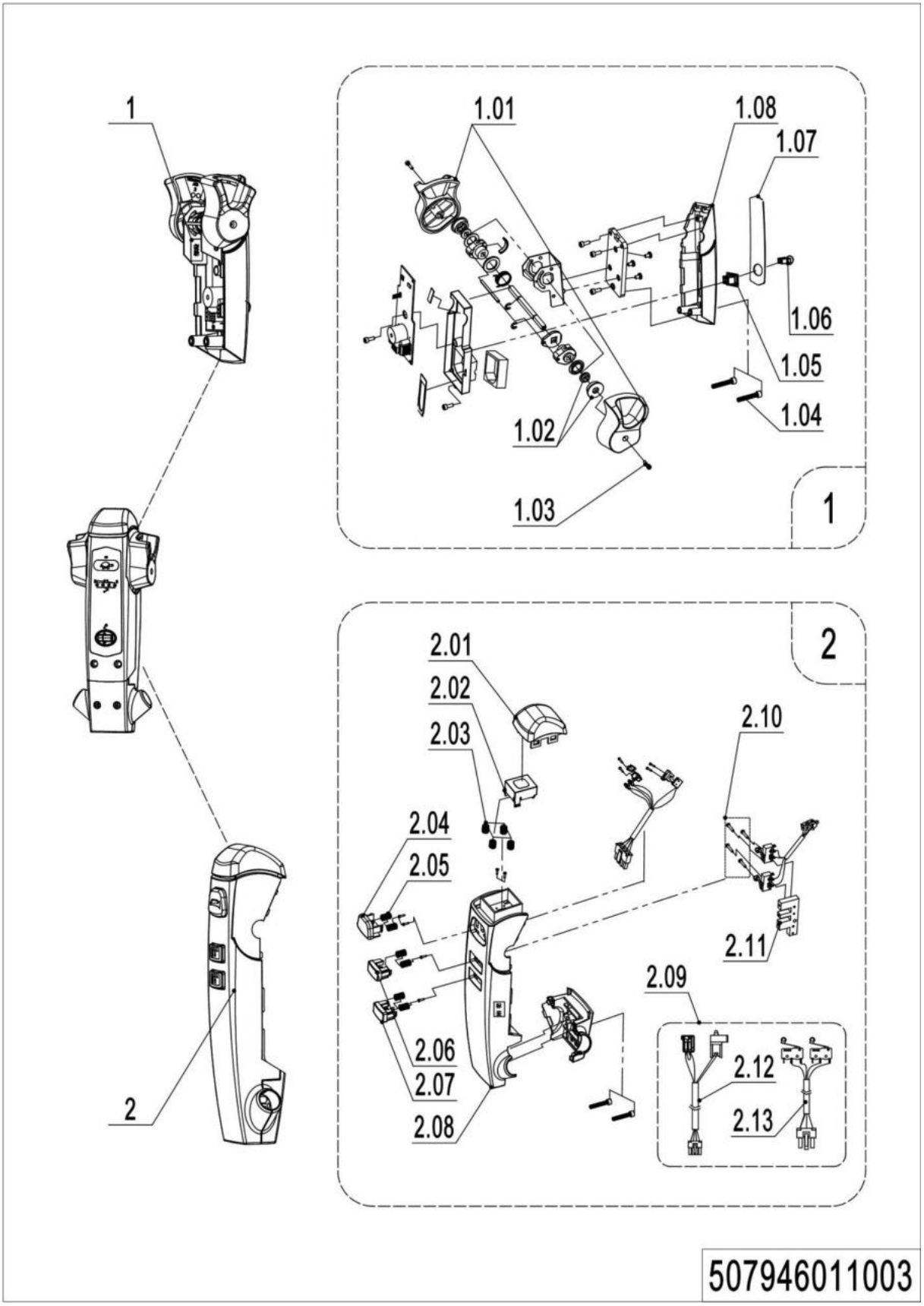

03 Control Handle(EN1175-2020)（507946011003）

No.	Item Code	Mark	Item Description	Qty.	Substitute	Note
1	507998510020		Bottom Cover Assembly	1		
1.01	507998510021		Traction lever kits	1		
1.02	507998510022		Bushing kits	2		
1.03	508098520086		Bolt Kits	2		
1.04	910200200159		Screw	2		
1.05	507998520013		Pedestal	1		
1.06	508698520000		Key	2		
1.07	508698520006		Cap-control handle	1		
1.08	507998520012		Handle Cap	1		
2	507998510019		Handle Cap Assembly	1		
2.01	508098520018		Cap,Break Switch	1		
2.02	508098520019		Bracket	1		
2.03	502311020018		Spring	4		
2.04	508098520029		Horn Button	1		
2.05	502311020022		Spring	6		
2.06	508098520030		Button	1		
2.07	508098520031		Button	1		
2.08	507998520000		Handle Cap	1		
2.09	508098510112		Microswitch Kits	1		
2.10	508098520087		ST2.5x12	1		
2.11	508098520090		Fixing Mount	1		For lift and low switch
2.12	507998520014		Microswitch	1		Emergency reversal and horn
2.13	507998520015		Microswitch	1		Lift and low

04 Load Wheel（507946017001）

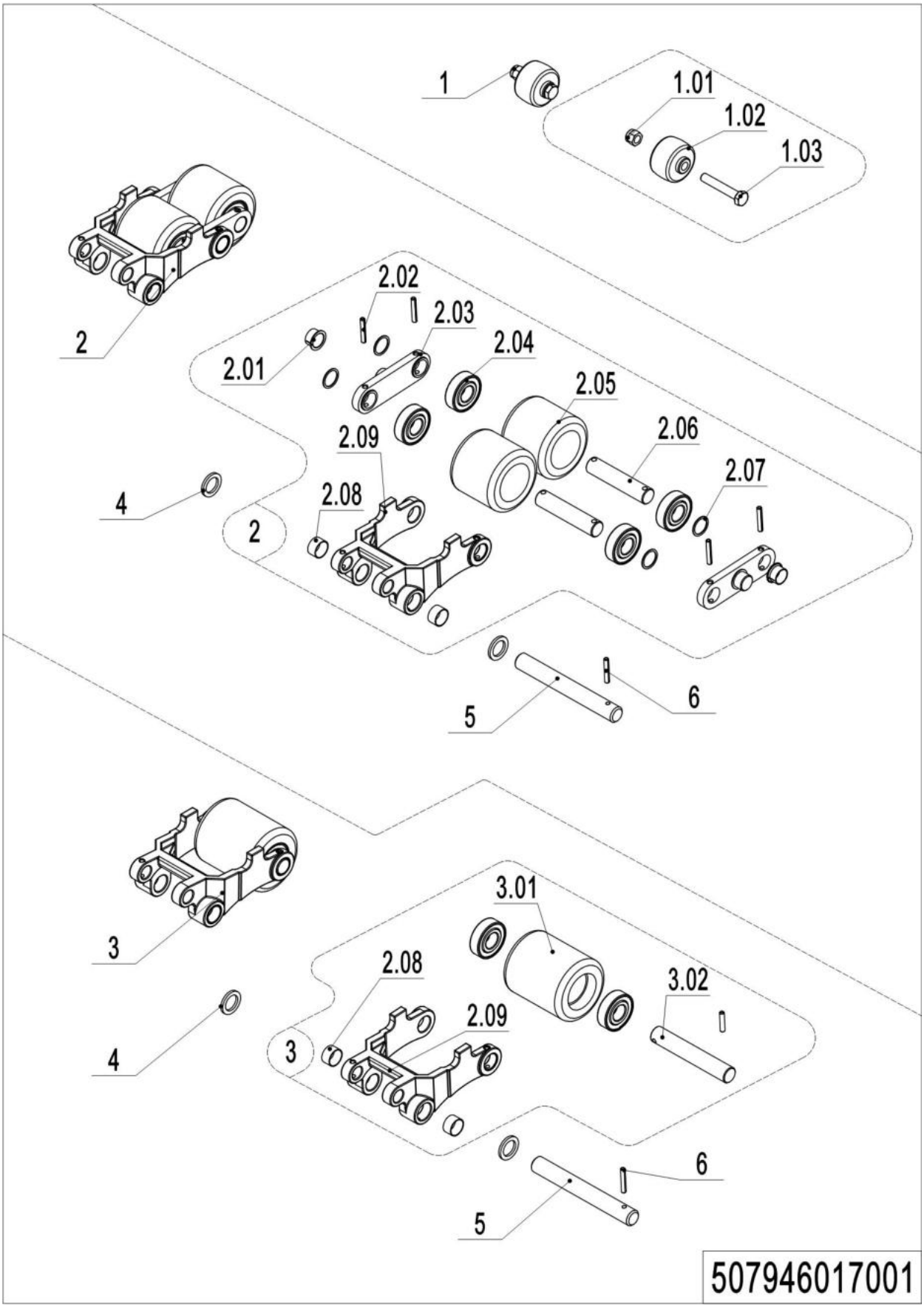

1= Supply as package. 2= Supply with constraints. 3= Phasing-out supply. 4= Supply as assembly. 5= Check other tables.

04 Load Wheel (507946017001)

No.	Item Code	Mark	Item Description	Qty.	Substitute	Note
1	502398510003		Pulley components	2		
1.01	910300500005	1	Nut	2		
1.02	505638520039		Running Pulley	2		
1.03	941100200019	1	Bolt	2		
2	508098510049		Wheel	2		
2.01	940500200038		Bushing	4		
2.02	910600400027	1	Spring Pin	8		
2.03	502317020000		Plate	4		
2.04	910700200019		Bearing	8/4		Double / single
2.05	940300300005		WheelΦ80x70	4		
2.06	502317020001		Axle	4		
2.07	940600500013		Washer	8/4		Double / single
2.08	940500100088		Bushing	4		
2.09	508038520130		Riser	2		
3	508098510050		Wheel	2		
3.01	940300300023		WheelΦ80x93	2		
3.02	301017020001		Axle	2		
4	325017020000		Washer	4		
5	508038520030		Axle	2		
6	910600400025		Spring Pin	2		

05 Caster（507946016501）

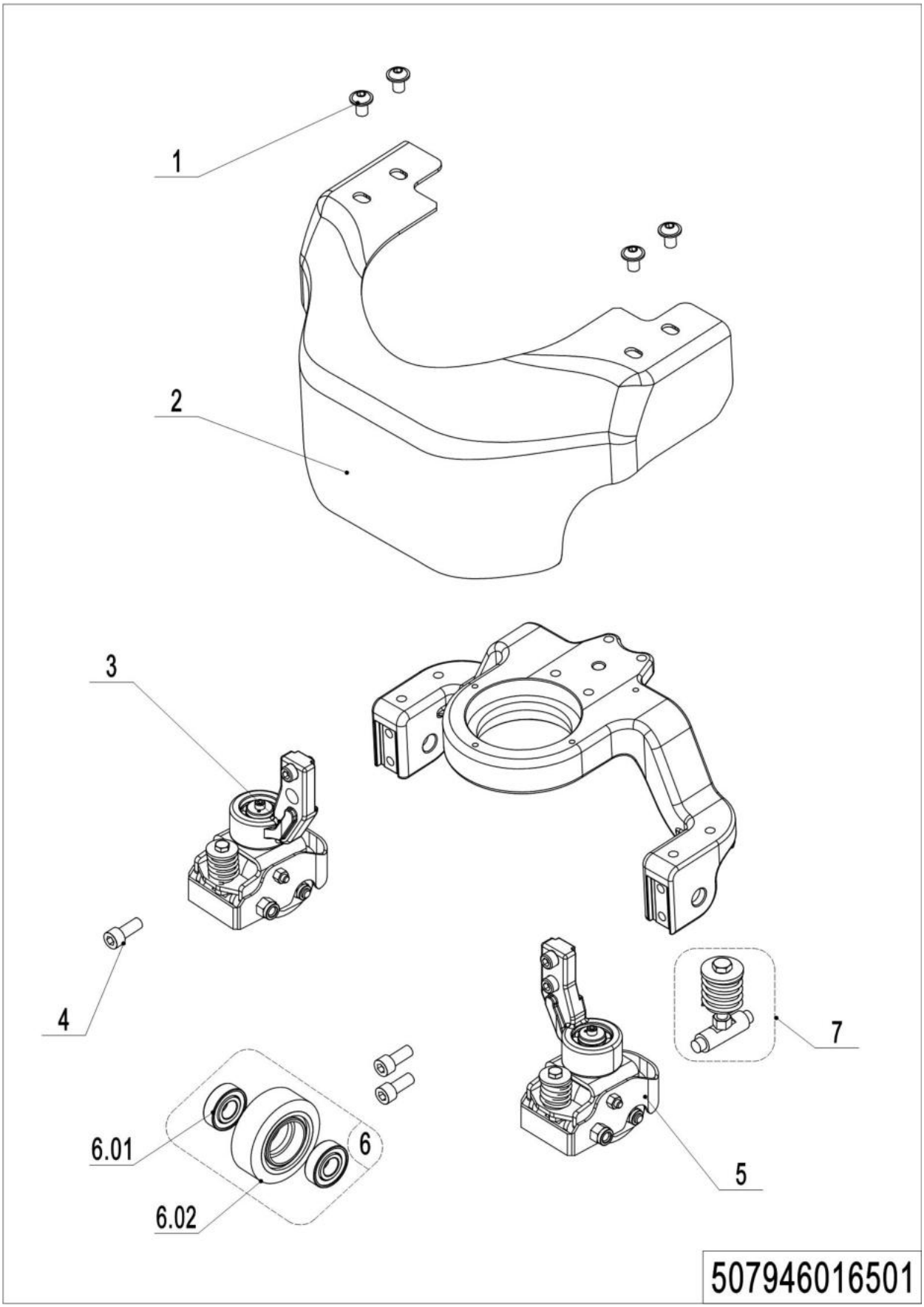

1= Supply as package. 2= Supply with constraints. 3= Phasing-out supply. 4= Supply as assembly. 5= Check other tables.

05 Caster(507946016501)

No.	Item Code	Mark	Item Description	Qty.	Substitute	Note
1	941100100005	1	Screw	4		
2	508016520000		Apron	1		35 mm off the ground
2	508016520008		Apron	1		45 mm off the ground
2	508016510006		Apron	1		35 mm off the ground
2	508016510011		Apron	1		45 mm off the ground
3	508016510002		Caster Assembly	2		
4	910200200182	1	Screw	4		
5	508016510005		Caster Assembly	1		
6	502398510015	2	Load Wheel Kit	2		
6.01	910700200018		Bearing	4		
6.02	940300300017		WheelΦ80x30	2		
7	508098510047		Spring Components	2		

1= Supply as package. 2= Supply with constraints. 3= Phasing-out supply. 4= Supply as assembly. 5= Check other tables.

06 Caster(without)（507946016502）

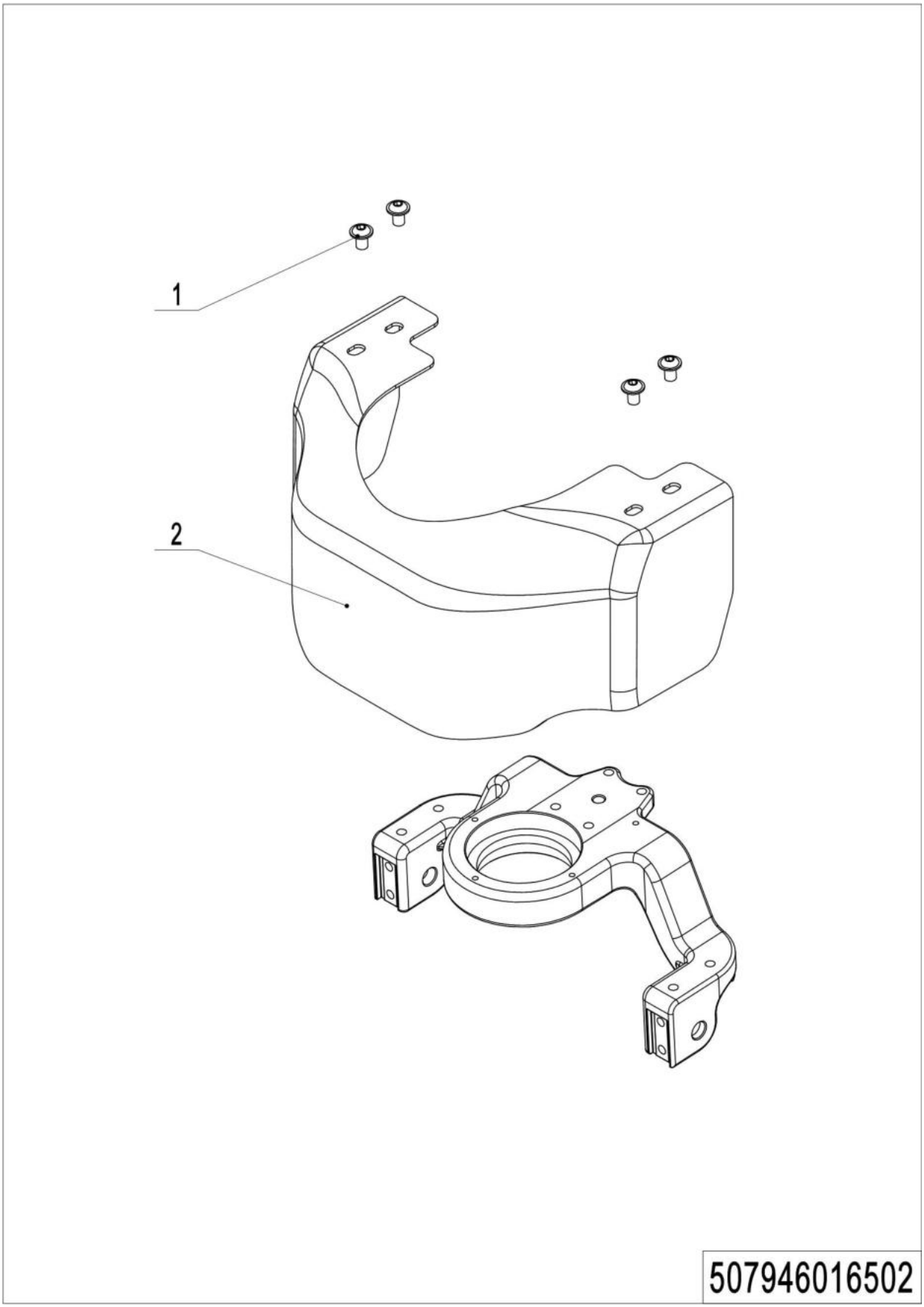

1= Supply as package. 2= Supply with constraints. 3= Phasing-out supply. 4= Supply as assembly. 5= Check other tables.

06 Caster(without）(507946016502)

No.	Item Code	Mark	Item Description	Qty.	Substitute	Note
1	941100100005	1	Screw	4		
2	508016520001		Apron	1		35 mm off the ground
2	508016520009		Apron	1		45 mm off the ground
2	508016510007		Apron	1		35 mm off the ground
2	508016510010		Apron	1		45 mm off the ground

Chapter 5: Electrical Parts

01 Wire Harness (507946033001)

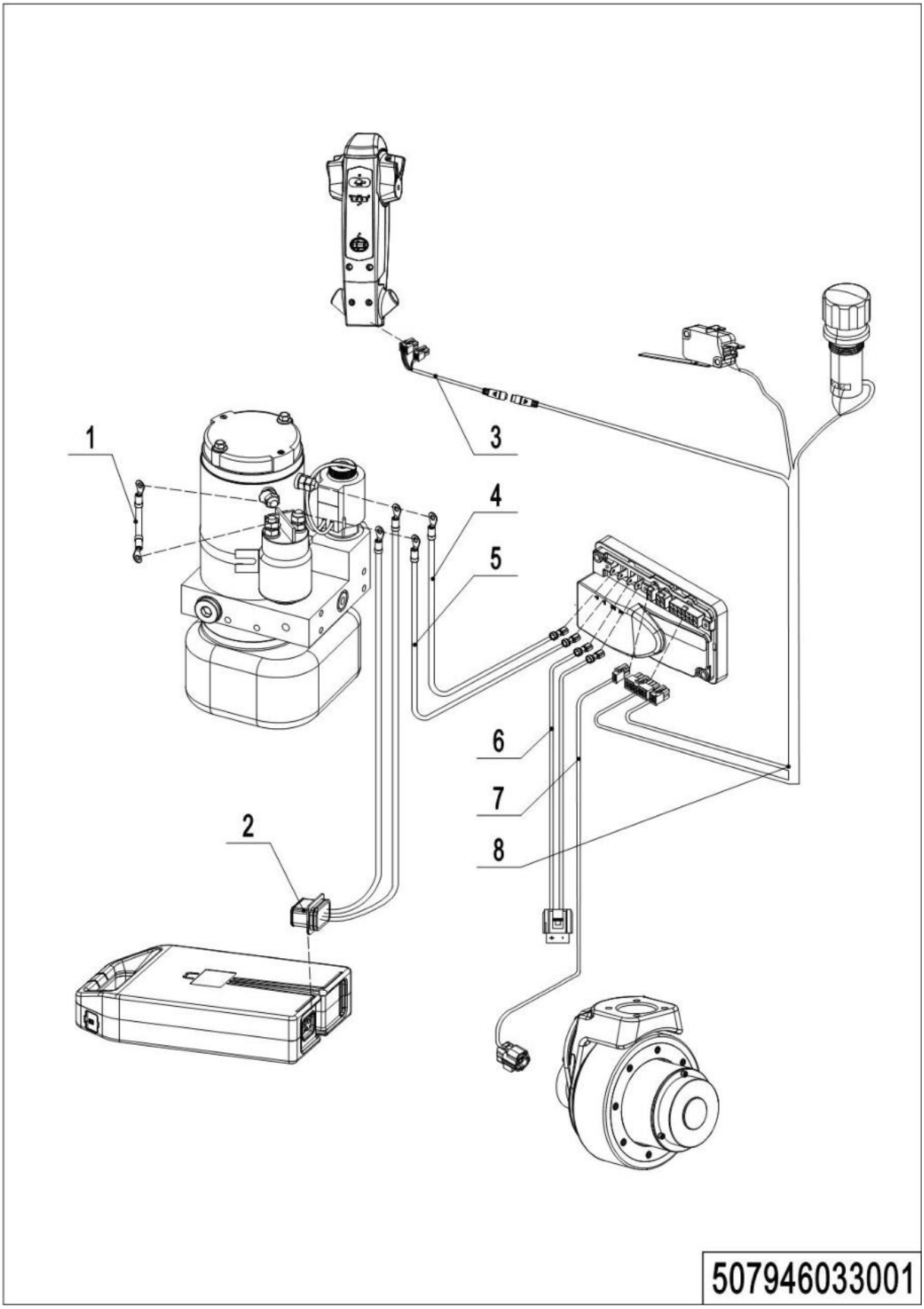

1= Supply as package. 2= Supply with constraints. 3= Phasing-out supply. 4= Supply as assembly. 5= Check other tables.

01 Wire Harness(507946033001)

No.	Item Code	Mark	Item Description	Qty.	Substitute	Note
1	508033010010		Wire Harness	1		
2	508033010003		Wire Harness	1		
3	508033010001		Wire Harness	1		
4	508033010005		Wire Harness	1		
5	508033010004		Wire Harness	1		
6	508033010006		Wire Harness	1		
6	508033010018		Wire Harness	1		Waterproof
7	508033010007		Wire Harness	1		
8	508033010000		Wire Harness	1		
8	508033010009		Wire Harness	1		JS

02 Wire Harness (EN1175-2020) (507946033003)

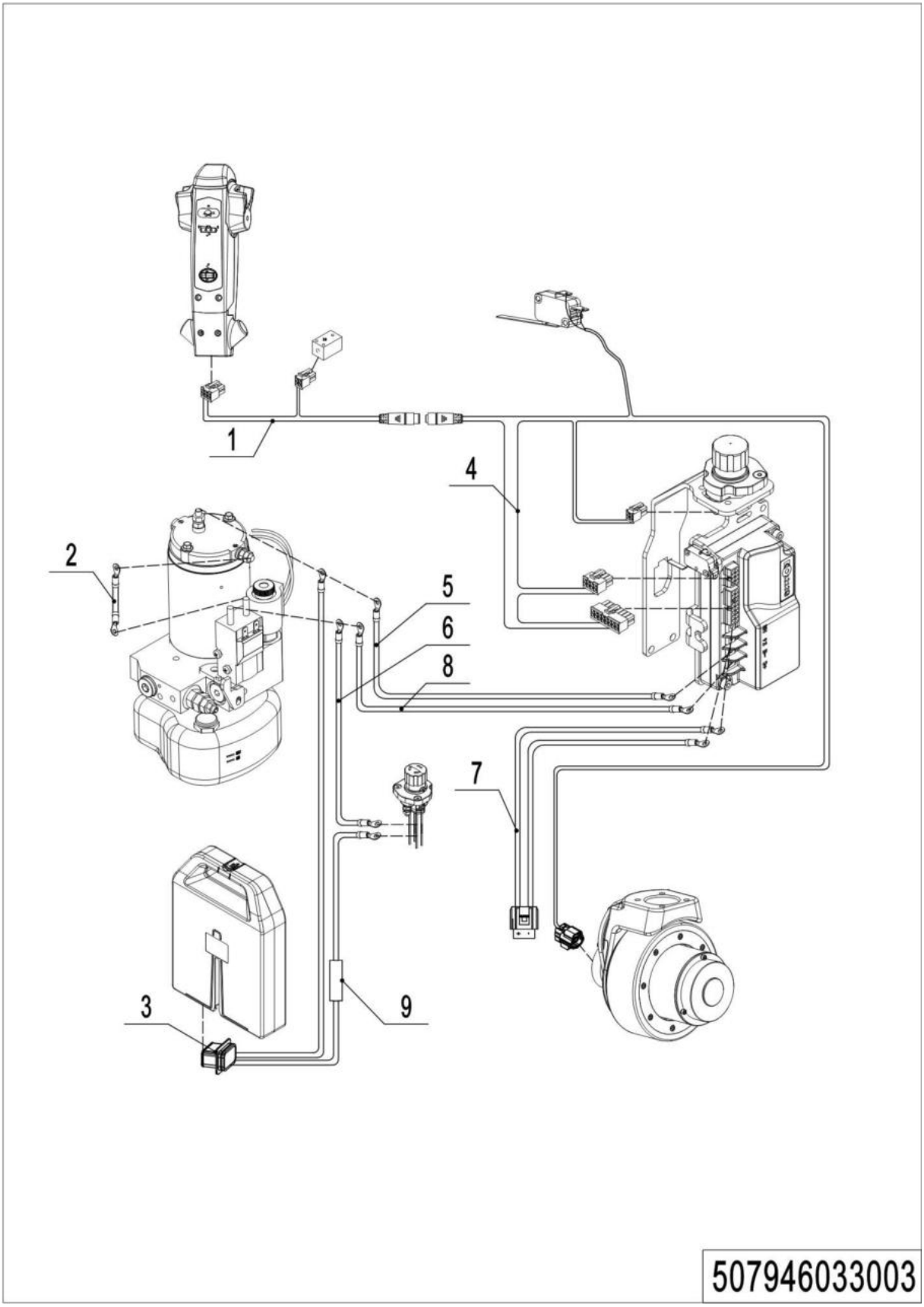

1= Supply as package. 2= Supply with constraints. 3= Phasing-out supply. 4= Supply as assembly. 5= Check other tables.

02 Wire Harness (EN1175-2020) (507946033003)

No.	Item Code	Mark	Item Description	Qty.	Substitute	Note
1	508033010040		Wire Harness	1		
2	508033010034		Wire Harness	1		
3	508033010037		Wire Harness	1		
4	508033010031		Wire Harness	1		JS
4	508033010039		Wire Harness	1		
5	508033010036		Wire Harness	1		
6	508033010033		Wire Harness	1		
7	508033010032		Wire Harness	1		Waterproof
7	508033010044		Wire Harness	1		
8	508033010035		Wire Harness	1		
9	921500100232		Magnetic ring	1		

03 Controller (507946033002)

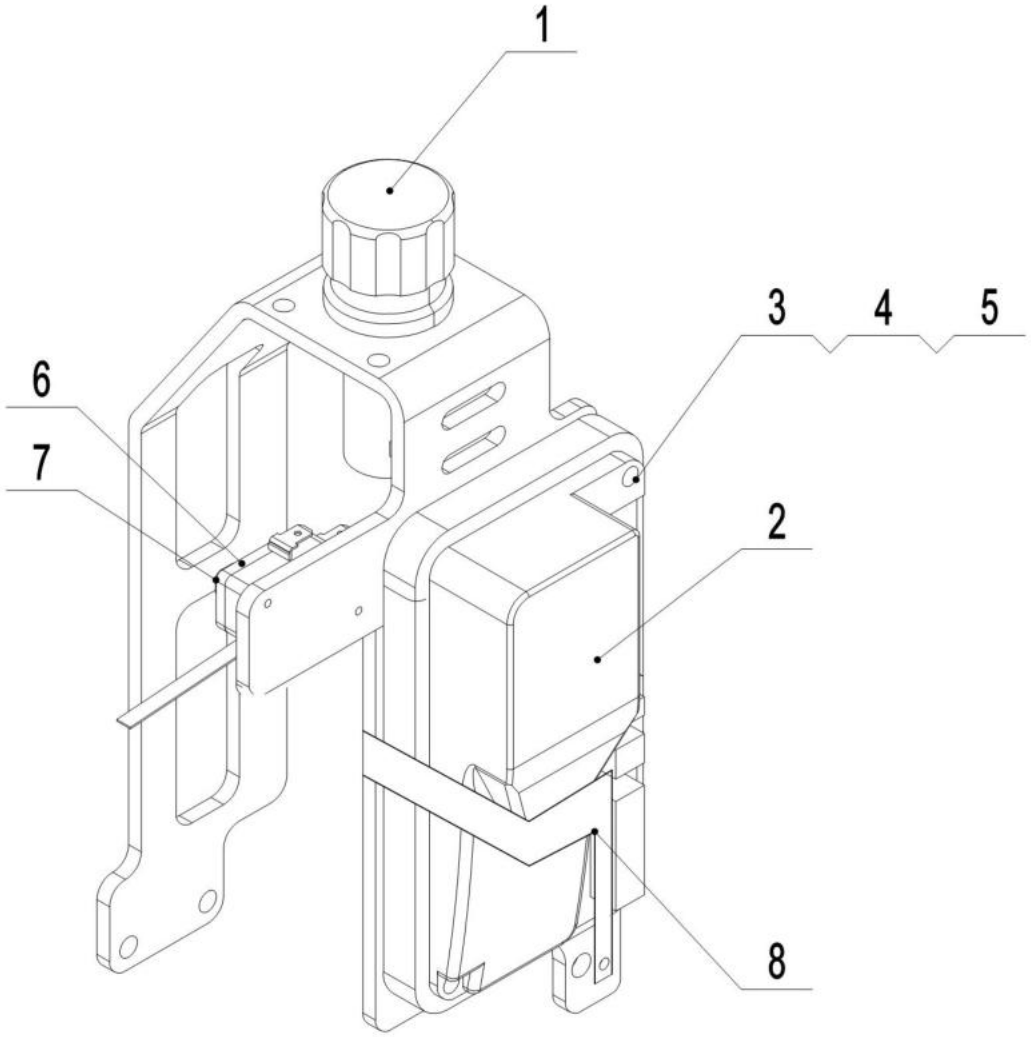

507946033002

1= Supply as package. 2= Supply with constraints. 3= Phasing-out supply. 4= Supply as assembly. 5= Check other tables.

03 Controller(507946033002)

No.	Item Code	Mark	Item Description	Qty.	Substitute	Note
1	920200100015		Emergency Button	1		
2	921400100081		Controller	1		
3	910400100004	1	Flat Washer	2		
4	910400500004	1	Spring Washer	2		
5	910200200025	1	Screw	2		
6	505698520008	1	Screw	2		
7	920200300012		Microswitch	1		
8	508033020000		Bracket	1		

1= Supply as package. 2= Supply with constraints. 3= Phasing-out supply. 4= Supply as assembly. 5= Check other tables.

04 Controller(EN1175-2020)(507946033004)

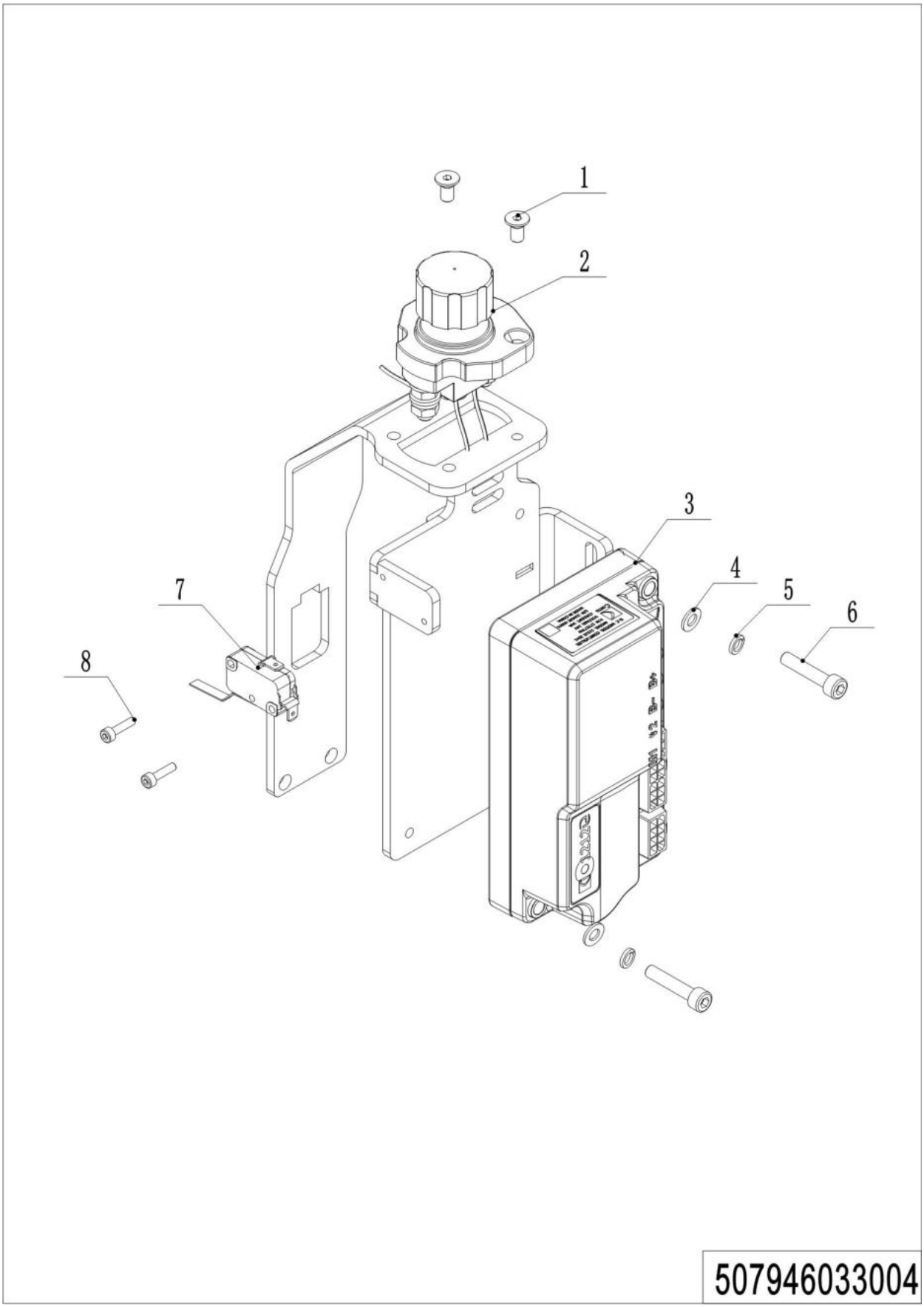

1= Supply as package. 2= Supply with constraints. 3= Phasing-out supply. 4= Supply as assembly. 5= Check other tables.

04 Controller (EN1175-2020) (507946033004)

No.	Item Code	Mark	Item Description	Qty.	Substitute	Note
1	910200400010		Screw	2		
2	920200100027		Emergency Button	1		
3	921400100174		Controller	1		1212E-2503
4	910400100003	1	Flat Washer	2		
5	910400500003	1	Spring Washer	2		
6	910200200018	1	Screw	2		
7	920200300022		Microswitch	1		
8	910200200004		Screw	1		

05 Charger (507946036501)

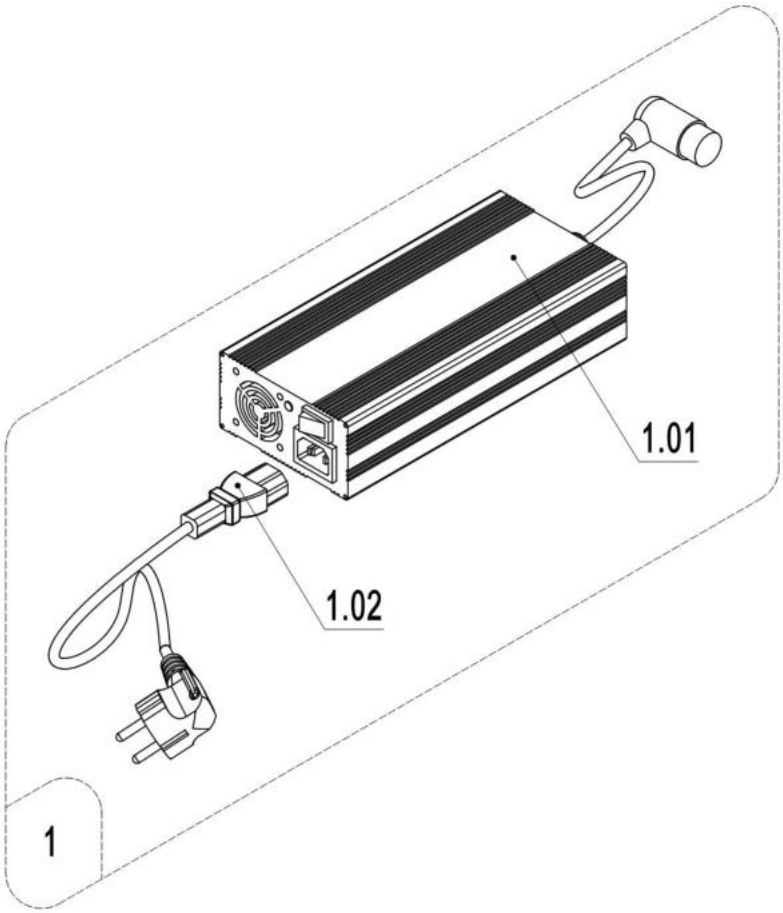

507946036501

1= Supply as package. 2= Supply with constraints. 3= Phasing-out supply. 4= Supply as assembly. 5= Check other tables.

05 Charger (507946036501)

No.	Item Code	Mark	Item Description	Qty.	Substitute	Note
1	508036510013		Charger24V12A(Asia)	1		QQE
1	508036510014		Charger24V12A(ENG)	1		QQE
1	508036510015		Charger24V12A(US)	1		QQE
1	508036510016		Charger24V12A(EU)	1		QQE
1	508036510017		Charger24V12A(AUS)	1		QQE
1	508036510018		Charger24V12A(ITA)	1		QQE
1	508036510019		Charger24V12A(SWE)	1		QQE
1	508036510020		Charger24V12A(ISR)	1		QQE
1	508036510021		Charger24V12A(BRA)	1		QQE
1	508036510022		Charger24V12A(ARG)	1		QQE
1	508036510038		Charger24V12A(ZA)	1		QQE
1	508036510037		Charger24V12A(IND)	1		QQE
1	508036510041		Charger24V12A(Asia)	1		WT
1	508036510042		Charger24V12A(ENG)	1		WT
1	508036510043		Charger24V12A(US)	1		WT
1	508036510044		Charger24V12A(EU)	1		WT
1	508036510045		Charger24V12A(AUS)	1		WT
1	508036510046		Charger24V12A(ITA)	1		WT
1	508036510047		Charger24V12A((SWE))	1		WT
1	508036510048		Charger24V12A(ISR)	1		WT
1	508036510049		Charger24V12A(BRA)	1		WT
1	508036510050		Charger24V12A(ARG)	1		WT
1	508036510051		Charger24V12A(ZA)	1		WT
1	508036510052		Charger24V12A(IND)	1		WT
1	921000200353		Charger 24V8A (Aisa-CHN)	1		SS
1	921000200464		Charger 24V8A (Aisa-ENG)	1		SS
1	508036510002		Charger24V8A(ENG)	1		SS
1	508036510003		Charger24V8A((US, JAP)	1		SS
1	508036510004		Charger24V8A(EU)	1		SS
1	508036510005		Charger24V8A(AUS)	1		SS

05 Charger (507946036501) Continuation1

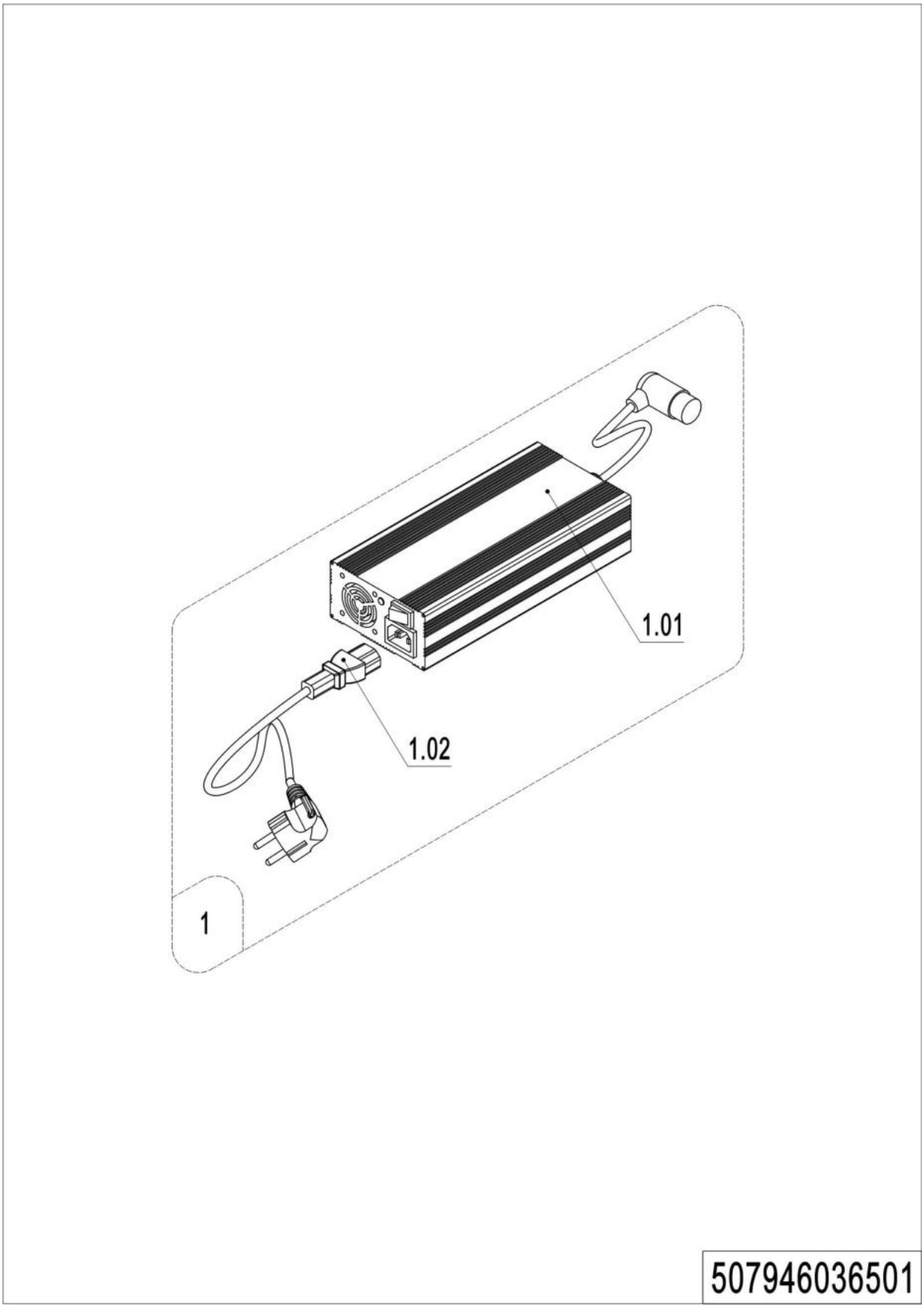

1= Supply as package. 2= Supply with constraints. 3= Phasing-out supply. 4= Supply as assembly. 5= Check other tables.

05 Charger (507946036501)Continuation1

No.	Item Code	Mark	Item Description	Qty.	Substitute	Note
1	508036510006		Charger24V8A(ITA)	1		SS
1	508036510007		Charger24V8A(SWE)	1		SS
1	508036510008		Charger24V8A(ISR)	1		SS
1	508036510009		Charger24V8A(BRA)	1		SS
1	508036510010		Charger24V8A(ARG)	1		SS
1	508036510032		Charger24V8A(EU)	1		JN
1	508036510033		Charger24V8A(IND)	1		SS
1	508036510035		Charger24V8A(EU,US)	1		SS
1	508036510036		Charger24V8A(ZA)	1		SS
1	508036510040		Charger24V8A(US)	1		QQE
1	921000200351		Charger 24V5A (Aisa-CHN)	1		SS
1	921000200463		Charger 24V5A (Aisa-ENG)	1		SS
1.01	508036510025		Charger24V5A(EU)	1		SS
1.01	921000200363		Charger 24V12A	1		QQE
1.01	921000200353		Charger 24V8A (Aisa-CHN)	1		SS
1.01	921000200464		Charger 24V8A (Aisa-ENG)	1		SS
1.01	921000200355		Charger 24V8A	1		SS(CE)
1.01	921000200354		Charger 24V8A	1		SS
1.01	921000200427		Charger 24V8A (EU)	1		ZJ
1.01	921000200466		Charger 24V8A	1		QQE
1.01	921000200351		Charger 24V5A (Aisa-CHN)	1		SS
1.01	921000200463		Charger 24V5A (Aisa-ENG)	1		SS
1.01	921000200418		Charger 24V5A (EU)	1		SS
1.02	921500200050		Power Cord(ARG)	1		
1.02	921500200024		Power Cord(AUS)	1		
1.02	921500200049		Power Cord(BRA)	1		
1.02	921500200023		Power Cord(USA)	1		
1.02	921500200022		Power Cord(EU)	1		
1.02	921500200026		Power Cord(SWE)	1		
1.02	921500200028		Power Cord(ISR)	1		

05 Charger (507946036501) Continuation2

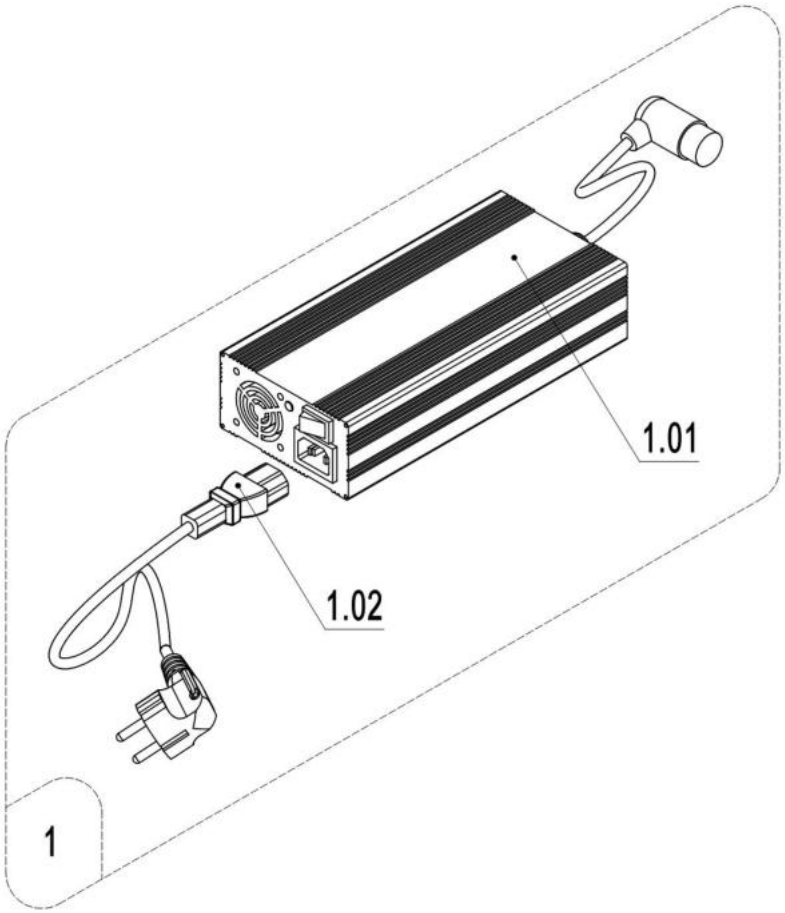

507946036501

1= Supply as package. 2= Supply with constraints. 3= Phasing-out supply. 4= Supply as assembly. 5= Check other tables.

05 Charger (507946036501) Continuation2

No.	Item Code	Mark	Item Description	Qty.	Substitute	Note
1.02	921500200025		Power Cord(ITA)	1		
1.02	921500200047		Power Cord(IND)	1		
1.02	921500200027		Power Cord(ENG)	1		
1.02	921500200038		Power Cord(ZA)	1		

06 Traction Battery (507946037001)

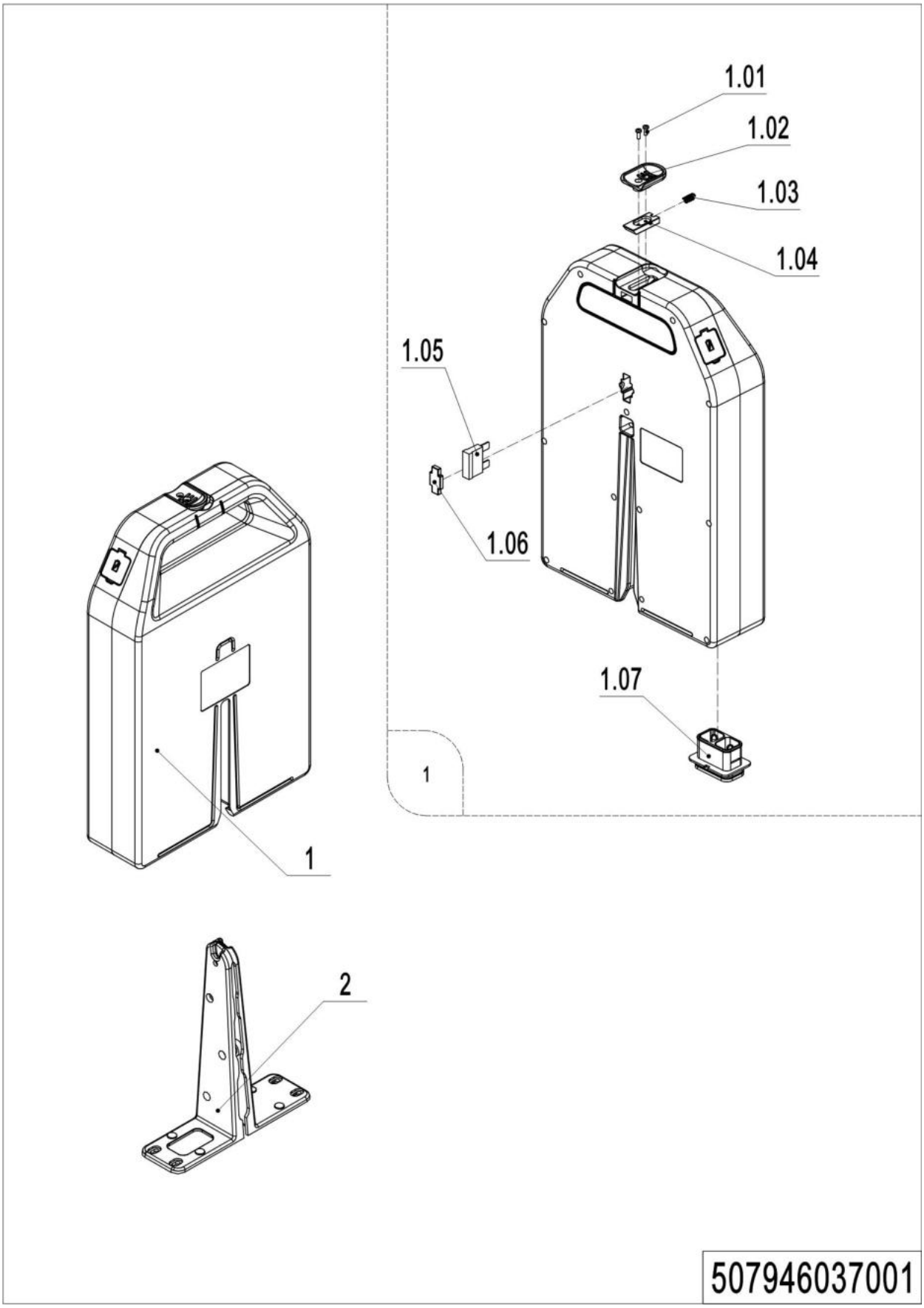

1= Supply as package. 2= Supply with constraints. 3= Phasing-out supply. 4= Supply as assembly. 5= Check other tables.

06 Traction Battery (507946037001)

No.	Item Code	Mark	Item Description	Qty.	Substitute	Note
1	508037010014		Li Battery24V20Ah	1		HF
1	508037010016		Li Battery24V20Ah	1		FDE
1	508037010021		Li Battery24V20Ah	1		HF,with heating
1	508037010017		Li Battery24V36Ah	1		FDE
1	508037010022		Li Battery24V36Ah	1		HF,with heating
1	508037010032		Li Battery24V20Ah	1		FDE，EN1175-2020
1	508037010033		Li Battery24V36Ah	1		FDE，EN1175-2020
1.01	910200500011	2	Screw	2		
1.02	508098520022	2	Plastic Handle	1		
1.03	508098520024	2	Spring	1		
1.04	508098520023	2	Fixing Mount	1		
1.05	920100200006		Fuse	1		
1.06	508098520021	2	waterproof plug	1		
1.07	508098510069	2	Rubber Cover	1		
2	508033010020		Battery Rack	1		

Chapter 6: Others

01 Labels and Decals-EU(507946047001)

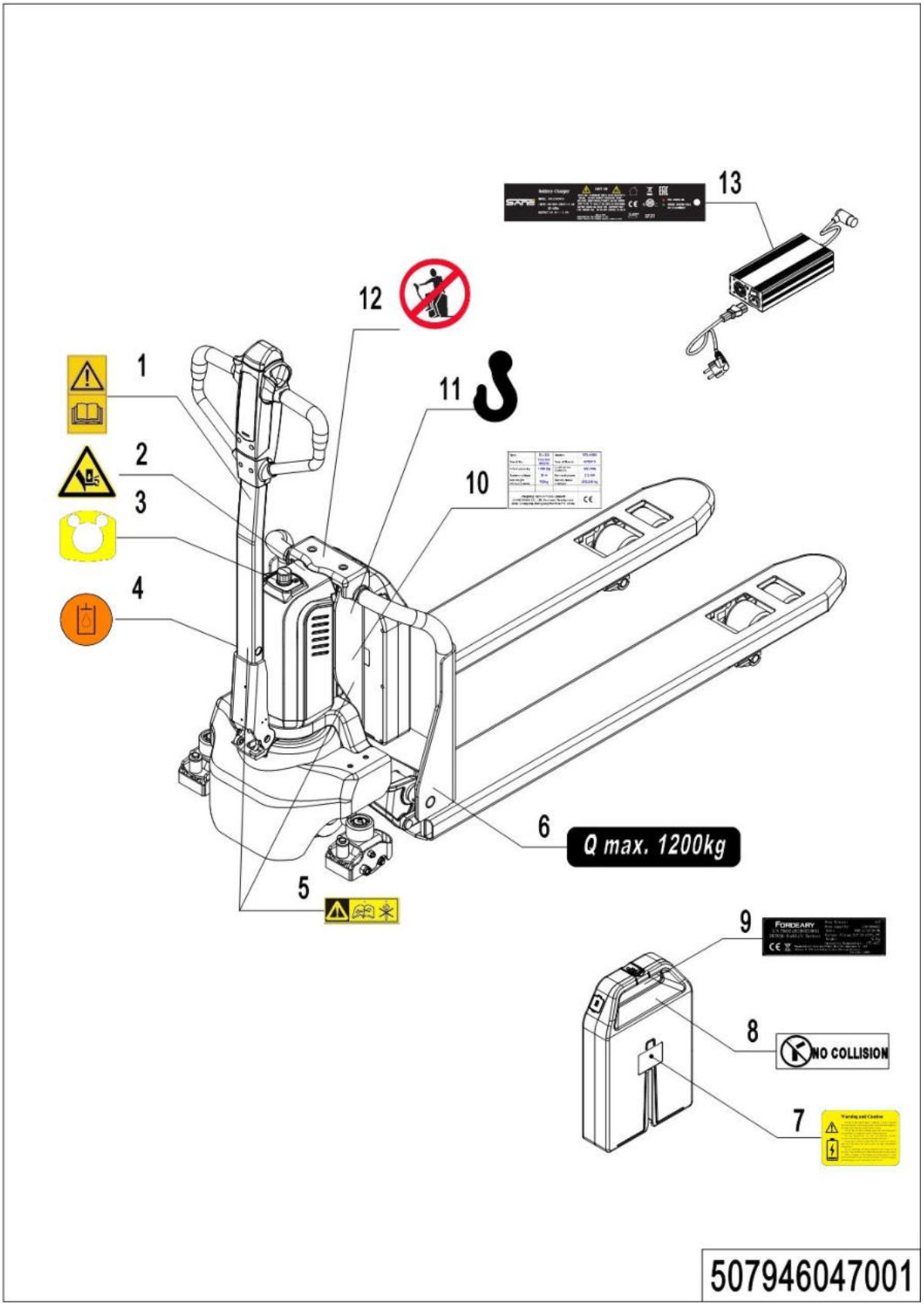

1= Supply as package. 2= Supply with constraints. 3= Phasing-out supply. 4= Supply as assembly. 5= Check other tables.

01 Labels and Decals-EU (507946047001)

No.	Item Code	Mark	Item Description	Qty.	Substitute	Note
1	941200300002		Label	1		
2	508047020007		Label	1		
3	508047020000		Label	1		
4	941200300003		Label	1		
5	508047020004		Label	2		
6	941200200019		Label	2		
7	508098520025		Label	1		
8	508047020002		Label	1		
9	508047020009		Label	1		
10	508047520002		Truck data plate	1		
11	941200300001		Label	2		
12	941200100003		Label	1		
13	508047520005		Label	1		

02 Labels and Decals-US (507946047002)

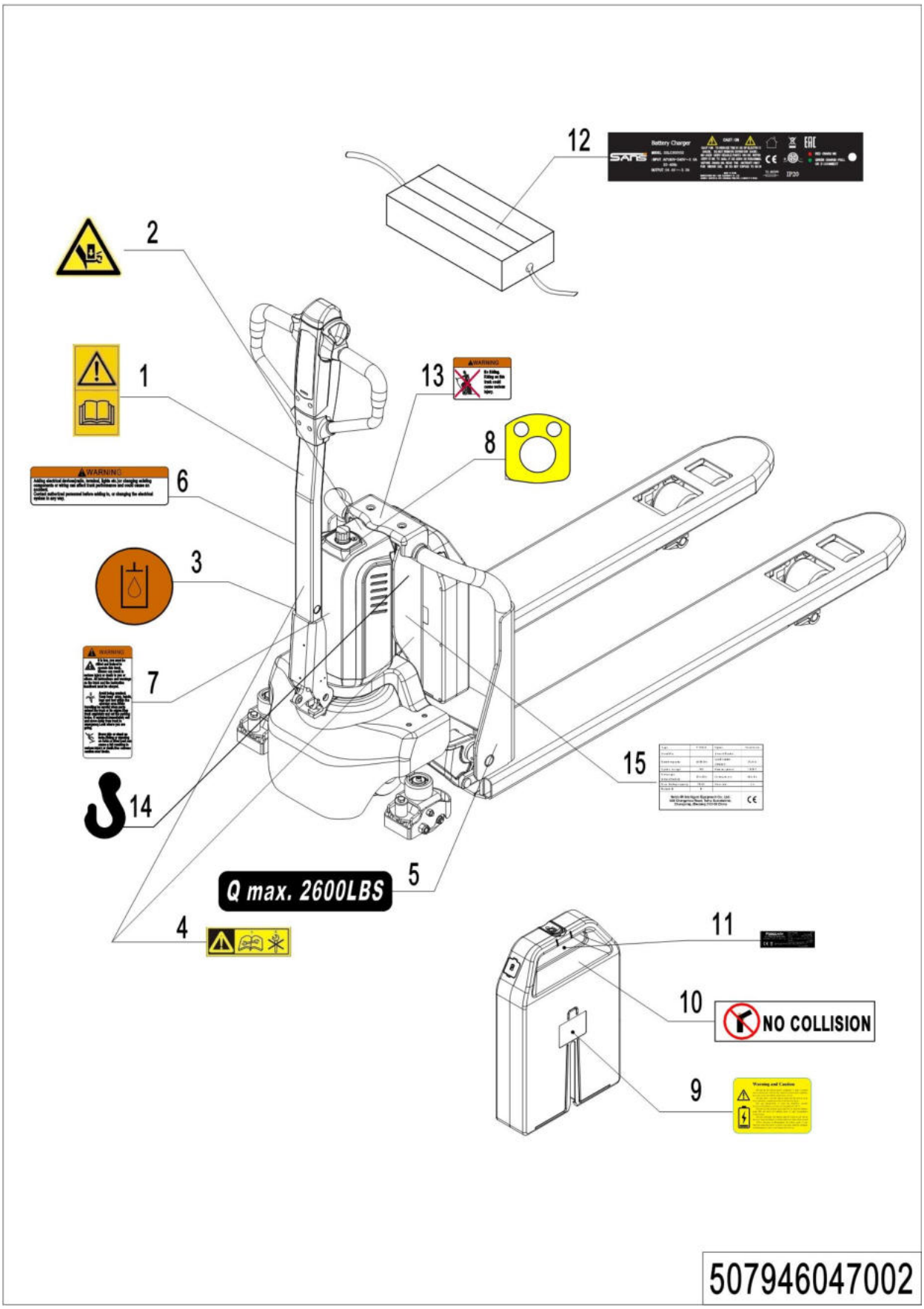

02 Labels and Decals-US(507946047002)

No.	Item Code	Mark	Item Description	Qty.	Substitute	Note
1	941200300002		Label	1		
2	508047020007		Label	1		
3	941200300003		Label	1		
4	941200200034		Label	2		
5	941200200035		Label	2		
6	941200100010		Label	1		
7	941200100009		Label	1		
8	508047020000		Label	1		
9	508098520025		Label	1		
10	508047020002		Label	1		
11	508047020009		Label	1		
12	508047520005		Label	1		
13	941200100011		Label	1		
14	941200300001		Label	2		
15	508047520002		Truck data plate	1		

1= Supply as package. 2= Supply with constraints. 3= Phasing-out supply. 4= Supply as assembly. 5= Check other tables.

Appendix

01 Electrical Circuit Diagram(508046045501)

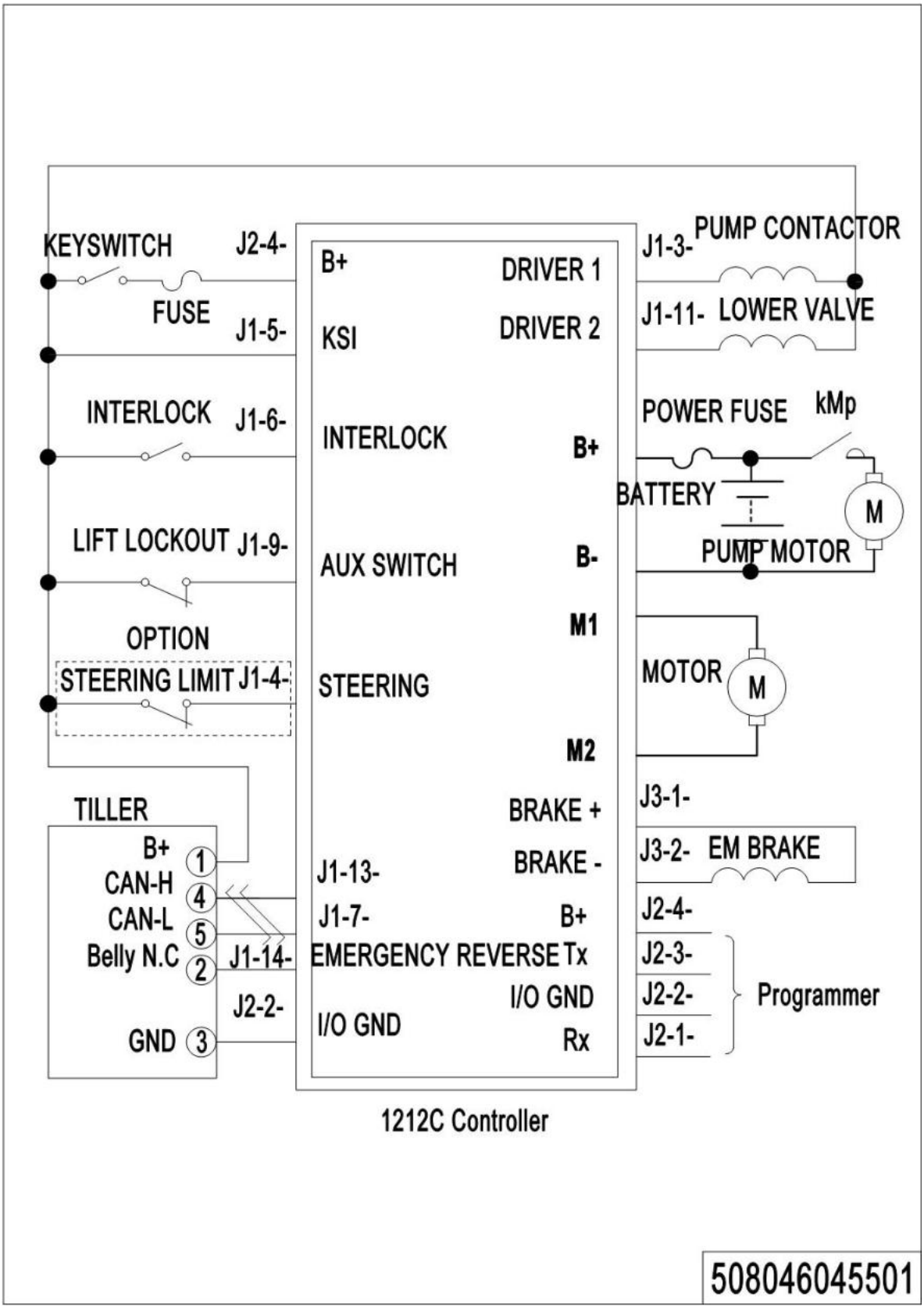

02 Electrical Circuit Diagram(EN1175-2020) (508046045504)

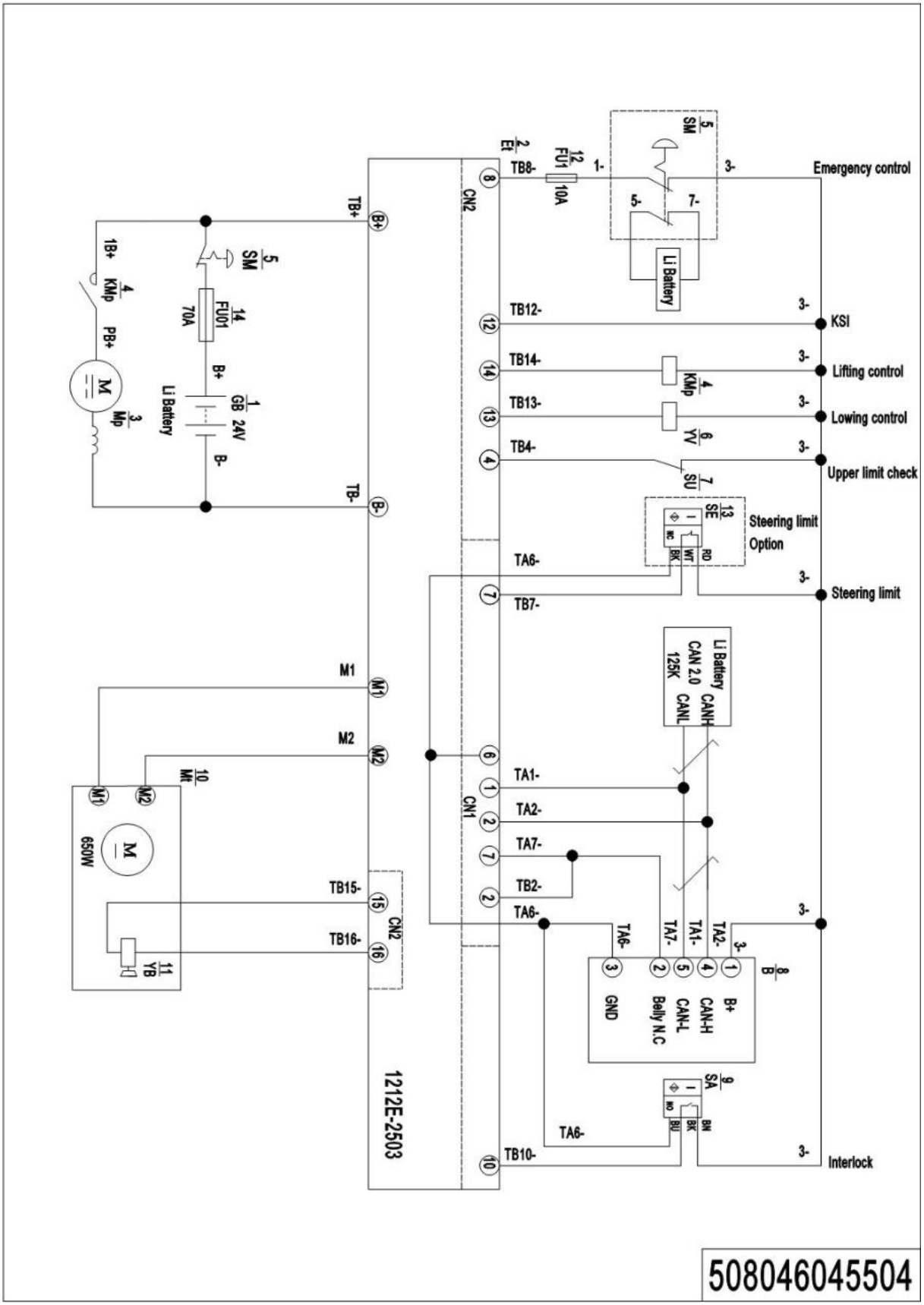

03 Hydraulic Circuit Diagram(508046045502)

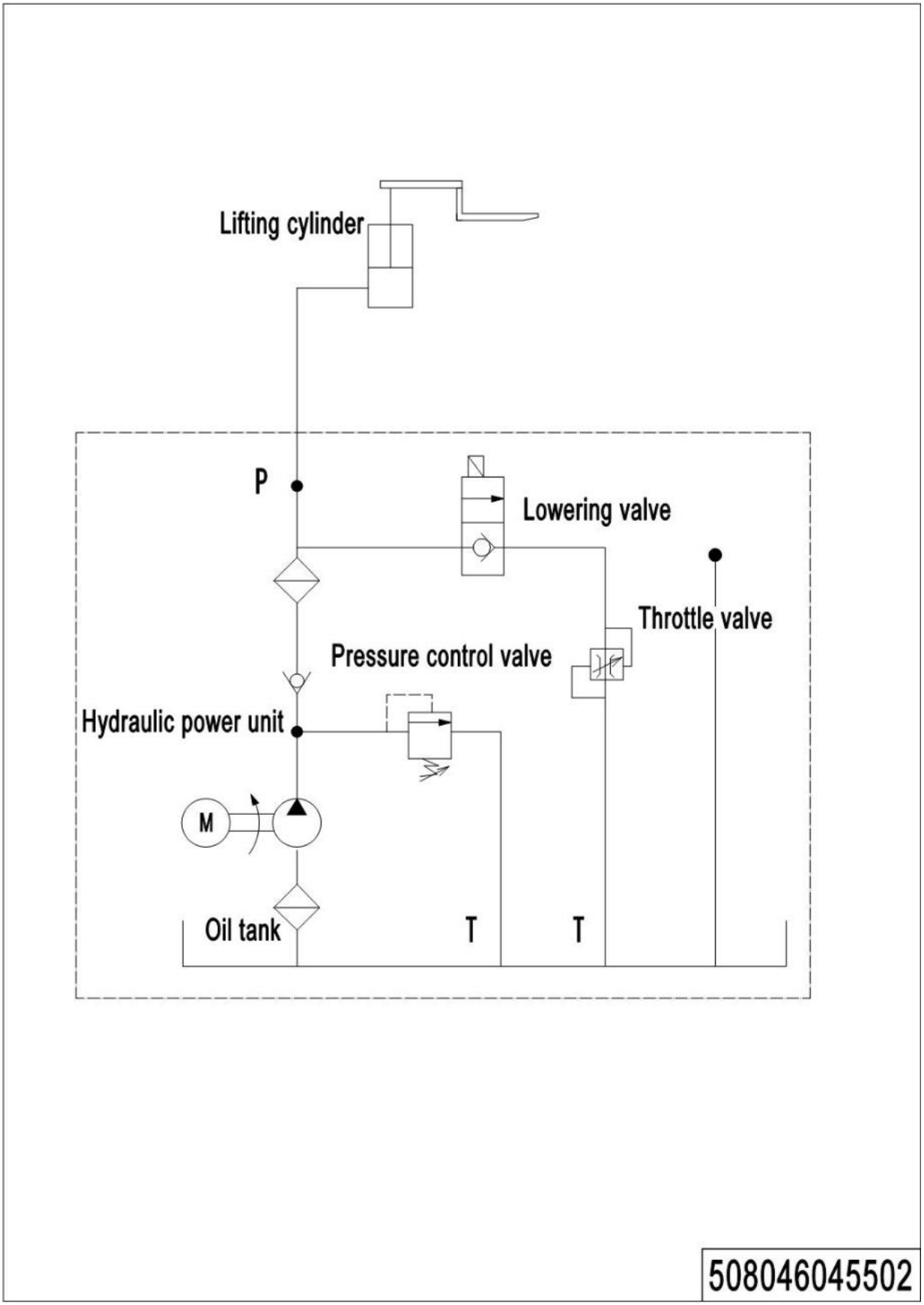

04 Consumable Parts List(507946045501)

No.	Item Code	Item Description	Qty.	Chapter/ Section/ Number
1	910700200058	Bearing	1	Chapter 1/01/5
2	910700600044	Bearing	1	Chapter 1/01/7
3	910700200004	Bearing	1	Chapter 1/02/4
4	508098520000	Carbon Brush	4	Chapter 1/02/6.01
5	910700200016	Bearing	1	Chapter 1/02/6.03
6	508098520003	Wheel	1	Chapter 1/02/8
7	508098520026	Wheel	1	Chapter 1/02/8
8	507798520023	Carbon Brush	4	Chapter 1/03/1.04
9	961004000009	Wheel	1	Chapter 1/03/2
10	961004200001	Wheel	1	Chapter 1/03/2
11	508098520008	Brush	1	Chapter 2/01/4.02 Chapter 2/02/4.02
12	508098510018	Seal Kit	1	Chapter 2/01/10.01 Chapter 2/02/10.01
13	508598510004	Seal Kit	1	Chapter 2/01/10.03 Chapter 2/02/10.03
14	940500100097	Bushing	2	Chapter 3/01/6.01 Chapter 3/02/7.01
15	911200100002	Oil Cup	2	Chapter 3/01/6.02 Chapter 3/02/7.02
16	940500100083	Bushing	8	Chapter 3/01/6.05 Chapter 3/02/7.05
17	911200100001	Oil Cup	2	Chapter 3/01/9.06
18	508033010001	Wire Harness	1	Chapter 4/01/4
19	940500200001	Bushing	2	Chapter 4/01/6
20	920200400027	Proximity Switch	1	Chapter 4/01/9
21	508011010001	Gas Spring	1	Chapter 4/01/10.3
22	505638520039	Running Pulley	2	Chapter 4/03/1.02
23	508098510049	Wheel	2	Chapter 4/03/2
24	940500200038	Bushing	4	Chapter 4/03/2.01
25	940500200005	Bushing	4	Chapter 4/03/2.01
26	910700200019	Bearing	8/4	Chapter 4/03/2.04
27	910700200018	Bearing	4	Chapter 4/03/2.04
28	940300300005	WheelΦ80x70	4	Chapter 4/03/2.05
29	940300300031	WheelΦ60x70	4	Chapter 4/03/2.05
30	940500100088	Bushing	4	Chapter 4/03/2.09
31	508098510050	Wheel	2	Chapter 4/03/3

1= Supply as package. 2= Supply with constraints. 3= Phasing-out supply. 4= Supply as assembly. 5= Check other tables.

No.	Item Code	Item Description	Qty.	Chapter/ Section/ Number
32	940300300023	WheelΦ80x93	2	Chapter 4/03/3.01
33	910700200018	Bearing	2	Chapter 4/04/6.1
34	940300300017	WheelΦ80x30	1	Chapter 4/04/6.2
35	508098510047	Spring Components	2	Chapter 4/04/7
36	508033010010	Wire Harness	1	Chapter 5/01/1
37	508033010003	Wire Harness	1	Chapter 5/01/2
38	508033010001	Wire Harness	1	Chapter 5/01/3
39	508033010005	Wire Harness	1	Chapter 5/01/4
40	508033010004	Wire Harness	1	Chapter 5/01/5
41	508033010006	Wire Harness	1	Chapter 5/01/6
42	508033010018	Wire Harness	1	Chapter 5/01/6
43	508033010007	Wire Harness	1	Chapter 5/01/7
44	508033010000	Wire Harness	1	Chapter 5/01/8
45	508033010009	Wire Harness	1	Chapter 5/01/8
46	920200100015	Emergency Button	1	Chapter 5/02/1
47	920200300012	Microswitch	1	Chapter 5/02/7
48	920200100027	Emergency Button	1	Chapter 5/03/2
49	920200300022	Microswitch	1	Chapter 5/03/7
50	920100200006	Fuse	1	Chapter 5/06/1.05

1= Supply as package. 2= Supply with constraints. 3= Phasing-out supply. 4= Supply as assembly. 5= Check other tables.