Print Number:　　Print Date:

NOBLELIFT

Scan QR Code for More

Service Hotline: 836115

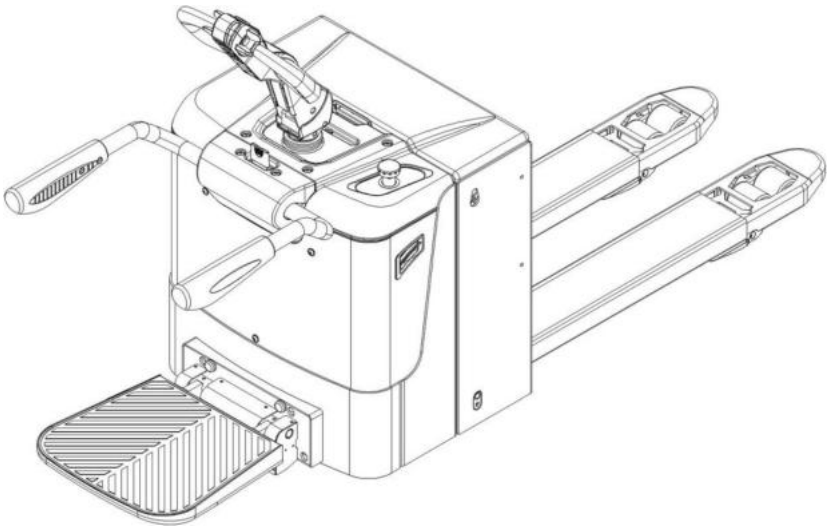

Electric Pallet Truck PTB20-C

PARTS MANUAL

505646020104

Version: V03

Truck Identification Number From:

Parts Manual

PTB20-C-PM03EN

Please order spare parts from authorized dealers of Noblelift Intelligent Equipment Co., LTD.

In order to avoid wrong delivery, all the orders for spare parts should specify the following items:

- Truck model, identification number and manufacture year.
- Orders for spare parts of mast, hydraulic transmission unit, steering axle, motor, etc. shall indicate the manufacture number of these parts.
- Codes for Noblelift spare parts are shown in the table of parts manual. Please also pay attention to the description of supply status, order quantity, etc. (check the number listed in "Mark" column of the parts manual).

"Mark" Column:

The unmarked indicates the parts are in short supply cycle.

Number 1: supply as package. Indicating these that parts are small parts and seal parts, which are supplied in package unit and in short supply cycle.

Number 2: supply with constraints. Indicating that these spare parts are not in stock and will be prepared for production after receiving the order from customers, which are in long supply cycle.

Number 3: phasing-out supply. Indicating that these parts will be replaced by new parts due to technical improvements and the current stock will not be available when these parts run out. Please check the description of technical improvements notice.

Number 4: supply as assembly. Indicating that these parts are assembly parts defined by manufacture process, which cannot be supplied as a single part.

Number 5: check other tables.

This parts manual is the property of Noblelift and can be shared under the confidential agreement only, Noblelift has the right to claim for compensation of any unauthorized use. Copy without permission is not allowed. Figures in the manual are not limited by the original design. Noblelift Intelligent Equipment Co., LTD reserves the right to improve the products for continuous technology progress.

Table of Contents

Chapter 1: Drive System....5
01 Drive Unit-Manual Steering(505646013507)....5
02 Drive Assembly 1.3kw(505646013003)....7
03 Drive Unit-EPS(505646013504)....9
04 Drive Assembly 1.6kw(505646013008)....11
04 Drive Assembly 1.6kw (505646013008)Continuation....13
Chapter 2: Hydraulic System....15
01 Hydraulic Components(505646024002)....15
02 Hydraulic Unit (505646023501)....17
Chapter 3: Truck Frame....19
01 Truck Frame (505646021506)....19
01 Truck Frame (505646021506) Continuation....21
02 Truck Frame (505646021502)....23
Chapter 4:Chassis....25
01 Chassis-EU (505646038501)....25
01 Chassis-EU (505646038501) Continuation....27
Chapter 5: Steering System, Braking System, Wheels....29
01 Tiller Unit (533546011003)(Key Switch)....29
02 Tiller (505646011002)(Key Switch)....31
03 Tiller (505646011004)(Coded Lock)....33
04 Tiller (505646011005)(Coded Lock)....35
05 Load Wheel (Tandem) (505646017001)....37
06 Load Wheel (Single) (505646017002)....39
07 Caster (505646016501)....41
Chapter 6: Electrical Parts....43
01 Display Assembly (505646010001)(Key Switch)....43
02 Display Assembly (505646010002)(Key Switch)....45
03 Charger (505646036501)....47
04 Traction Battery (505646037002)....49
05 Controller(505646033002)....51
06 Controller (505646033004)....53
06 Controller (505646033004) continuation....55
Chapter 7: Special Parts....57
01 Load Backrest-EU (505646040501)....57
02 Guard Arm (505646017501)....59
03 Platform (505646018001)....61
03 Platform (505646018001) Continuation....63
Chapter 8: Others....65
01 Labels and Decals-EU (505646047001)....65
02 Labels and Decals-US (505646047002)....67
Appendix....69
01 Hydraulic Circuit Diagram (505646045501)....69

02 Electrical Circuit Diagram, Key Switch (505646045506) 70
03 Electrical Circuit Diagram, Coded Lock (505646045507) 71
04 Electrical Circuit Diagram, Key Switch + Double switch (505646045508) 72
05 Electrical Circuit Diagram, Coded Lock + Double switch（505646045509） 73
06 Electrical Circuit Diagram, EPS+Key Switch（505646045510） 74
07 Electrical Circuit Diagram, EPS+ Coded Lock（505646045511） 75
08 Electrical Circuit Diagram, QT EPS+ Li（505646045512） 76
09 Electrical Circuit Diagram, QT EPS+Lead-acid（505646045513） 77
10 Electrical Circuit Diagram, QT+Li（505646045514） 78
11 Electrical Circuit Diagram, QT+Lead-acid（505646045515） 79
12 Electrical Circuit Diagram, QT+Key Switch+Li（505646045516） 80
13 Consumable Parts List 81

Chapter 1: Drive System

01 Drive Unit-Manual Steering(505646013507)

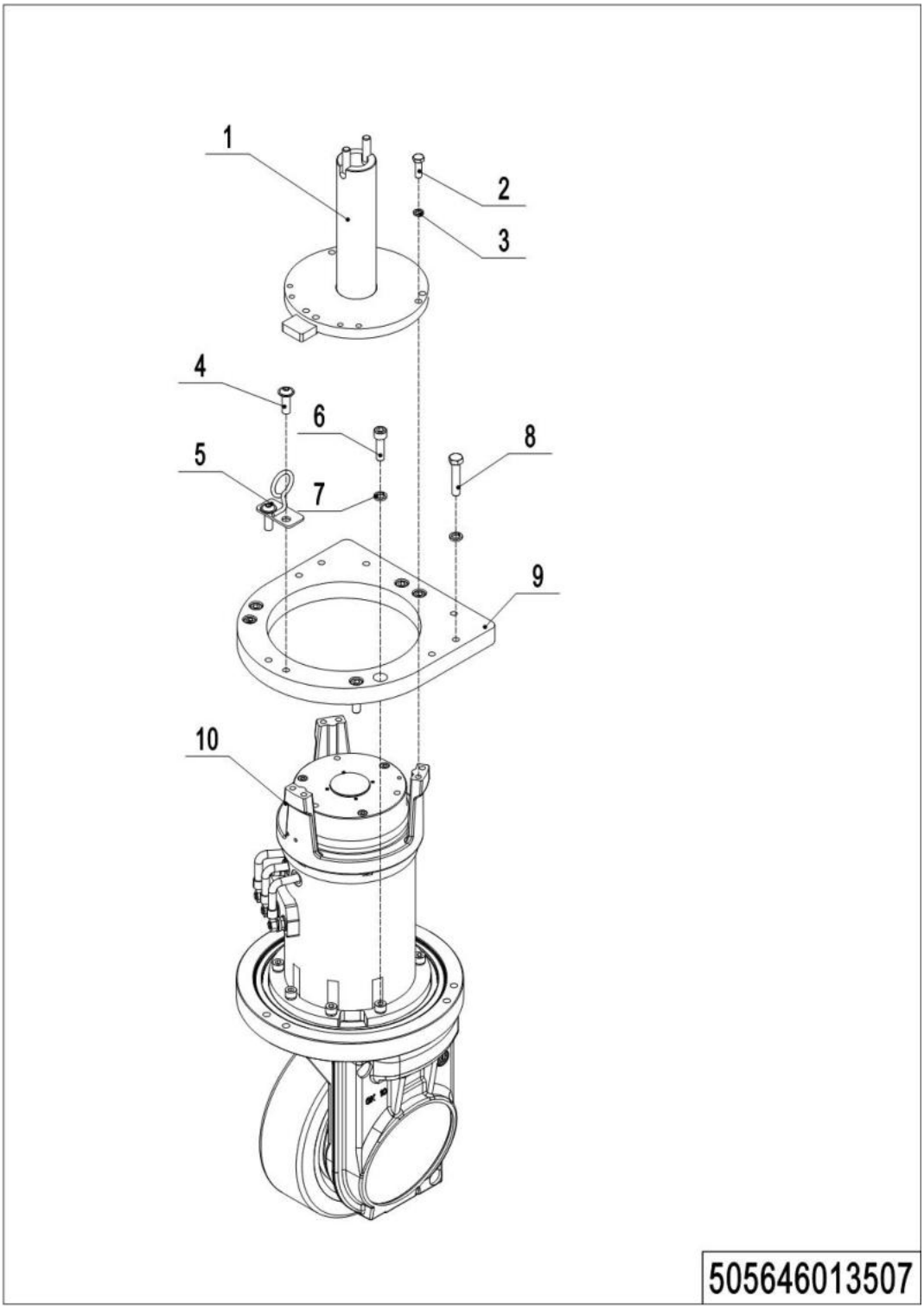

01 Drive Unit-Manual Steering (505646013507)

No.	Item Code	Mark	Item Description	Qty.	Substitute	Note
1	505631210000		handle Spindle	1		
2	910100300023	1	Bolt	6		
3	910400500006	1	Spring Washer	6		
4	941100100004	1	Screw	2		
5	505613510000		Fixing Mount	1		
6	910200200078	1	Screw	6		
7	910400500007	1	Spring Washer	12		
8	910100300041	1	Bolt	6		
9	505613520003		Mounting Plate	1		
10	961000400000	5	Drive Unit	1		505646013003

02 Drive Assembly 1.3kw(505646013003)

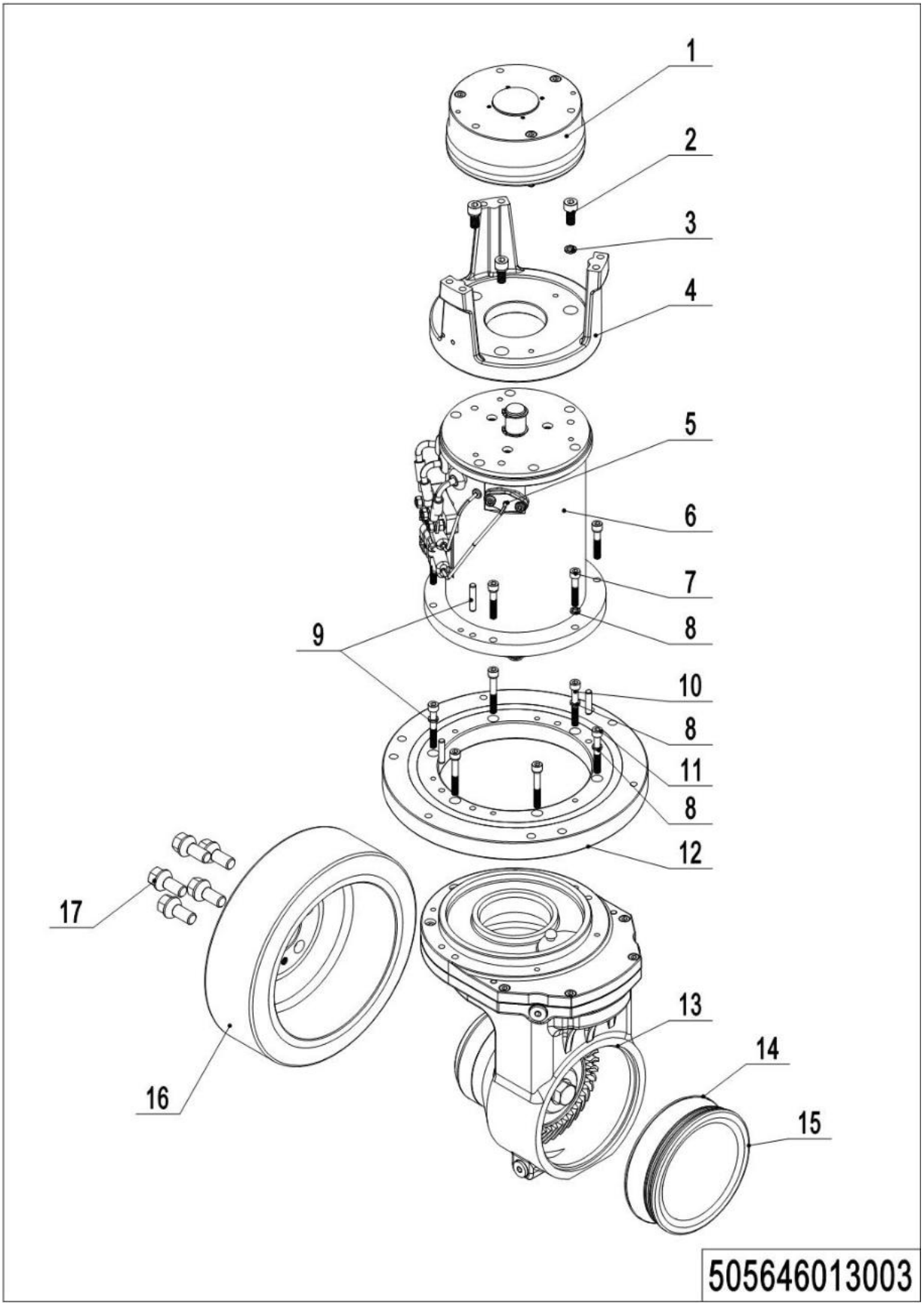

02 Drive Assembly 1.3kw(505646013003)

No.	Item Code	Mark	Item Description	Qty.	Substitute	Note
1	961000400001		Brake	1		
2	910200200149	1	Screw	3		
3	910400500019	1	Spring Washer	11		
4	961000400002		Holder	1		
5	961000400009		Encoder	1		
6	961000400003		Motor	1		
7	910200200143	1	Screw	6		
8	910400500018	1	Spring Washer	12		
9	910600100016		Cylindrical Pin	4		
10	910200200044	1	Screw	2		
11	910200200140	1	Screw	4		
12	961000400004		Slewing Bearing	1		
13	961000401000		Gearbox	1		
14	940998520018		Side Cap	1		
15	910800100095		O-Ring	2		
16	961000300001		Wheel Φ230x75	1		
17	940998520029		Screw	5		

03 Drive Unit-EPS(505646013504)

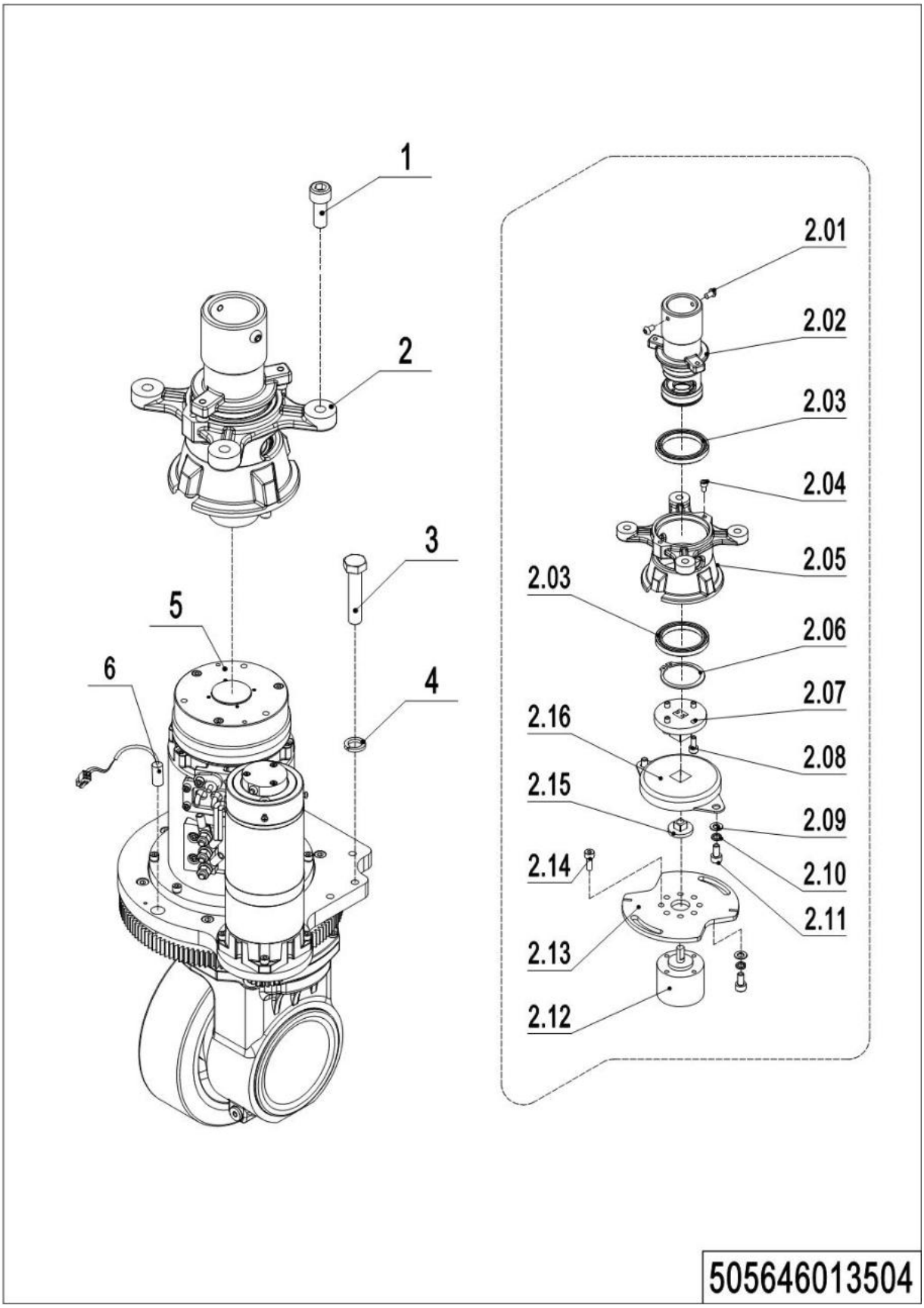

03 Drive Unit-EPS(505646013504)

No.	Item Code	Mark	Item Description	Qty.	Substitute	Note
1	910200200075	1	Screw	4		
2	505698510027		Electronic Steering Assembly	1		
2.01	910200300016	1	Screw	2		
2.02	505631520001	2	Bracket	1		
2.03	910700200041		Bearing	2		
2.04	910200200032	1	Screw	3		
2.05	505631520002		Fixing Base	1		
2.06	910401300024	1	Circlip	1		
2.07	505631520005		Link Block	1		
2.08	910200200014	1	Screw	4		
2.09	910400100004	1	Flat Washer	4		
2.10	910400500004	1	Spring Washer	4		
2.11	910200200022	1	Screw	4		Double switch
2.11	910200200023	1	Screw	4		Single switch
2.12	506733510000		Potentiometer	1		Double switch
2.12	505633010028		Potentiometer	1		Single switch
2.13	535931520002		Mounting Plate	1		Double switch
2.13	505731520001		Mounting Plate	1		Single switch
2.14	910200500022	1	Screw	4		
2.15	505931520002		Link Block	1		Double switch
2.15	505631520003		Link Block	1		Single switch
2.16	940801200001		Rotary Damper	1		
2.16	940801200005		Rotary Damper	1		Double switch
3	910100300041	1	Bolt	6		Single switch
4	910400500007	1	Spring Washer	6		
5	961000500000	2	Drive Unit	1		505646013008
6	921800100001		Sensor	1		

04 Drive Assembly 1.6kw(505646013008)

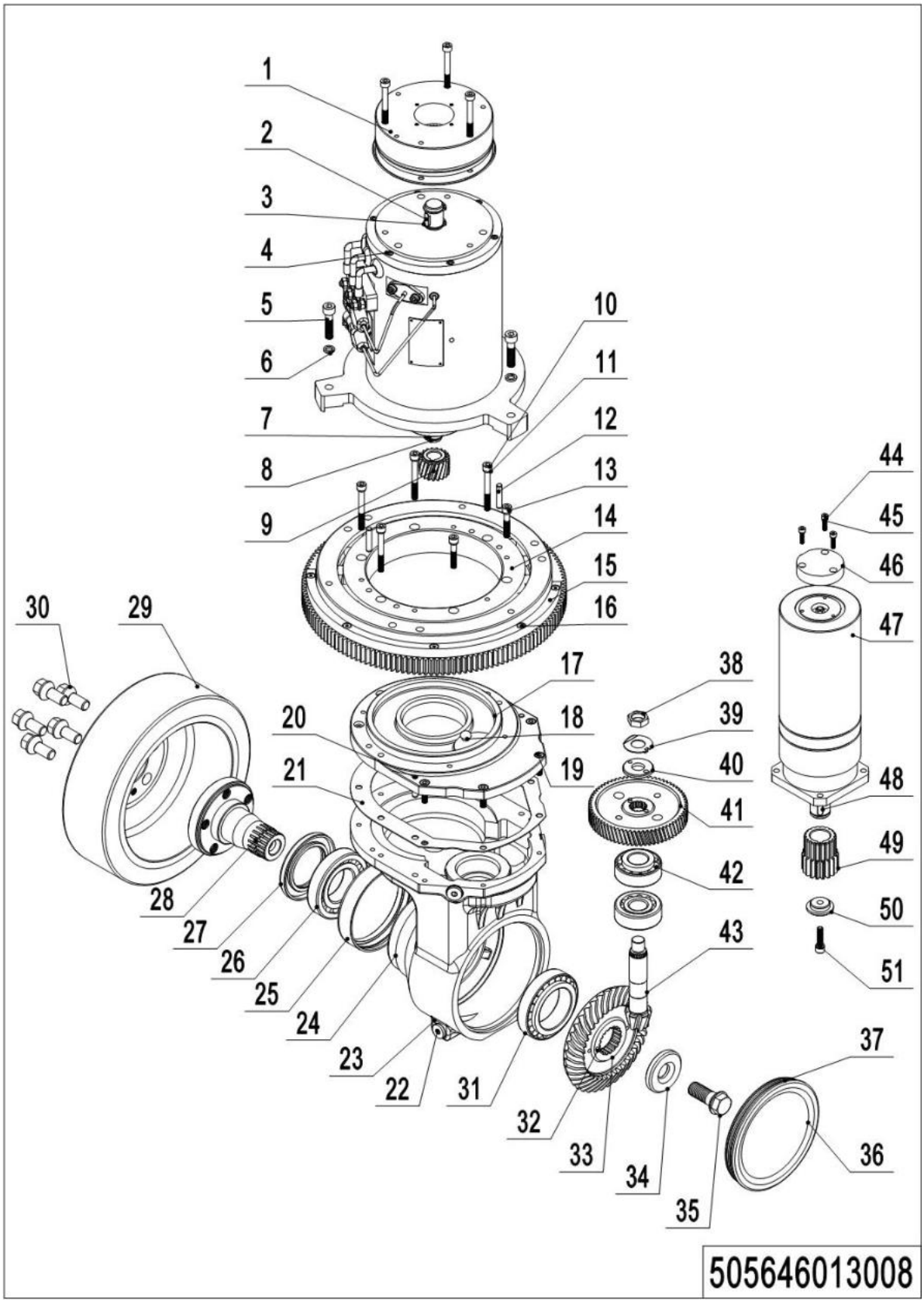

04 Drive Assembly 1.6kw(505646013008)

No.	Item Code	Mark	Item Description	Qty.	Substitute	Note
1	961000400001		Brake	1		
2	910600800012		Flat Key	1		
3	910401300011		Circlip	2		
4	961000500001		Motor	1		
5	910200200144		Screw	3		
6	910400500019		Spring Washer	3		
7	910600800007		Flat Key	1		
8	910401300007		Circlip	1		
9	961000400005		Gear	1		
10	910200200049		Screw M6x55(Black)	4		
11	910400500018		Spring Washer	14		
12	910600100016		Cylindrical Pin	2		
13	910200200141		Screw	2		
14	961000500002		Gear	1		
15	961000500004		Induction Block	1		
16	910200400041		Screw M4x16(Black)	5		
17	961000400007		Cover	1		
18	940998510011		Screw Plug	1		
19	910200200139		Screw	7		
20	910600100039		Cylindrical Pin	2		
21	940998520025		Pad	1		
22	940998520042		Screw Plug	3		
23	910800900007		Bonded Washer	3		
24	961000400008		Gearbox	1		
25	940998520030		Dust Cover	1		
26	910700600040		Bearing	1		
27	940998520040		Oil Seal	1		
28	940998520026		Drive Shaft	1		
29	961000300001		Wheel Φ230x75	1		

04 Drive Assembly 1.6kw (505646013008)Continuation

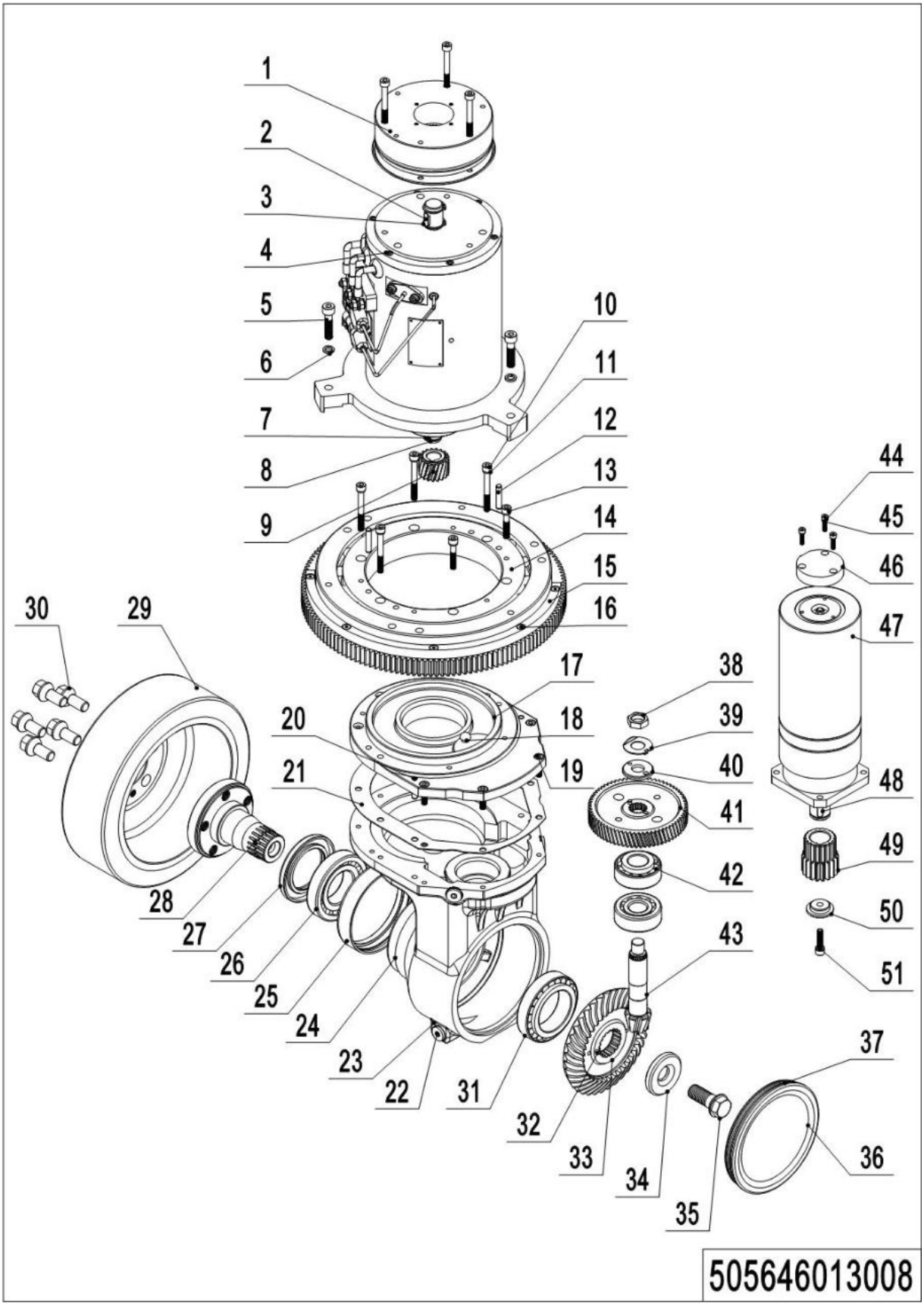

04 Drive Assembly1.6kw(505646013008)Continuation

No.	Item Code	Mark	Item Description	Qty.	Substitute	Note
30	940998520029		Screw	5		
31	910700600041		Bearing	1		
32	910600100038		Cylindrical Pin	2		
33	940998520017		Gear	1		
34	940998520027		Circlip	1		
35	940998520028		Lock Bolt	1		
36	940998520018		Side Cap	1		
37	910800100095		O-Ring	2		
38	910300400014		Nut	1		
39	910401000005		Lock Washer	1		
40	940998520036		Washer	1		
41	961000400006		Gear	1		
42	910700600042		Bearing	2		
43	940998520019		Gear	1		
44	910200200011		Screw	3		
45	910400500016		Spring Washer	3		
46	961000500007		Sensor	1		
47	961000500006		Steering Unit	1		
48	910600800015		Flat Key	1		
49	961000500003		Gear	1		
50	961000500005		Retaining Ring	1		
51	910200200140		Screw	1		

Chapter 2: Hydraulic System

01 Hydraulic Components(505646024002)

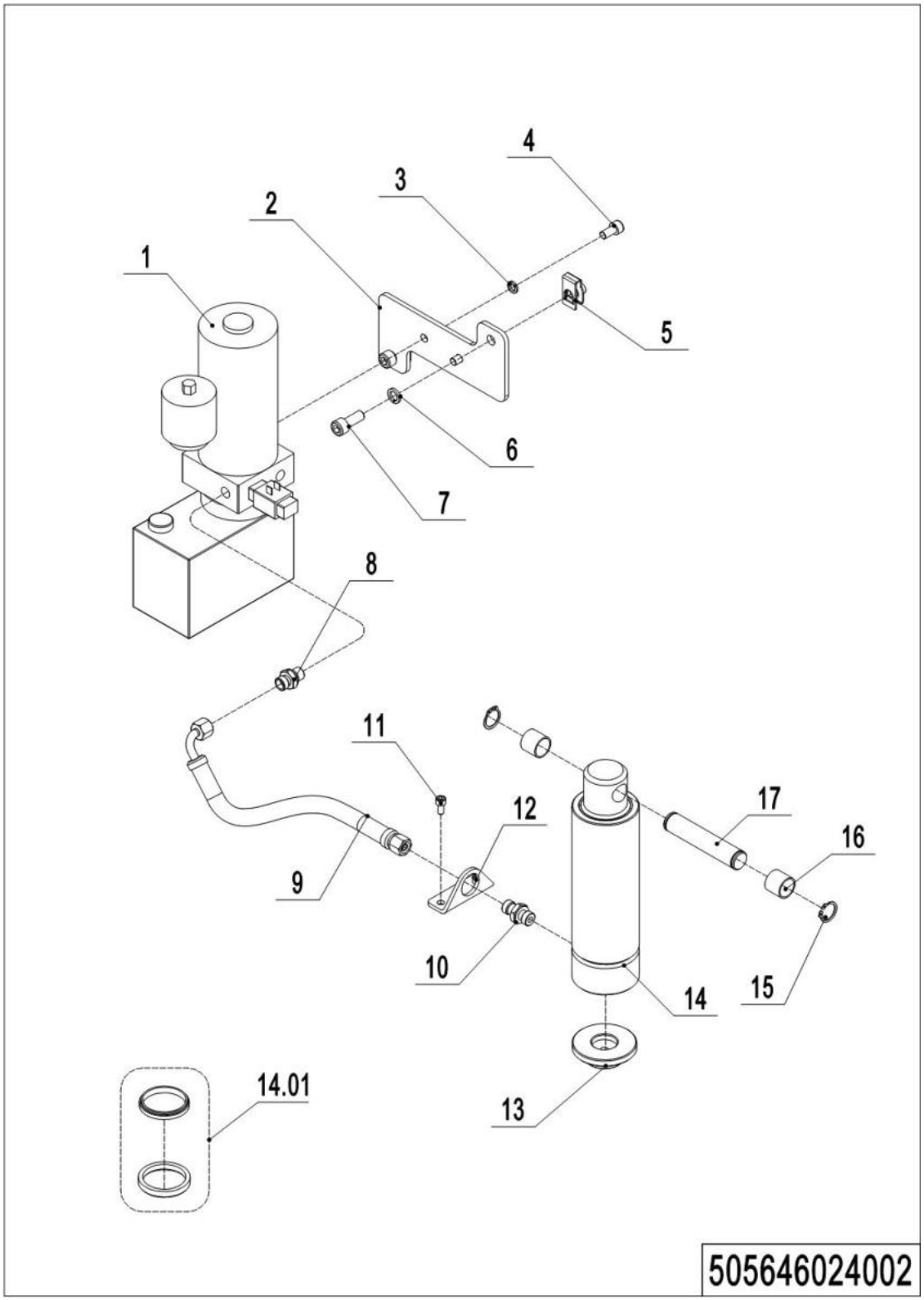

01 Hydraulic Components (505646024002)

No.	Item Code	Mark	Item Description	Qty.	Substitute	Note
1	950900100036	5	Pump Unit	1		505646023501
2	505621520031		Mounting Plate	1		
3	910400500006	1	Spring Washer	2		
4	910200200055		Screw	2		
5	940400400003		Cage Nut	2		
6	910400500007		Spring Washer	2		
7	910200200076		Screw	2		
8	950400300003	1	Joint	1		
9	505624020003		Hose	1		
10	950400400001	1	Joint	1		
11	910200200033		Screw	2		
12	505621520056		Locating Rack	1		
13	505621520035		Cylinder Base	1		
14	505624010000		Cylinder	1		
14.01	505698510005		Seal Kit	1		
15	910401300011		Circlip	2		
16	940500100019		Bushing	2		
17	505638520033		Pin	1		

02 Hydraulic Unit (505646023501)

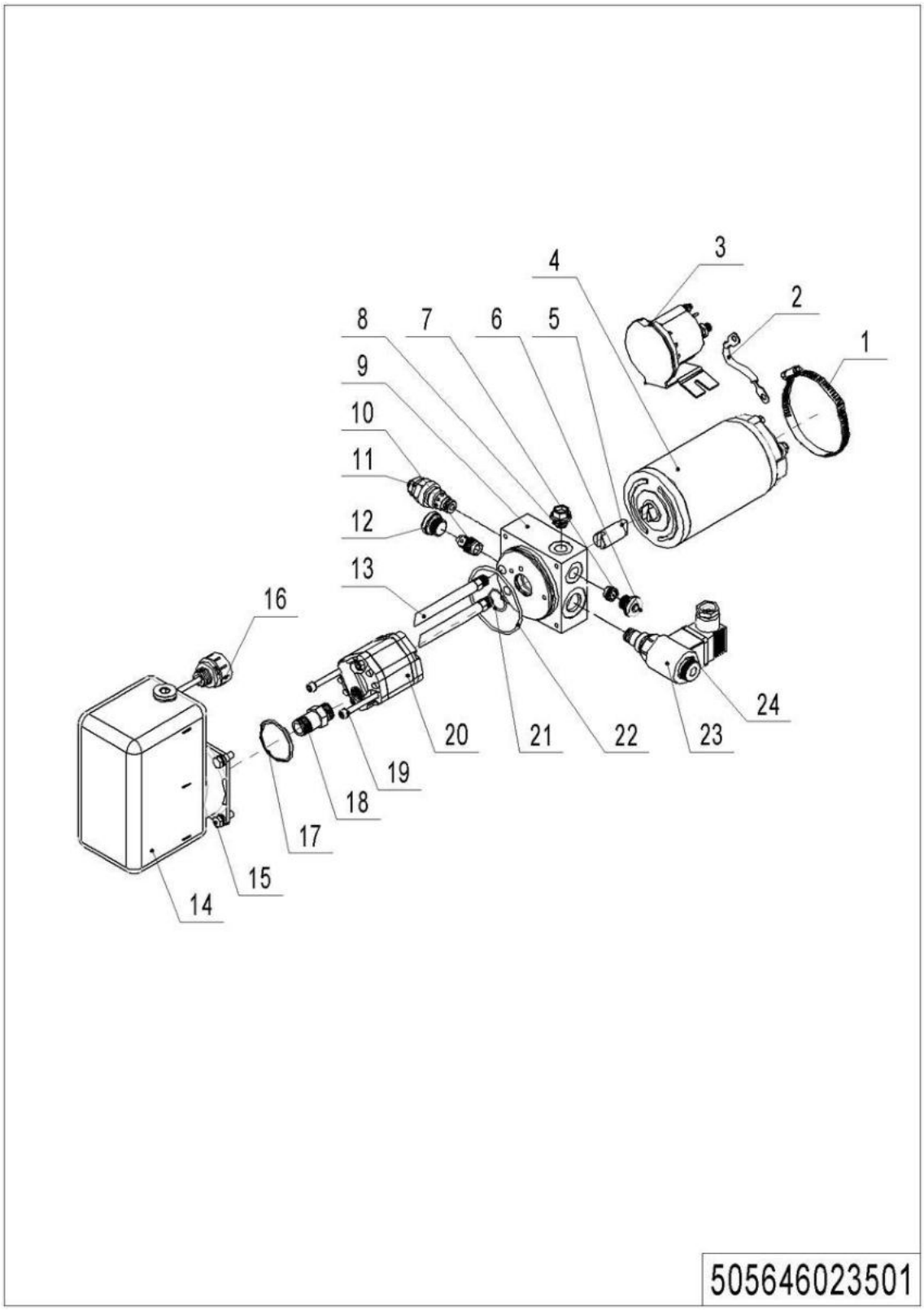

02 Hydraulic Unit (505646023501)

No.	Item Code	Mark	Item Description	Qty.	Substitute	Note
1	505698520032		Hoop	1		
2	508098520007		Cables	1		
3	505698520034		Switch	1		
4	505698520035		Motor	1		
5	505698520036		Coupling	1		
6	505698520037		End Cap	1		
7	505698520038		Check Valve	1		
8	505698520039		End Cap	1		
9	505698520040		Valve Plate	1		
10	505698520041		Valve	1		
11	505698520042		Overflow Valve	1		
12	505698520043		End Cap	1		
13	505698520044		Pipe	2		
14	505698520045		Tank	1		
15	505698520046		Bolt	4		
16	505698520047		Cap-Tank	1		
17	505698520048		Filter	1		
18	505698520049		Oil Tube	1		
19	505698520050		Screw	2		
20	505698520051		Gear Pump	1		
21	505698520052		O-Ring	1		
22	505698520053		O-Ring	1		
23	505698520054		Magnetic Valve	1		
24	505698520055		Coil	1		

Chapter 3: Truck Frame

01 Truck Frame (505646021506)

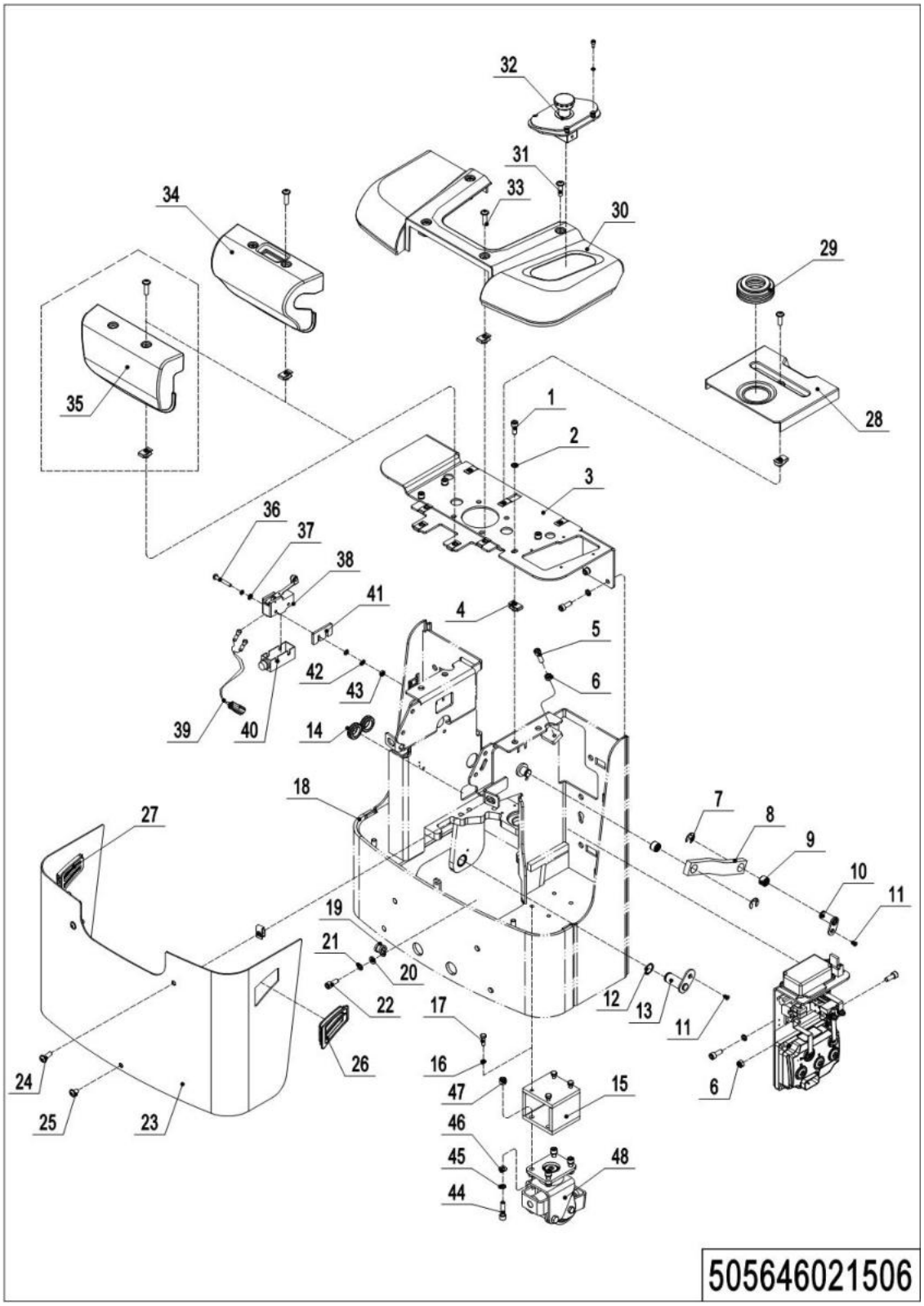

01 Truck Frame (505646021506)

No.	Item Code	Mark	Item Description	Qty.	Substitute	Note
1	910200200076	1	Screw	13		
2	910400500007		Spring Washer	25		
3	505621520029		Top Plate	1		
4	940400400003		Cage Nut	10		
5	910200200079	1	Screw	4		
6	910300100007	1	Nut	5		
7	910401700005	1	Circlip	2		
8	505621520020		Rod	2		
9	940500100017		Bushing	4		
10	505638510004		Pin	2		
11	910200400016	1	Screw	4		
12	910401300011	1	Circlip	2		
13	505621510002		Pin	2		
14	505621520036		Jacket	2		
15	505621520028		Wheel Mount	2		
16	910400500006	1	Spring Washer	8		
17	910100300023	1	Bolt	8		
18	505621510006		Chassis	1		
19	505621510005		Chassis	1		
19	951000100004		Hose Clamp	1		
20	910400100005	1	Flat Washer	1		
21	910400500005	1	Spring Washer	1		
22	910200200033	1	Screw	1		
23	505621510001		Apron	1		
24	941100100004	1	Screw	3		
25	941100100005	1	Screw	1		
26	505621510004		Vent Kit	1		
27	505621510003		Vent Kit	1		
28	505621520026		Protective Cover	1		
29	940600400001		Dust Cover	1		

01 Truck Frame (505646021506) Continuation

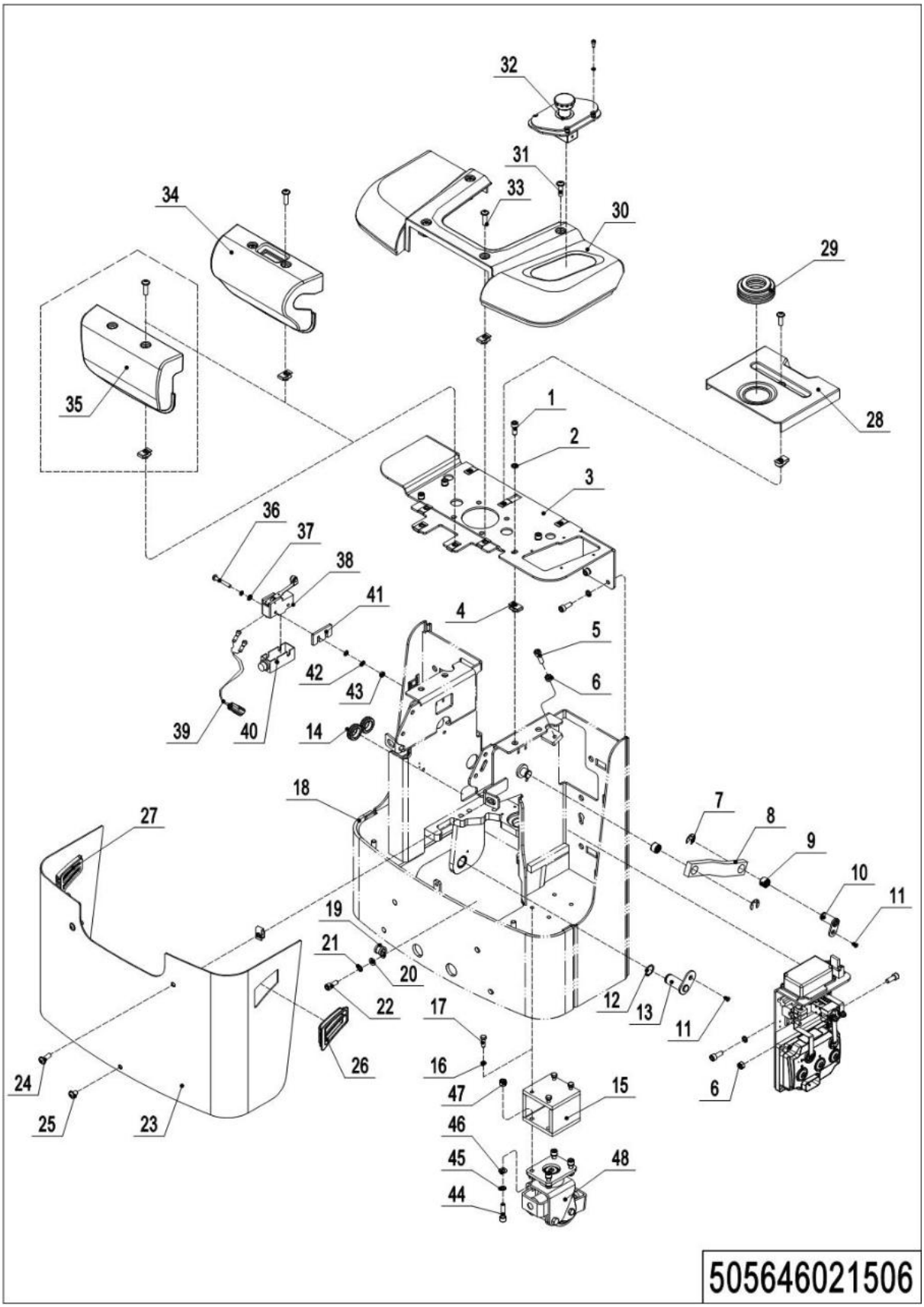

01 Truck Frame (505646021506) Continuation

No.	Item Code	Mark	Item Description	Qty.	Substitute	Note
30	505621520024		Protective Cover	1		
31	941100100002		Screw	2		
32	505610001000		Indicator Kit	1		Key Switch
32	505610001002		Indicator Kit	1		Coded Lock
33	941100100003		Screw	4		
34	505621520025		Protective Cover	1		
35	505621520043		Protective Cover	1		
36	910200500028	1	Screw	2		
37	910400100003	1	Flat Washer	4		
38	920200300003	2	Microswitch	1		
39	505633010001	2	Wire Harness	1		
40	920200300008	2	Protective Cover	1		
41	505621520030		Subplate	1		
42	910400500003	1	Spring Washer	4		
43	910300500001	1	Nut	2		
44	910200200079	1	Screw	8		
45	910400500007	1	Spring Washer	8		
46	910400100007	1	Flat Washer	8		
47	910300500005	1	Nut	8		
48	505616510000		Caster Assembly	2		505646016501

02 Truck Frame (505646021502)

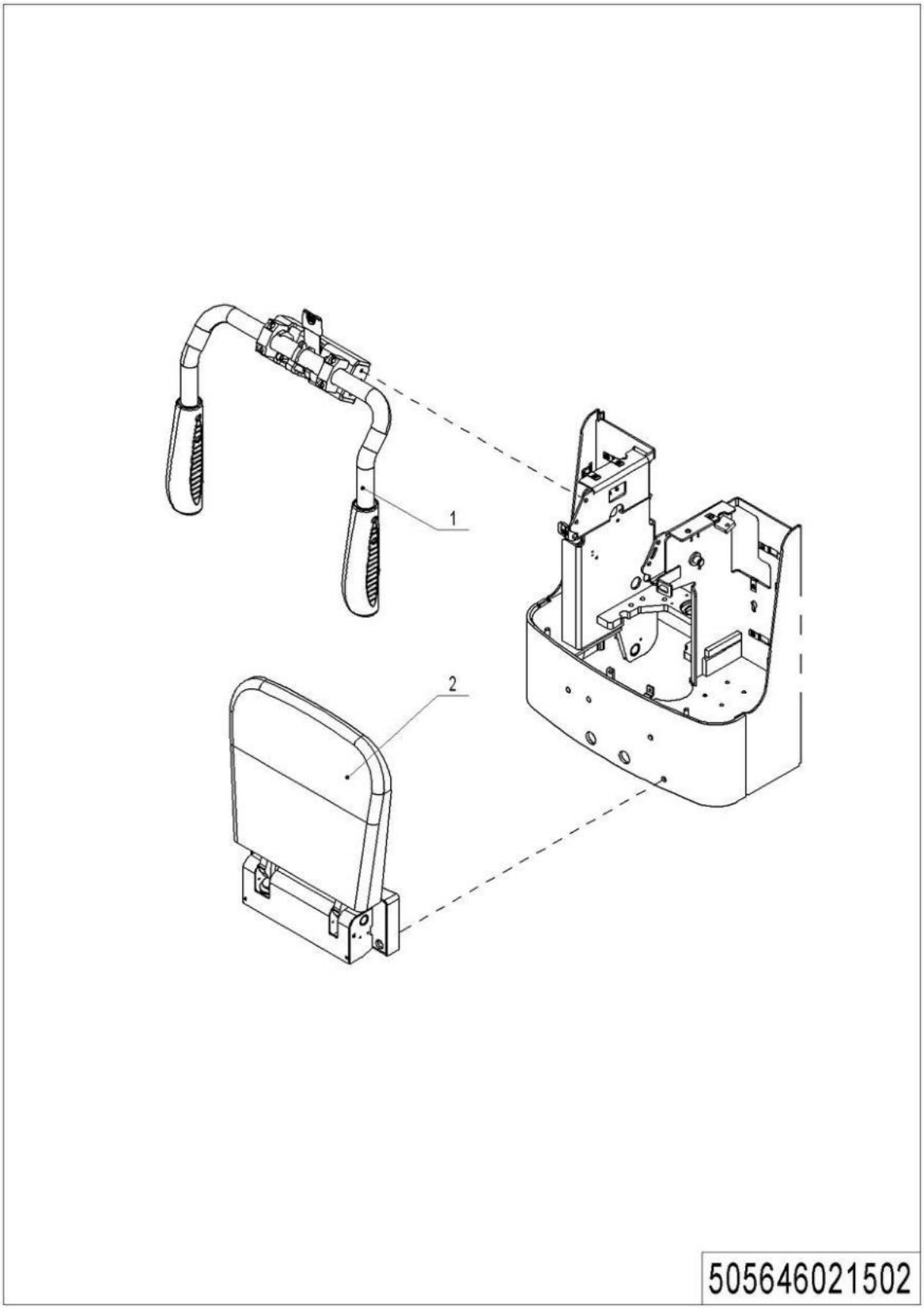

02 Truck Frame (505646021502)

No.	Item Code	Mark	Item Description	Qty.	Substitute	Note
1	505698510012	5	Protective Arm	1		505646017501
2	505698510013	5	Footboard Kit	1		505646018001

Chapter 4:Chassis

01 Chassis-EU (505646038501)

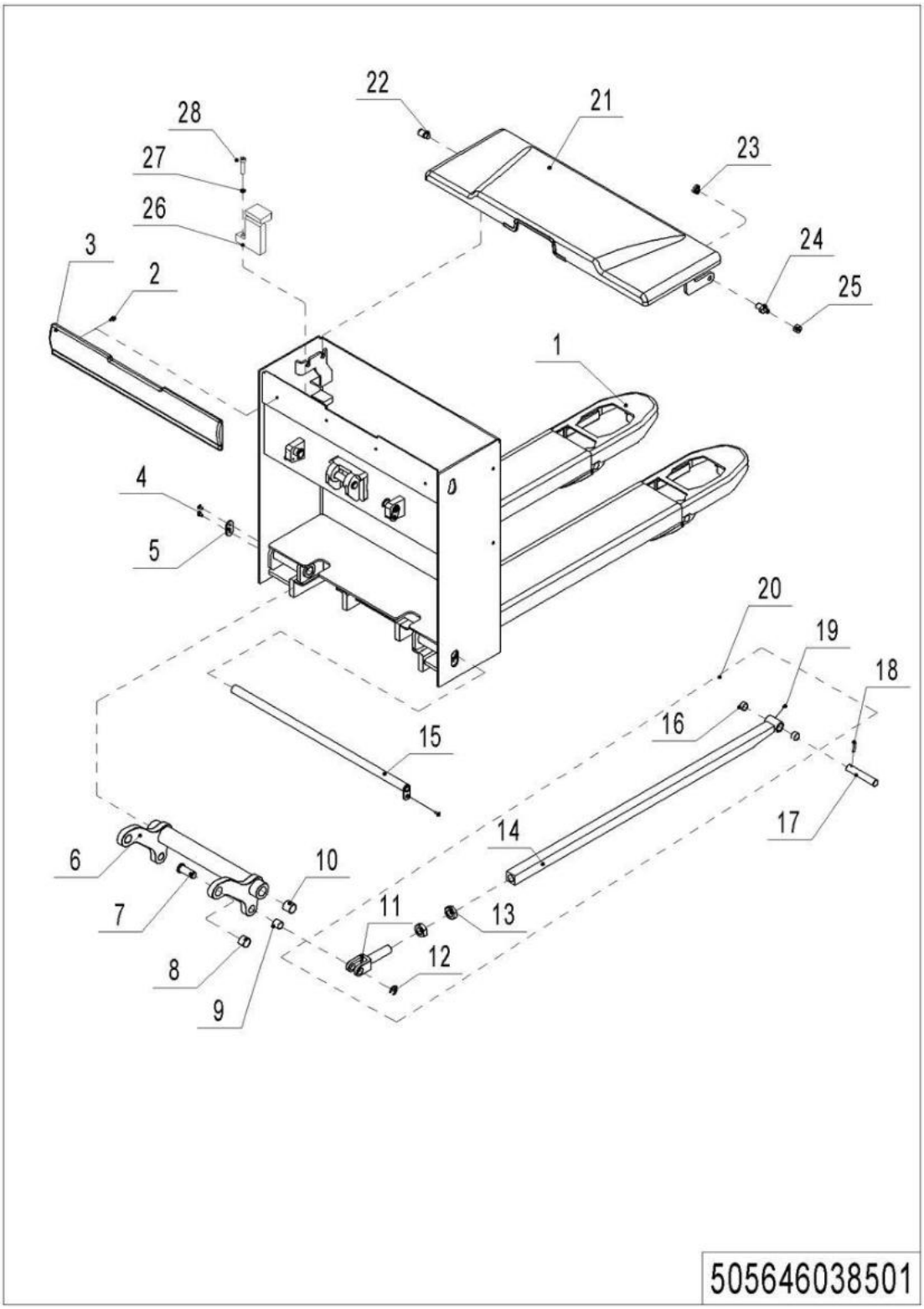

01 Chassis-EU (505646038501)

No.	Item Code	Mark	Item Description	Qty.	Substitute	Note
1	505638510000		Chassis(EU540x1150)	1		
1	505638510024		Chassis(EU540x1220)	1		
1	505638510021		Chassis(EU540x1500)	1		
1	505638510020		Chassis(EU540x1800)	1		
1	505638510019		Chassis(EU540x2000)	1		
1	505638510008		Chassis(EU685x1220)	1		
1	505638510006		Chassis(EU685x1150)	1		
1	505638510017		Chassis(EU685x1500)	1		
1	505638510015		Chassis(EU685x1800)	1		
1	505638510013		Chassis(EU685x2000)	1		
2	910200300017	1	Screw	4		
3	505638520028		Protective Cover	1		
4	910200400016	1	Screw	5		
5	505638520031		Fixing Plate	1		
6	505638510001		Rise Arm	1		
6	505638510007		Rise Arm	1		
7	505638520034		Pin	1		
8	940500100027		Bushing	2		
9	940500100019		Bushing	2		
10	940500100032		Bushing	2		
11	505638520035		Push Rod Fork	2		
12	910401700005	1	Circlip	2		
13	910300400010		Nut	4		
14	505638510002		Push Rod (1150, EU)	2		
14	505638510009		Push Rod (1220, EU)	2		
14	505638510018		Push Rod (1500, EU)	2		
14	505638510016		Push Rod (1800, EU)	2		
14	505638510014		Push Rod (2000, EU)	2		
15	505638510003		Pin	1		
16	940500100012		Bushing	4		

01 Chassis-EU (505646038501) Continuation

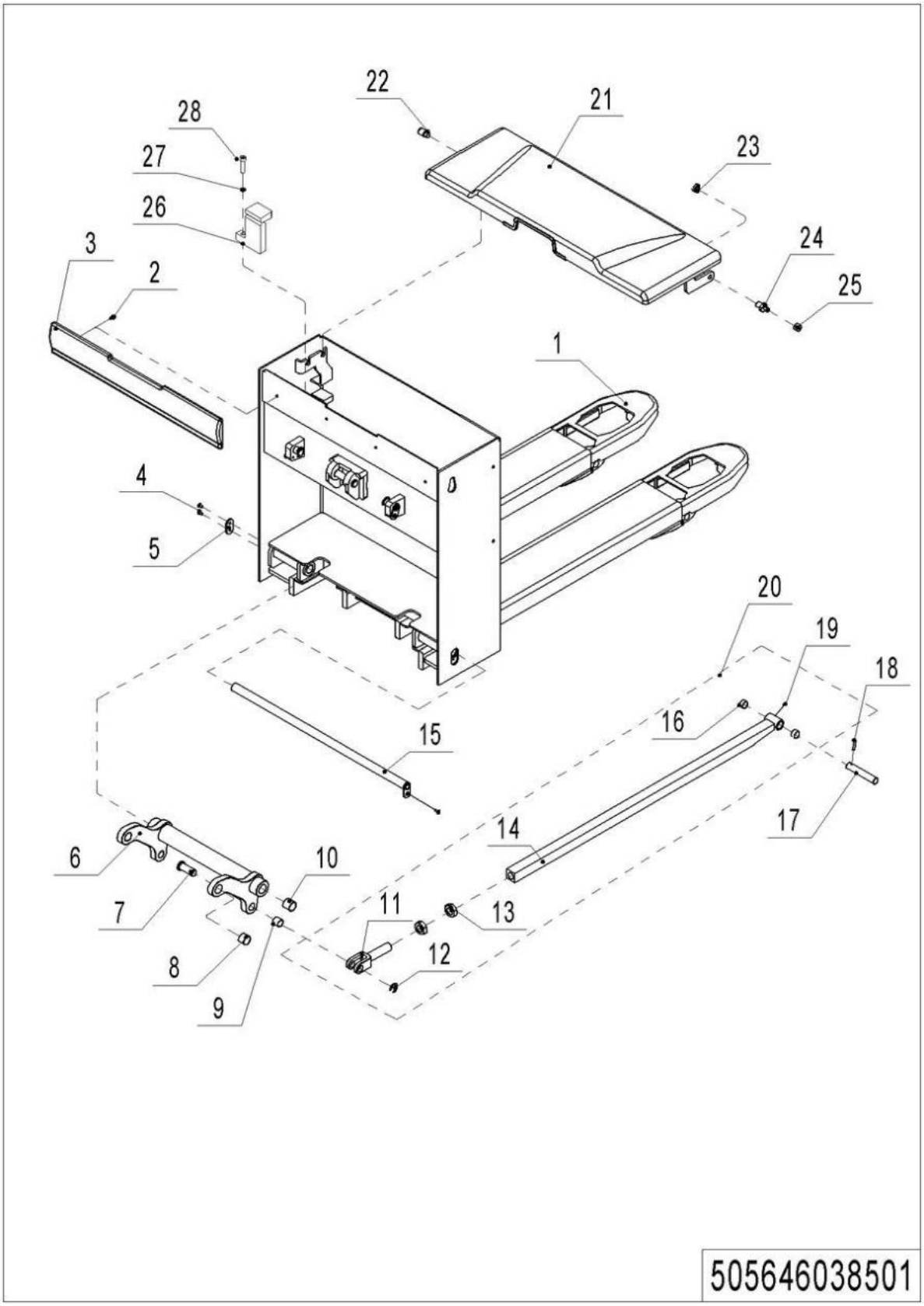

01 Chassis-EU (505646038501) Continuation

No.	Item Code	Mark	Item Description	Qty.	Substitute	Note
17	505638520037		Axle	2		
18	910600400027	1	Spring Pin	2		
19	911200100001		Oil Cup	2		
20	505698510006		Push Rod Kit	2		
20	505698510011		Push Rod Kit	2		
20	505698510015		Push Rod Kit(EU1500)	2		
20	505698510016		Push Rod Kit(EU1800)	2		
20	505698510017		Push Rod Kit(EU2000)	2		
21	505621010000		Cell Cover	1		
22	505621020003		Crash Pad	1		
23	910300300005	1	Nut	2		
24	505621020005		Axle	2		
25	505621020004		Crash Pad	2		
26	505638510005		Stop Plate	1		

Chapter 5: Steering System, Braking System, Wheels

01 Tiller Unit (533546011003)(Key Switch)

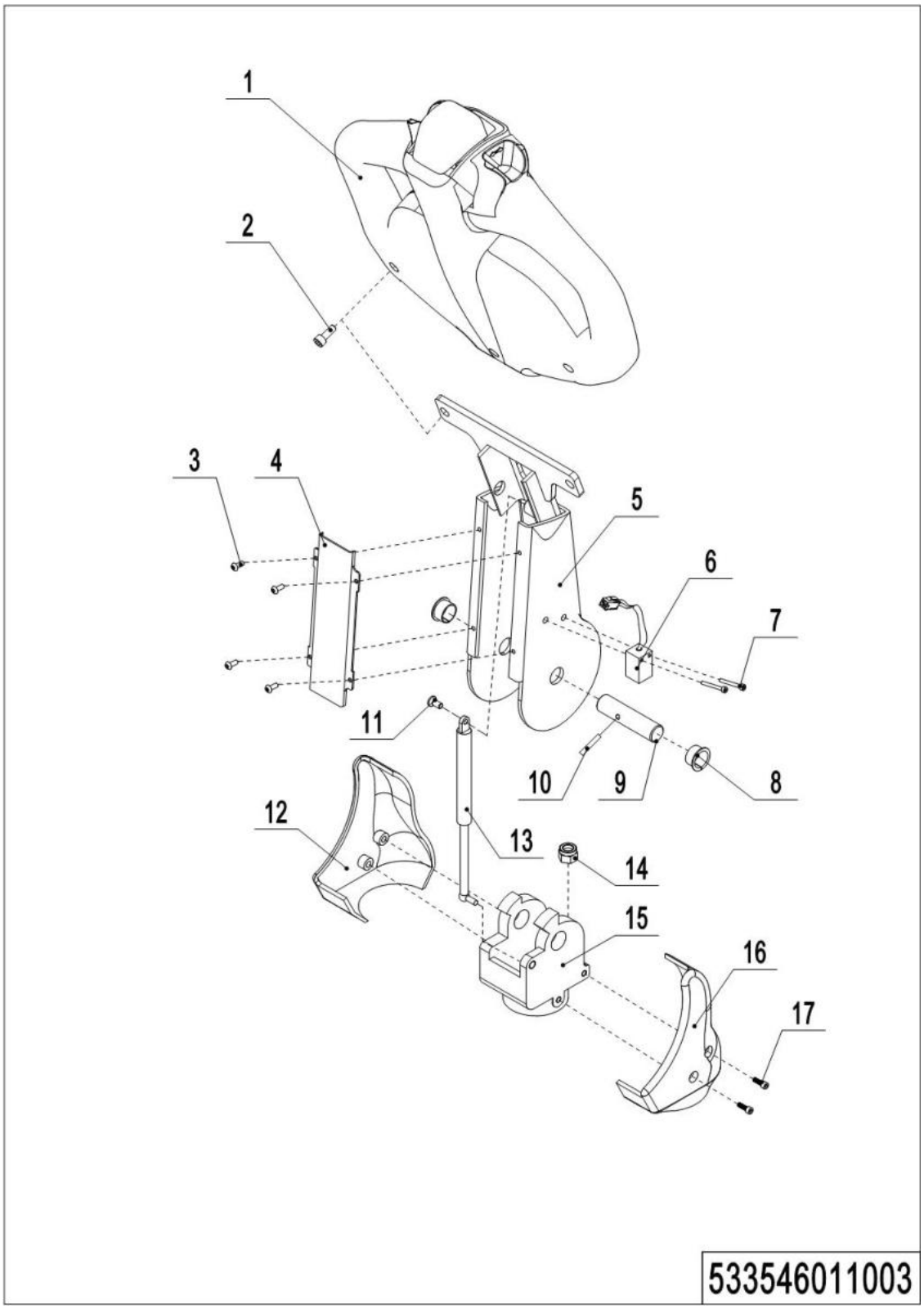

01 Tiller Unit (533546011003)(Key Switch)

No.	Item Code	Mark	Item Description	Qty.	Substitute	Note
1	922100100012		Tiller	1		
2	910200200058	1	Screw	2		
3	910200300005	1	Screw	4		
4	505611020013		Close Plate	1		
5	505611010000		Tiller	1		
6	505633510000	2	Proximity Switch	1		
7	910200500015	1	Screw	2		
8	940500200002		Bushing	2		
9	505611020008		Axle	1		
10	910600400013	1	Spring Pin	1		
11	910200200057	1	Screw	1		
12	505611020010		Protective Cover	1		
13	940400100002		Air Spring	1		
14	910300500005	1	Nut	2		
15	535911020009		Bracket	1		
16	505611020011		Protective Cover	1		
17	910200300016	1	Screw	4		

02 Tiller (505646011002)(Key Switch)

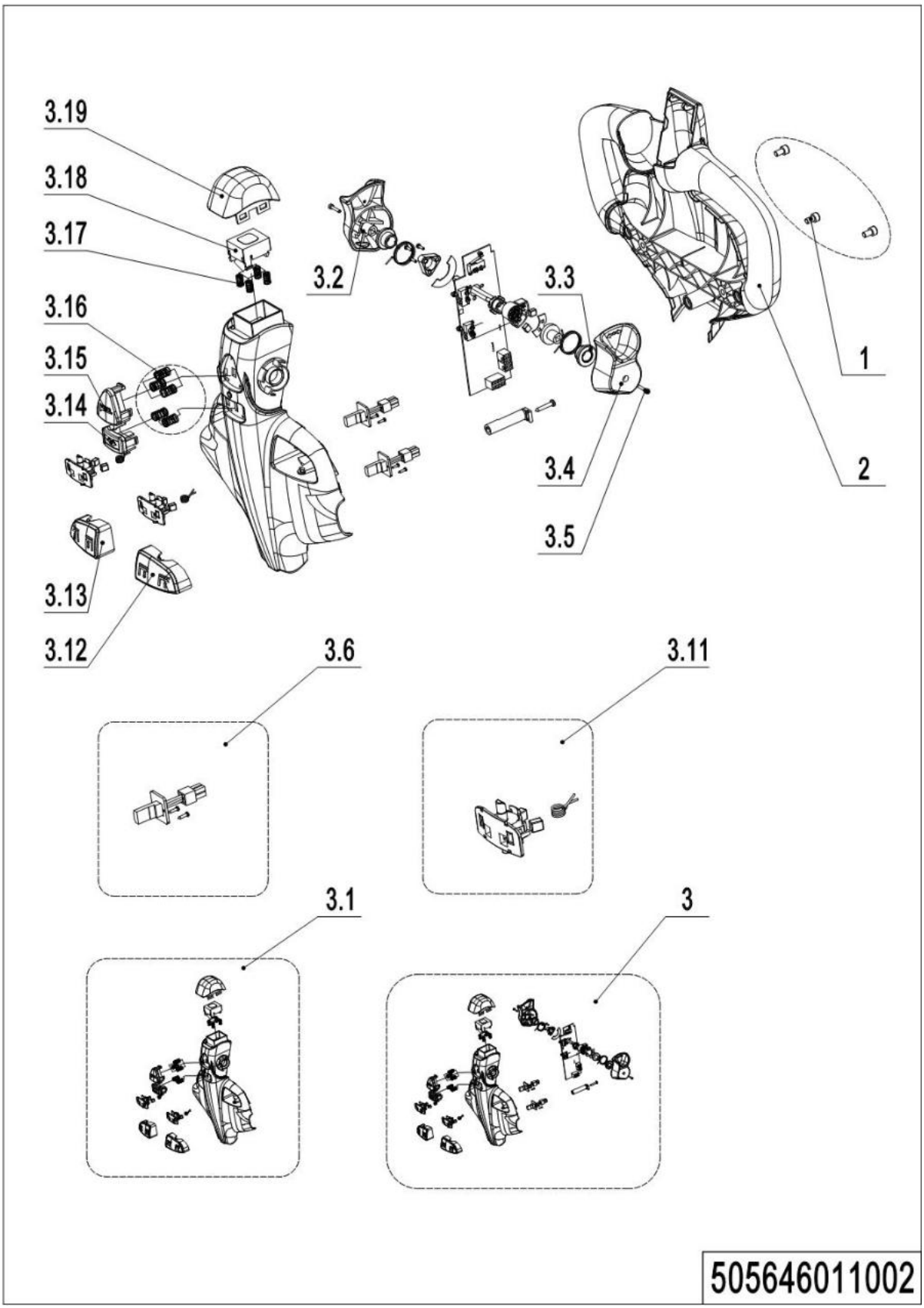

02 Tiller (505646011002)(Key Switch)

No.	Item Code	Mark	Item Description	Qty.	Substitute	Note
1	910200200032	1	Screw	3		M6×10
2	505698520124	2	Handle Cap	1		
3	505698510024	2	Handle Cap Kit	1		
3.1	505698510021	2	Handle Cap Kit	1		With PCB
3.11	505698510023	2	Sensor	1		
3.12	505698520113	2	Button	1		
3.13	505698520114	2	Button	1		
3.14	505698520115	2	Button	1		
3.15	505698520116	2	Button	1		
3.16	505698520117	2	Spring	5		
3.17	505698520118	2	Spring	4		
3.18	505698520119	2	Cover	1		
3.19	505698520120	2	Cover	1		
3.2	505698520121	2	Traction lever	1		
3.3	505698520122	2	Sleeve	2		
3.4	505698520123	2	Traction lever	1		
3.5	910200200004	1	Screw	2		M3×16
3.6	505698510022	2	Magnetic Steel Base Kit	1		

03 Tiller (505646011004)(Coded Lock)

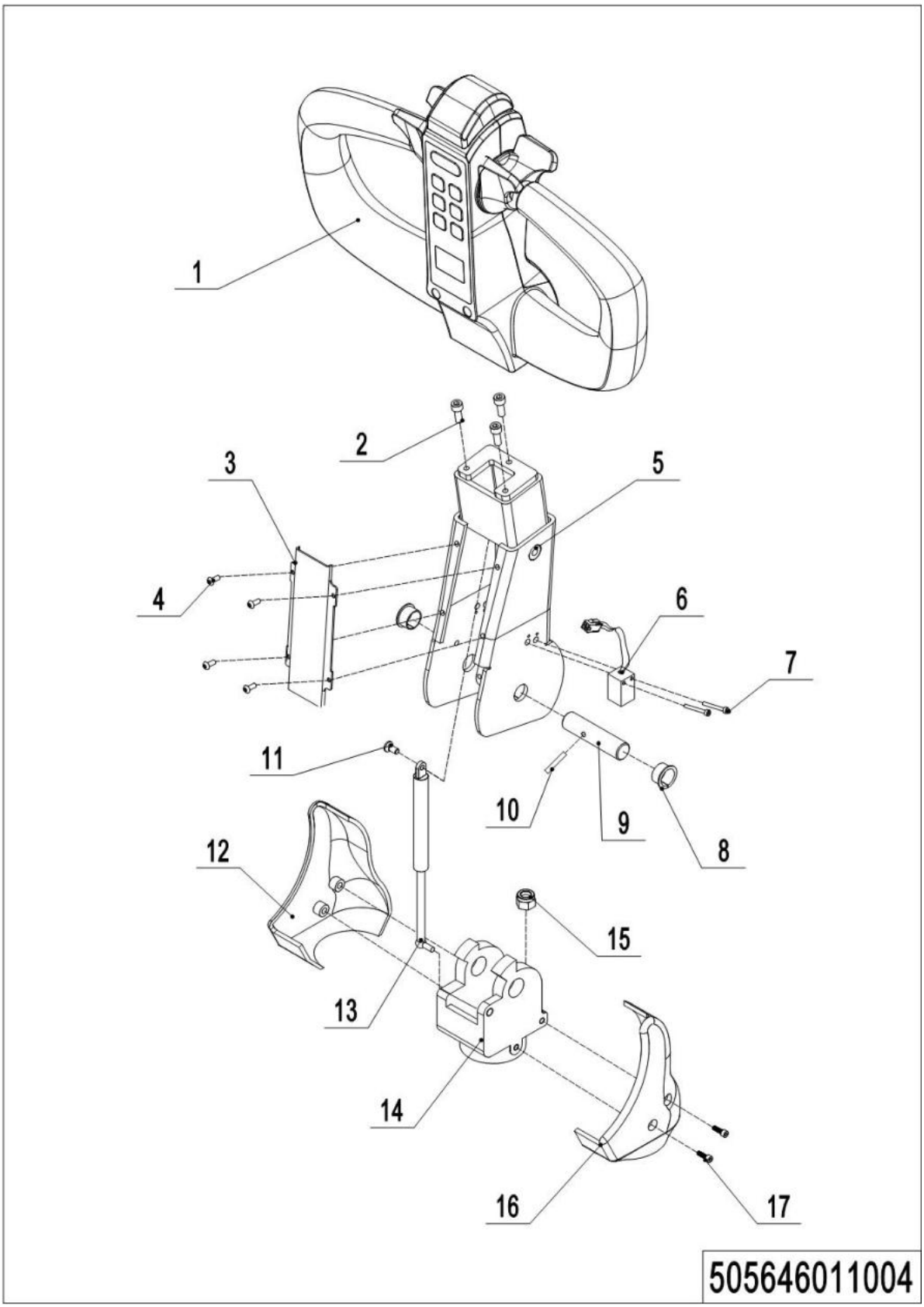

03 Tiller(505646011004)(Coded Lock)

No.	Item Code	Mark	Item Description	Qty.	Substitute	Note
1	922100100029		Tiller	1		
2	910200200035		Screw	4		
3	537211020004		Close Plate	1		
4	910200300005		Screw	4		
5	537211010000		Tiller	1		
6	505633510000		Proximity Switch	1		
7	910200500015		Screw	2		
8	940500200002		Bushing	2		
9	505611020008		Axle	1		
10	910600400013		Spring Pin	1		
11	910200200057		Screw	1		
12	505611020010		Protective Cover	1		
13	940400100044		Air Spring	1		
14	535911020009		Bracket	1		
15	910300500005		Nut	2		
16	505611020011		Protective Cover	1		
17	910200300016		Screw	4		

04 Tiller (505646011005)(Coded Lock)

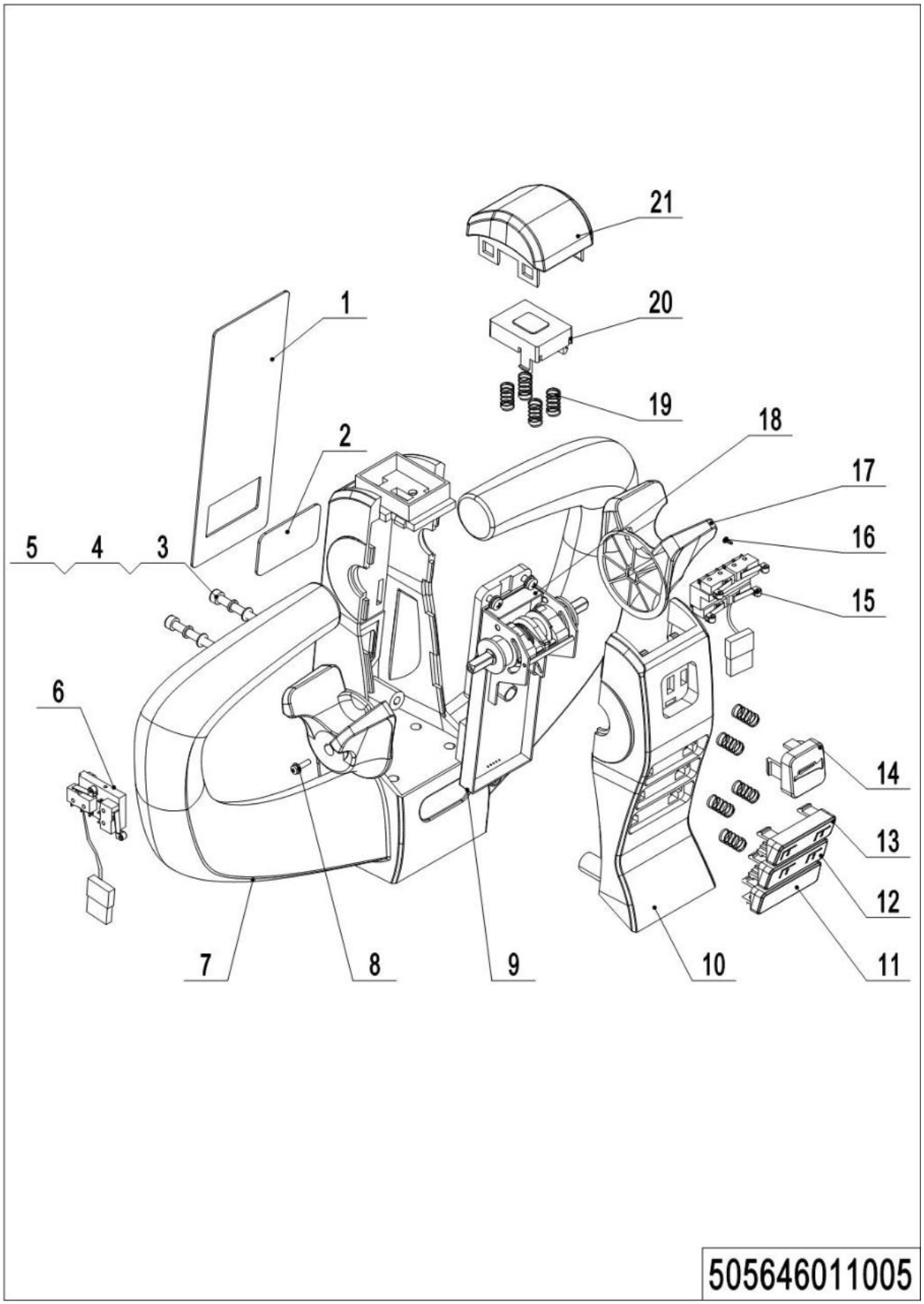

04 Tiller (505646011005)(Coded Lock)

No.	Item Code	Mark	Item Description	Qty.	Substitute	Note
1	509898520017		Button	1		001 .0 1. 90403 00 2
2	509898510003		Screen Protection	1		001 .0 1. 90002 01 8
3	910200200027		Screw	2		001 .0 1. 90101 00 6
4	910400500004		Spring Washer	2		001 .0 1. 90105 00 2
5	910400100004		Flat Washer	2		001 .0 1. 90104 00 1
6	509898510000		Wire Harness	1		09 01 -0 10 1-0 01
7	509898520001		Plastic Handle	1		00 1. 01 .9 000 3001
8	910201900002		Screw	2		001 .0 1. 90101 00 9
9	509898510001		Accelerator	1		09 01 -0 10 1-0 02
10	509898520009		Cover	1		00 1. 01 .9 000 30 02
11	509898520016		Button	1		001 .0 1. 90003 01 0
12	509898520002		Button	1		00 1. 01 .9 000 3006
13	509898520003		Button	1		00 1. 01 .9 000 30 05
14	509898520004		Button	1		00 1. 01 .9 000 30 22
15	509898510002		Wire Harness	1		090 1- 01 01-00 3
16	910201400001		Screw	2		001 .0 1. 90103 00 1
17	509898520008		Dial Key	2		00 1. 01 .9 000 20 03
18	910201900003		Screw	4		001 .0 1. 90101 00 8
19	537098520005		Spring	10		00 1. 01 .9 000 20 22
20	509898520006		Cover	1		00 1. 01 .9 000 30 21
21	509898520007		Button	1		00 1. 01 .9 000 30 04

05 Load Wheel (Tandem) (505646017001)

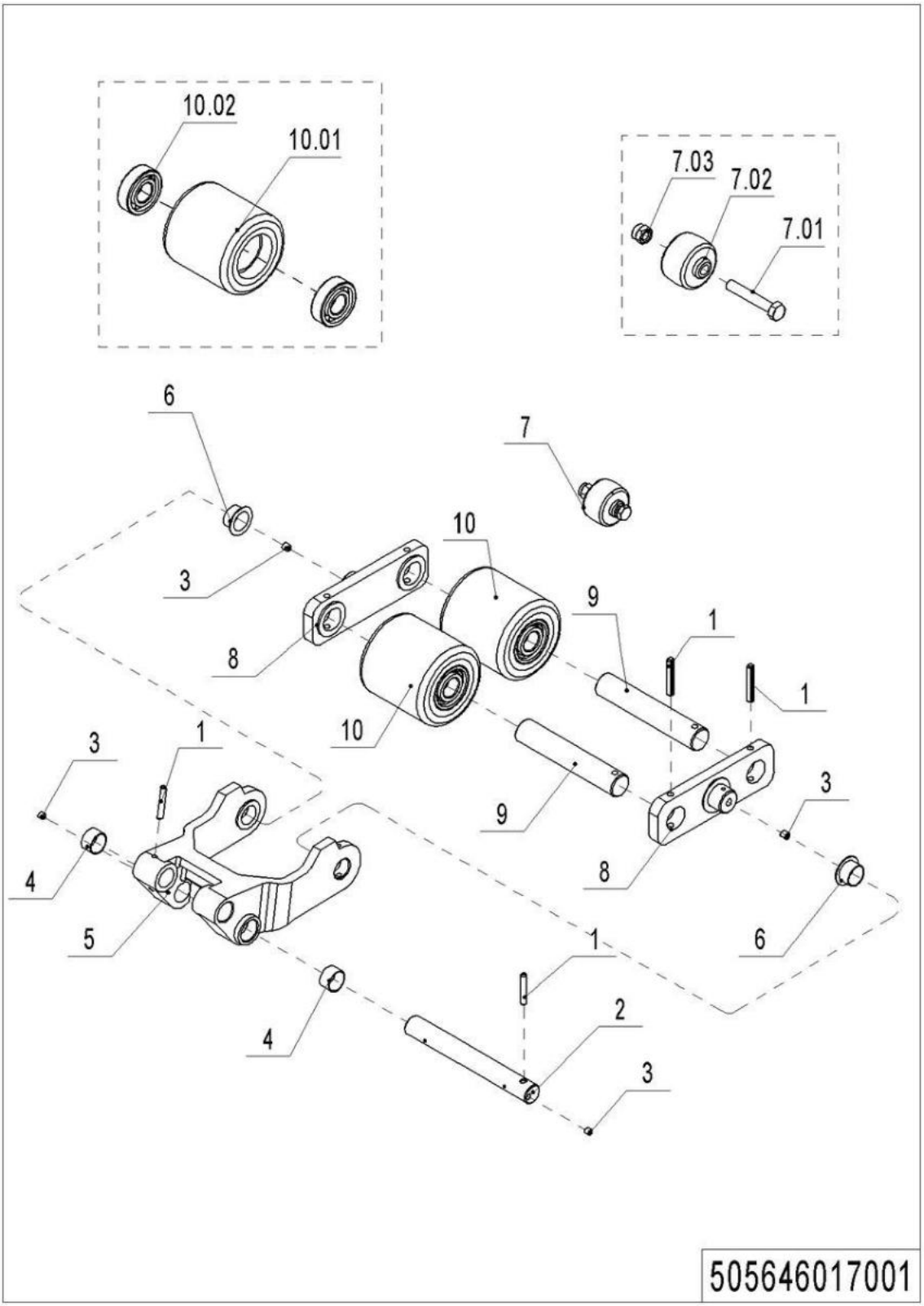

05 Load Wheel (Tandem) (505646017001)

No.	Item Code	Mark	Item Description	Qty.	Substitute	Note
1	910600400027	1	Spring Pin	8		
2	505638520038		Pin	2		
3	911200100001		Oil Cup	2		
4	940500100012		Bushing	4		
5	505638520036		Riser	2		
6	940500200003		Bushing	2		
7	502398510003		Pulley components	2		
7.01	910300500005	1	Nut	2		
7.02	505638520039		Running Pulley	2		
7.03	910100100035	1	Bolt	2		
8	505617020001		Plate	4		
9	505617020000		Axle	4		
10	505698510003		Wheel	4		
10.01	940300300010		Wheel Φ84x84	4		
10.02	910700200019		Bearing	8		

06 Load Wheel (Single) (505646017002)

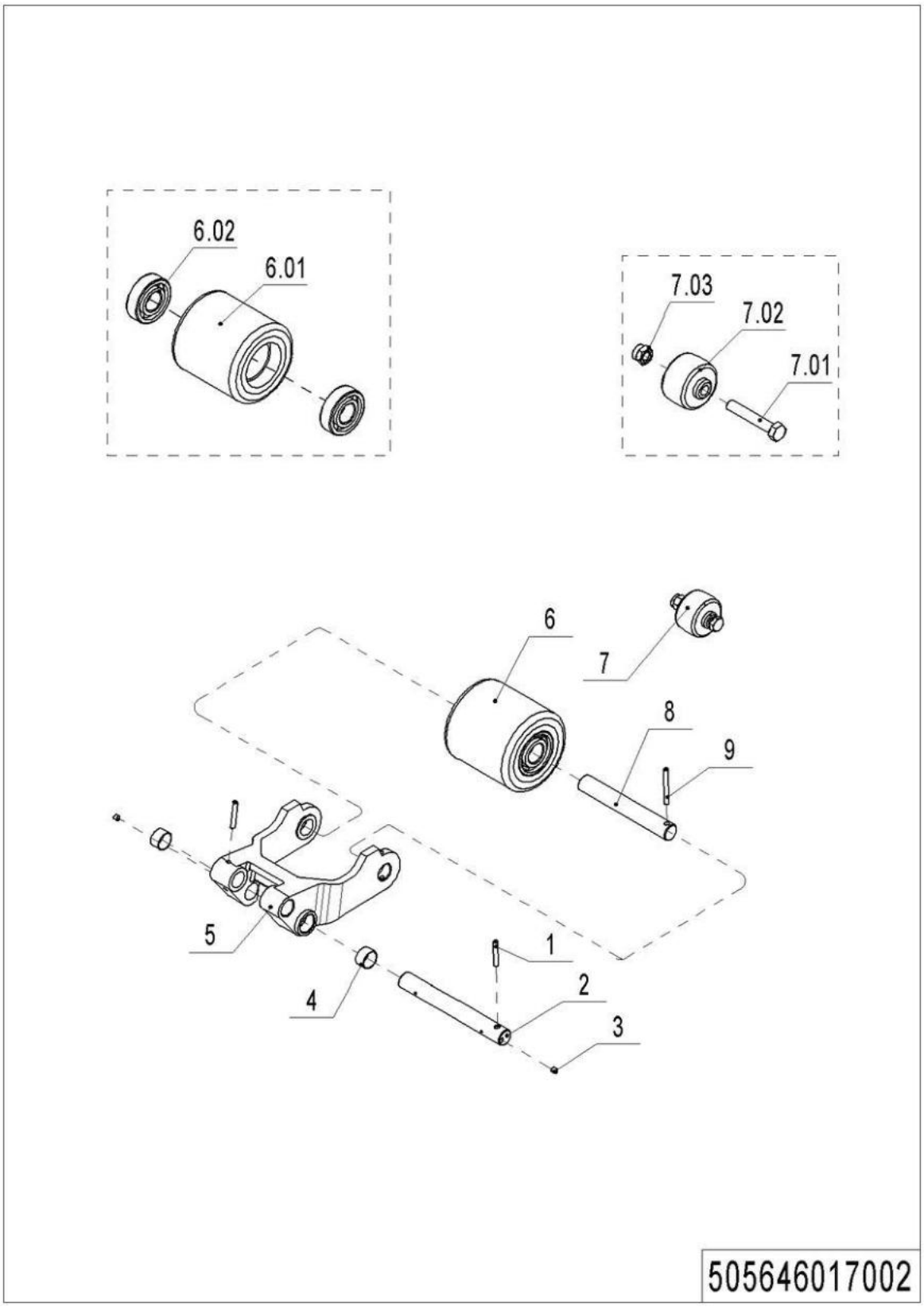

06 Load Wheel (Single) (505646017002)

No.	Item Code	Mark	Item Description	Qty.	Substitute	Note
1	910600400027	1	Spring Pin	4		
2	505638520038		Pin	2		
3	911200100001		Oil Cup	2		
4	940500100012		Bushing	4		
5	505638520036		Riser	2		EU
5	505638520065		Riser	2		US
6	505698510004		Wheel	2		
6.01	940300300006		Wheel Φ82x110	2		
6.02	910700200019		Bearing	4		
7	502398510003		Pulley components	2		
7.01	910300500005		Nut	2		
7.02	505638520039		Running Pulley	2		
7.03	910100100035	1	Bolt	2		
8	505617020002		Axle	2		
9	910600400030	1	Spring Pin	4		

07 Caster (505646016501)

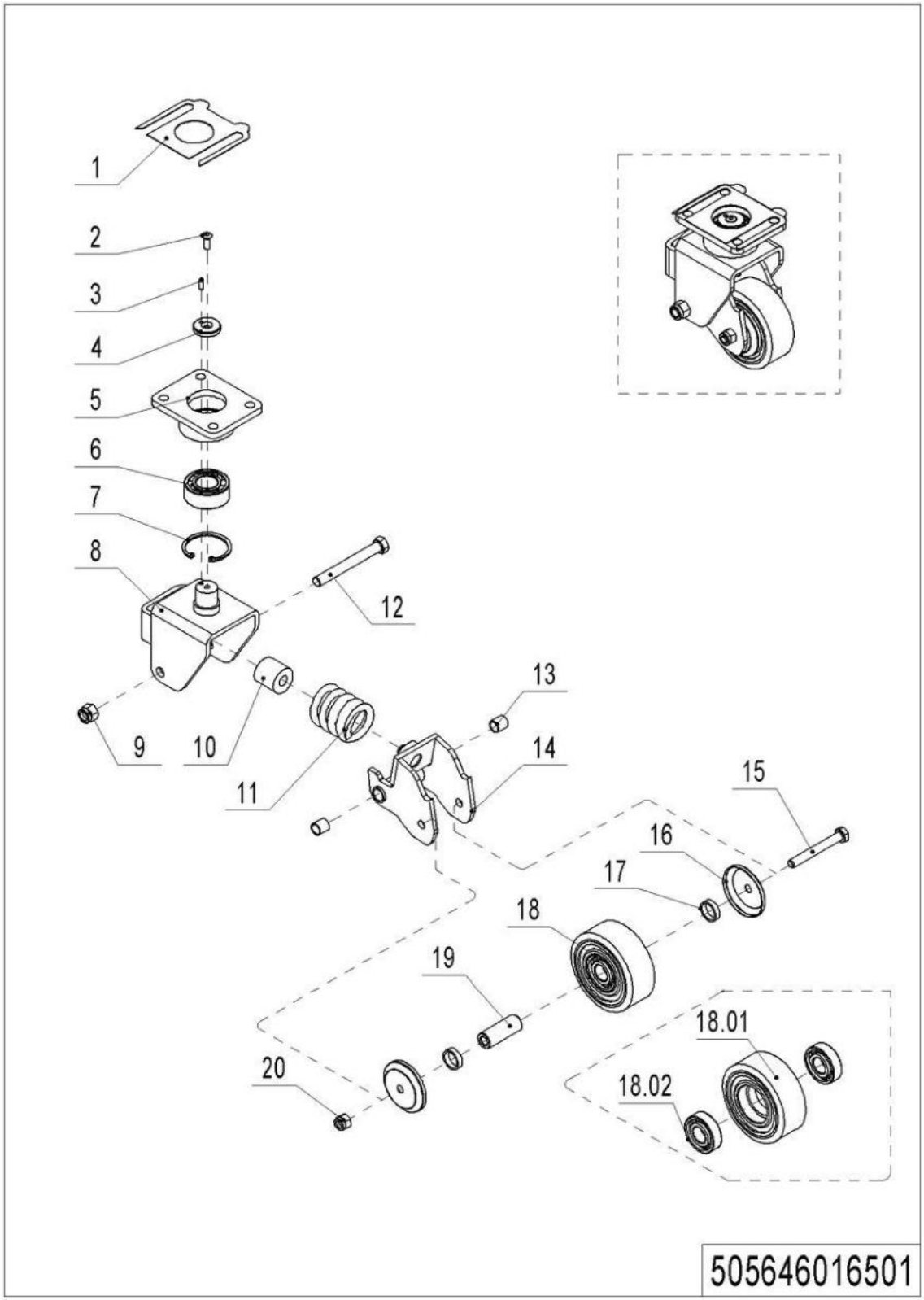

07 Caster (505646016501)

No.	Item Code	Mark	Item Description	Qty.	Substitute	Note
--	505616510000		Caster Assembly	2		
1	505616520014		Pad	2		
2	941100300001	1	Screw	2		
3	910600100004	1	Cylindrical Pin	2		
4	505616520007		Retaining Ring	2		
5	505616510002		Plate	2		
6	910700500002		Bearing	2		
7	910401400016		Circlip	2		
8	505616510001		Wheel Carrier	2		
9	910300500006	1	Nut	1		
10	505616520000		Spring	2		
11	940400500007		Spring	2		
12	941100200002	1	Bolt	2		
13	940500100002		Bushing	4		
14	505616510003		Whirling Arm	2		
15	910100100038	1	Bolt	2		
16	505616520011		Dust Cap	4		
17	505616520012		Check Ring	4		
18	503598510003		Caster Assembly	2		
18.01	940300300018		WheelΦ100x40	2		
18.02	910700200019		Bearing	4		
19	505616520013		Bushing	2		
20	910300500005	1	Nut	1		

Chapter 6: Electrical Parts

01 Display Assembly (505646010001)(Key Switch)

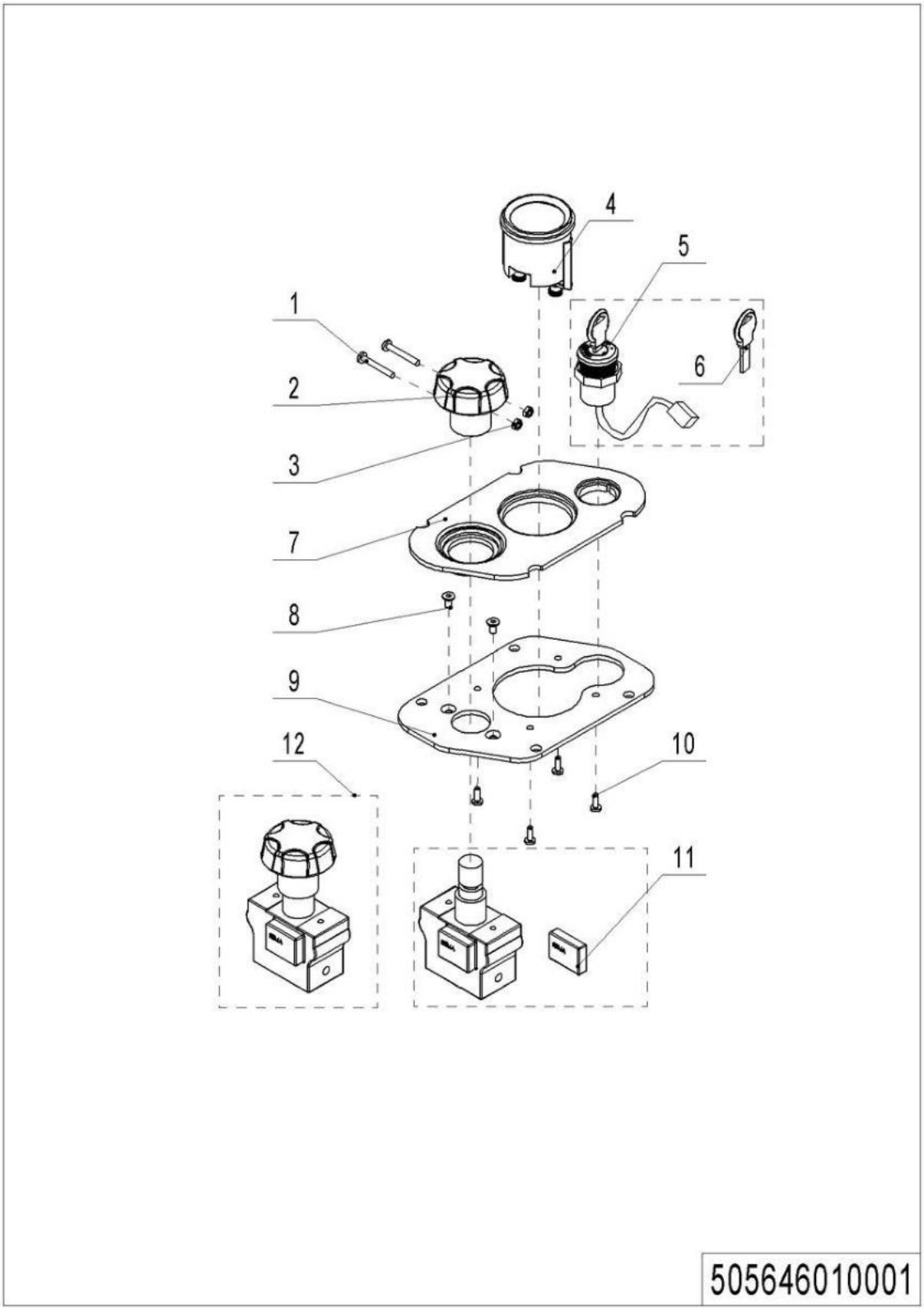

01 Display Assembly (505646010001)(Key Switch)

No.	Item Code	Mark	Item Description	Qty.	Substitute	Note
1	910200500016	1	Screw	2		
2	505698520029	2	Button	1		
3	910300100002	1	Nut	2		
4	921100100094	2	Battery Indicator	1		with QT controller
4	921100100001	2	Battery Indicator	1		
4	921100100044	2	Battery Indicator	1		
5	505634010000	2	Key Switch	1		
6	505698520031	2	Key	1		
7	505610020000		Panel	1		
8	910200400010	1	Screw	2		
9	505610020001		Fixing Plate	1		
10	910201300001	1	Screw	4		
11	920200100011	2	Emergency Button	1		
12	920200100001	2	Emergency Button	1		

02 Display Assembly (505646010002)(Key Switch)

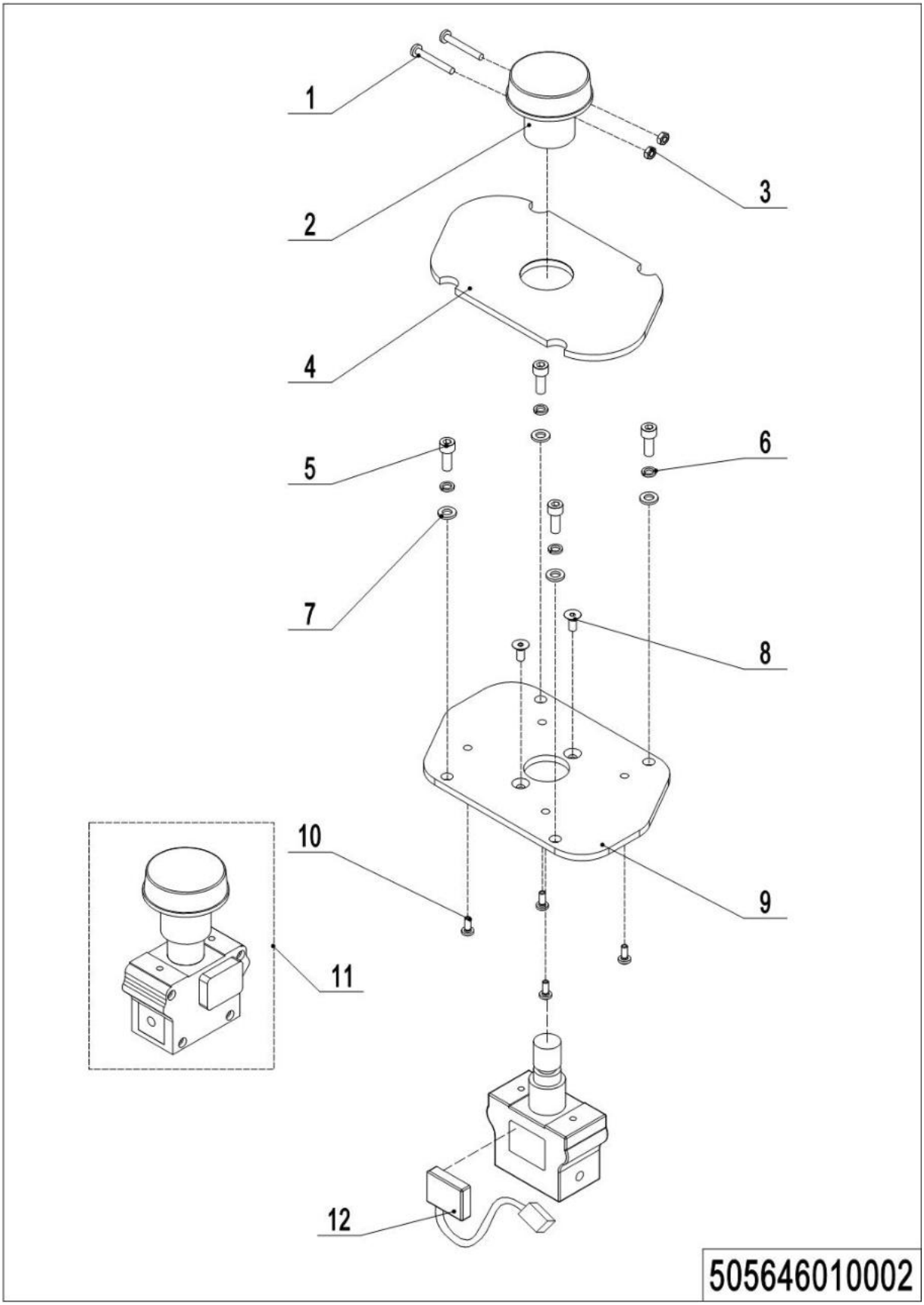

02 Display Assembly (505646010002)(Key Switch)

No.	Item Code	Mark	Item Description	Qty.	Substitute	Note
1	910200500016		Screw	2		
2	505698520029		Button	1		
3	910300100002		Nut	2		
4	505610010000		Panel	1		
4	910200200035		Screw	4		
5	910400500005		Spring Washer	4		
6	910400100005		Flat Washer	4		
7	910200400010		Screw	2		
8	505610020004		Fixing Plate	1		
9	910200500021		Screw	4		
10	920200100001		Emergency Button	1		
11	505698520030		Proximity Switch	1		
12	910200500016		Screw	2		

03 Charger (505646036501)

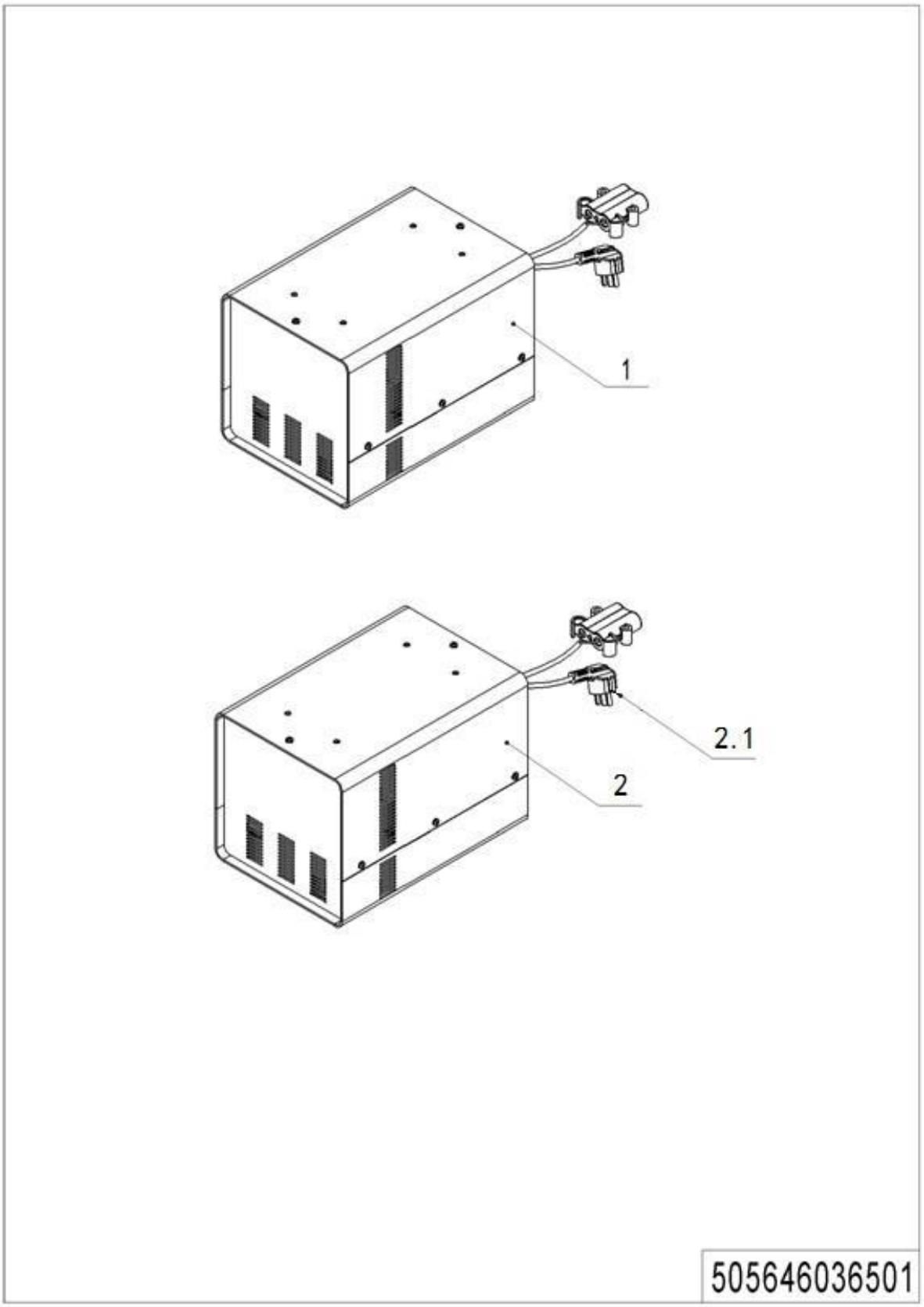

03 Charger (505646036501)

No.	Item Code	Mark	Item Description	Qty.	Substitute	Note
1	921000200013	2	Charger24V25A(Aisa-CHN)	1		Available1, 2
2	921000200485	2	Charger24V25A	1		Available1, 2
2.1	921500200021	2	Power Cord (Asia)	1		Optional for 2
2.1	921500200027	2	Power Cord(ENG)	1		Optional for 2
2.1	921500200054	2	Power Cord(US)	1		Optional for 2
2.1	921500200022	2	Power Cord(EU)	1		Optional for 2
2.1	921500200024	2	Power Cord(AUS)	1		Optional for 2
2.1	921500200025	2	Power Cord(ITA)	1		Optional for 2
2.1	921500200026	2	Power Cord(SWE)	1		Optional for 2

04 Traction Battery (505646037002)

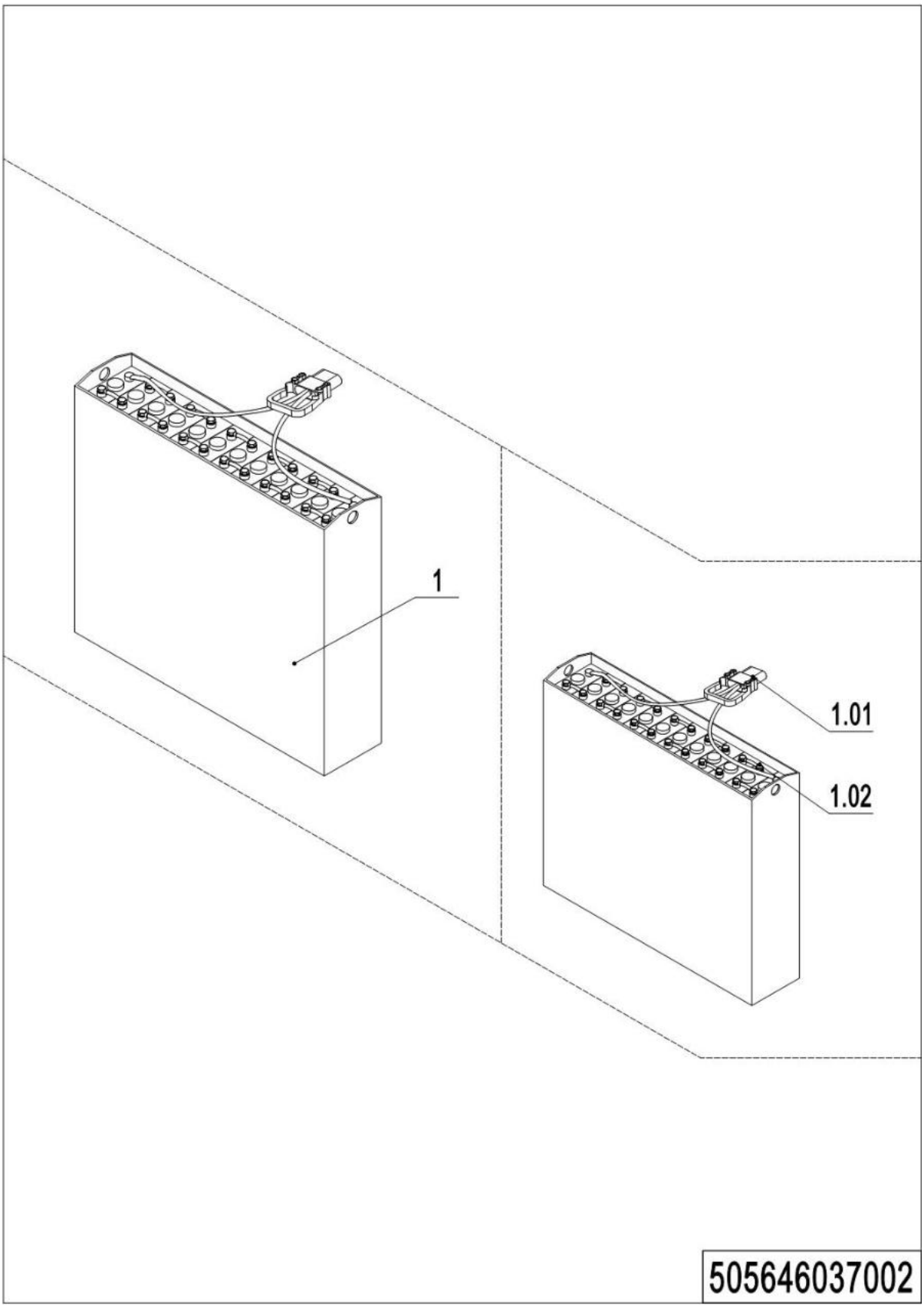

04 Traction Battery (505646037002)

No.	Item Code	Mark	Item Description	Qty.	Substitute	Note
1	505637010006		Battery24V180Ah	1		
1	506737010007		Batter24V210Ah	1		
1.01	505698520000		Bolt	24		
1.02	505698510001		Connector	1		

05 Controller(505646033002)

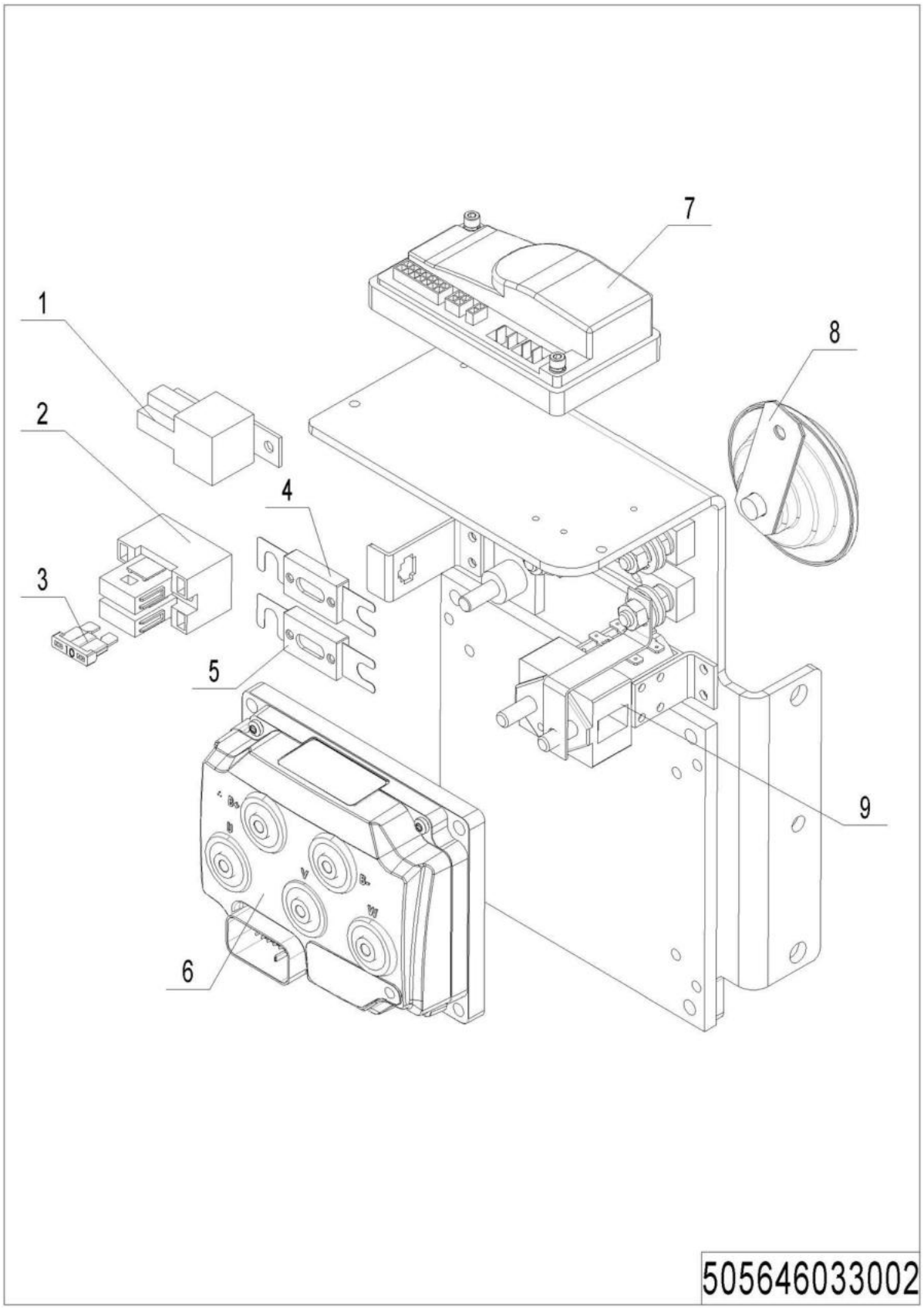

05Controller(505646033002)

No.	Item Code	Mark	Item Description	Qty.	Substitute	Note
1	920800100011	2	Relay	1		
2	920100400005	2	Fuse Holder	1		
3	920100200002		Fuse	1		
4	920100100004		Fuse	1		
5	920100100007		Fuse	1		
6	921400100131		Controller	1		LVM24S20
6	921400100064	2	Controller	1		
7	921400100134	2	Controller	1		DVM24S04
7	921400100077	2	Controller	1		EPS
8	920500100001	2	Horn	1		
9	920700100004	2	Contactor	1		

06 Controller (505646033004)

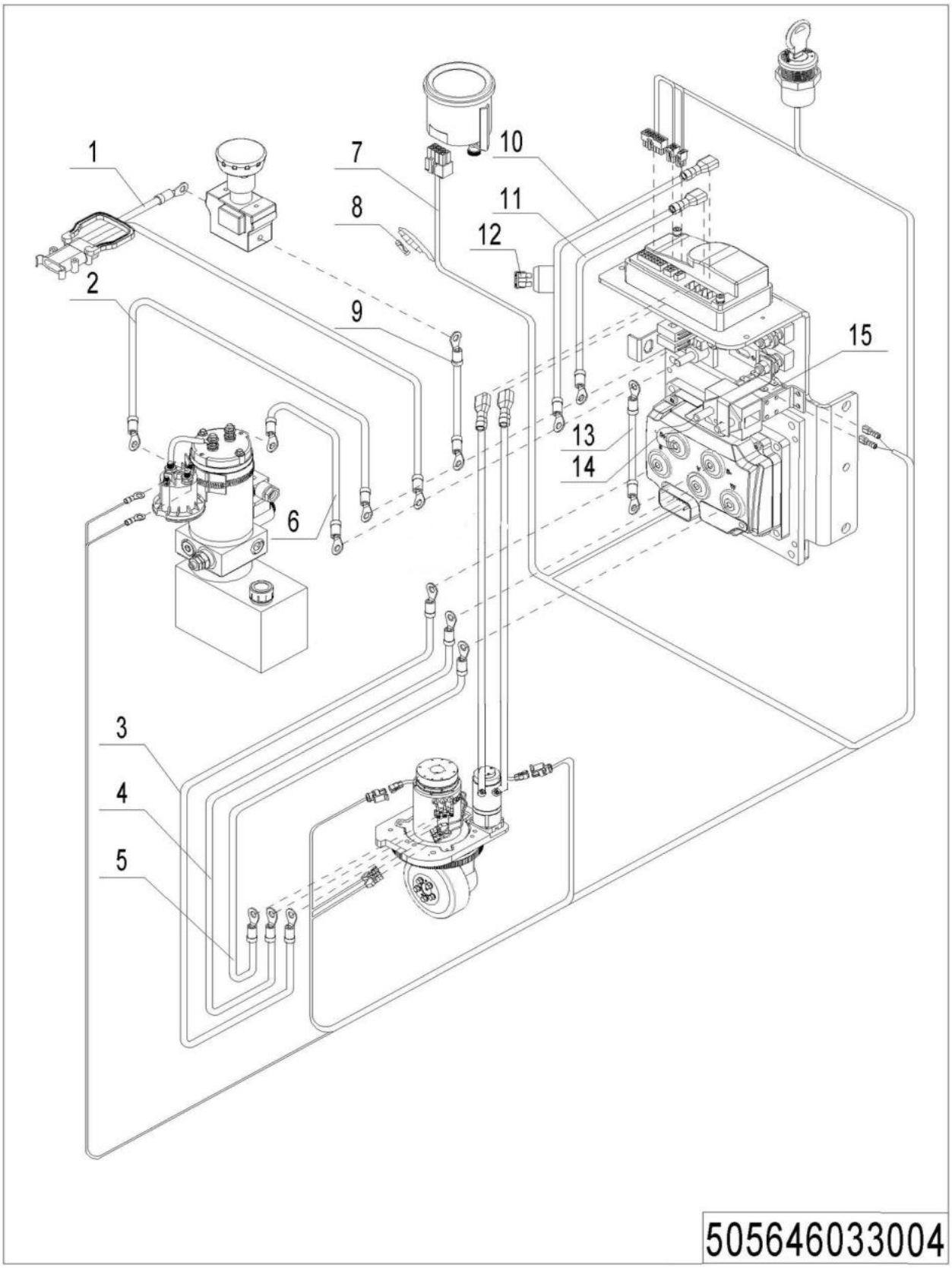

06 Controller (505646033004)

No.	Item Code	Mark	Item Description	Qty.	Substitute	Note
1	505633010004	2	Wire Harness	1		Key Switch
1	505633010047	2	Wire Harness	1		Coded Lock
2	505633010003	2	Cable	1		
2	505633010009	2	Cable	1		EPS
3	505633010002	2	Cable	1		
3	505633010008	2	Cable	1		EPS
4	505633010017	2	Cable	1		
4	505633010020	2	Cable	1		EPS
5	505633010018	2	Cable	1		
5	505633010021	2	Cable	1		EPS
6	505633010019	2	Cable	1		
6	505633010022	2	Cable	1		EPS
7	505633010057	2	Wire Harness	1		QT EPS + Lead-acid
7	505633010055	2	Wire Harness	1		QT EPS + Li
7	505633010058	2	Wire Harness	1		QT + Li
7	505633010060	2	Wire Harness	1		QT + Lead-acid
7	505633010065	2	Wire Harness	1		QT + Li + Key Switch
7	505633010029	2	Wire Harness	1		Key Switch
7	505633010043	2	Wire Harness	1		Coded Lock
7	505633010046	2	Wire Harness	1		Key Switch + Safety switch
7	505633010045	2	Wire Harness	1		Coded Lock + Safety switch
7	505633010048		Wire Harness	1		EPS+ Key Switch
7	505633010049	2	Wire Harness	1		EPS+ Coded Lock
8	920100300001		Fuse	1		
9	505633010005	2	Cable	1		
10	505633010064	2	Wire Harness	1		QT EPS
10	505633010014	2	Wire Harness	1		EPS
11	505633010063	2	Cables	1		QT EPS
11	505633010026	2	Cables	1		EPS
12	920100200013	2	Fuse 30A	1		QT EPS

06 Controller (505646033004) continuation

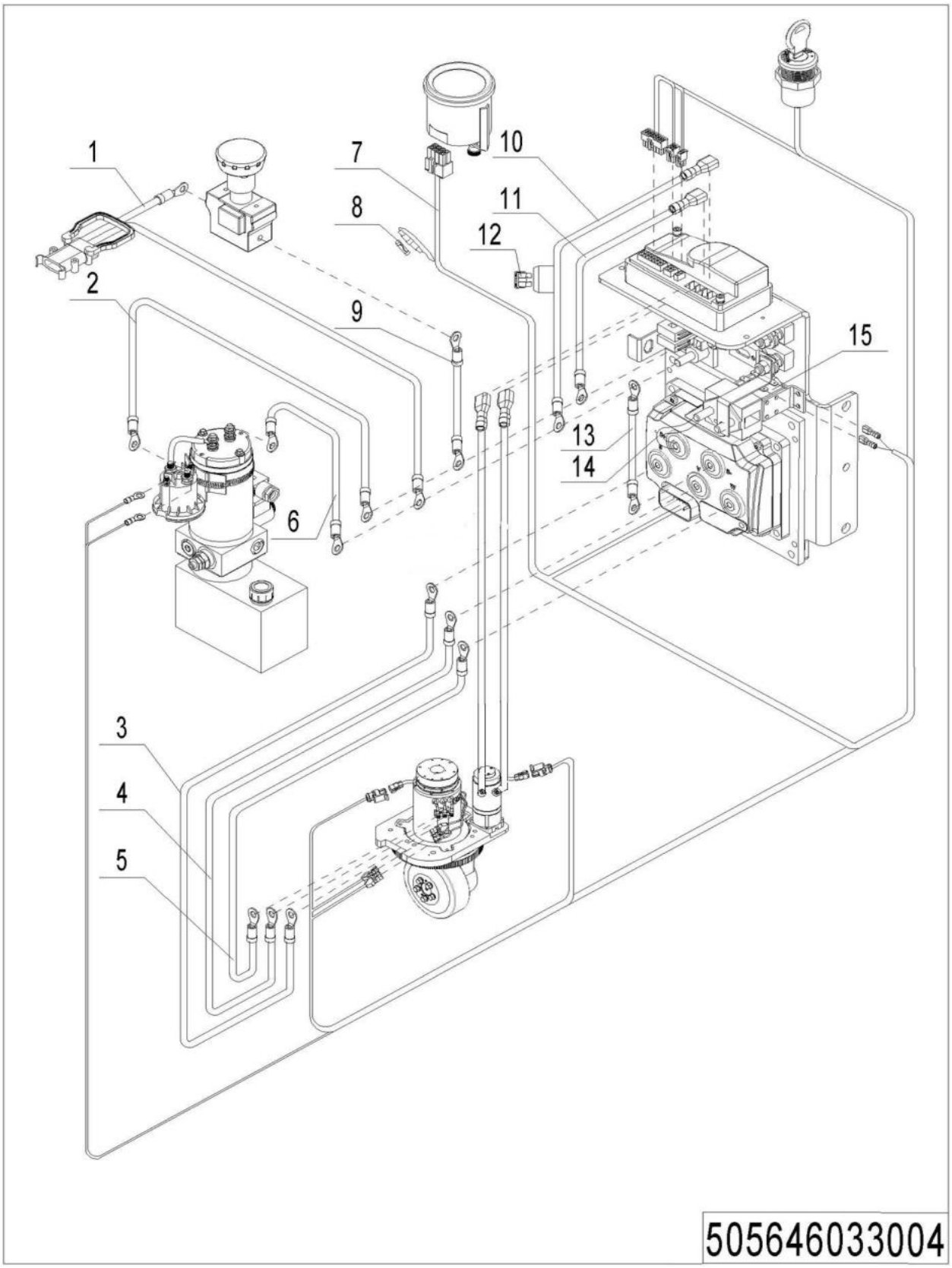

06 Controller (505646033004) continuation

No.	Item Code	Mark	Item Description	Qty.	Substitute	Note
12	920100200003	2	Fuse	1		EPS
13	505633020007	2	Copper Busbar	1		
14	505633020006	2	Copper Busbar	1		
15	505633010059	2	Electronic Components	1		QT
15	505633010056	2	Electronic Components	1		QT EPS
15	505633010044	2	Electronic Components	1		
15	505633010050	2	Electronic Components	1		EPS

Chapter 7: Special Parts

01 Load Backrest-EU (505646040501)

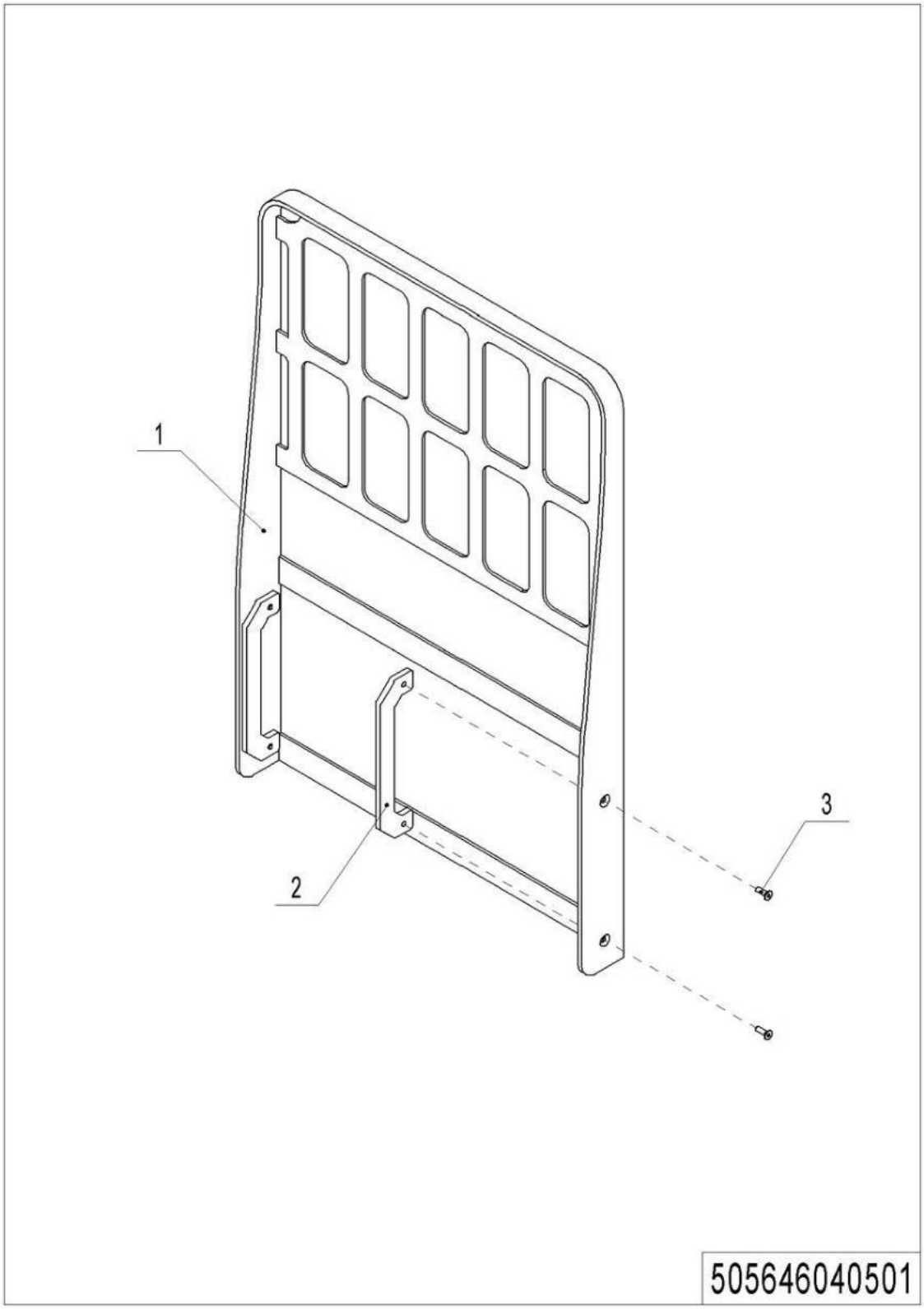

01 Load Backrest-EU (505646040501)

No.	Item Code	Mark	Item Description	Qty.	Substitute	Note
1	505640510001		Load Backrest	1		
2	505640520004		Mounting Plate	2		
3	910200400036	1	Screw	4		

02 Guard Arm (505646017501)

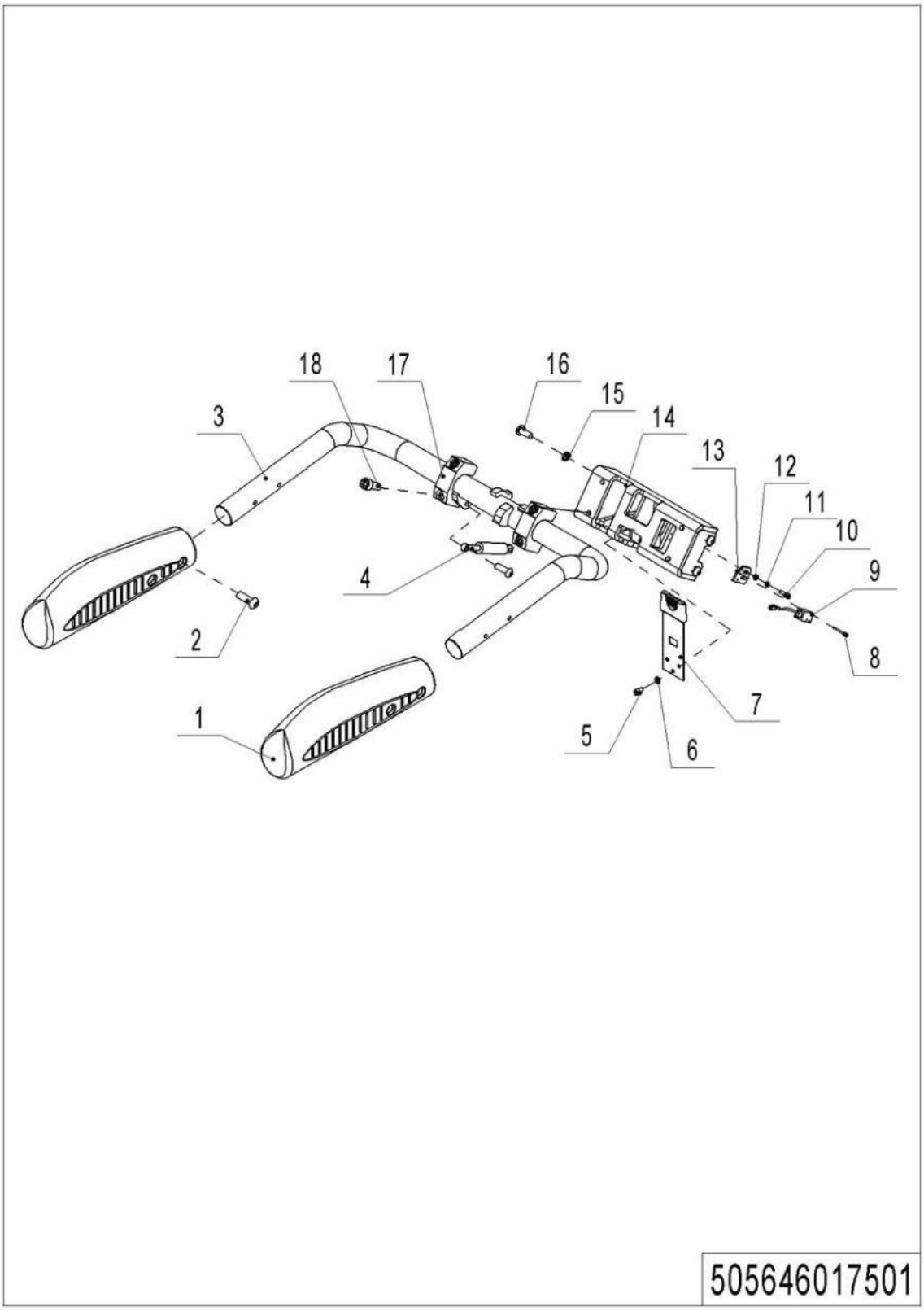

02 Guard Arm (505646017501)

No.	Item Code	Mark	Item Description	Qty.	Substitute	Note
1	505617510002		Guard Arm Sleeve	1		
2	910200300025	1	Screw	5		
3	505617510001		Guard Arm	1		
4	940400100006		Air Spring	1		
5	910200300017	1	Screw	3		
6	910400500005	1	Spring Washer	3		
7	505617510005		Leaf Spring	1		
8	910200500015	1	Screw	2		
8	910200500015	1	Screw	4		Double switch
9	505633510001	2	Proximity Switch	1		
9	505633510001	2	Proximity Switch	2		Double switch
10	910400500004	1	Spring Washer	2		
11	910400100004	1	Flat Washer	2		
12	910200200023	1	Screw	2		
13	532617520001		Mounting Plate	1		
14	505617510000		Base	1		
15	910400500007	1	Spring Washer	4		
16	910100300036	1	Bolt	4		
17	505617520005		Fixing Base	2		
18	910200200080	1	Screw	4		
--	505698510012		Protective Arm	1		

03 Platform (505646018001)

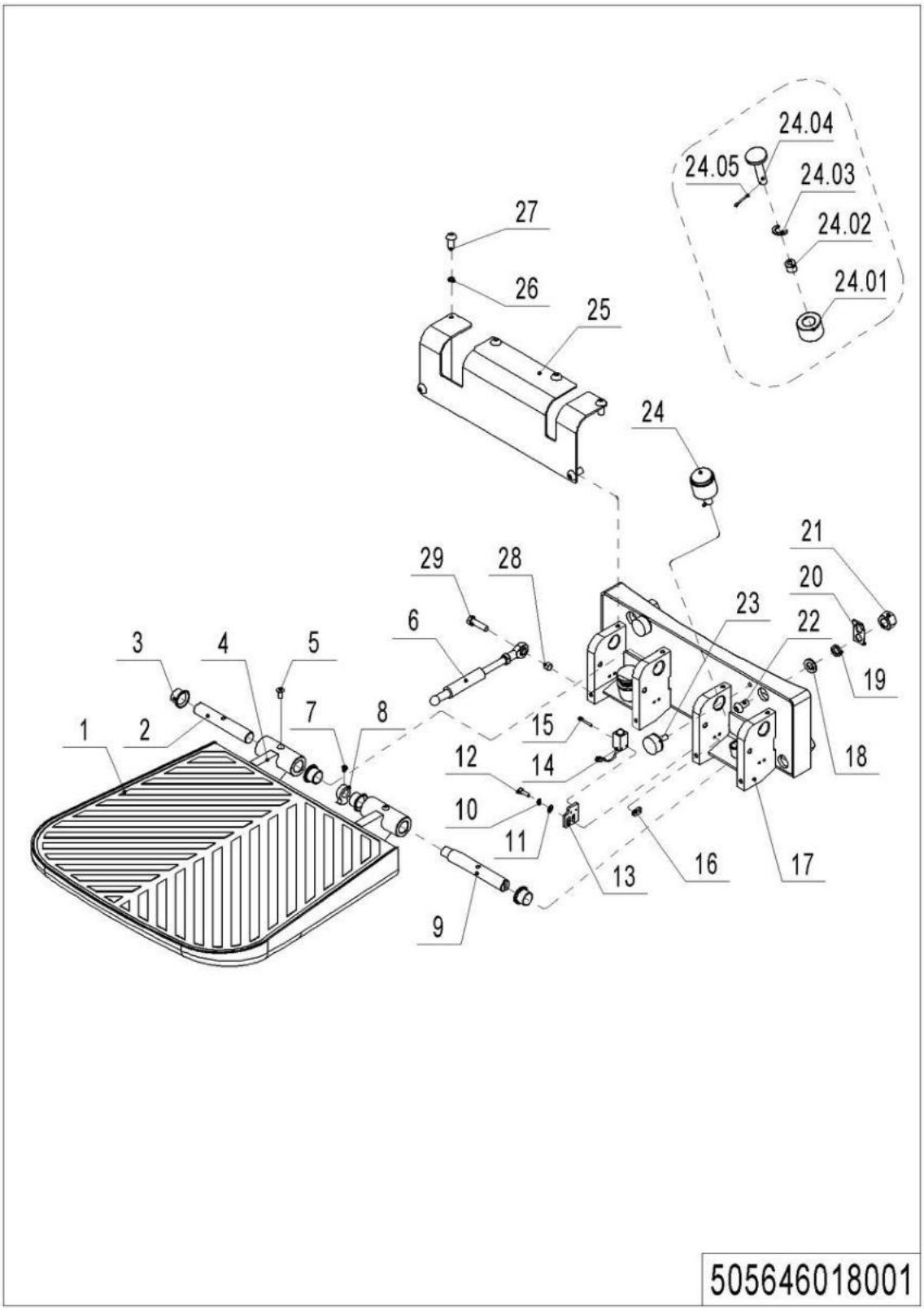

03 Platform (505646018001)

No.	Item Code	Mark	Item Description	Qty.	Substitute	Note
1	505618020018		Rubber Mat	1		
2	505618020020		Axle	1		
3	940500200008		Bushing	4		
4	505618010000		Platform	1		
5	910200300018	1	Screw	2		
6	940400100039		Air Spring	1		
7	910300400006		Nut	1		
8	505618020024		Cam	1		
9	505618020017		Pin	1		
10	910400500004	1	Spring Washer	2		
11	910400100004	1	Flat Washer	2		
12	910200200023	1	Screw	2		
13	505618020026		Mounting Plate	1		
14	910200500015	1	Screw	2		
14	910200500015	1	Screw	4		Double switch
15	505633510002	2	Proximity Switch	1		
15	505633510002	2	Proximity Switch	2		Double switch
16	505618020027		Mounting Plate	1		
17	505618010001		Mounting Base	1		
18	910400100008	1	Flat Washer	4		
19	910400500008	1	Spring Washer	4		
20	505618020025		Pipe Clip	1		
21	910300500006	1	Nut	4		
22	910200200100	1	Screw	4		
23	505618020016		Crash Pad	2		
24	505698510002		Buffer Kits	2		
24.01	505618020029		Crash Pad	2		
24.02	505618020030		Sleeve	2		
24.03	505618020032		Pad	2		
24.04	505618020021		Pin	2		

03 Platform (505646018001) Continuation

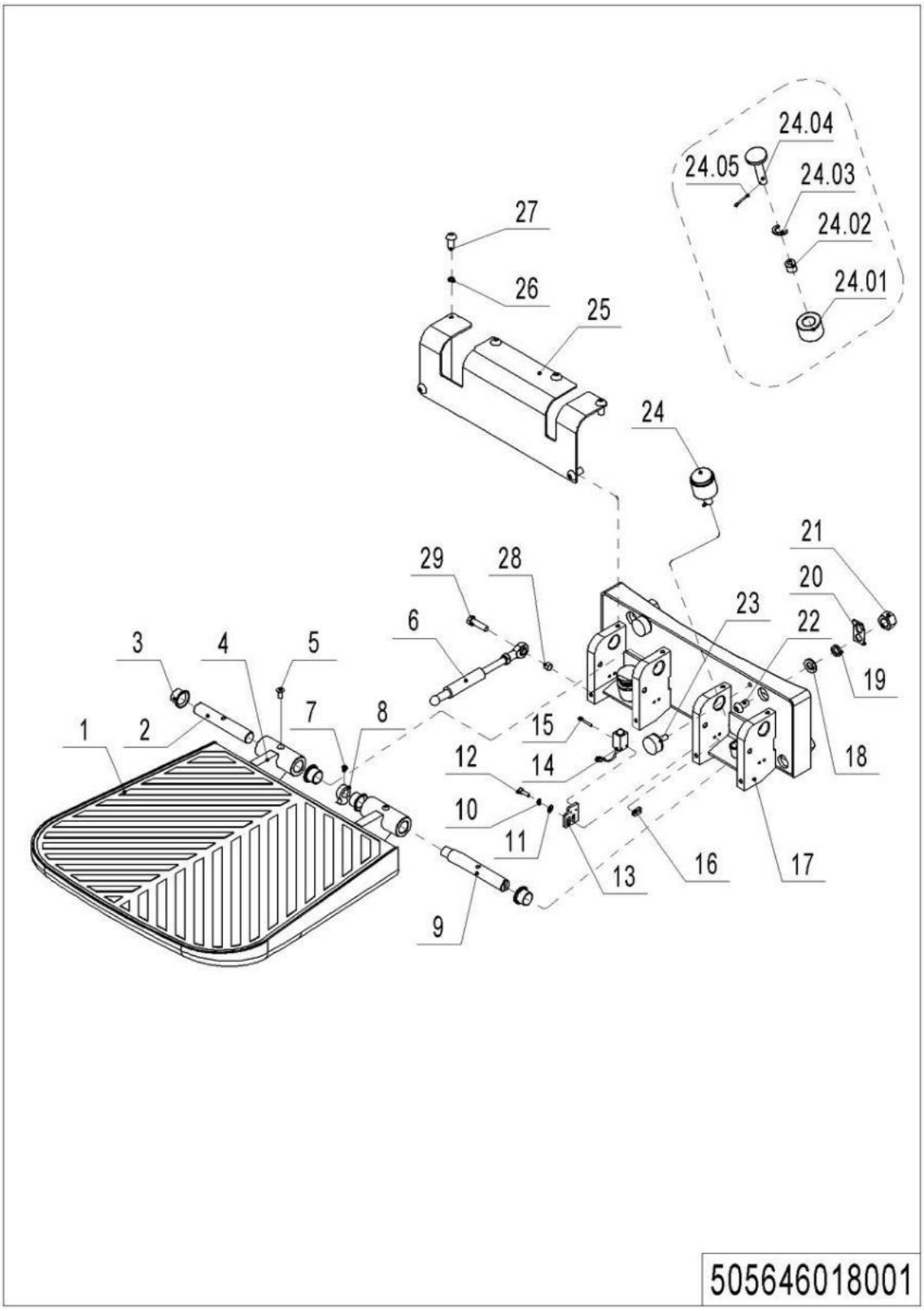

03 Platform (505646018001) Continuation

No.	Item Code	Mark	Item Description	Qty.	Substitute	Note
24.05	910600600026	1	Cotter Pin	2		
25	505618020019		Protective Cover	1		
26	910400500005	1	Spring Washer	6		
27	910200300017	1	Screw	6		
28	505618020028		Spacer Bush	1		
29	910100300024	1	Bolt	1		
--	505698510013		Footboard Kit	1		

Chapter 8: Others

01 Labels and Decals-EU (505646047001)

01 Labels and Decals-EU (505646047001)

No.	Item Code	Mark	Item Description	Qty.	Substitute	Note
1	941200300002		Label	1		
2	941200100003		Label	1		
3	941200200010		Label	1		
4	941200300001		Label	2		
5	505647020001		Truck data plate	1		
6	941200300003		Label	1		

02 Labels and Decals-US (505646047002)

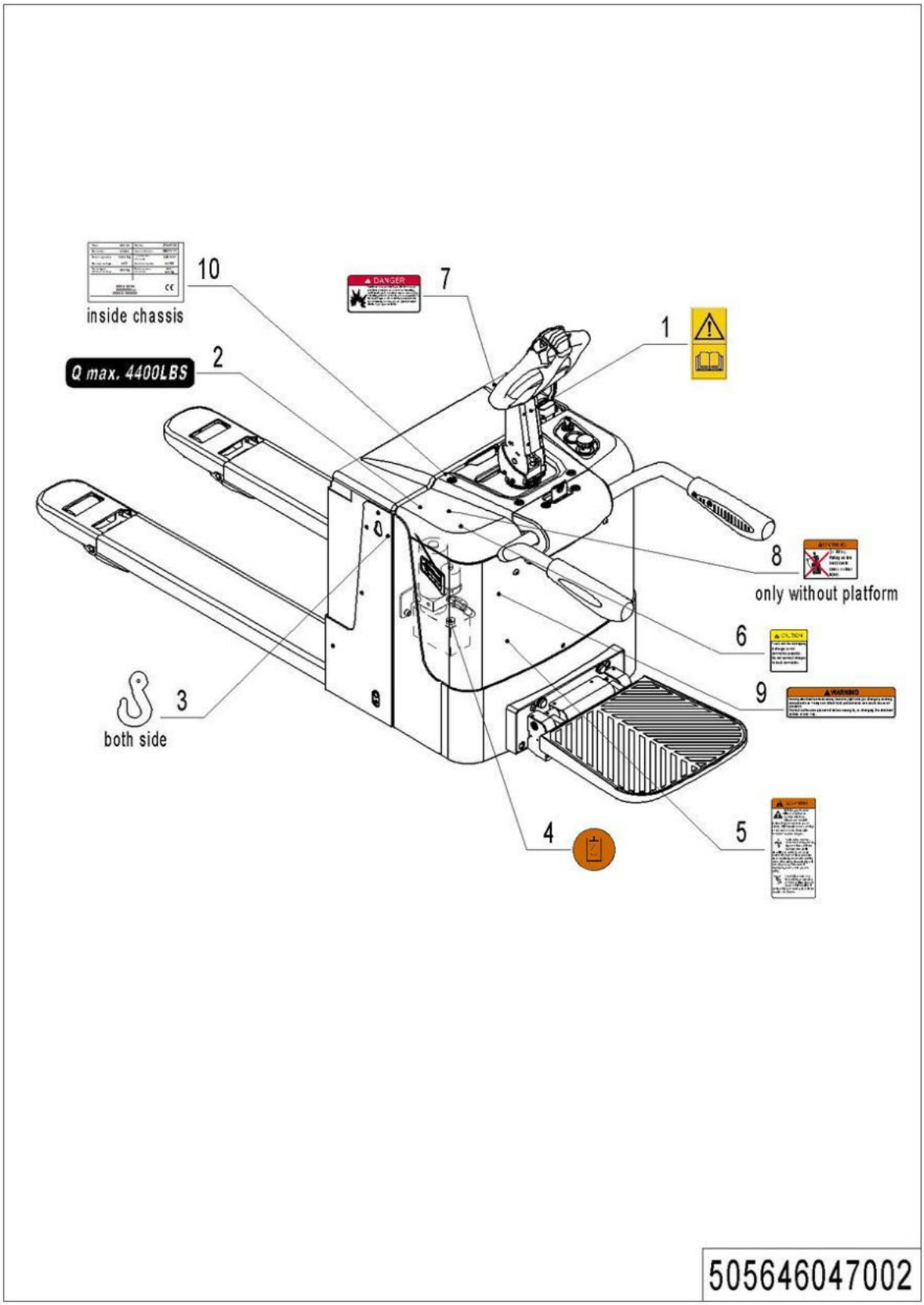

02 Labels and Decals-US (505646047002)

No.	Item Code	Mark	Item Description	Qty.	Substitute	Note
1	941200300002		Label	1		
2	941200200038		Label	1		
3	941200300001		Label	2		
4	941200300003		Label	1		
5	941200100009		Label	1		
6	941200100012		Label	1		
7	941200100013		Label	1		
8	941200100011		Label	1		
9	941200100010		Label	1		
10	505647020002		Truck data plate	1		

Appendix

01 Hydraulic Circuit Diagram (505646045501)

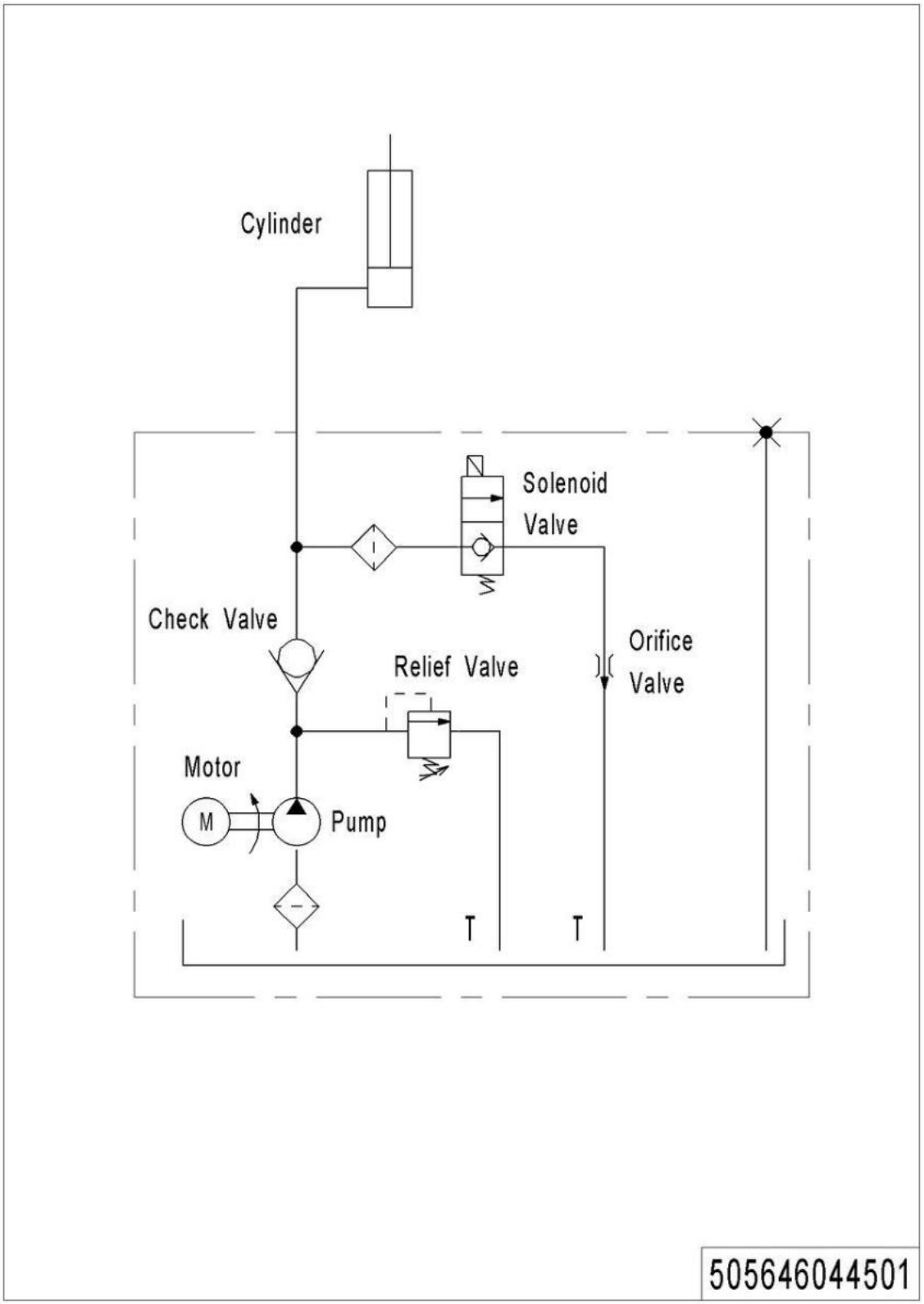

02 Electrical Circuit Diagram, Key Switch (505646045506)

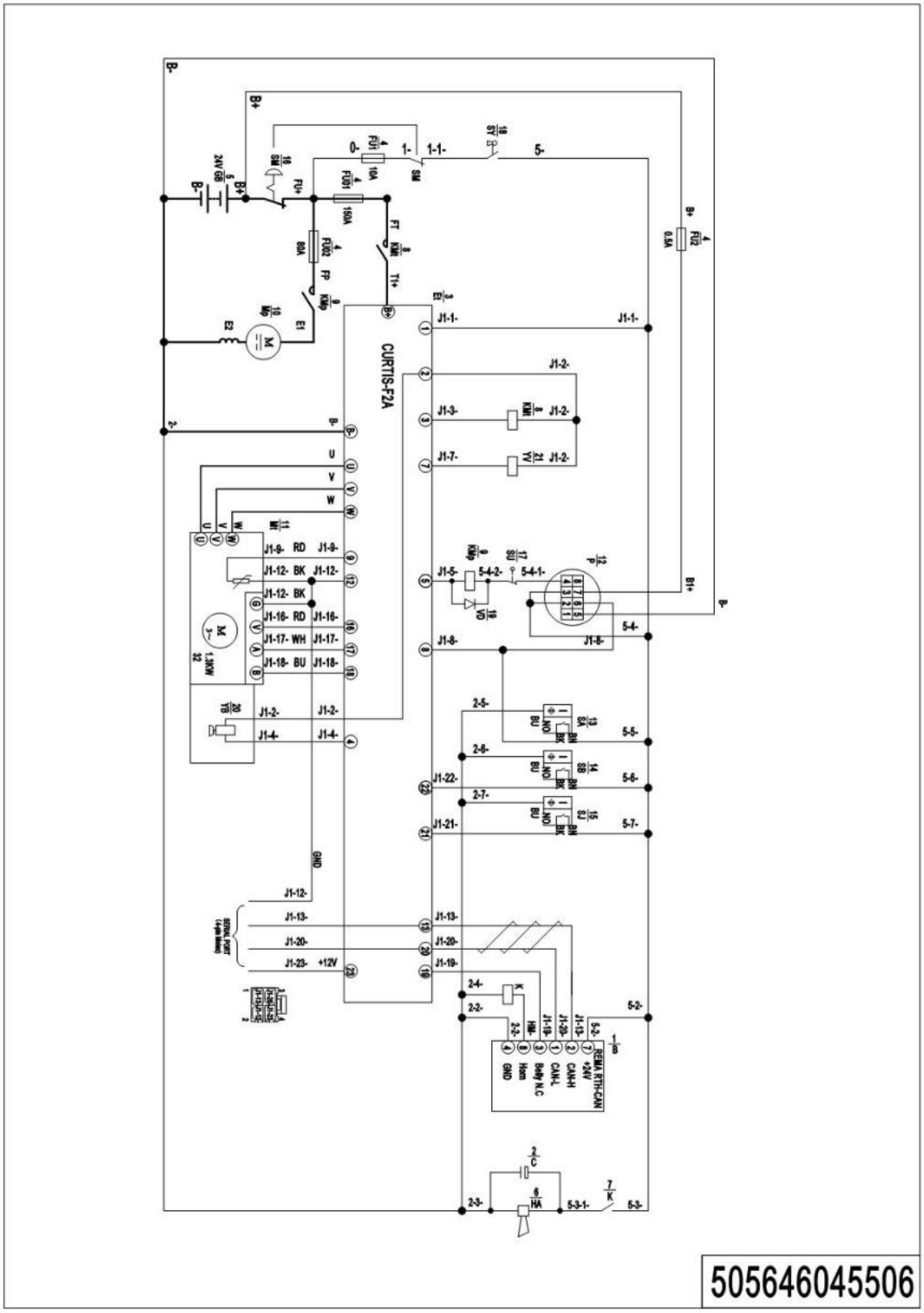

03 Electrical Circuit Diagram, Coded Lock (505646045507)

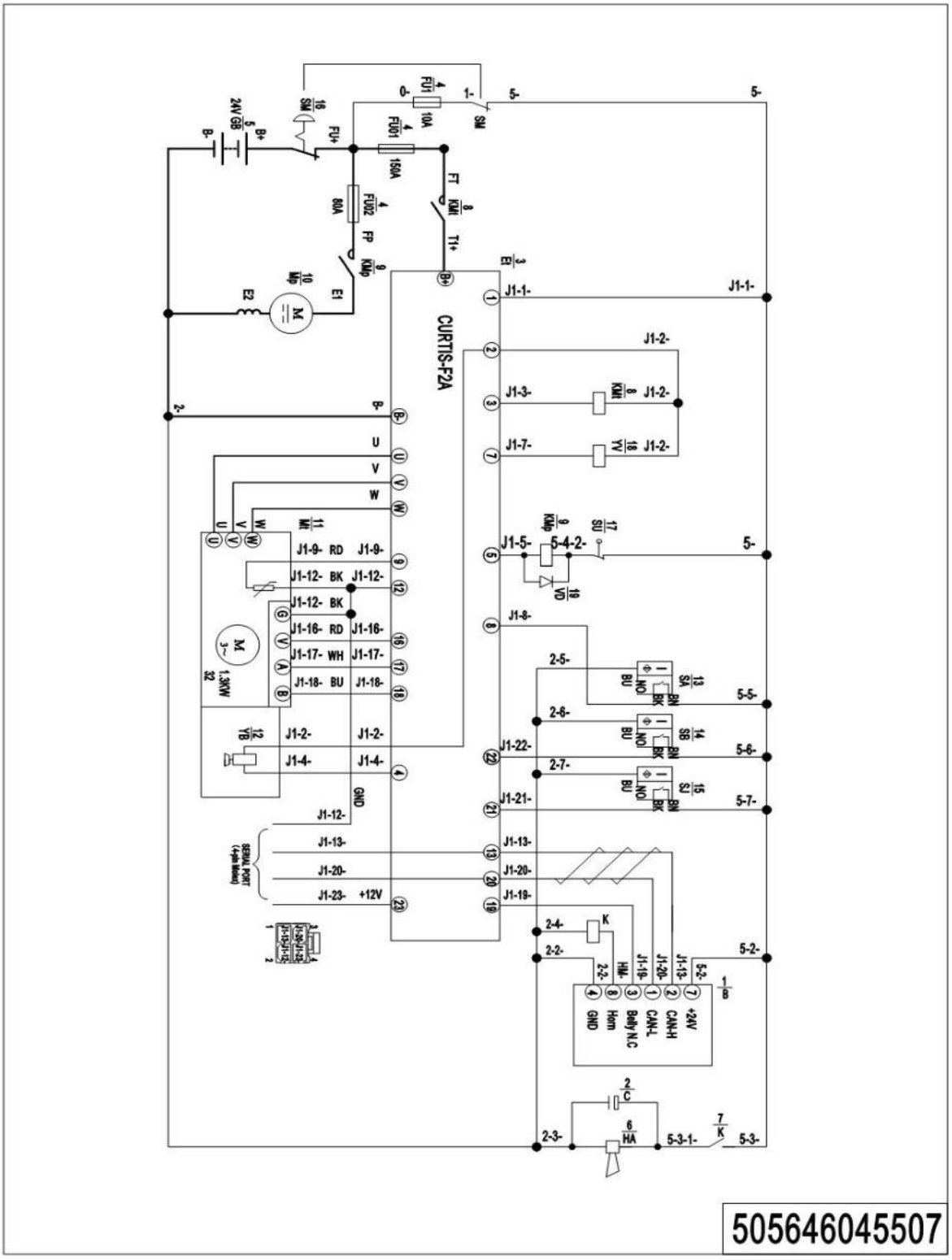

505646045507

04 Electrical Circuit Diagram, Key Switch + Double switch (505646045508)

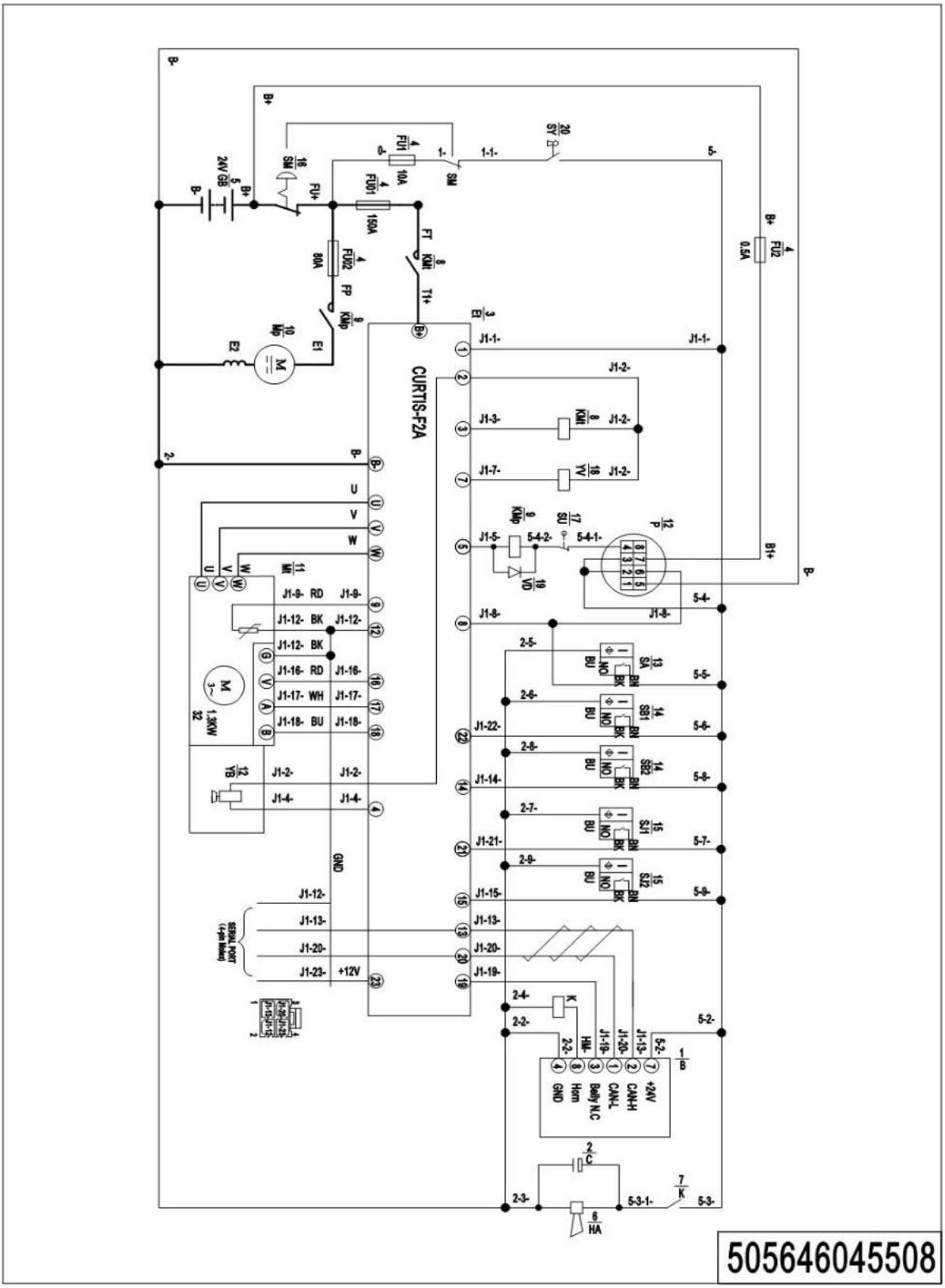

05 Electrical Circuit Diagram, Coded Lock + Double switch（505646045509）

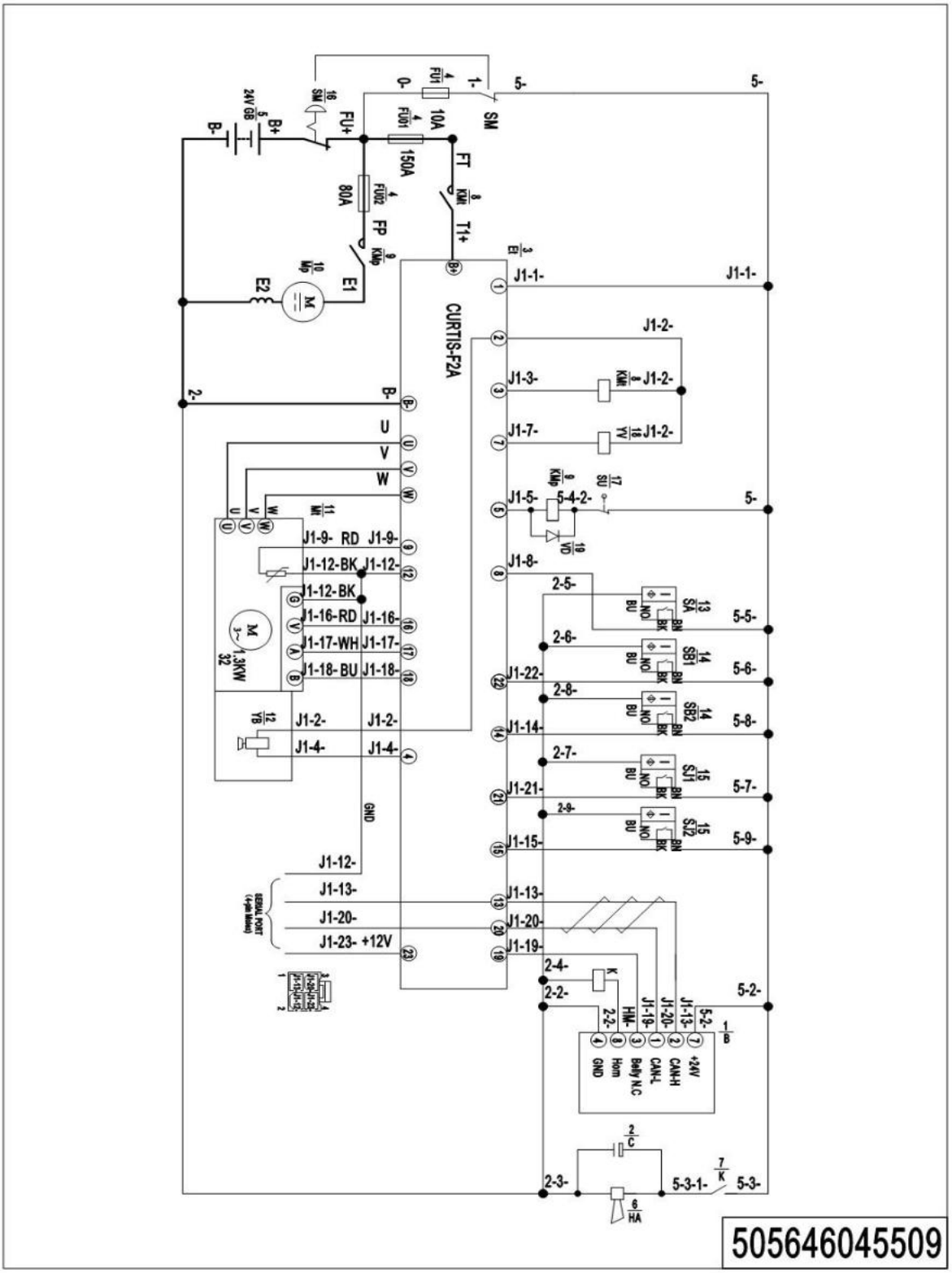

06 Electrical Circuit Diagram, EPS+Key Switch（505646045510）

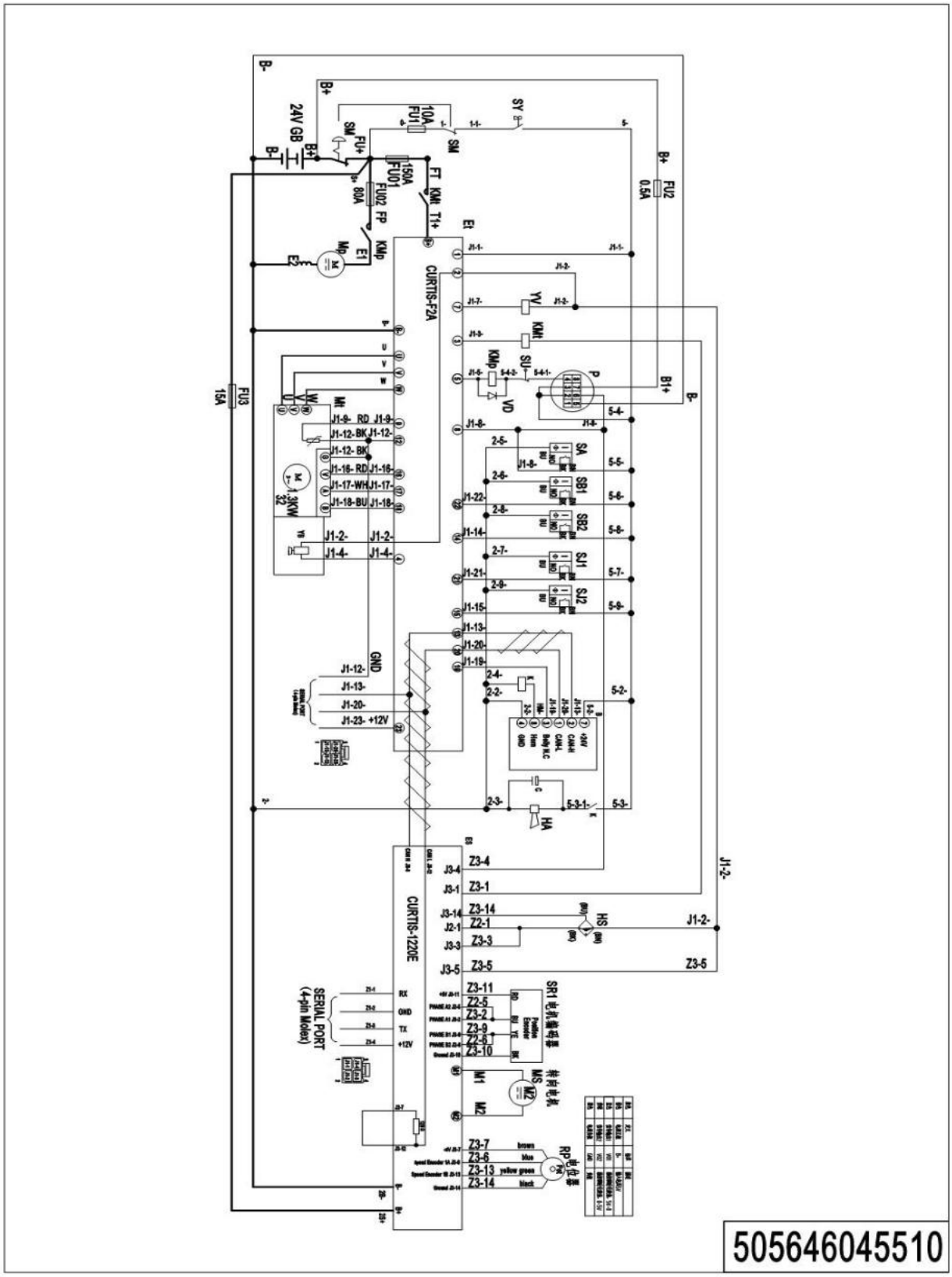

07 Electrical Circuit Diagram, EPS+ Coded Lock（505646045511）

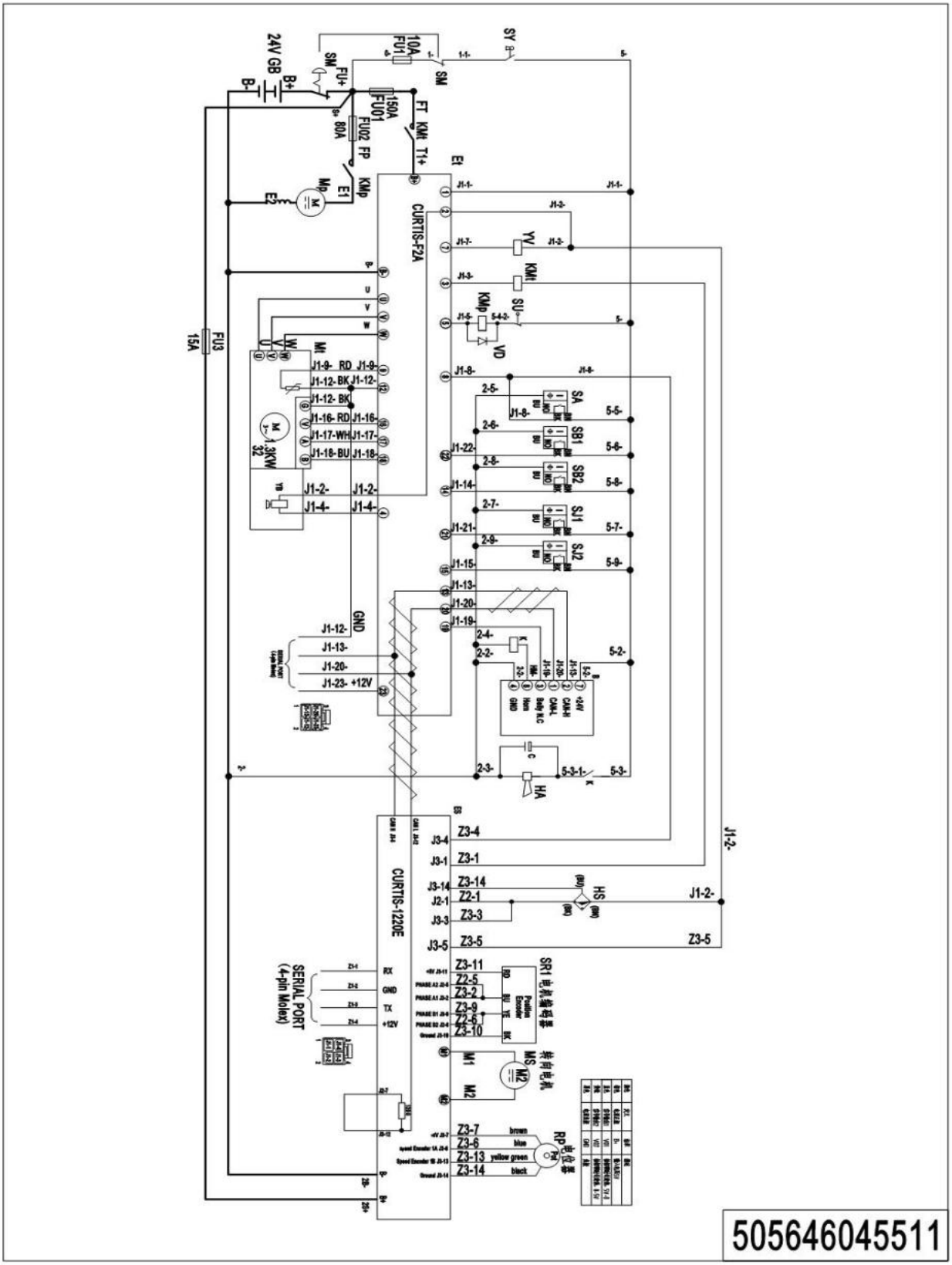

505646045511

08 Electrical Circuit Diagram, QT EPS+ Li（505646045512）

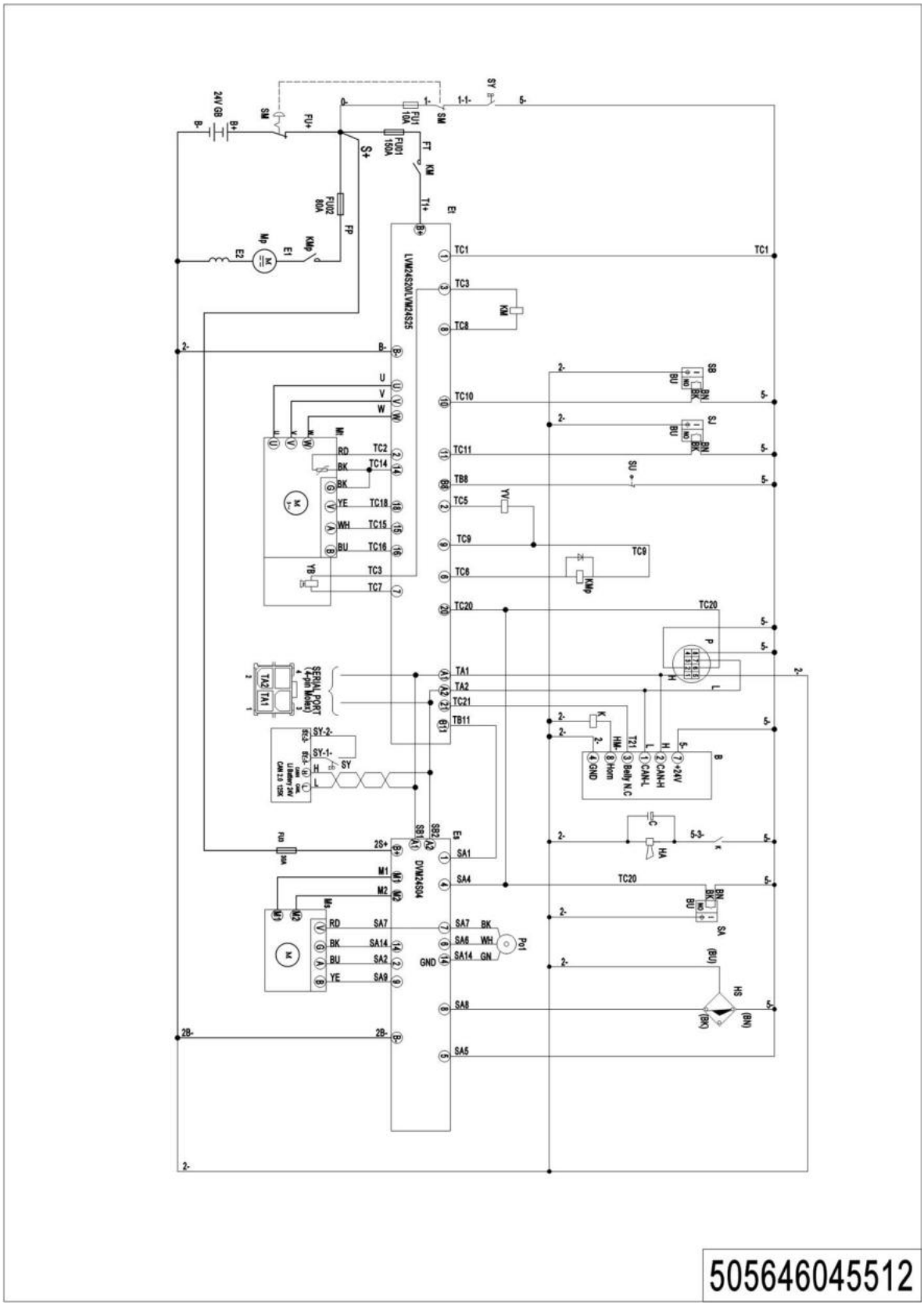

505646045512

09 Electrical Circuit Diagram, QT EPS+Lead-acid（505646045513）

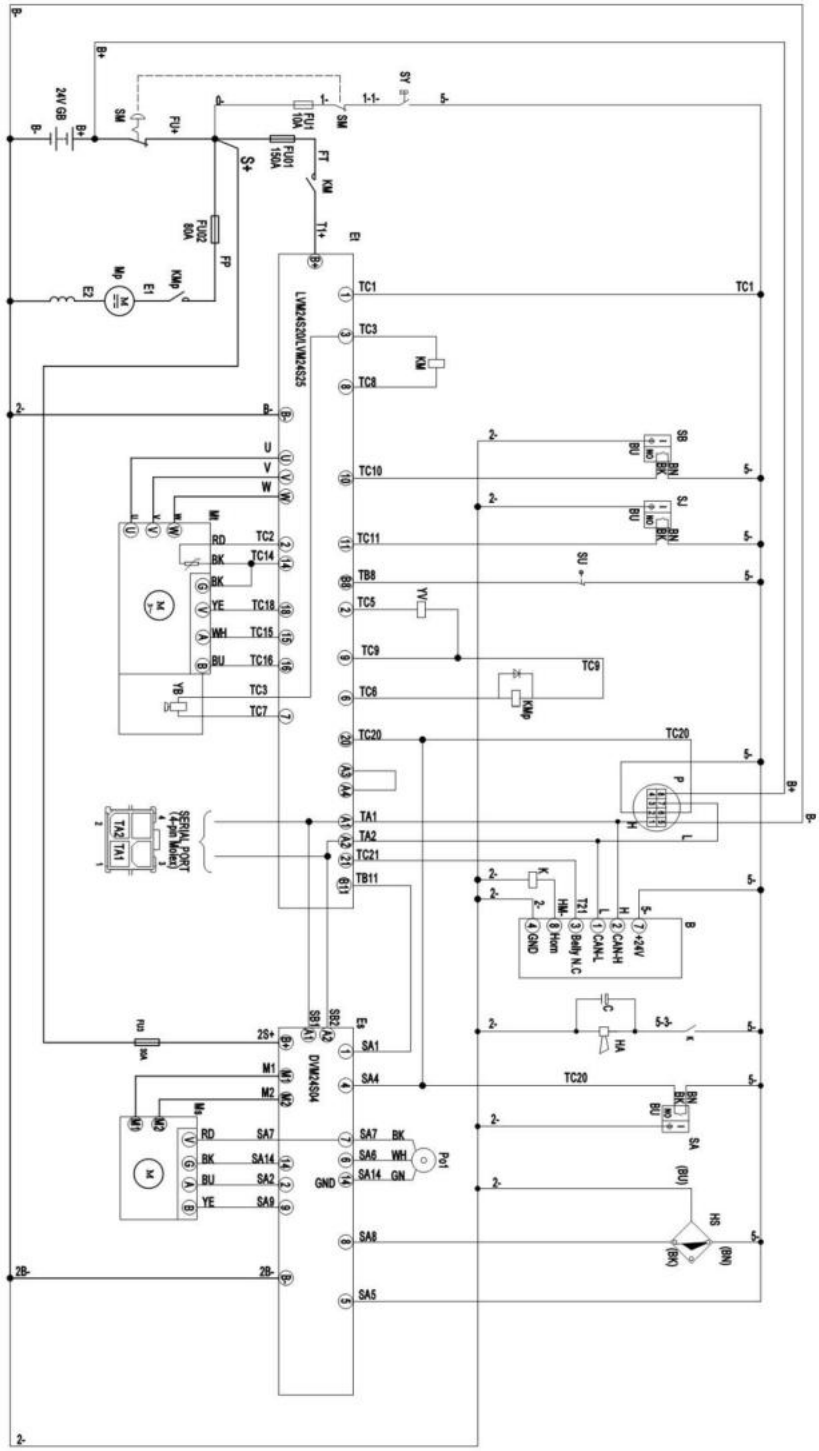

505646045513

10 Electrical Circuit Diagram, QT+Li（505646045514）

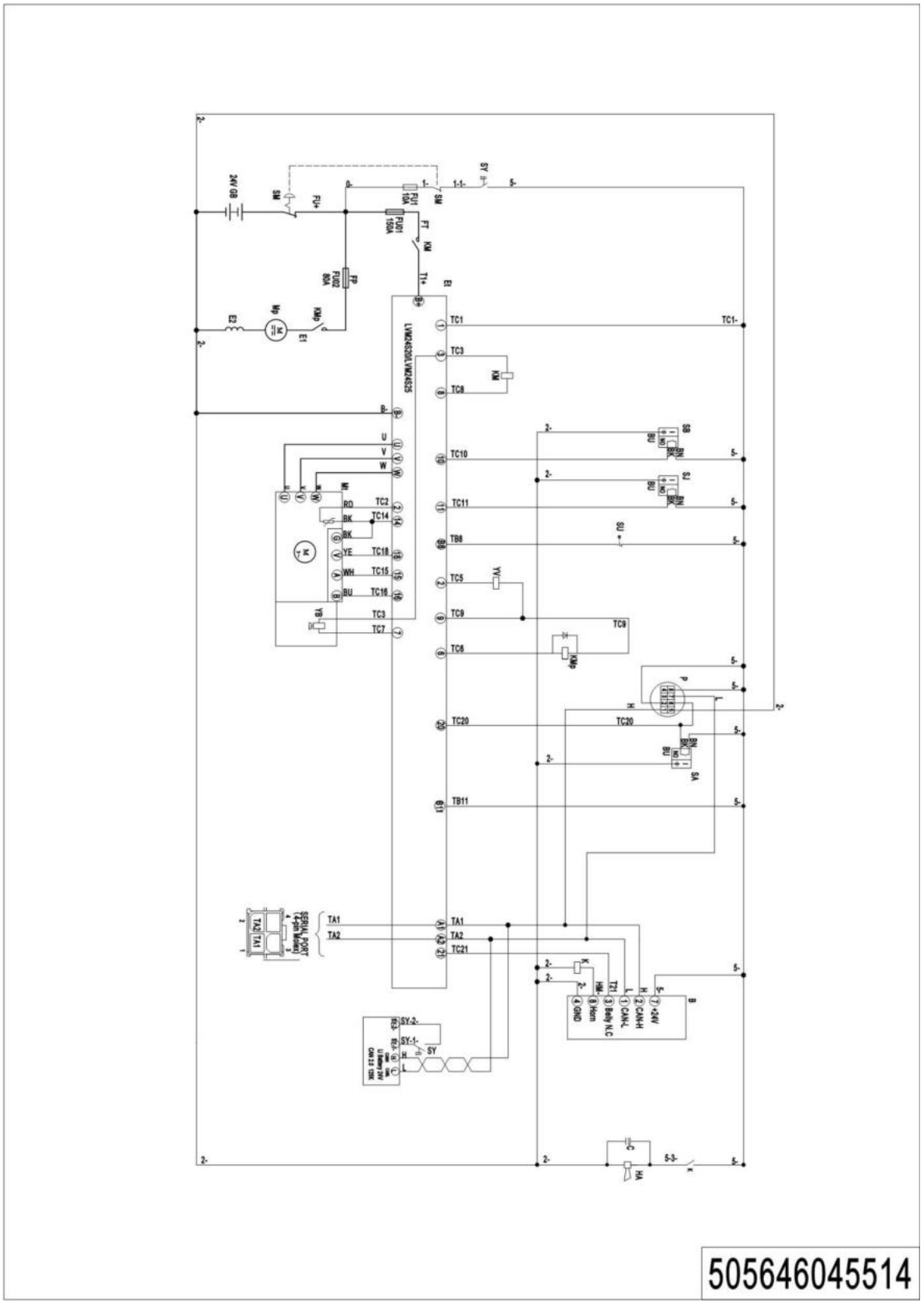

505646045514

11 Electrical Circuit Diagram, QT+Lead-acid（505646045515）

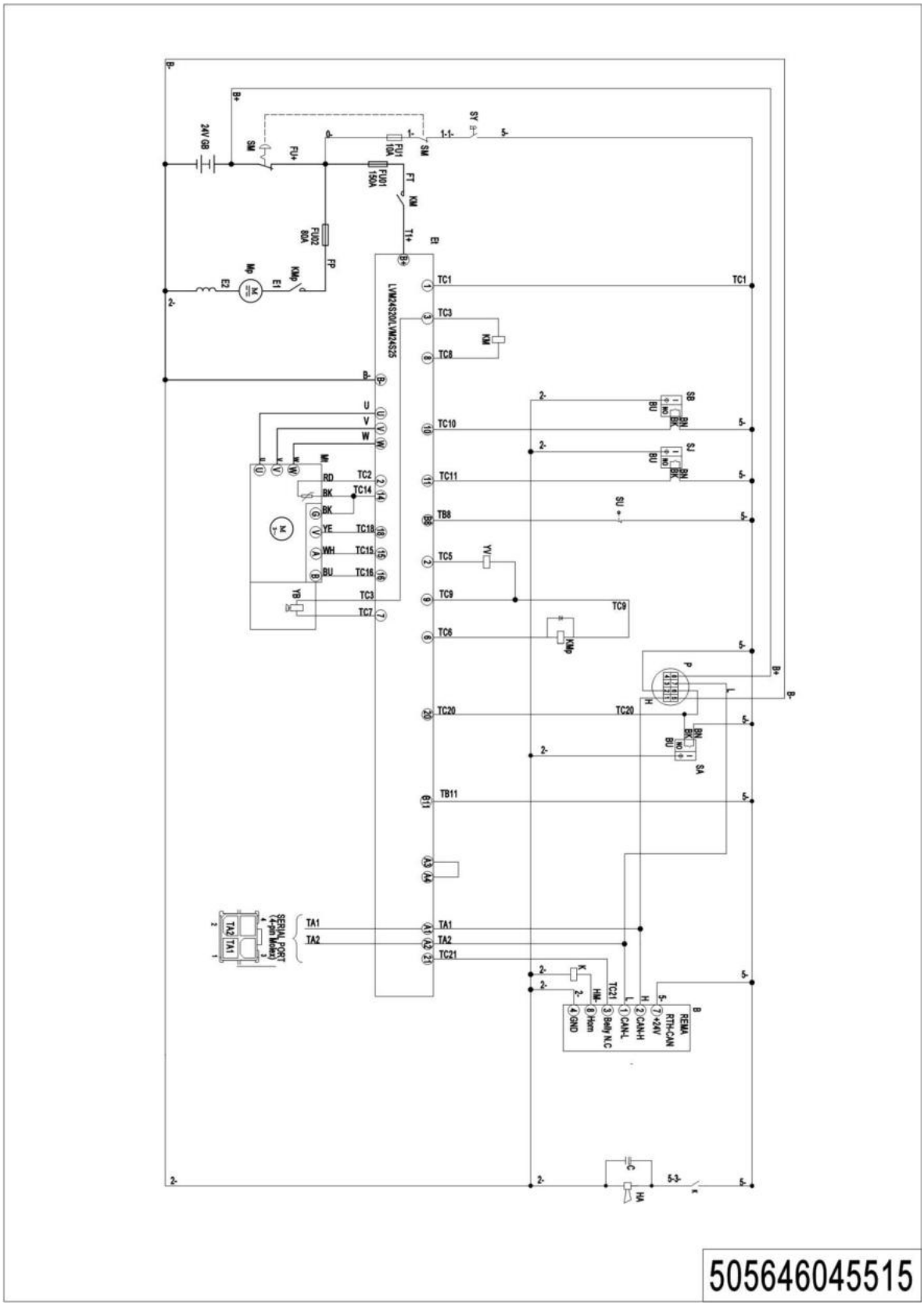

12 Electrical Circuit Diagram, QT+Key Switch+Li（505646045516）

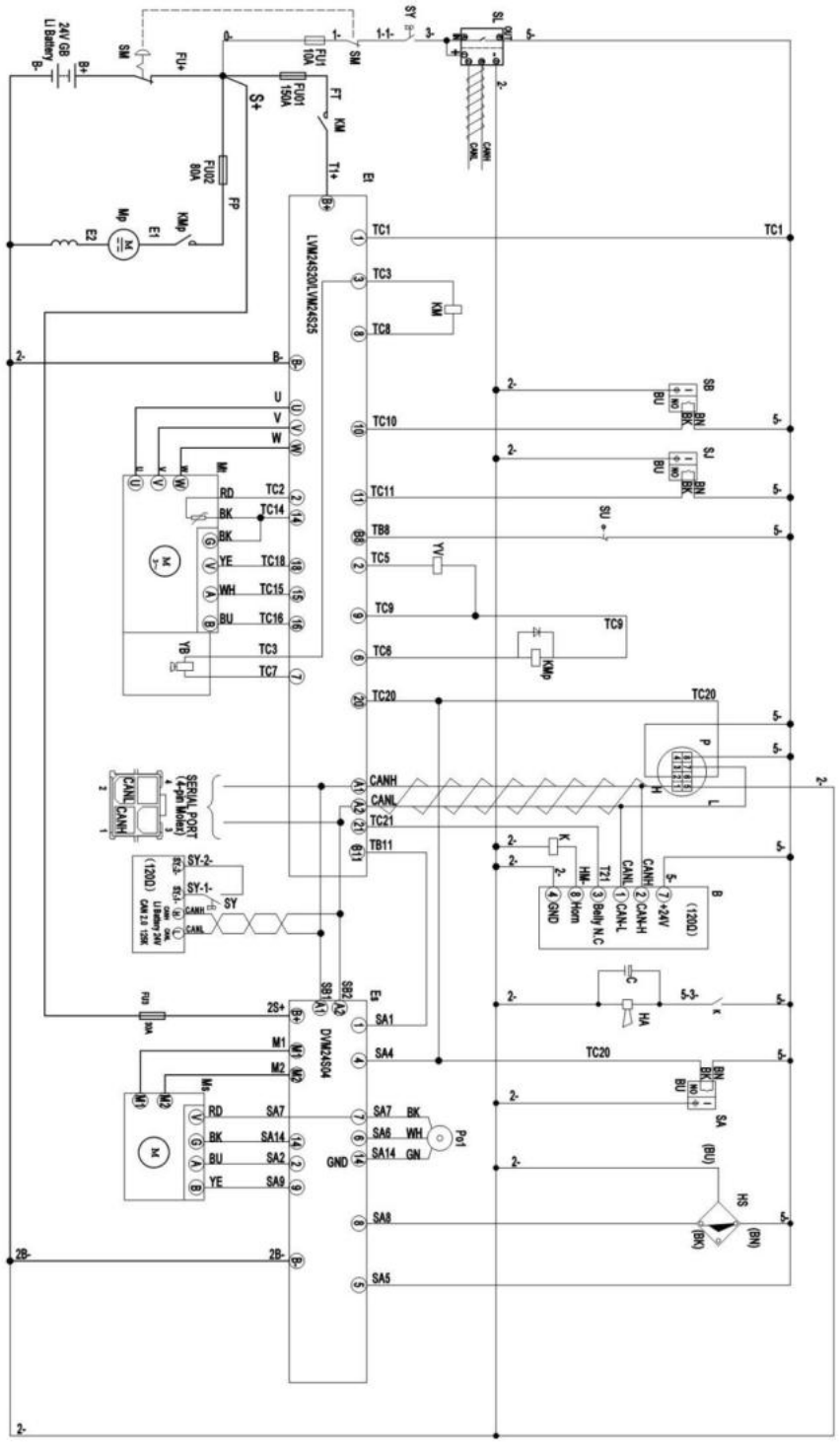

505646045516

13 Consumable Parts List

No.	Item Code	Item Description	Qty.	Chapter/ Section/ Number
1	910800100095	O-Ring	2	Chapter 1/02/15
2	910700200041	Bearing	2	Chapter 1/03/3.02 Chapter 1/04/31
3	910700600040	Bearing	1	Chapter 1/04/26
4	961000300001	Wheel Φ230x75	1	Chapter 1/04/29
5	910800100095	O-Ring	2	Chapter 1/04/37
6	910700600042	Bearing	2	Chapter 1/04/37
7	505698510005	Seal Kit	1	Chapter 2/01/14.01
8	940500100019	Bushing	2	Chapter 2/01/16Chapter 4/01/9Chapter
8				Chapter 4/03/9
9	505698520052	O-Ring	1	Chapter 2/02/21
10	505698520053	O-Ring	1	Chapter 2/02/22
11	940500100017	Bushing	4	Chapter 3/01/9
12	940500100027	Bushing	2	Chapter 4/01/8Chapter 4/02/8Chapter
13	940500100032	Bushing	2	Chapter 4/01/10Chapter 4/02/10Chapter
14	940500100012	Bushing	4	Chapter 4/01/16Chapter 4/02/16Chapter
14				Chapter 5/05/4Chapter 5/06/4
15	910700200017	Bearing	10	Chapter 4/02continuation/32.04
16	940500200002	Bushing	2	Chapter 5/01/8
17	940500200003	Bushing	2	Chapter 5/05/6
18	940300300010	Wheel Φ84x84	4	Chapter 5/05/10.01
19	910700200019	Bearing	8	Chapter 5/05/10.02Chapter 5/06/6.02
19				Chapter 5/07/18.02
20	940300300006	Wheel Φ82x110	2	Chapter 5/06/6.01
21	910700500002	Bearing	2	Chapter 5/07/6
22	940500100002	Bushing	4	Chapter 5/07/13
23	940300300018	Wheel Φ100x40	1	Chapter 5/07/18.01
24	920100200002	Fuse	1	Chapter 6/04/3
25	920100100004	Fuse	1	Chapter 6/04/4
26	920100100007	Fuse	1	Chapter 6/04/5
27	920100200003	Fuse	1	Chapter 6/05/12

1= Supply as package. 2= Supply with constraints. 3= Phasing-out supply. 4= Supply as assembly. 5= Check other tables.

No.	Item Code	Item Description	Qty.	Chapter/ Section/ Number
28	920100200013	Fuse	1	Chapter 6/05/12
29	940400100006	Air Spring	1	Chapter 7/03/4
30	940400100039	Air Spring	1	Chapter 7/04/6

1= Supply as package. 2= Supply with constraints. 3= Phasing-out supply. 4= Supply as assembly. 5= Check other tables.