Electric Pallet Truck PT20/25/30H PT20HPLUS

PARTS MANUAL

507046010101

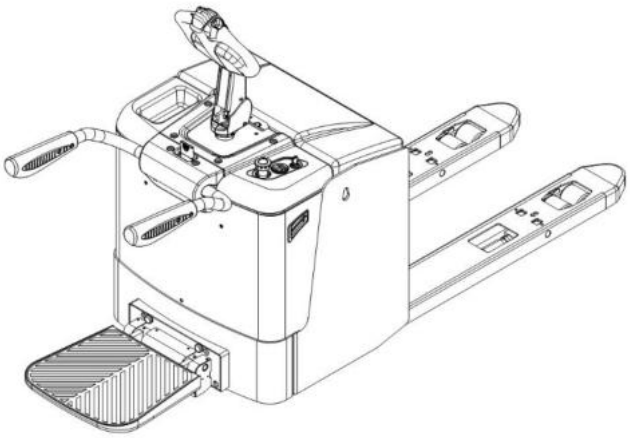

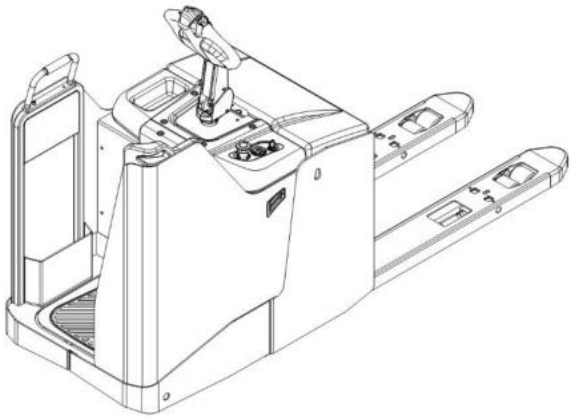

Version：V01

ruck Identification Number From：

Parts Manual PT20/25/30H PT20HPLUS -PM01CN

Please order parts from authorized dealers of Noblelift Intelligent Equipment Co., LTD.

In order to avoid wrong delivery, all the orders for spare parts should specify the following items:

- Truck model, identification number and manufacture year.
- Orders for spare parts of mast, hydraulic transmission unit, steering axle, motor, etc. shall indicate the manufacture number of these parts.
- Codes for Noblelift spare parts are shown in the table of parts manual. Please also pay attention to the description of supply status, order quantity, etc. (check the number listed in "Mark" column of the parts manual).

"Mark" Column:

The unmarked indicates the parts are in short supply cycle.

Number 1: supply as package. Indicating these that parts are small parts and seal parts, which are supplied in package unit and in short supply cycle.

Number 2: supply with constraints. Indicating that these spare parts are not in stock and will be prepared for production after receiving the order from customers, which are in long supply cycle.

Number 3: phasing-out supply. Indicating that these parts will be replaced by new parts due to technical improvements and the current stock will not be available when these parts run out. Please check the description of technical improvements notice.

Number 4: supply as assembly. Indicating that these parts are assembly parts defined by manufacture process, which cannot be supplied as a single part.

Number 5: check other tables.

This parts manual is the property of Noblelift and can be shared under the confidential agreement only, Noblelift has the right to claim for compensation of any unauthorized use. Copy without permission is not allowed. Figures in the manual are not limited by the original design. Noblelift Intelligent Equipment Co., LTD reserves the right to improve the products for continuous technology progress.

Table of Contents

Chapter 1: Drive System 6
01 Drive Unit (507046013501) 6
02 Drive Steering Assembly (507046013502) 8
03 Electronic Steering Assembly (505646031501) 10
Chapter 2: Hydraulic System 12
01 Hydraulic System (507046024001) 12
02 PT30H Hydraulic System (507046024002) 14
03 Hydraulic Power Unit (506946024002) 16
Chapter 3: Truck Frame 18
01 Truck Body (507046021501) 18
01 Truck Body (507046021501) Continuation 20
02 Truck Body (507046021502) 22
02 Truck Body (507046021502) Continuation 1 24
02 Truck Body (507046021502) Continuation 2 26
03 Fork lift assembly (507046038501) 28
03 Fork lift assembly (507046038501) Continuation 30
04 Protective arm (507046017501) 32
05 Pedals (507046018001) 34
05 Pedals (507046018001) Continuation 36
06 Bib Pedal (507046018002) 38
Chapter 4: Steering System, Braking System, Wheels 40
01 Tiller assembly (535946011001) 40
02 Tiller (535946011002) 42
03 Tiller（505646011002） 44
04 Balance Wheel Assembly (507046016501) 46
Chapter 5: Electrical Parts 48
01 Display Assembly (507046010001) 48
02 Chargers (507046036501) 50
03 Lithium battery (507046037001) 52
04 Electronic Control Unit (507046033001) 54
05 Electrical wiring harness (507046033002) 56
Chapter 7: Others 58
01 Labels and Decals (507046047003) 58
Appendix 60
01 Electrical Circuit Diagram,PT20H Curtis(507046045501) 60
02 Electrical Circuit Diagram,PT20H QT (507046045502) 61
03 Electrical Circuit Diagram,PT20HPLUS Curtis(507046045503) 62
04 Electrical Circuit Diagram,PT20HPLUS QT（507046045504） 63
05 Electrical Circuit Diagram,PT20HPLUS Curtis Manual（507046045505） 64
06 Electrical Circuit Diagram,PT20HPLUS QT .,Manual（507046045506） 65
07 Electrical Circuit Diagram,PT25H Curtis（507046045507） 66
08 Electrical Circuit Diagram,PT25H QT（507046045508） 67

09 Electrical Circuit Diagram,PT30H Curtis（507046045509）.....68
10 Electrical Circuit Diagram,PT30H QT（507046045510）.....69
11 Hydraulic schematic (507046045511) 70
12 Consumable Parts List.....71

Chapter 1: Drive System

01 Drive Unit (507046013501)

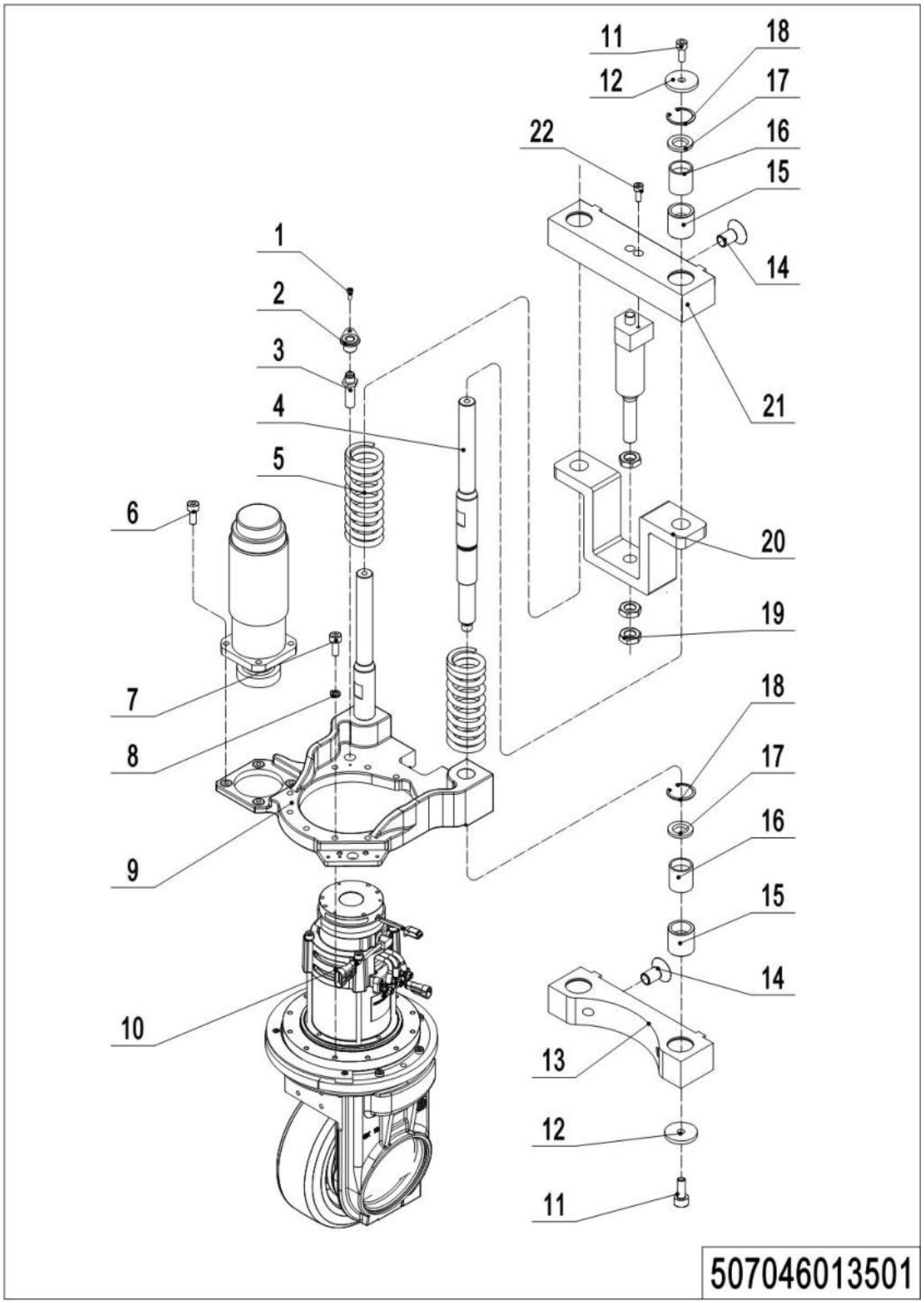

1=Supply as package; 2=Supply with limit; 3=Phasing out supply; 4=Supply as assembly; 5=Check other lists.

01 Drive Unit (507046013501)

No.	Item Code	Mark	Item Description	Qty.	Substitute	Note
1	9102002000	1	Screw	1		
2	5332135100	2	Bushing	1		
3	5057335100		Proximity Switch	1		
4	5378135200	2	Guide Rail	2		
5	5070135200	2	Spring	2		
6	9102002000	1	Screw	4		
7	9102002000	1	Screw	9		
8	9104005000	1	Spring Washer	9		
9	5070135200	2	Driving Wheel seat	1		
10	9409005000	2	Drive Steering Assembly	1		**PT20H**
10	9409005000	2	Drive Steering Assembly	1		**PT20H PLUS**
10	9409005000	2	Drive Steering Assembly	1		**PT 25/30H**
11	9102002000	1	Screw	4		
12	5378135200		Washer	1		
13	5378135200	2	Fixing Plate	1		
14	9102004000	1	Screw	6		
15	5378135200		Mounting Base	4		
16	5378135200		Bushing	4		
17	5378135200		Check Ring	4		
18	9104014000	1	Circlip	4		
19	9103004000	1	Nut	3		
20	5070135200	2	Pressure Plate	1		
21	5070135200	2	Fixing Plate	1		
22	9102002000	1	Screw	1		

1=Supply as package; 2=Supply with limit; 3=Phasing out supply; 4=Supply as assembly; 5=Check other lists.

02 Drive Steering Assembly (507046013502)

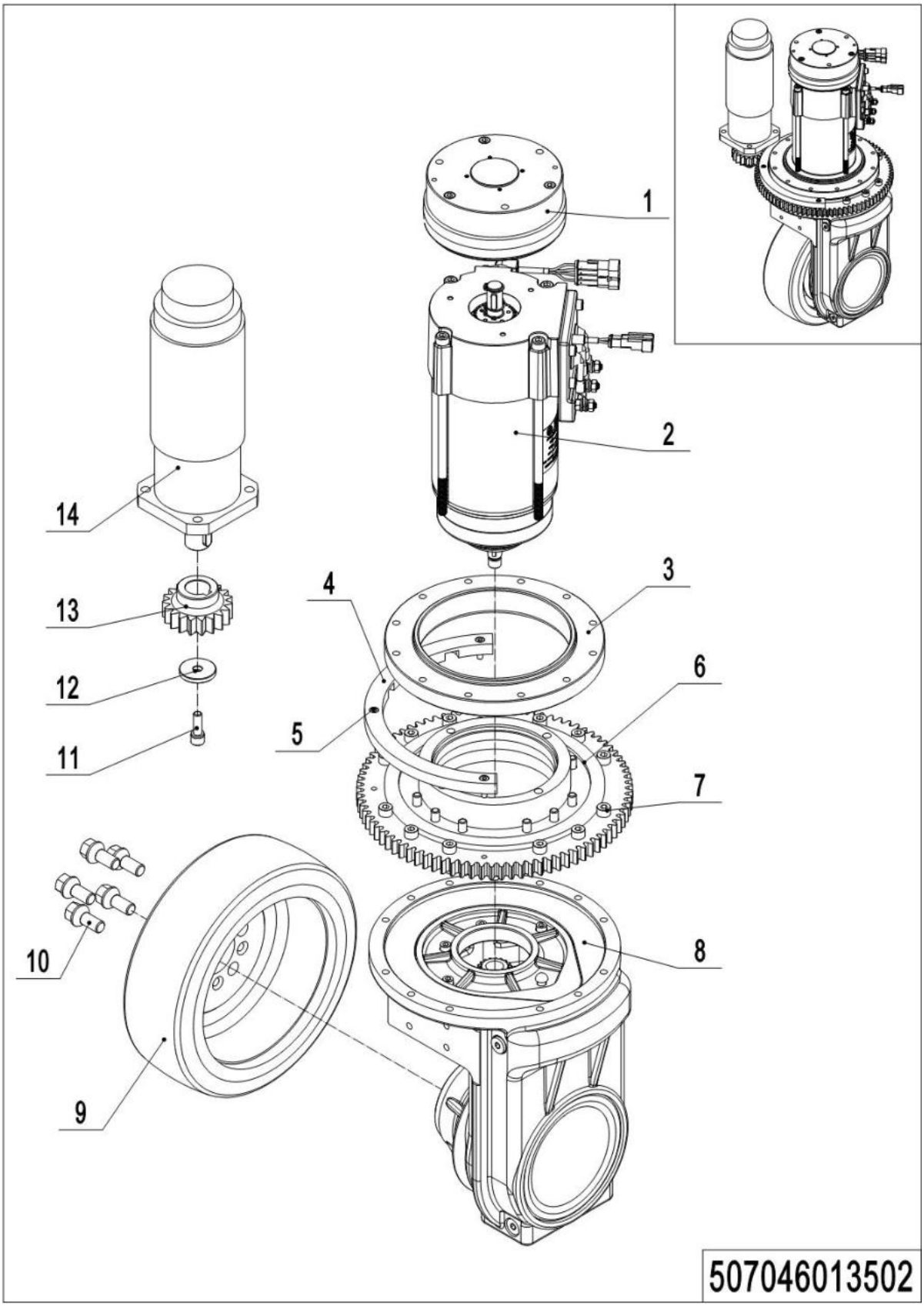

1=Supply as package; 2=Supply with limit; 3=Phasing out supply; 4=Supply as assembly; 5=Check other lists.

02 Drive Steering Assembly (507046013502)

No.	Item Code	Mark	Item Description	Qty.	Substitute	Note
1	9610015000	2	Brake	1		
2	9610028000	2	AC motor 1.8KW	1		**PT20H**
2	9610015000	2	AC motor 2.5KW	1		**PT20HPLUS、**
3	5378135200	2	Guide Rail	1		
4	9610015000	2	Sensing strip	1		
5	9411004000	2	Screw	3		M5x16
6	9610015000	2	Slewing bearing	1		
7	9102002001	2	Screw	25		
8	9610021010	2	Gearbox Assemblyi=17.43	1		**PT20H、**
8	9610015010	2	Gearbox Assemblyi=22.39	1		**PT25/30H**
9	9610015000	2	Driving wheel	1		Φ250x80
10	9409985200	2	Screw	5		
11	9104005000	2	Spring Washer	1		
12	9610015000	2	Axle collar	1		
13	9610015000	2	Steering Pinion	1		
14	9209001000	2	Motor	1		

03 Electronic Steering Assembly (505646031501)

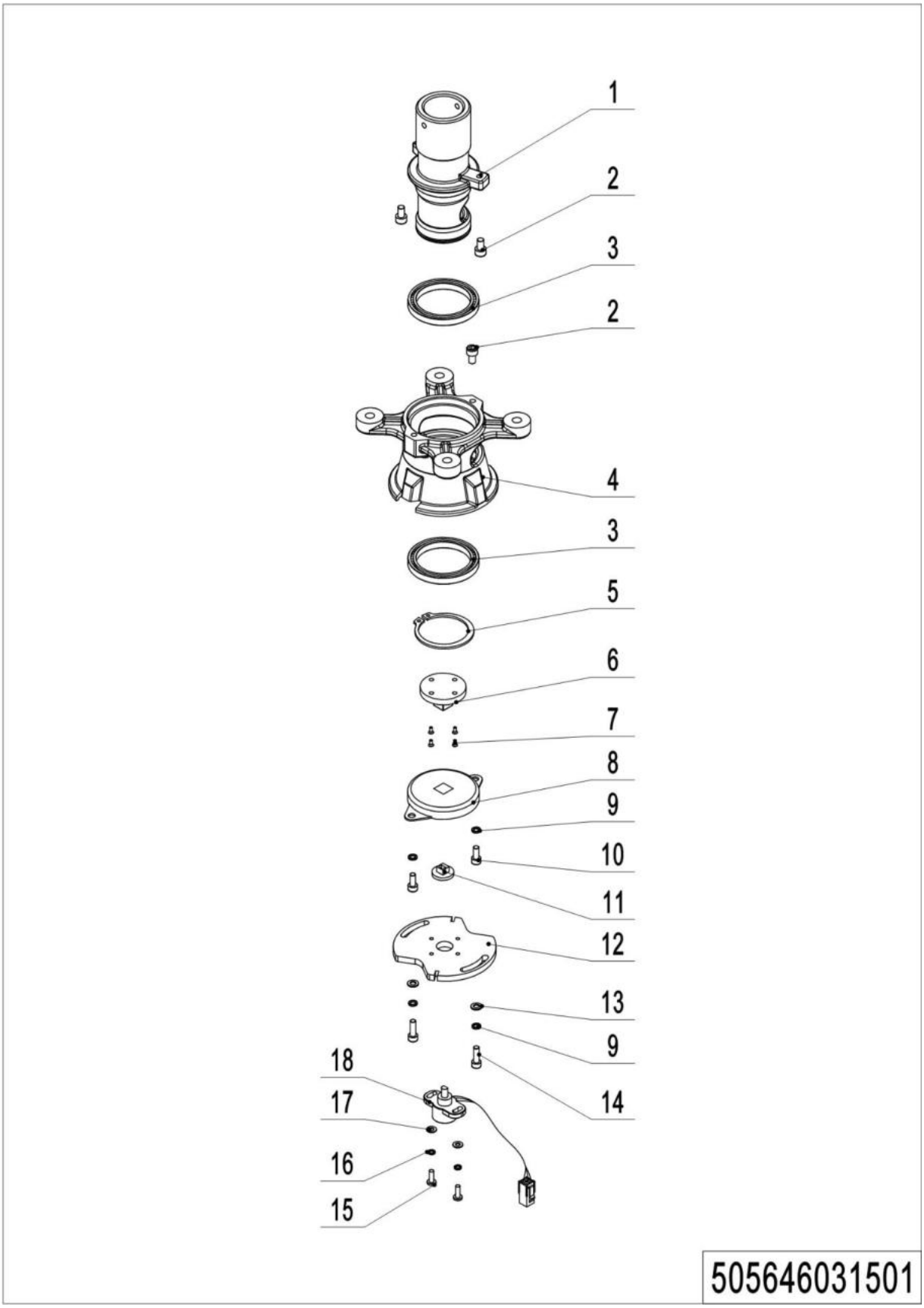

1=Supply as package; 2=Supply with limit; 3=Phasing out supply; 4=Supply as assembly; 5=Check other lists.

03 Electronic Steering Assembly (505646031501)

No.	Item Code	Mark	Item Description	Qty.	Substitute	Note
1	5056315200		Shft seat	1		
2	9107002000		Bearing	2		
3	9102002000		Screw	3		
4	5056315200		Fixing Base	1		
5	9104013000		Circlip	1		
6	5056315200		Link Block	1		
7	9102002000		Screw	4		
8	9408012000		Rotary Damper	1		
9	9104005000		Spring Washer	4		
10	9102002000		Screw	2		
11	5056315200		Link Block	1		
12	5057315200		Fixing Plate	1		
13	9104001000		Flat Washer	2		
14	9102002000		Screw	2		
15	9102005000		Screw	2		
16	9104005000		Spring Washer	2		
17	9104001000		Flat Washer	2		
18	5056330100		Potentiometer	1		

Chapter 2: Hydraulic System

01 Hydraulic System (507046024001)

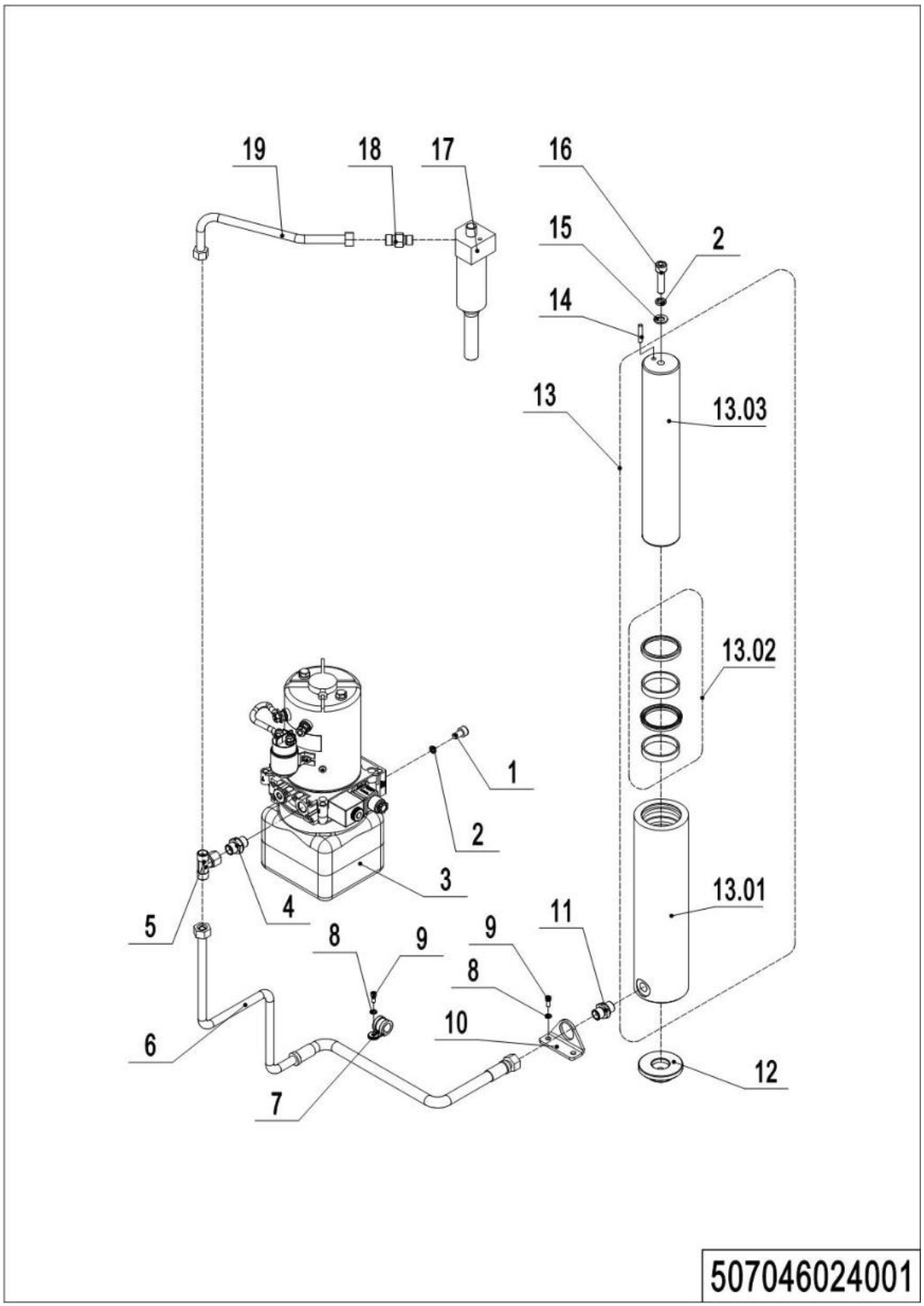

1=Supply as package; 2=Supply with limit; 3=Phasing out supply; 4=Supply as assembly; 5=Check other lists.

01 Hydraulic System (507046024001)

No.	Item Code	Mark	Item Description	Qty.	Substitute	Note
1	910200200075		Screw	2		
2	910400500007		Spring Washer	3		
3	950900100024		Pump Unit	1		见 506946024002
4	950400300007		Joint	1		
5	950400900002		Joint	1		
6	507024010001		Hydraulic Pipe	2		
7	951000100003		Hose Clamp	1		
8	910400500005		Spring Washer	4		
9	910200200033		Screw	4		
10	505621520027		Locating Rack	1		
11	950400400003		Joint	1		
12	505621520035		Cylinder Base	1		
13	505724010001		Cylinder	1		
13.01	505724010002		Cylinder Block	1		
13.02	505798510001		Seal Kit	1		
13.03	505724020003		Piston RodΦ50x308	1		
14	910600100016		Cylindrical Pin	1		
15	910400100007		Flat Washer	1		
16	910200200079		Screw	1		
17	507024010003		Cylinder	1		
18	950400400010		Joint	1		
19	201027520002		Steel Tube	1		

02 PT30H Hydraulic System (507046024002)

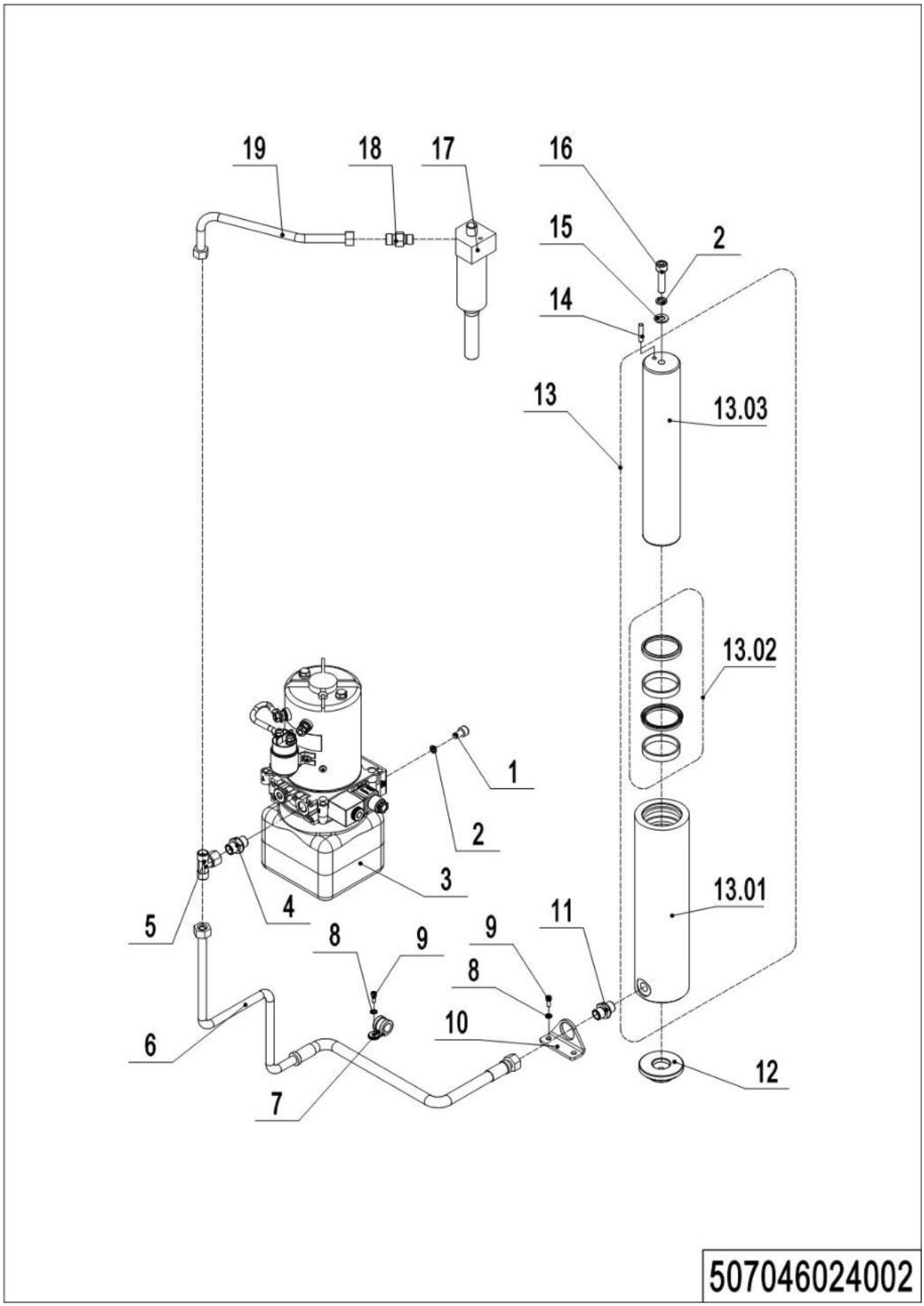

1=Supply as package; 2=Supply with limit; 3=Phasing out supply; 4=Supply as assembly; 5=Check other lists.

02 PT30H Hydraulic System (507046024002)

No.	Item Code	Mark	Item Description	Qty.	Substitute	Note
1	910200200075		Screw	2		
2	910400500007		Spring Washer	3		
3	950900100024		Pump Unit	1		见 506946024002
4	950400300007		Joint	1		
5	950400900002		Joint	1		
6	507024010001		Hydraulic Pipe	2		
7	951000100003		Hose Clamp	1		
8	910400500005		Spring Washer	4		
9	910200200033		Screw	4		
10	505621520027		Locating Rack	1		
11	950400400003		Joint	1		
12	505621520035		Cylinder Base	1		
13	506024010001		Cylinder	1		
13.01	506024010002		Cylinder Tube	1		
13.02	506098510001		Seal Kit	1		
13.03	506024020003		Piston Rod	1		
14	910600100016		Cylindrical Pin	1		
15	910400100007		Flat Washer	1		
16	910200200079		Screw	1		
17	507024010003		Cylinder	1		
18	950400400010		Joint	1		
19	201027520002		Steel Tube	1		

03 Hydraulic Power Unit (506946024002)

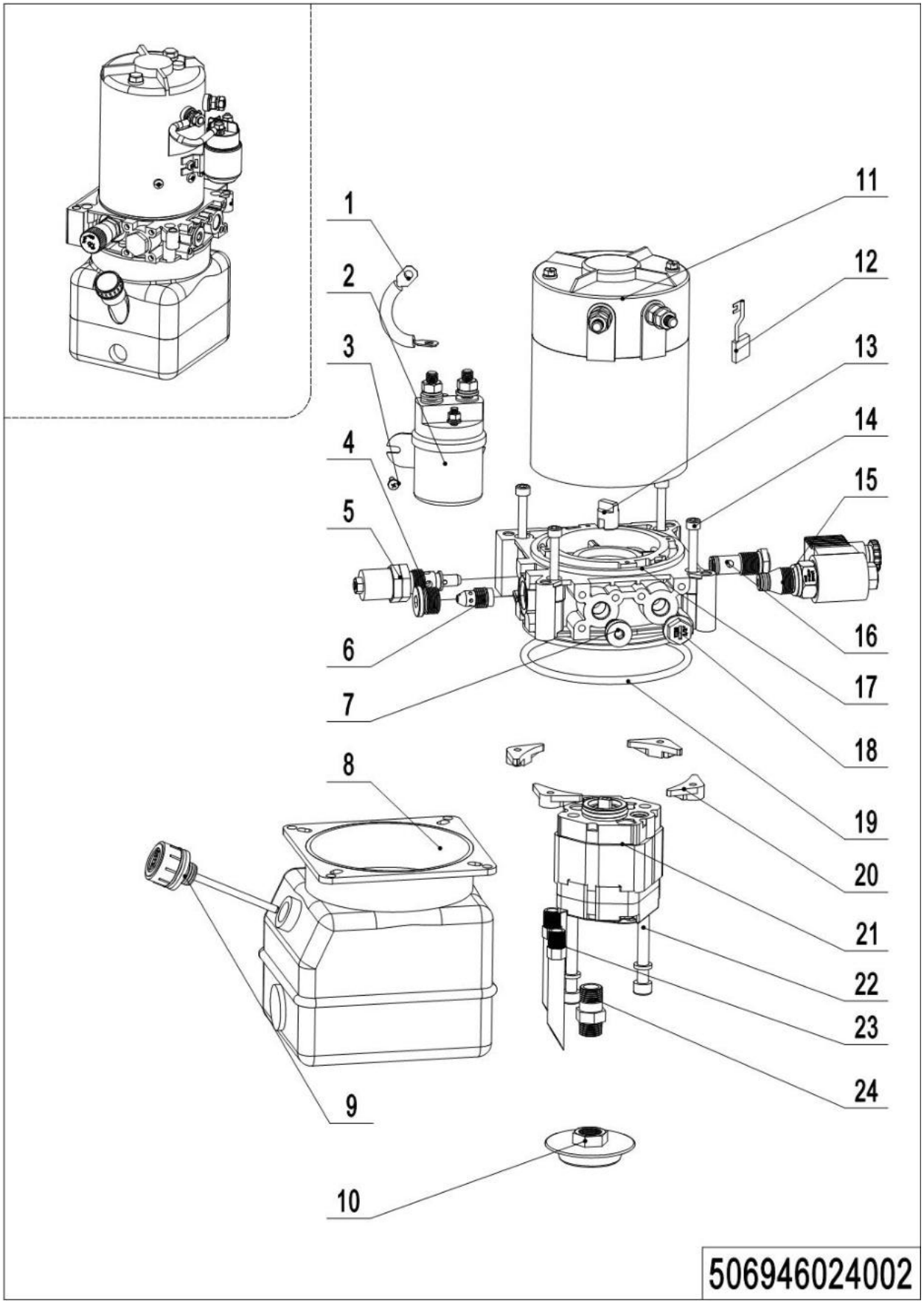

1=Supply as package; 2=Supply with limit; 3=Phasing out supply; 4=Supply as assembly; 5=Check other lists.

03 Hydraulic Power Unit (506946024002)

No.	Item Code	Mark	Item Description	Qty.	Substitute	Note
--	950900100024		Pump Unit	1		
1	505798510004	2	Cables	1		
2	532098510002	2	Switch	1		
3	910200500036	1	Screw	1		
4	402698520020	2	Plug	1		
5	505798510007	2	Overflow Valve	1		
6	505798510006	2	Compensation Valve	1		
7	505798520014	2	End Cap	1		
8	505798520009	2	Tank	1		
9	505698520047	2	Cap-Tank	1		
10	402698520010	2	Filter	1		
11	532098510001	2	Motor	1		
12	505798510013	2	Carbon Brush	1		
13	505798520018	2	Coupling	1		
14	910200200042	1	Screw	4		
15	532098510006	2	Magnetic Valve	1		
16	505798510012	2	Check Valve	1		
17	505798520005	2	Valve Block	1		
18	505798520015	2	End Cap	1		
19	910800100088	1	O-Ring	1		
20	505798520008	2	Nut	4		
21	532098510000	2	Gear Pump	1		
22	910200200070	1	Screw	2		
23	505798520012	2	Pipe	2		
24	505798520010	2	Oil Tube	1		

1=Supply as package; 2=Supply with limit; 3=Phasing out supply; 4=Supply as assembly; 5=Check other lists.

Chapter 3: Truck Frame

01 Truck Body (507046021501)

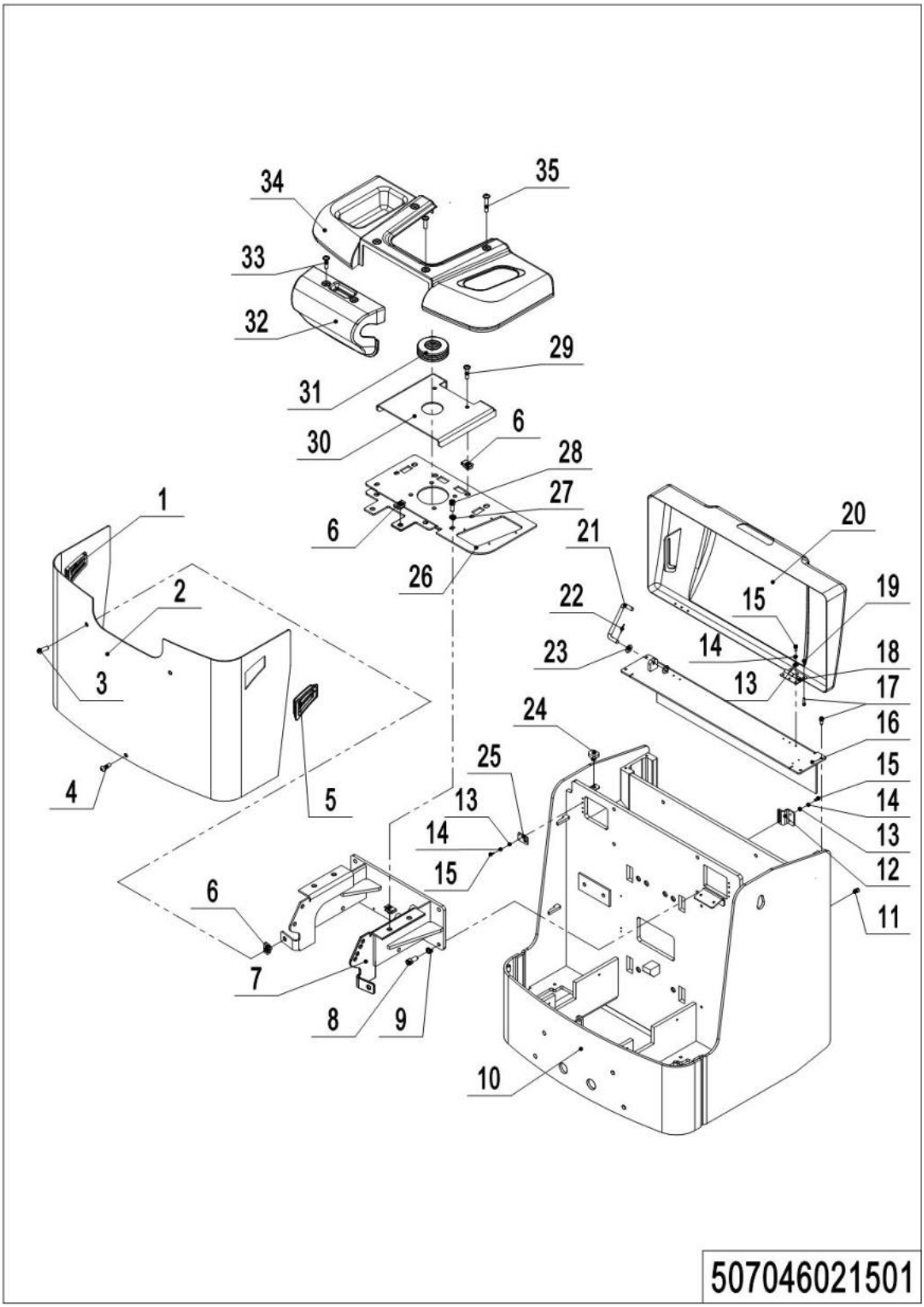

1=Supply as package; 2=Supply with limit; 3=Phasing out supply; 4=Supply as assembly; 5=Check other lists.

01 Truck Body (506746021501)

No.	Item Code	Mark	Item Description	Qty.	Substitute	Note
1	505621510003		Vent Kit	1		
2	505921510005		Apron	1		
3	941100100004		Screw	2		
4	941100100005		Screw	1		
5	505621510004		Vent Kit	1		
6	940400400003		Cage Nut	14		
7	507021510001		Mounting base welding	1		
8	910200200097	1	Screw	4		
9	910400500008	1	Spring Washer	4		
10	507021510000		Body welding (685)	1		
10	507021510004		Body welding (560)	1		
11	910200200074	1	Screw	2		
12	505721520031		Mounting Plate	1		
13	910400100004	1	Flat Washer	12		
14	910400500004	1	Spring Washer	12		
15	910200200023	1	Screw	12		
16	507021510003		Cover welding	1		
17	910200300013		Screw	10		
18	940801400001		Hinge	2		
19	910300100004	1	Nut	6		
20	507021010001		Battery Cap	1		
21	560838520036		Support Rod	1		
22	910600600030	1	Cotter Pin	4		
23	910400200004	1	Flat Washer	4		
24	505938520016		Crash Pad	2		
25	535921520029		Mounting Plate	2		
26	507021520021		Roof Plate	1		
27	910400500007	1	Spring Washer	4		
28	910200200076	1	Screw	4		

01 Truck Body (507046021501) Continuation

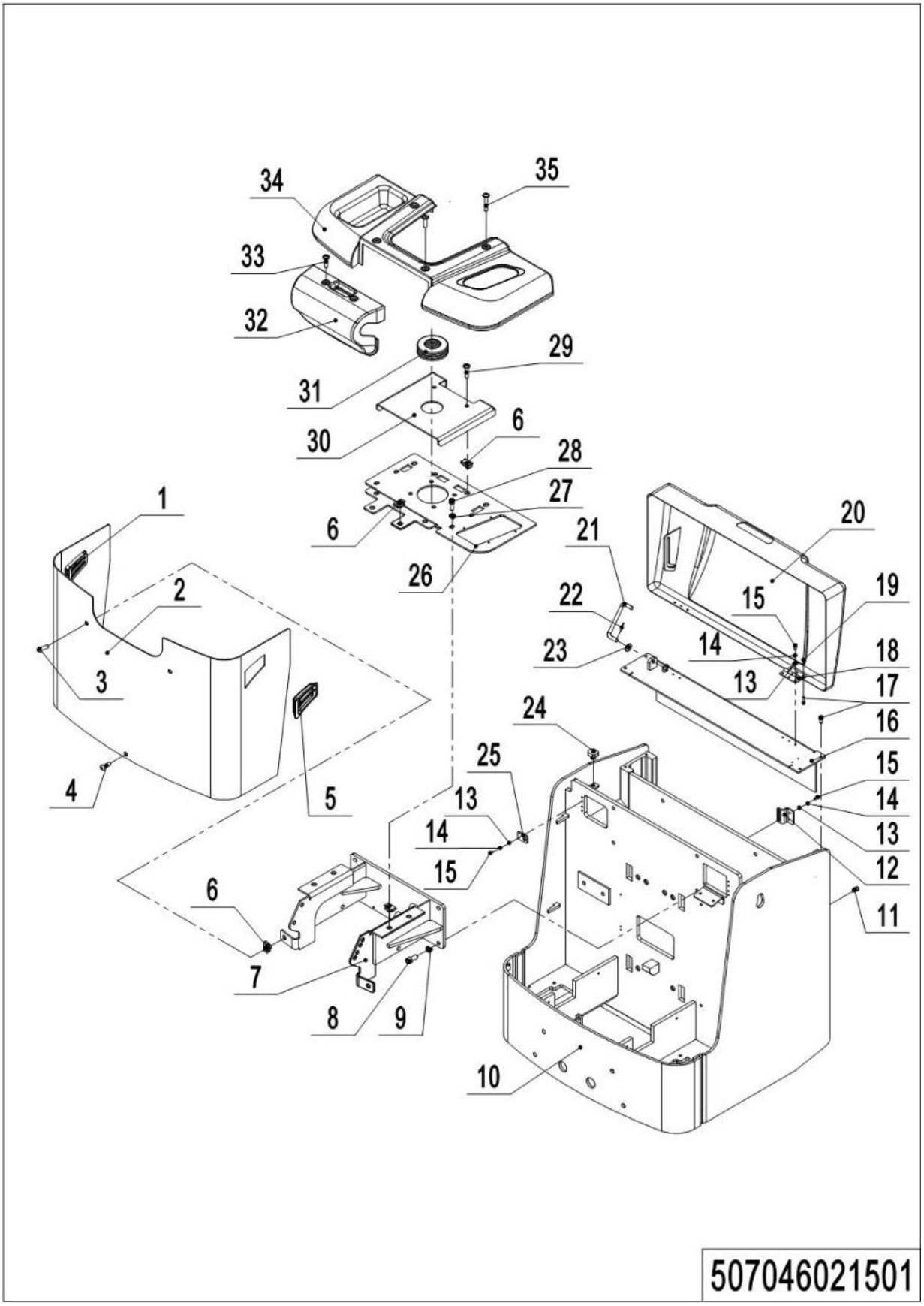

1=Supply as package; 2=Supply with limit; 3=Phasing out supply; 4=Supply as assembly; 5=Check other lists.

01 Truck Body (507046021501)续

No.	Item Code	Mark	Item Description	Qty.	Substitute	Note
29	941100100006		Screw	2		
30	507021510002		Intermediate Hood	1		
31	940600400001		Dust Cover	1		
32	505621520025		Protective Cover	1		
33	941100100003		Screw	4		
34	507021520022		Shields	1		
35	941100100002		Screw	2		

02 Truck Body (507046021502)

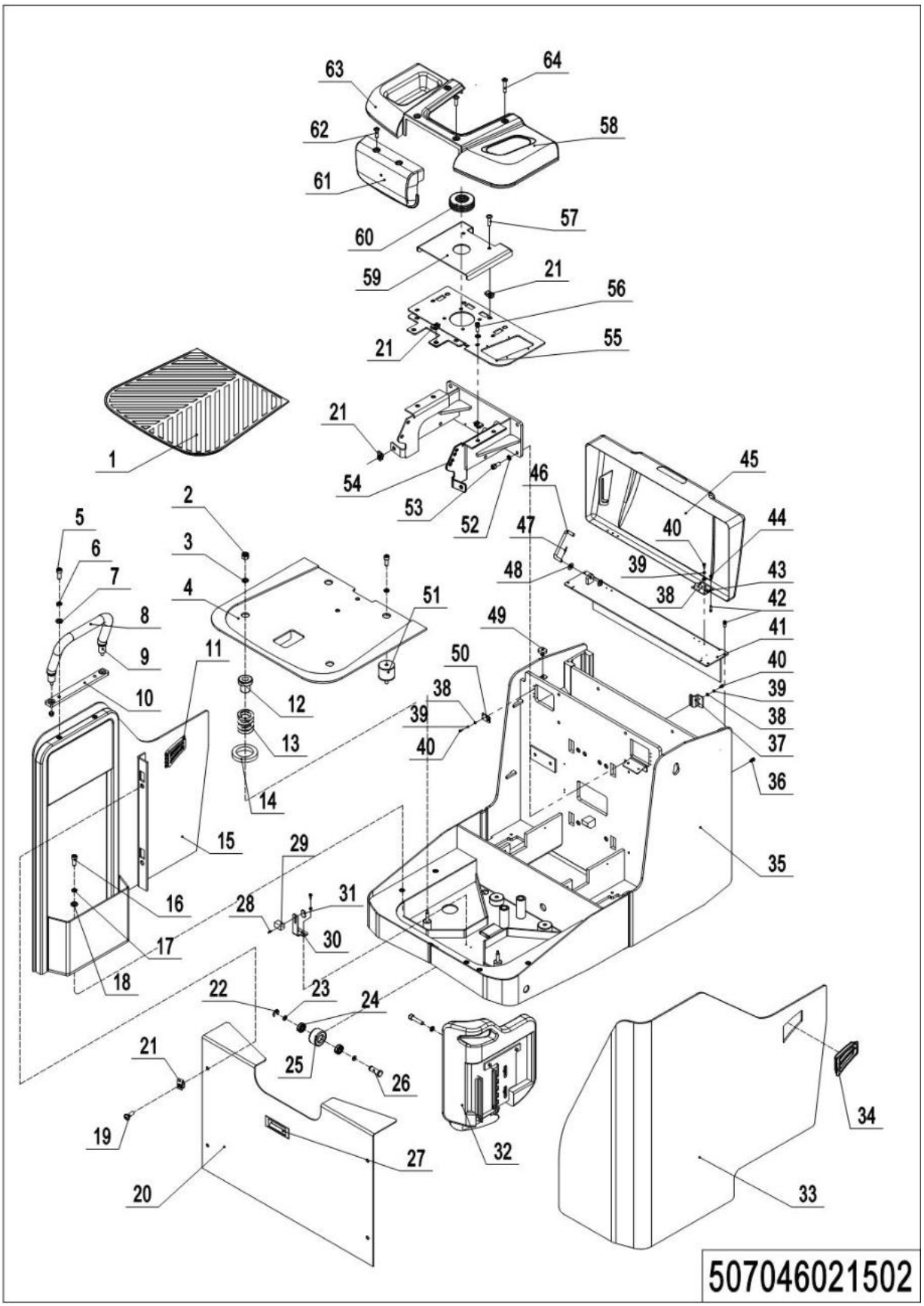

1=Supply as package; 2=Supply with limit; 3=Phasing out supply; 4=Supply as assembly; 5=Check other lists.

02 Truck Body (506746021502)

No.	Item Code	Mark	Item Description	Qty.	Substitute	Note
1	505618020018		Rubber Mat	1		
2	910300500003	1	Nut	2		
3	910400200002	1	Flat Washer	2		
4	509021510003		Platform	1		
5	910200200057	1	Screw	4		
6	910400500006	1	Spring Washer	4		
7	910400100006	1	Flat Washer	2		
8	509021520060		Jacket	1		
9	509021510007		Handrail	1		
10	509021520056		Bottom plate	1		
11	505621510003		Vent Kit	1		
12	565921520062		Crash Pad	2		
13	940400500008		Spring	2		
14	509021520047	1	Washer	2		
15	509021510004		Protection Plate	1		
16	910200200078		Screw	6		
17	910400500007	1	Spring Washer	12		
18	910400100007	1	Flat Washer	8		
19	941100100005		Screw	4		
20	505921520070		Coaming	1		
21	940400400003		Cage Nut	16		
22	910401300008		Circlip	1		
23	509021520047		Washer	2		
24	910700200018		Bearing	2		
25	505921520079		Wheel	1		
26	505921520077		Pin	1		
27	505921520070		Handle	1		
28	910200500016		Screw	2		
29	505633510002		Proximity Switch	1		

02 Truck Body (507046021502) Continuation 1

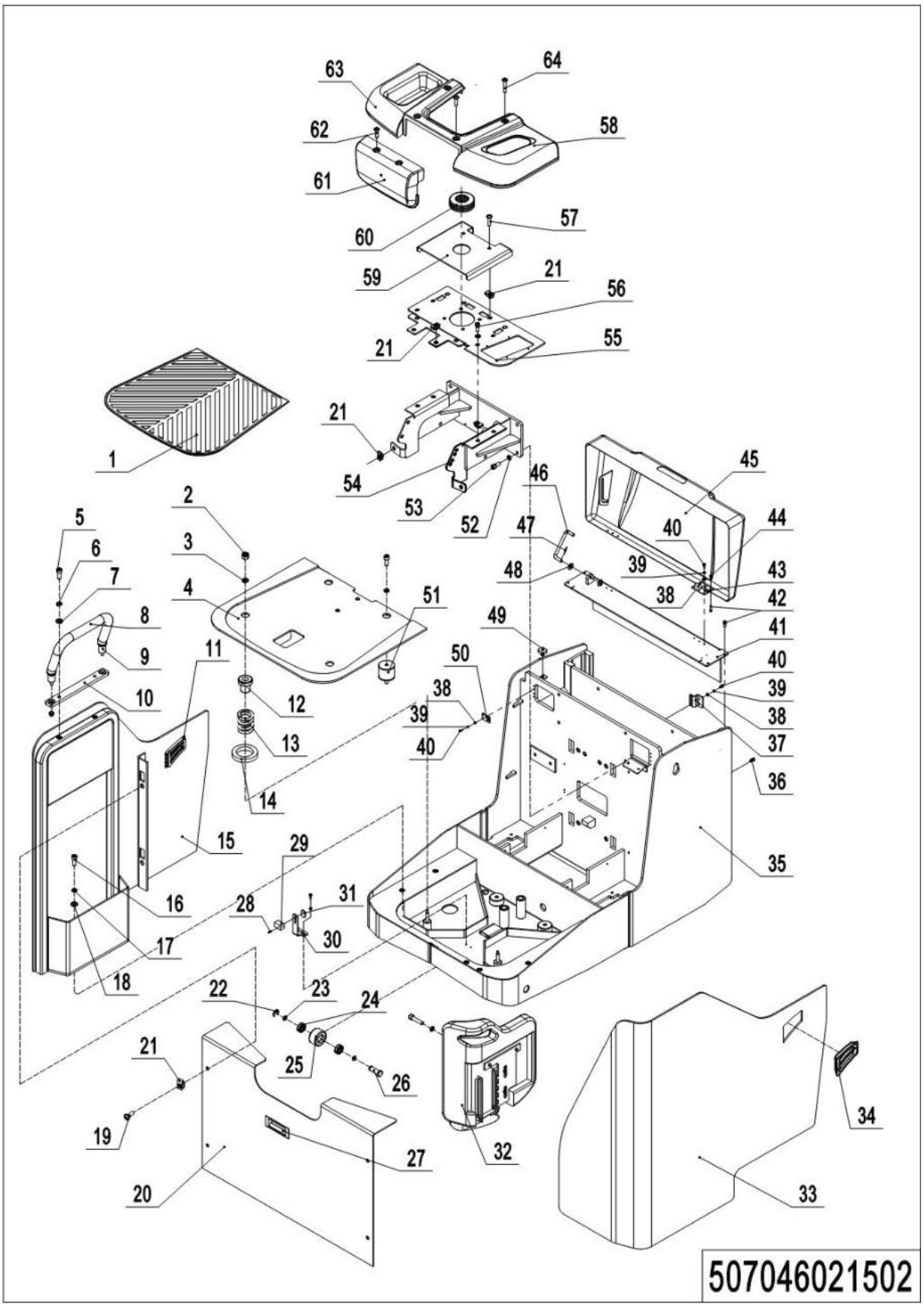

1=Supply as package; 2=Supply with limit; 3=Phasing out supply; 4=Supply as assembly; 5=Check other lists.

01 Truck Body (507046021502) Continuation 1

No.	Item Code	Mark	Item Description	Qty.	Substitute	Note
30	509021520046		Mounting Plate	1		
31	509021520054		Mounting Plate	1		
32	218021510004		Backrest	1		
33	509021510005		Protection Plate	1		
34	505621510004		Vent Kit	1		
35	507021510006		Body welding(685)	1		
35	507021510007		Body welding(560)	1		
36	910200200074	1	Screw	4		
37	505721520031		Mounting Plate	1		
38	910400100004	1	Flat Washer	12		
39	910400500004	1	Spring Washer	12		
40	910200200023	1	Screw	12		
41	507021510003		Cover welding	1		
42	910200300013		Screw	10		
43	940801400001		Hinge	2		
44	910300100004	1	Nut	6		
45	507021010001		Battery Cap	1		
46	560838520036		Support Rod	1		
47	910600600030	1	Cotter Pin	4		
48	910400200004	1	Flat Washer	4		
49	505938520016		Crash Pad	2		
50	535921520029		Mounting Plate	2		
51	566518020088		Shock Absorber	2		
52	910400500008	1	Spring Washer	4		
53	910200200097	1	Screw	4		
54	507021510001		Mounting base welding	1		
55	507021520021		Roof Plate	1		
56	910400500007	1	Spring Washer	4		
57	910200200076	1	Screw	4		

02 Truck Body (507046021502) Continuation 2

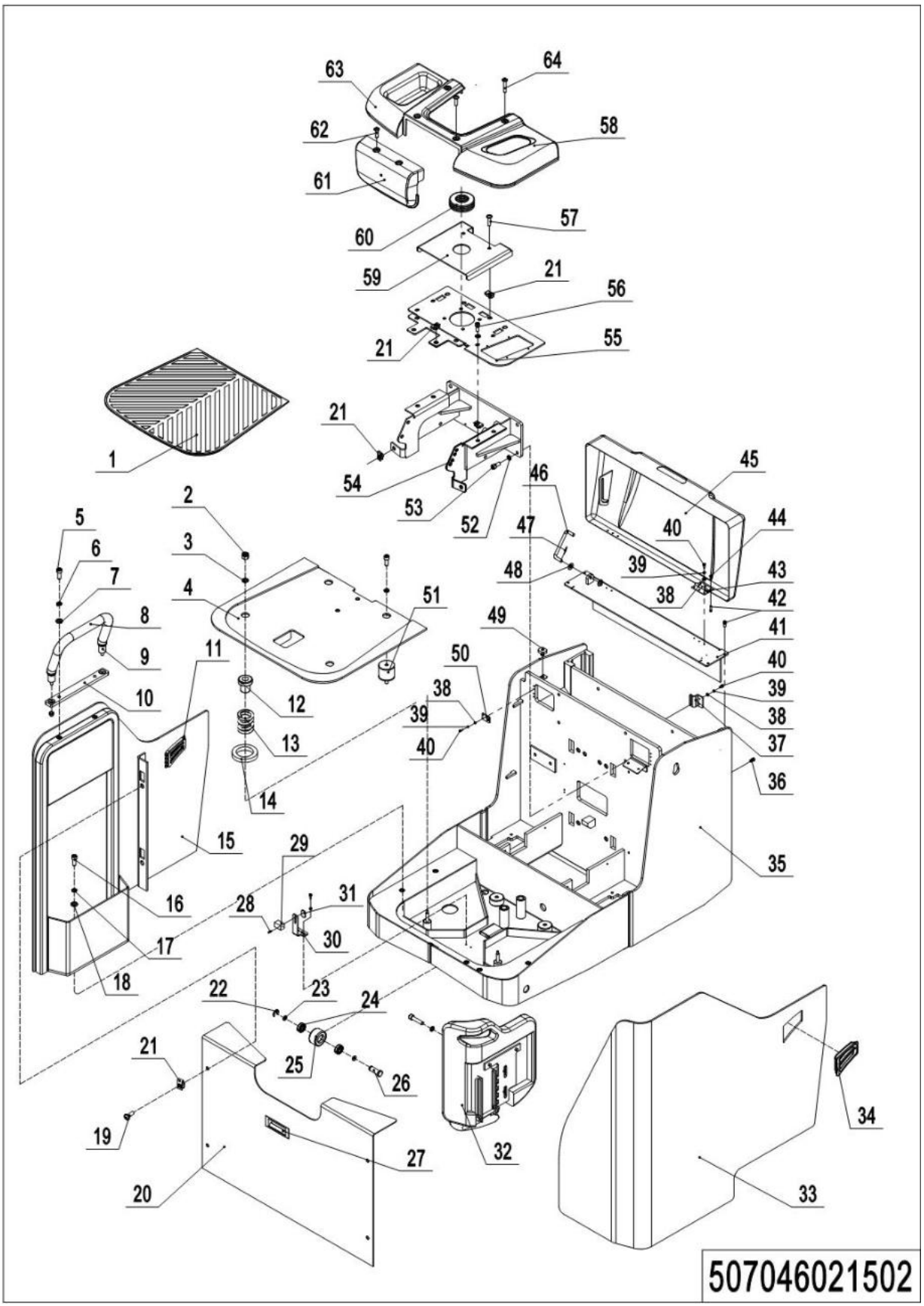

1=Supply as package; 2=Supply with limit; 3=Phasing out supply; 4=Supply as assembly; 5=Check other lists.

02 Truck Body (507046021502) Continuation 2

No.	Item Code	Mark	Item Description	Qty.	Substitute	Note
58	941100100006		Screw	2		
59	507021510002		Intermediate Hood	1		
60	940600400001		Dust Cover	1		
61	505621520025		Protective Cover	1		
62	941100100003		Screw	4		
63	507021520022		Shields	1		
64	941100100002		Screw	2		

03 Fork lift assembly (507046038501)

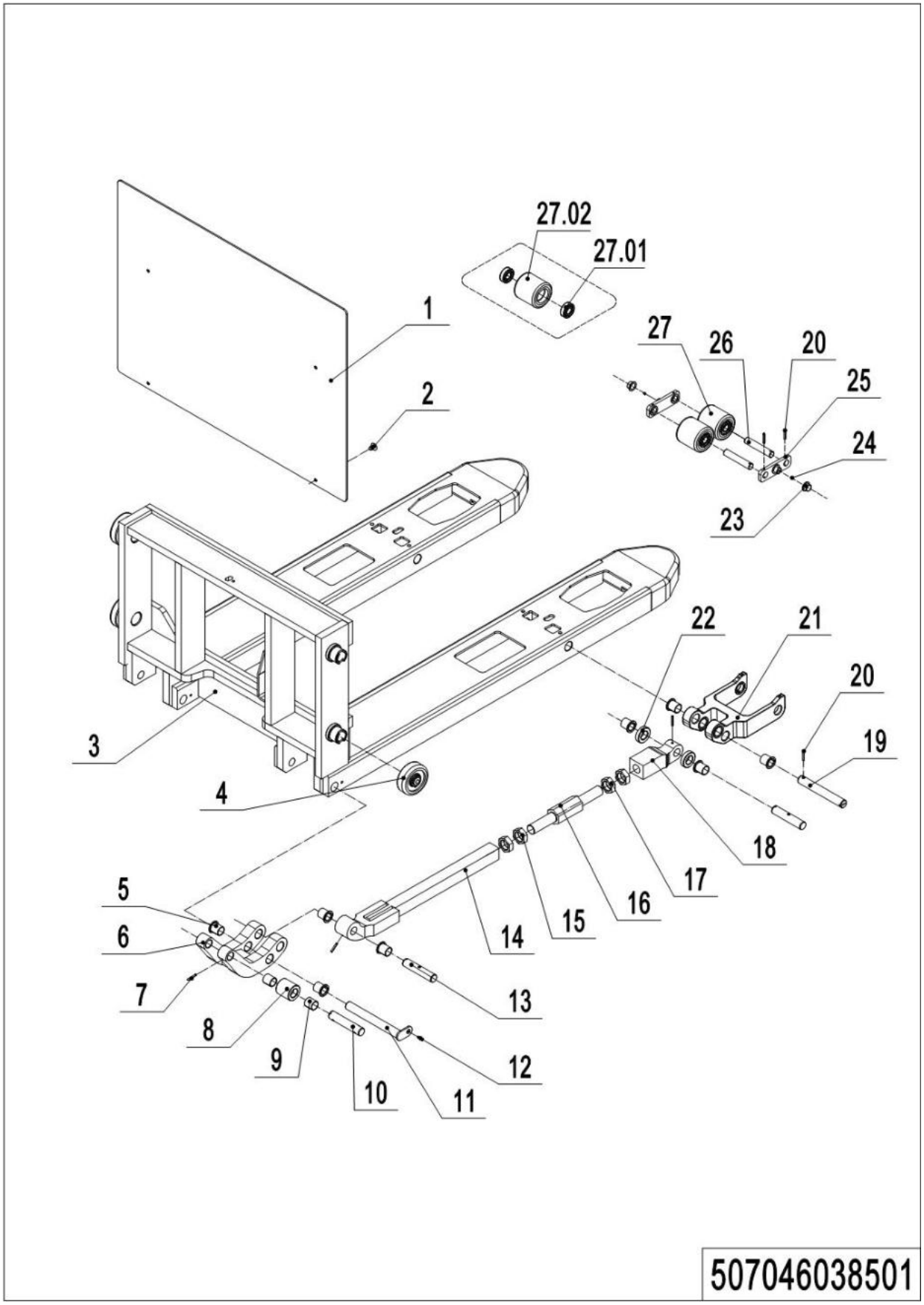

1=Supply as package; 2=Supply with limit; 3=Phasing out supply; 4=Supply as assembly; 5=Check other lists.

03 Fork lift assembly (507046038501)

No.	Item Code	Mark	Item Description	Qty.	Substitute	Note
1	507038520018		Sealing Plate	1		
2	910200400015	1	Screw	4		
3	507038510000		Welding of fork	1		(685x1150)
3	507038510002		Welding of fork	1		(560x1150)
3	507038510003		Welding of fork	1		(685x1500)
3	507038510005		Welding of fork	1		(560x1500
4	940200300008		Compound Roller	4		
5	940500200042		Bushing	16		
6	566538510002		Rib Plate	2		
7	910600500003		Spring Pin	4		
8	566538520056		Roller	2		
9	940500100012		Bushing	4		
10	566538520055		Axle	2		
11	507038510006		Trunnions	2		
12	910200200035	1	Screw	2		
13	566538520053		Axle	4		
14	507038510001		Tie Rod Welding (1150)	2		
14	507038510004		Tie Rod Welding (1500)	2		
15	910300400011	1	Nut	4		
16	566538520033		Adjusting Rod	2		
17	910300400015	1	Nut	4		左旋
18	507038520027		Connecting Rod	2		
19	566538520054		Axle	2		
20	910600500005	1	Spring Pin	10		
21	566538520049		Riser	2		
22	566538520057		Guide Roller	2		
23	940500200040		Bushing	4		
24	911200100001	1	Oil Cup	4		
25	566517020000		Connecting Plate	4		

03 Fork lift assembly (507046038501) Continuation

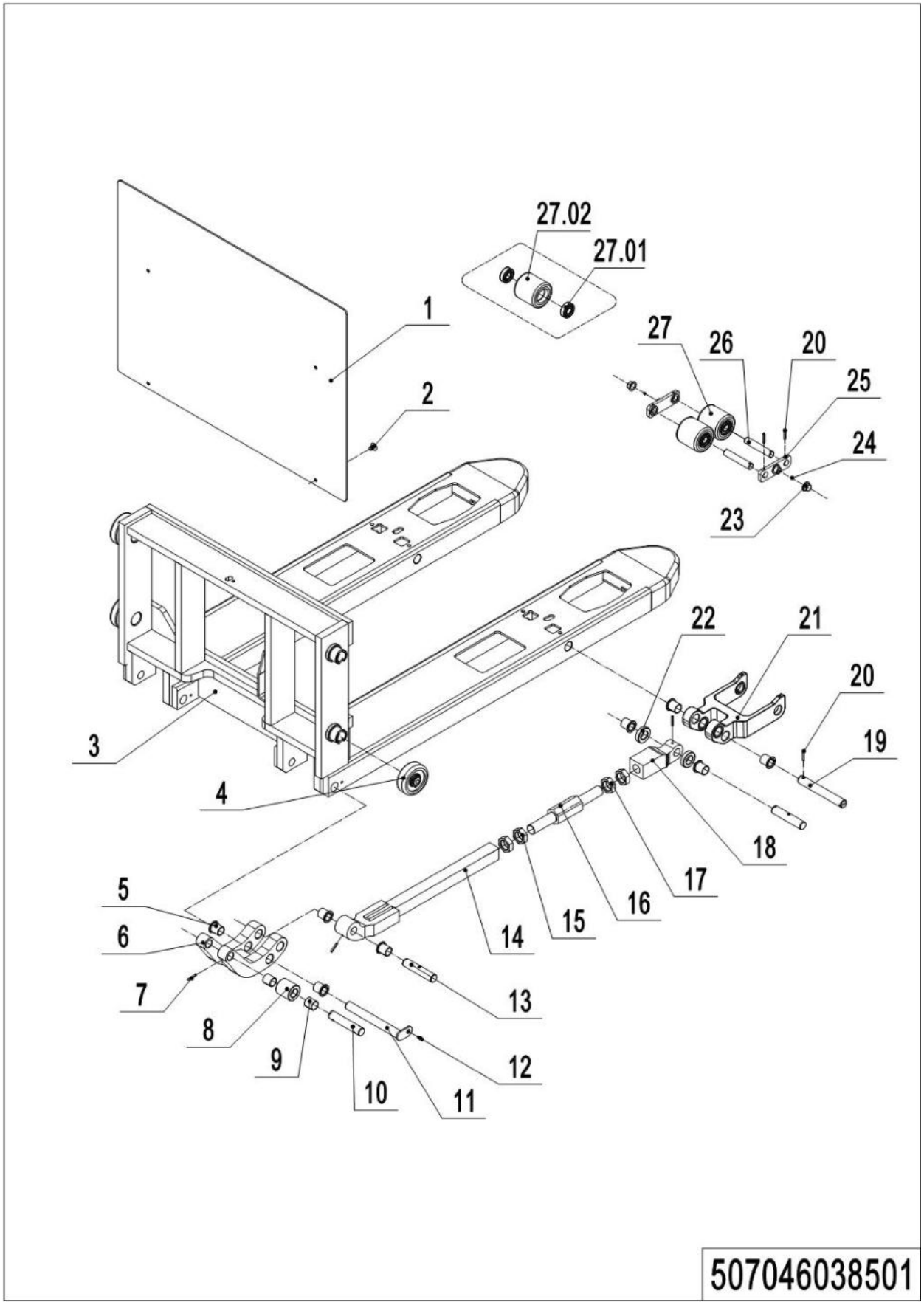

1=Supply as package; 2=Supply with limit; 3=Phasing out supply; 4=Supply as assembly; 5=Check other lists.

03 Fork lift assembly (507046038501) Continuation

No.	Item Code	Mark	Item Description	Qty.	Substitute	Note
26	505617020000		Axle	4		
27	507098510002		Wheel set	2		
27.01	940300300048		Wheel	4		
27.02	910700200019	1	Bearing	8		

04 Protective arm (507046017501)

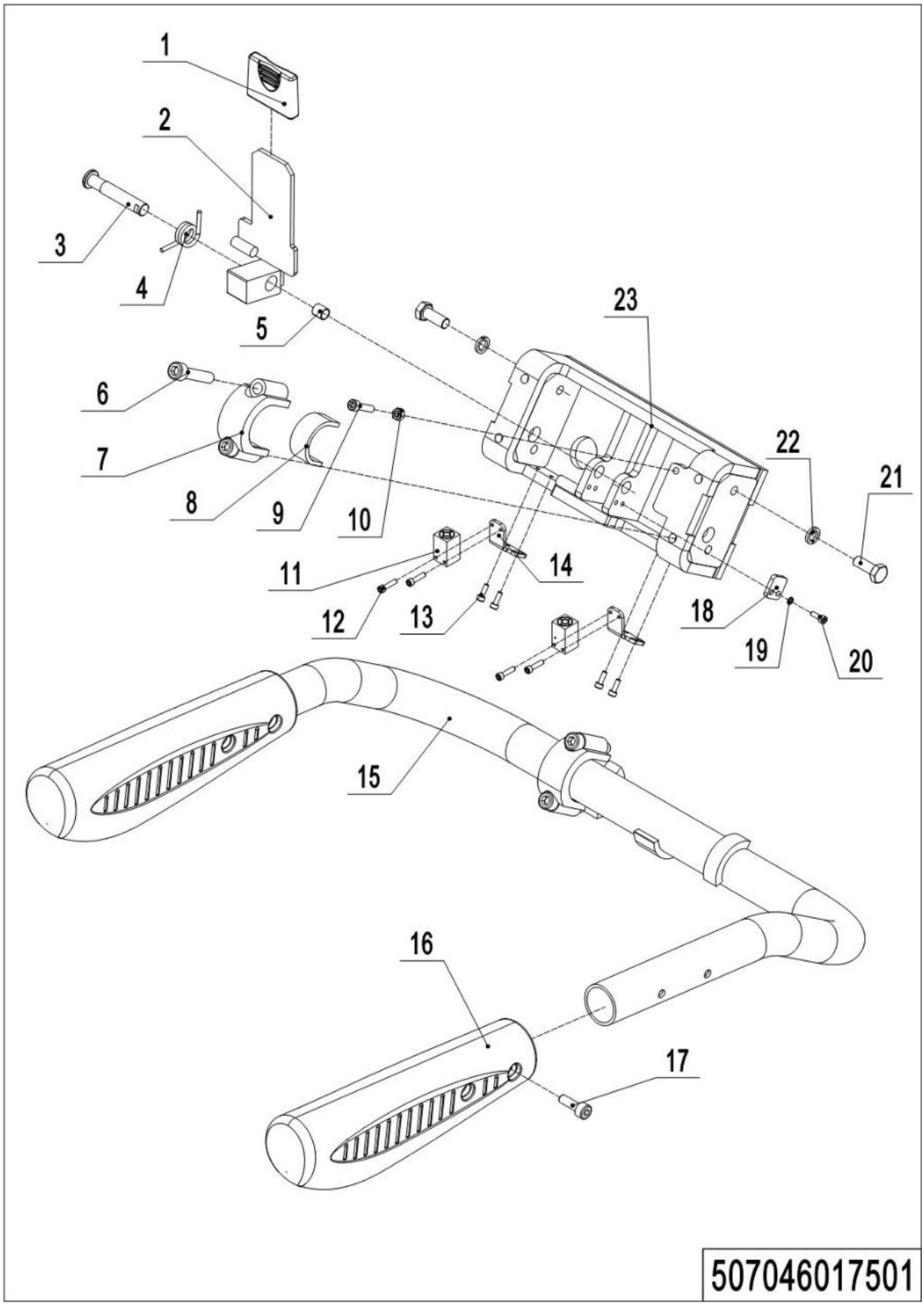

1=Supply as package; 2=Supply with limit; 3=Phasing out supply; 4=Supply as assembly; 5=Check other lists.

04 Protective arm (507046017501)

No.	Item Code	Mark	Item Description	Qty.	Substitute	Note
1	507017520013		Positioning Sleeve	1		
2	507017510002		Seat welding	1		
3	507017520011		Axles Φ12x61	1		
4	507017520001		Torsion spring	1		
5	940500100002		Bushing	2		
6	910200200080	1	Screw	4		
7	505617520005		Fixing Base	2		
8	505617520021		Friction	2		
9	910200200037	1	Screw	1		
10	910300100005		Nut	1		
11	505633510001		Proximity Switch	2		
12	910200500015	1	Screw	4		
13	910200500022	1	Screw	4		
14	507017520000		Mounting Plate	2		
15	507017510001		Arm Welding	1		
16	505617510002		Guard Arm Sleeve	2		
17	910200300025	1	Screw	8		
18	507017520012		Trunnions	1		
19	910400500003	1	Spring Washer	2		
20	910200200014	1	Screw	2		
21	910100300036	1	Bolt	4		
22	910400500007	1	Spring Washer	4		
23	507017510000		Butt welding	1		

05 Pedals (507046018001)

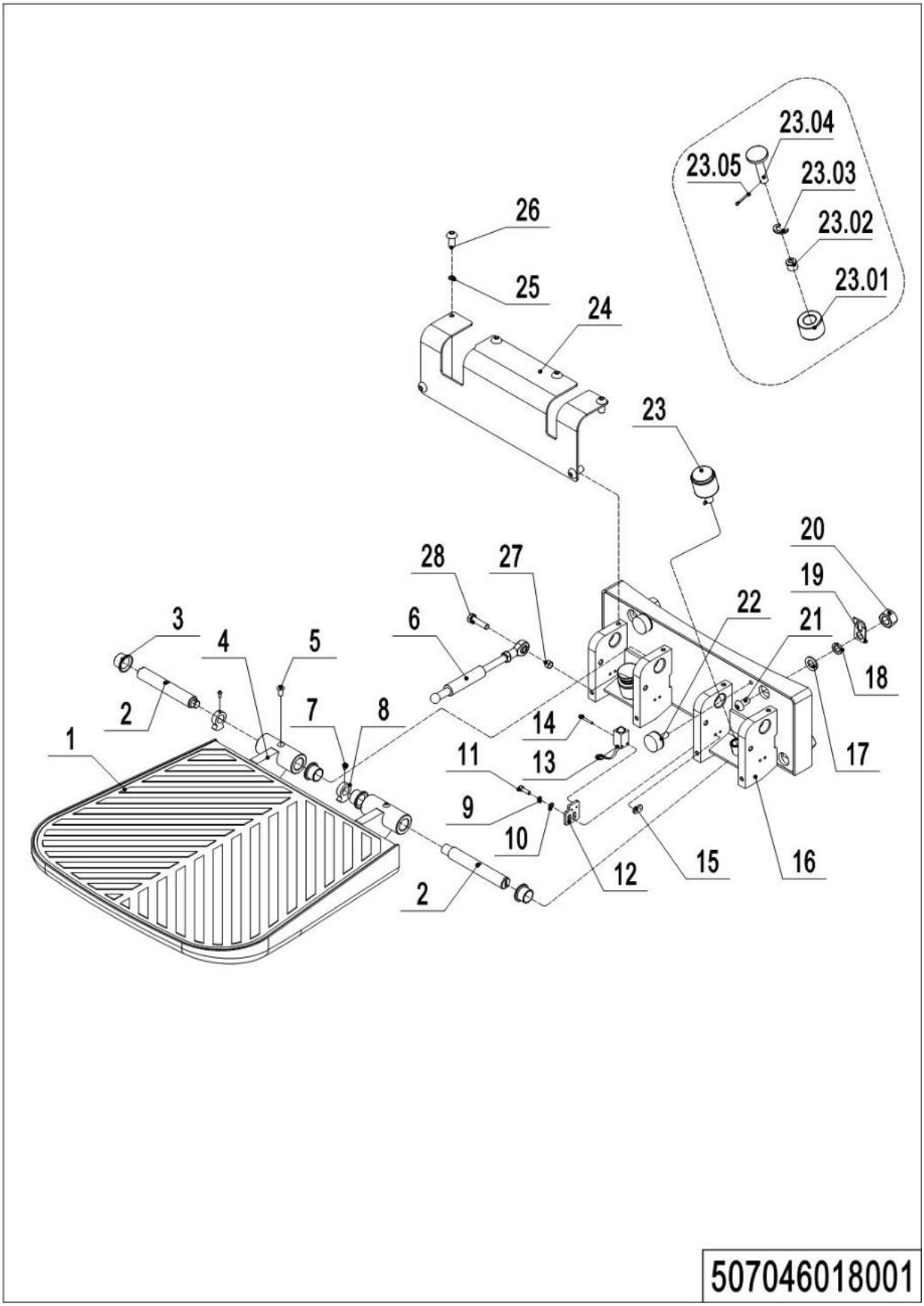

1=Supply as package; 2=Supply with limit; 3=Phasing out supply; 4=Supply as assembly; 5=Check other lists.

05 Pedals (507046018001)

No.	Item Code	Mark	Item Description	Qty.	Substitute	Note
1	505618020018		Rubber Mat	1		
2	505618020017		Pin	2		
3	940500200008		Bushing	4		
4	505618010000		Platform	1		
5	910200300018	1	Screw	2		
6	940400100039		Air Spring	1		
7	910300400006		Nut	1		
8	505618020024		Cam	2		
9	910400500004	1	Spring Washer	4		
10	910400100004	1	Flat Washer	4		
11	910200200023	1	Screw	4		
12	505618020026		Mounting Plate	2		
13	505633510002	2	Proximity Switch	2		
14	910200500015	1	Screw	4		
15	505618020027		Mounting Plate	1		
16	505618010001		Mounting Base	1		
17	910400100008	1	Flat Washer	4		
18	910400500008	1	Spring Washer	4		
19	505618020025		Pipe Clip	1		
20	910300500006	1	Nut	4		
21	910200200100	1	Screw	4		
22	505618020016		Crash Pad	2		
23	505698510002		Buffer Kits	2		
23.01	505618020029		Crash Pad	2		
23.02	505618020030		Sleeve	2		
23.03	505618020032		Pad	2		
23.04	505618020021		Pin	2		
23.05	910600600026	1	Cotter Pin	2		
24	505618020019		Protective Cover	1		
25	910400500005	1	Spring Washer	6		

1=Supply as package; 2=Supply with limit; 3=Phasing out supply; 4=Supply as assembly; 5=Check other lists.

05 Pedals (507046018001) Continuation

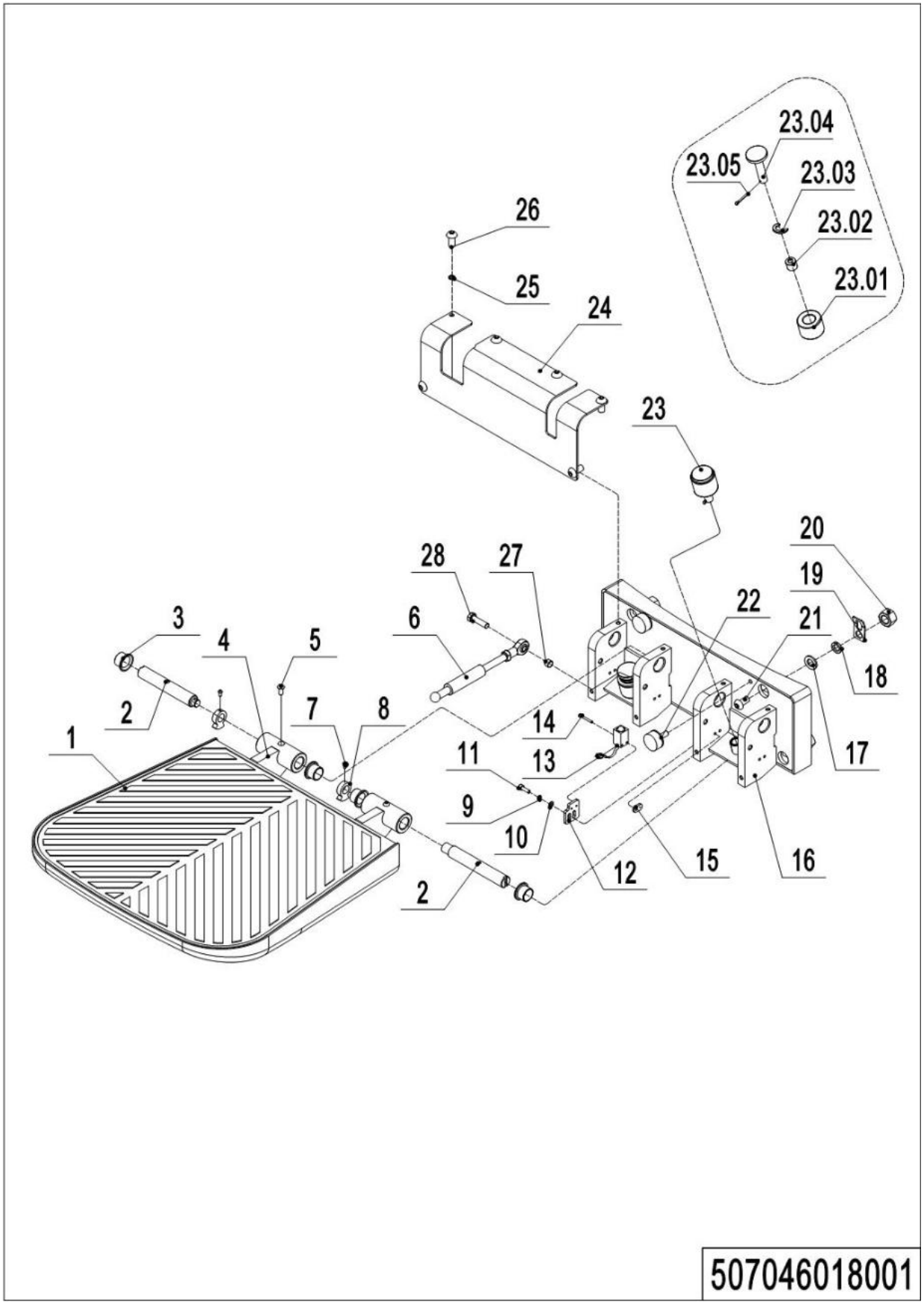

05 Pedals (507046018001) Continuation

No.	Item Code	Mark	Item Description	Qty.	Substitute	Note
26	910200300017	1	Screw	6		
27	505618020028		Spacer Bush	1		
28	910100300024	1	Bolt	1		
--	507098510003		Pedal Assembly	1		

1=Supply as package; 2=Supply with limit; 3=Phasing out supply; 4=Supply as assembly; 5=Check other lists.

06 Bib Pedal (507046018002)

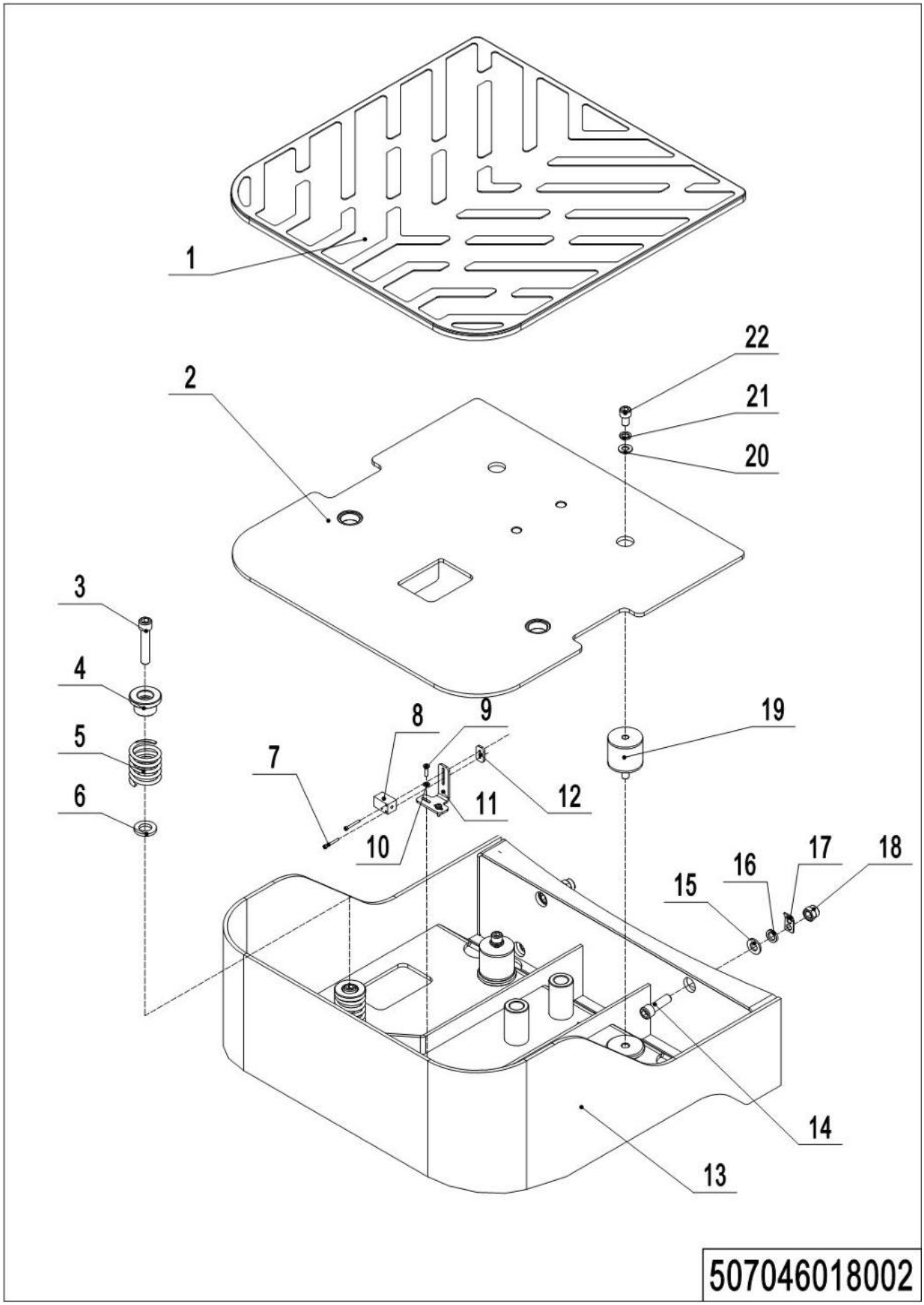

1=Supply as package; 2=Supply with limit; 3=Phasing out supply; 4=Supply as assembly; 5=Check other lists.

06 Bib Pedal (507046018002)

No.	Item Code	Mark	Item Description	Qty.	Substitute	Note
1	505618020018		Rubber Mat	1		
2	507018010000		Pedal bonding	1		
3	910200200084		Screw	2		
4	507018020002		Upper Spring seat	2		
5	940400500004		Spring	2		
6	507018020003		Nylon Sleeve	2		
7	910200500016		Screw	2		
8	505633510002	2	Proximity Switch	1		
9	910200500022		Screw	2		
10	910400100003		Flat Washer	2		
11	507018020001		Mounting Plate	1		
12	509021520054		Mounting Plate	1		
13	507018010001		Mounting base welding	1		
14	910200200100	1	Screw	4		
15	910400100008	1	Flat Washer	4		
16	910400500008	1	Spring Washer	4		
17	505618020025		Pipe Clip	1		
18	910300500006	1	Nut	4		
19	566518020088		Shock Absorber	2		
20	910400100007	1	Flat Washer	2		
21	910400500007	1	Spring Washer	2		
22	910200200074		Screw	2		

Chapter 4: Steering System, Braking System, Wheels

01 Tiller **assembly (535946011001)**

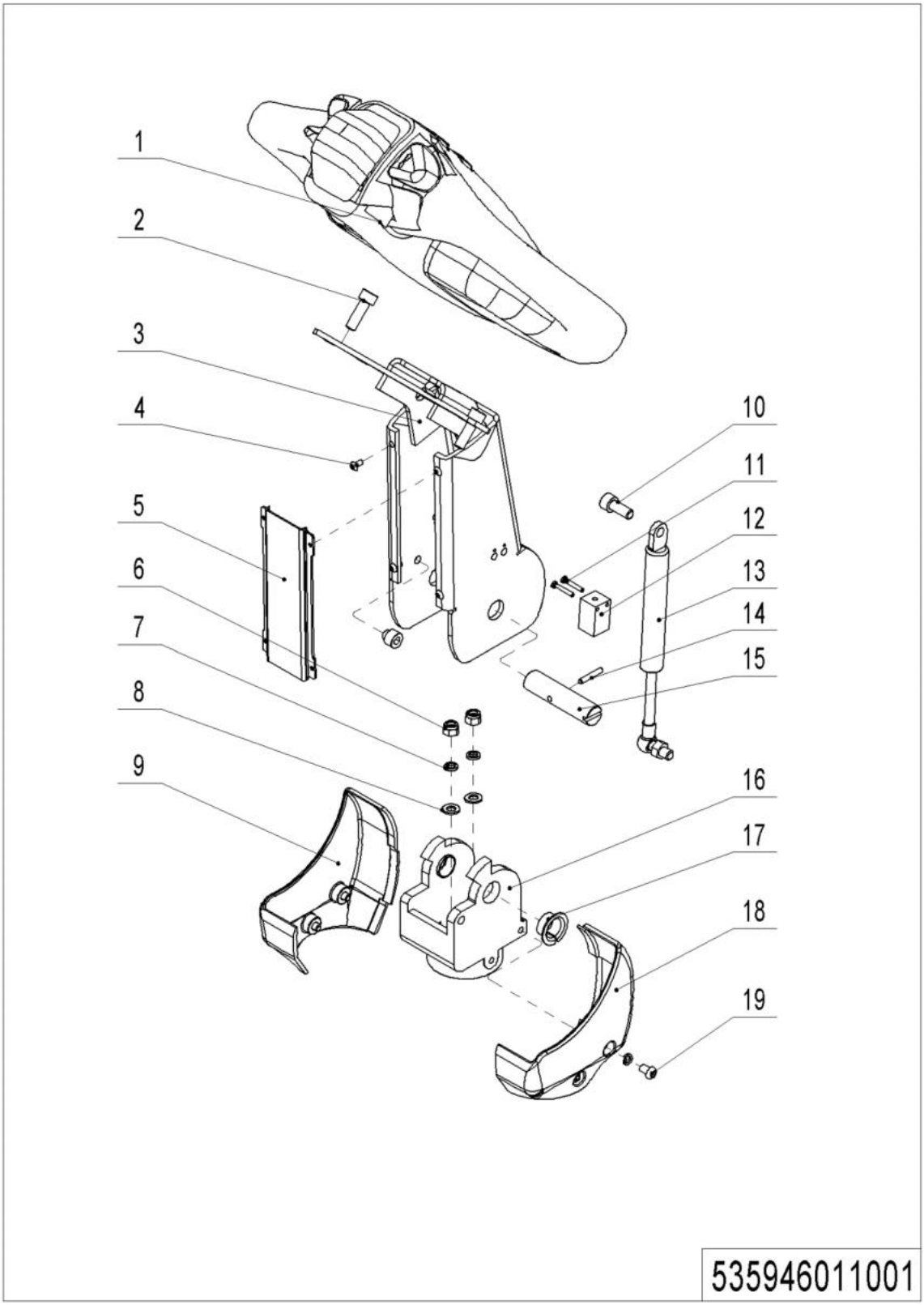

1=Supply as package; 2=Supply with limit; 3=Phasing out supply; 4=Supply as assembly; 5=Check other lists.

01 Tiller assembly (535946011001)

No.	Item Code	Mark	Item Description	Qty.	Substitute	Note
1	922100100001		Tiller	1		**REMA**
1	922100100012		Tiller	1		德通
2	910200200058	1	Screw	2		
3	535911010000	2	Tiller	1		
3	535911010001	2	Tiller	1		
4	910200300005	1	Screw	4		
5	535911020003		Close Plate	1		
5	535911020008		Close Plate	1		
6	910300500005	1	Nut	2		
7	910400500007	1	Spring Washer	2		
8	910400100007	1	Flat Washer	2		
9	535911020005		Protective Cover	1		
10	910200200057	1	Screw	1		
11	910200500015	1	Screw	2		
12	506733510002		Proximity Switch	1		
13	940400100001		Air Spring	1		
13	940400100045		Air Spring	1		
14	910600400013	1	Spring Pin	1		
15	505611020008		Axle	1		
16	535911020004		Bracket	1		
16	535911020009		Bracket	1		
17	940500200002		Bushing	2		
18	535911020006		Protective Cover	1		
19	910200300016	1	Screw	4		

02 Tiller **(535946011002)**

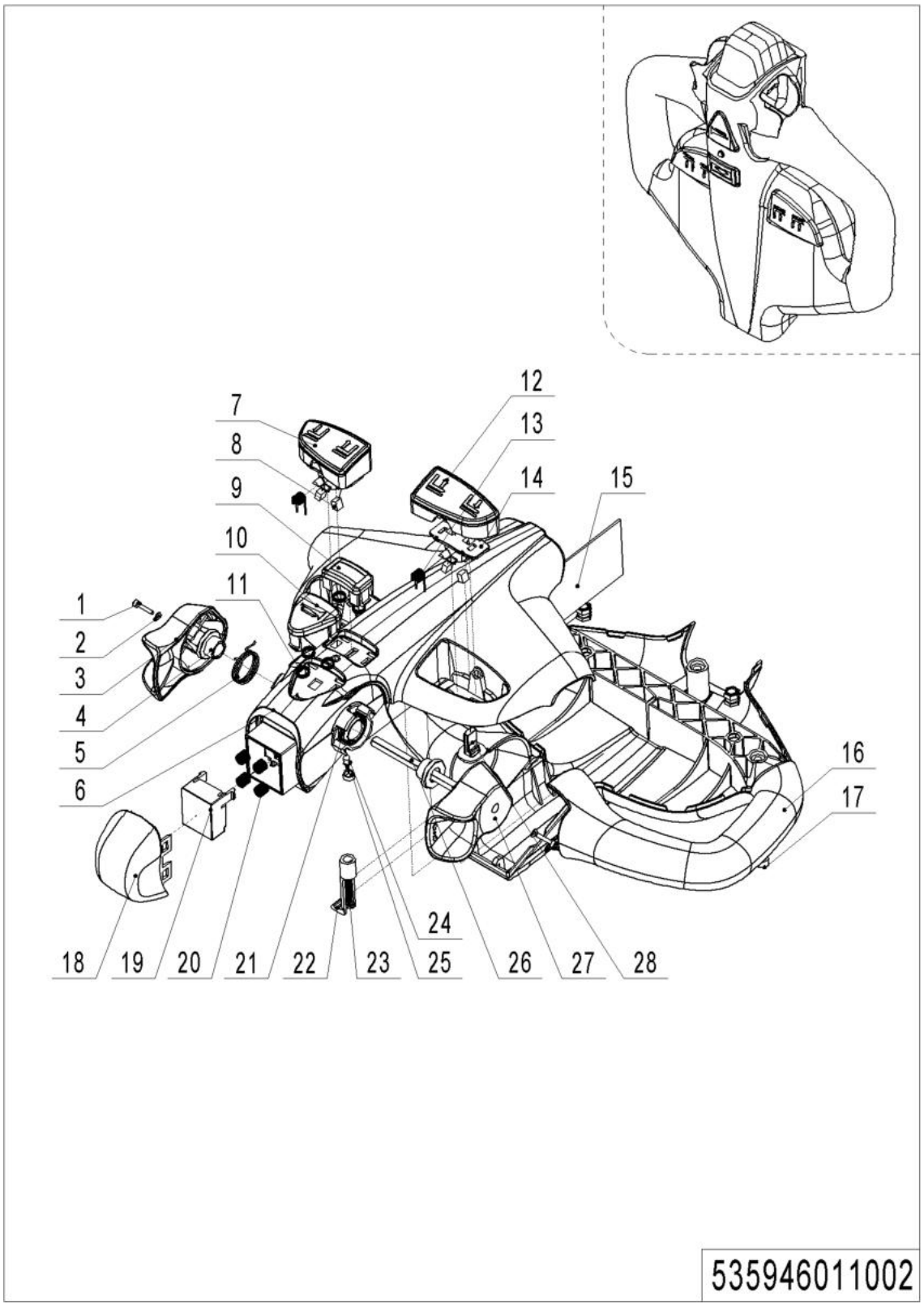

1=Supply as package; 2=Supply with limit; 3=Phasing out supply; 4=Supply as assembly; 5=Check other lists.

02 Tiller (535946011002)

No.	Item Code	Mark	Item Description	Qty.	Substitute	Note
--	922100100001		Tiller	1		
1	505698520008		Screw	2		
2	505698520009		Washer	2		
3	505698520001		Traction lever	1		
4	505698520004		Sleeve	2		
5	505698520027		Torsional Spring	1		
6	505698520014		Handle Cap	1		
7	505698520016		Button cap	1		
8	505698520005		Magnet	4		
9	505698520021		Button Cap	1		
10	505698520002		Horn Button	1		
11	505698520003		Spring	5		
12	505698520022		Button Cap	1		
13	505698520018		Torsional Spring	2		
14	505698520017		Fixing Base	2		
15	505698520028		circuit Board	1		
16	505698520015		Handle Cap	1		
17	505698520007		Screw	3		
18	505698520020		Button Cap-	1		
19	505698520019		Pedestal	1		
20	505698520006		Spring	4		
21	505698520026		Torsional Spring	1		
22	505698520012		Clamp	1		
23	505698520023		Screw	1		
24	505698520024		Light	1		
25	505698520025		Lamp Holder	1		
26	505698520011		Axle-Traction lever	1		
27	505698520010		Traction lever	1		
28	505698520013		Sensor	2		

03 Tiller（**505646011002**）

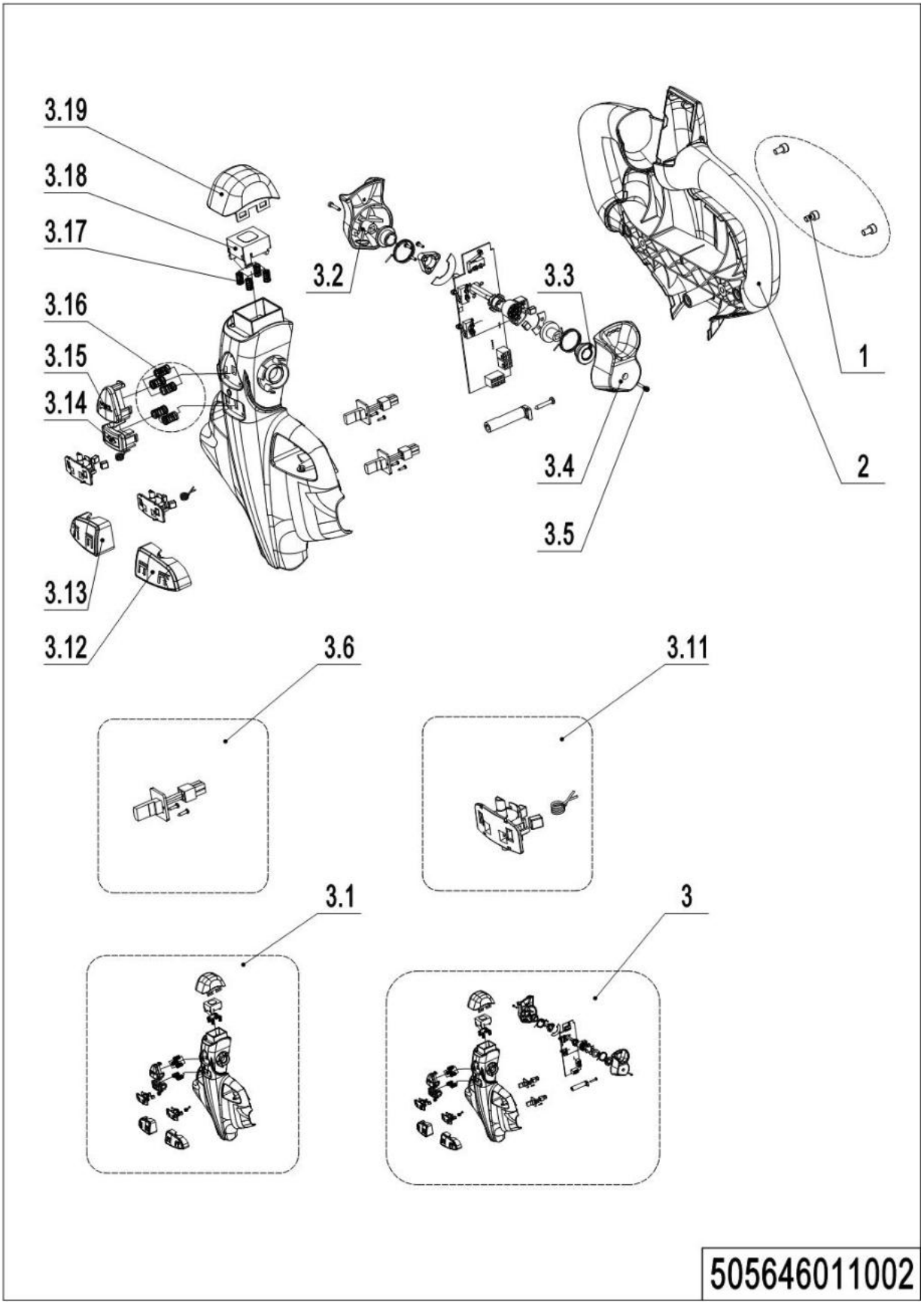

1=Supply as package; 2=Supply with limit; 3=Phasing out supply; 4=Supply as assembly; 5=Check other lists.

03 Tiller（505646011002）

No.	Item Code	Mark	Item Description	Qty.	Substitute	Note
1	910200200032	1	Screw	3		M6×10
2	505698520124	2	Handle Cap	1		
3	505698510024	2	Handle Cap Kit	1		
3.1	505698510021	2	Handle Cap Kit	1		
3.11	505698510023	2	Sensor	1		
3.12	505698520113	2	Button	1		
3.13	505698520114	2	Button	1		
3.14	505698520115	2	Button	1		
3.15	505698520116	2	Button	1		
3.16	505698520117	2	Spring	5		
3.17	505698520118	2	Spring	4		
3.18	505698520119	2	Cover	1		
3.19	505698520120	2	Cover	1		
3.2	505698520121	2	Traction lever	1		
3.3	505698520122	2	Sleeve	2		
3.4	505698520123	2	Traction lever	1		
3.5	910200200004	1	Screw	2		M3×16
3.6	505698510022	2	Magnetic Steel Base Kit	1		
--	922100100012		Tiller	1		

04 Balance Wheel Assembly (507046016501)

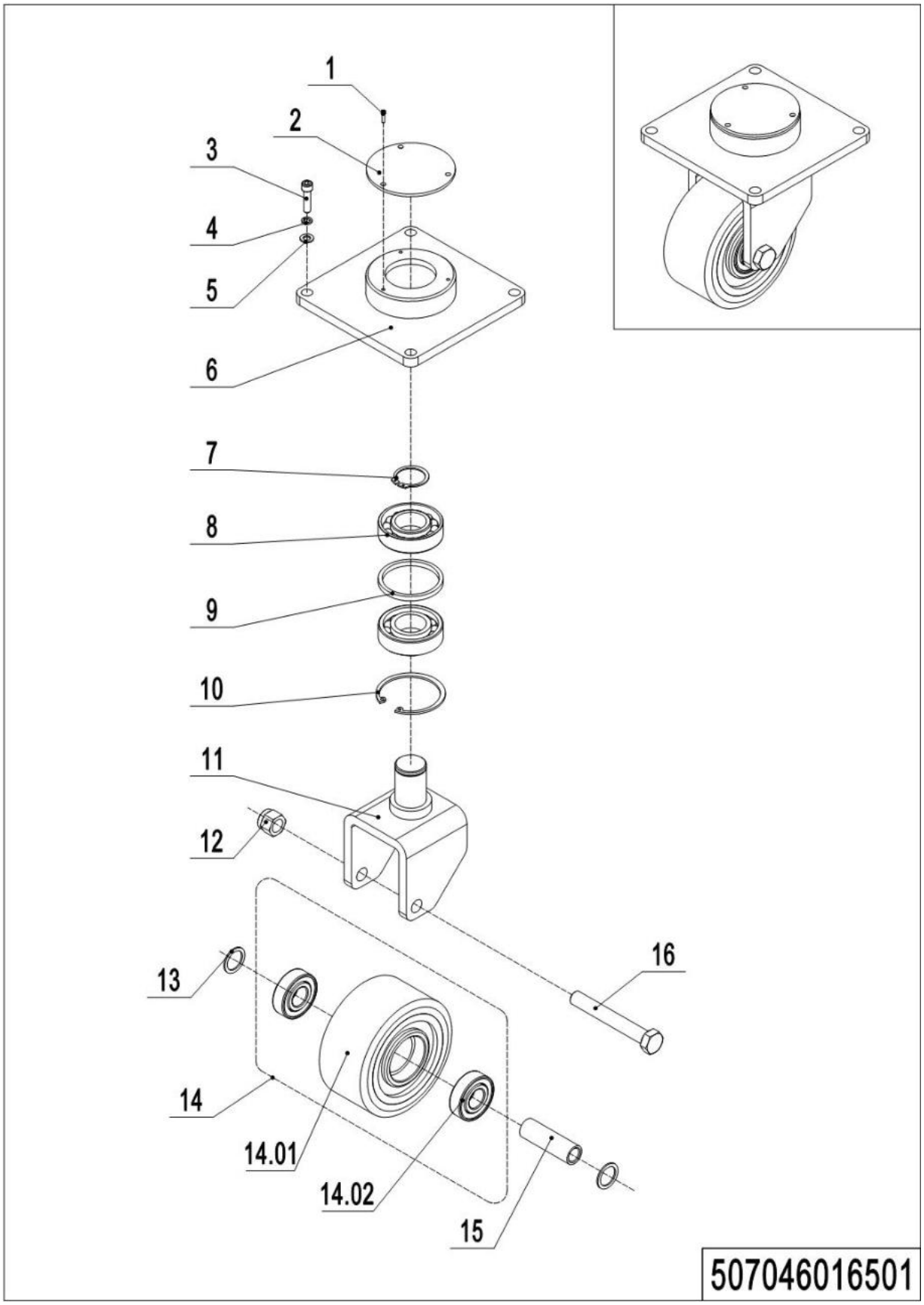

1=Supply as package; 2=Supply with limit; 3=Phasing out supply; 4=Supply as assembly; 5=Check other lists.

04 Balance Wheel Assembly (507046016501)

No.	Item Code	Mark	Item Description	Qty.	Substitute	Note
--	507016510001		Balance Wheel Assembly	2		
1	910200200012	1	Screw	6		
2	507016520001		Dust Cover	2		
3	910200200077	1	Screw	8		
4	910400500007	1	Spring Washer	8		
5	910400100007	1	Flat Washer	8		
6	507016510001		Bearing seat welding	2		
7	910401300016	1	Circlip	2		
8	910700400004		Bearing	4		
9	532616520001		Check Ring	2		
10	910401400018	1	Circlip	2		
11	532616510001		Wheel Carrier	2		
12	910300500007	1	Nut	2		
13	940600500014		Washer	2		
14	507098510001		Wheel set	2		
14.01	940300300044		WheelΦ124x60	2		
14.02	910700200019	1	Bearing	4		
15	532616520003		Bushing	2		
16	505616520012	1	Check Ring	2		

Chapter 5: Electrical Parts

01 Display Assembly (507046010001)

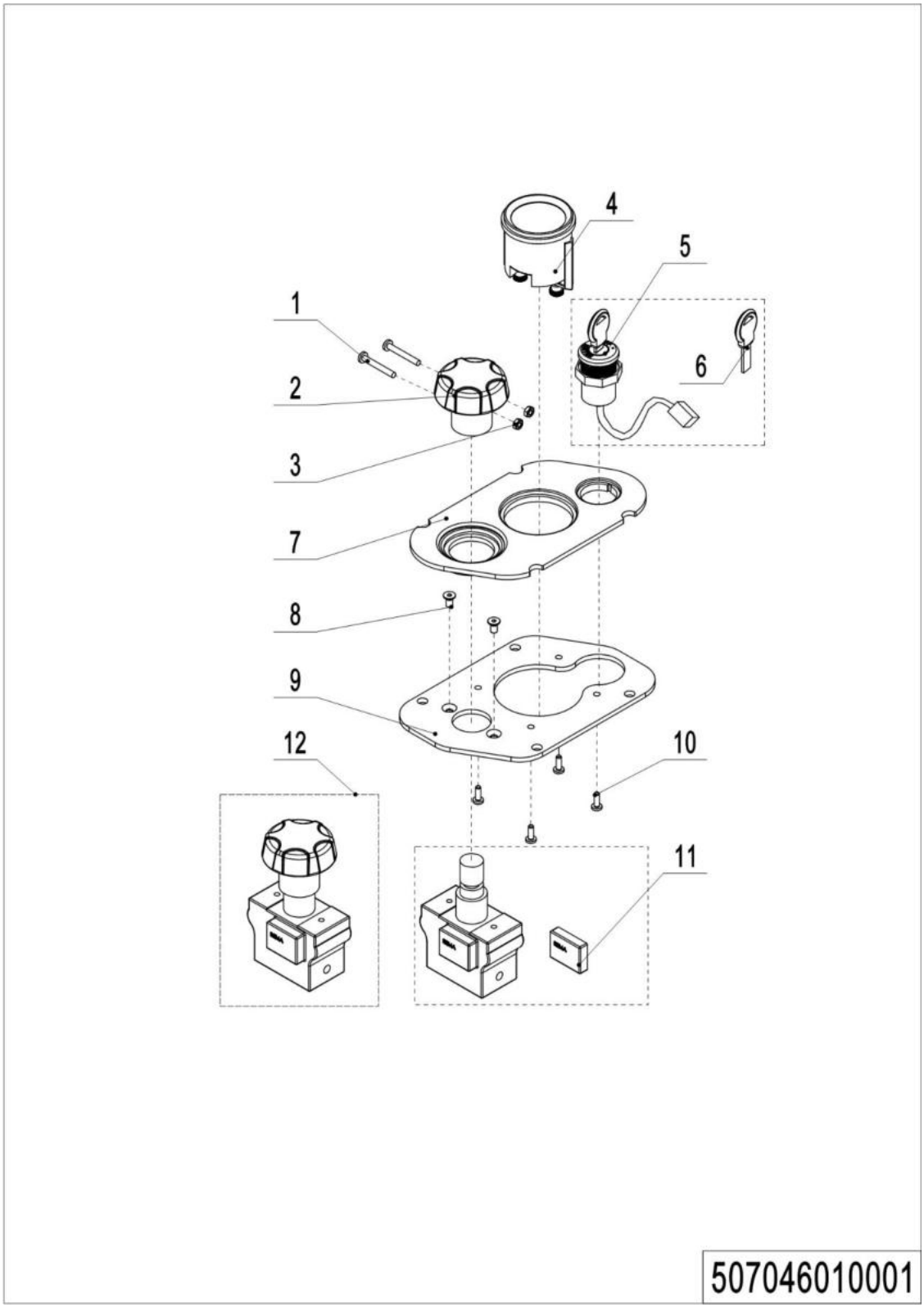

1=Supply as package; 2=Supply with limit; 3=Phasing out supply; 4=Supply as assembly; 5=Check other lists.

01 Display Assembly (507046010001)

No.	Item Code	Mark	Item Description	Qty.	Substitute	Note
1	910200500016	1	Screw	2		
2	505698520029	2	Button	1		
3	910300100002	1	Nut	2		
4	921100100094	2	Battery Indicator	1		
5	505634010001	2	Key Switch	1		
6	505698520031	2	Key	1		
7	505610020000		Panel	1		
8	910200400010	1	Screw	2		
9	505610020001		Fixing Plate	1		
10	910201300001	1	Screw	4		
11	920200100011	2	Emergency Button	1		
12	920200100001	2	Emergency Button	1		

02 Chargers (507046036501)

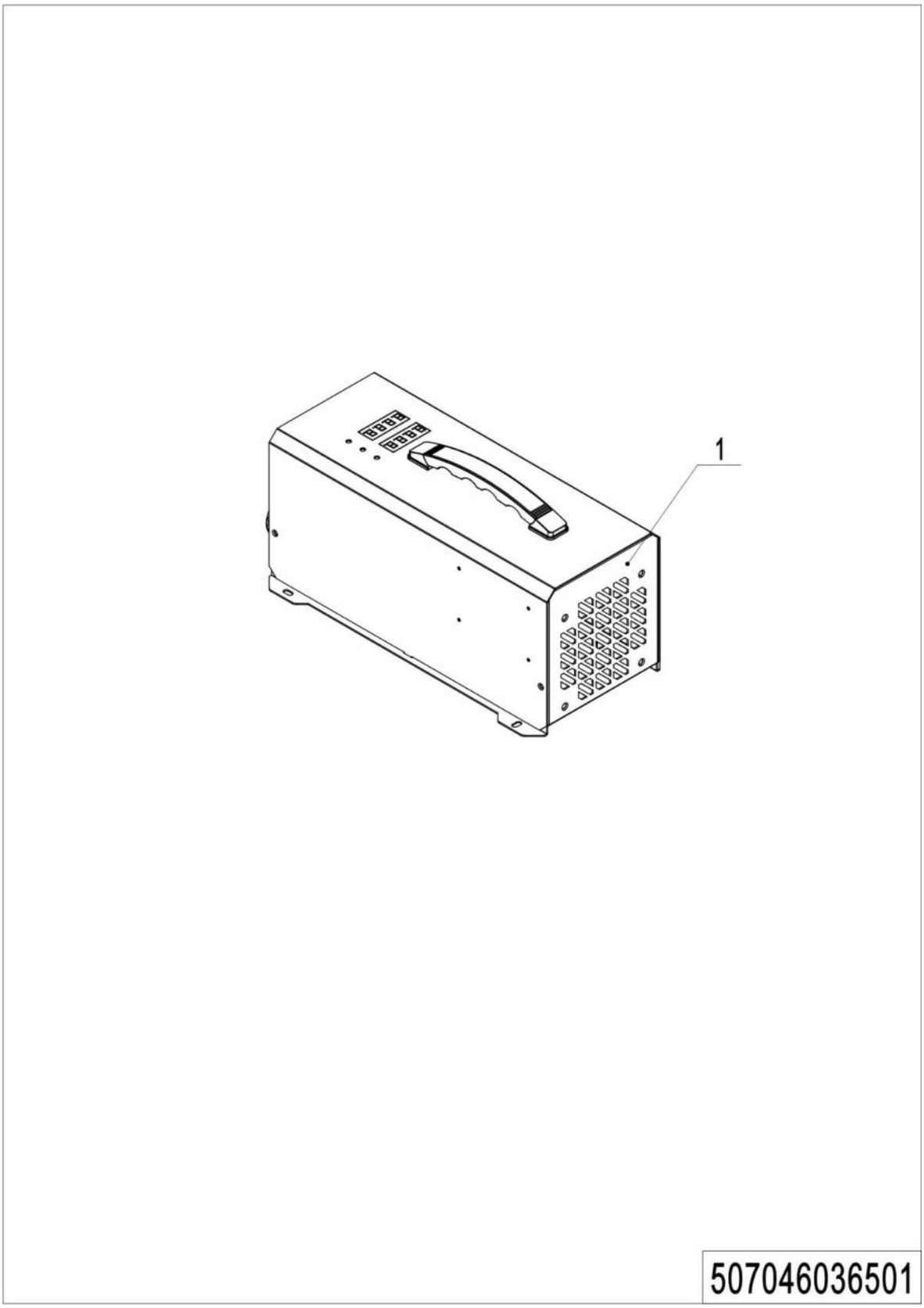

1=Supply as package; 2=Supply with limit; 3=Phasing out supply; 4=Supply as assembly; 5=Check other lists.

02 Chargers (507046036501)

No.	Item Code	Mark	Item Description	Qty.	Substitute	Note
1	921000200531	2	Charger 24V80A	1		Asia-CHN
1	921000200532	2	Charger 24V80A	1		Asia-EN
1	921000200533	2	Charger 24V80A	1		European
1	921000200534	2	Charger 24V80A	1		EN
1	921000200535	2	Charger 24V80A	1		AUS
1	921000200536	2	Charger 24V80A	1		Israel
1	921000200537	2	Charger 24V80A	1		ARG
1	921000200538	2	Charger 24V80A	1		South Africa
1	921000200539	2	Charger 24V80A	1		USA

03 Lithium battery (507046037001)

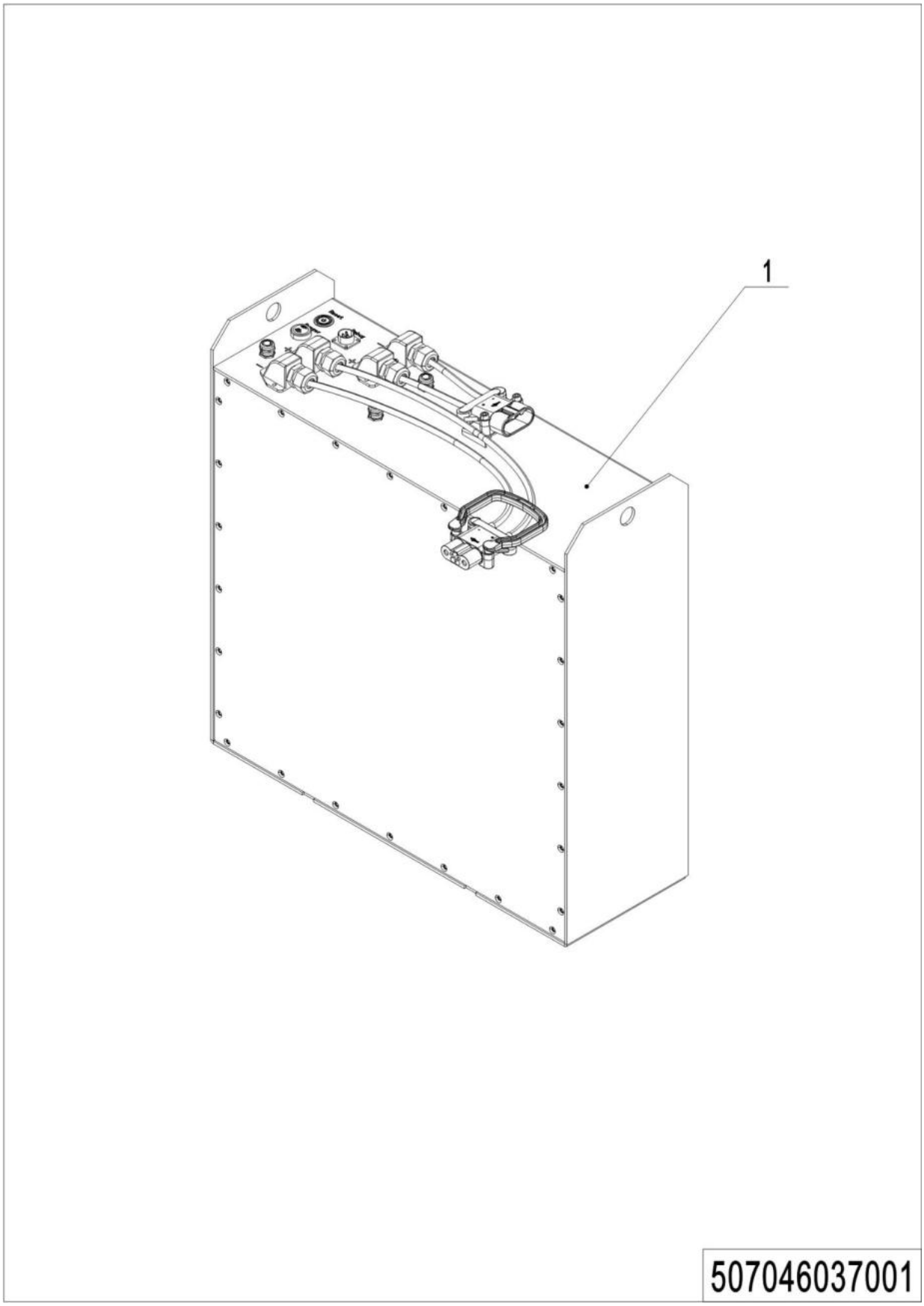

1=Supply as package; 2=Supply with limit; 3=Phasing out supply; 4=Supply as assembly; 5=Check other lists.

03 Lithium battery (507046037001)

No.	Item Code	Mark	Item Description	Qty.	Substitute	Note
1	507002037001		Lithium battery	1		24V150Ah
1	507002037002		Lithium battery	1		24V200Ah
1	507002037003		Lithium battery	1		24V230Ah

04 Electronic Control Unit (507046033001)

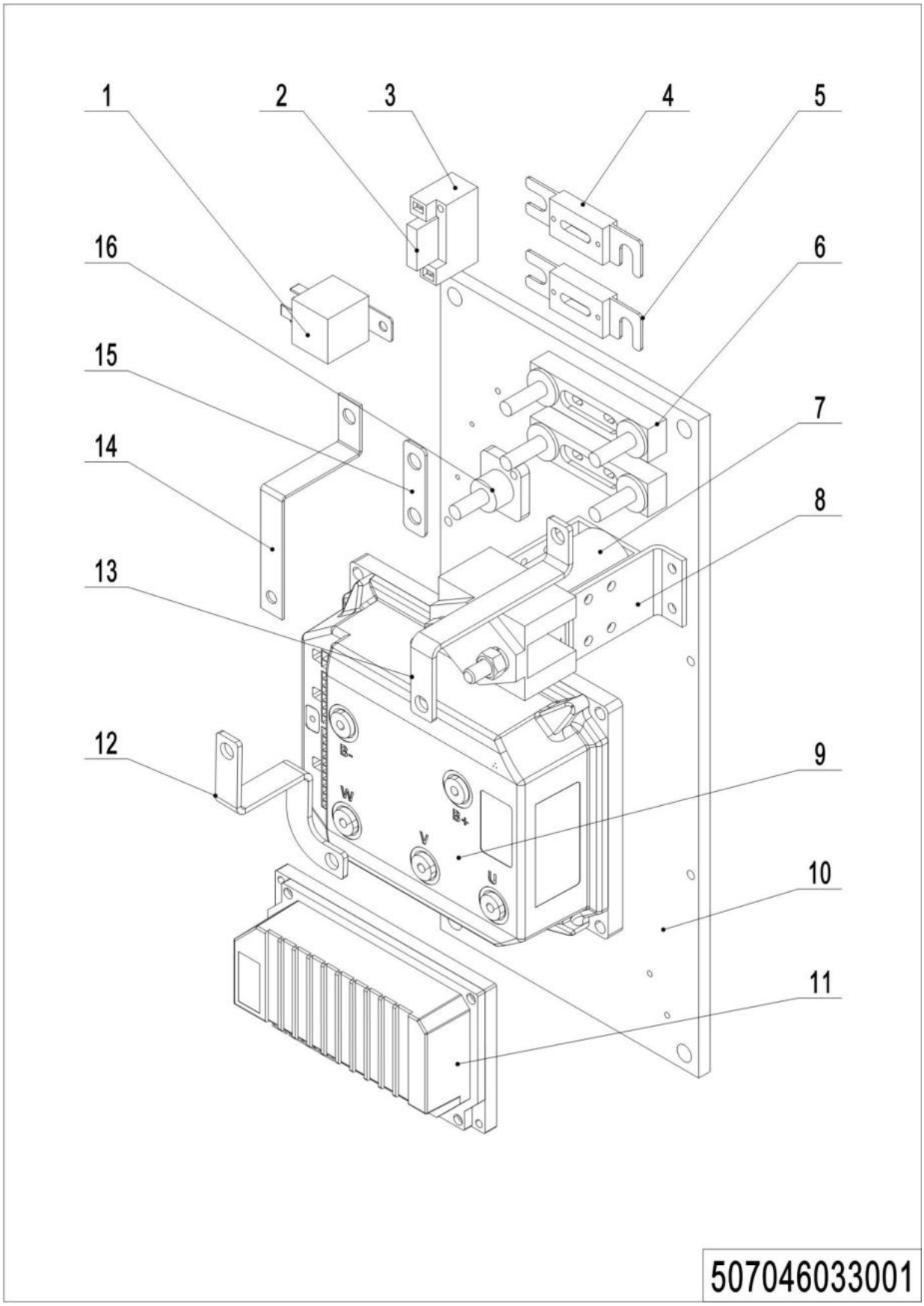

1=Supply as package; 2=Supply with limit; 3=Phasing out supply; 4=Supply as assembly; 5=Check other lists.

04 Electronic Control Unit (507046033001)

No.	Item Code	Mark	Item Description	Qty.	Substitute	Note
1	920800100011	2	Relay	1		
2	920100200002	2	Fuse	1		
3	920100400005	2	Fuse Holder	1		
4	920100100004	2	Fuse	1		PT20H、
4	920100100007	2	Fuse	1		PT25H、PT30H
5	920100100024	2	Fuse 250A	1		PT20H
5	920100100013	2	Fuse	1		PT20HPLUS、PT25H、
6	920100400002	2	Fuse Holder	2		
7	920700100018	2	Contactor	1		
8	921300400004		Holder	1		
9	921400100132	2	Controller	1		PT20H QT
9	921400100133	2	Controller LVM24S35H	1		PT20HPLUS、PT25H、PT30H QT
9	921400100005	2	Controller 1232E-2321	1		PT20H Curtis
9	921400100052	2	Controller	1		PT20HPLUS、PT25H、PT30H Curtis
10	507021520024		Mounting Plate	1		
11	921400100134	2	Controller	1		QT
11	921400100023	2	Controller	1		Curtis
12	507033020001		Copper Busbar	1		
13	535933020003		Copper Busbar	1		
14	505633020000		Copper Busbar	1		
15	505633020003		Copper Busbar	1		
16	920100400001		Fuse Holder	1		

05 Electrical wiring harness (507046033002)

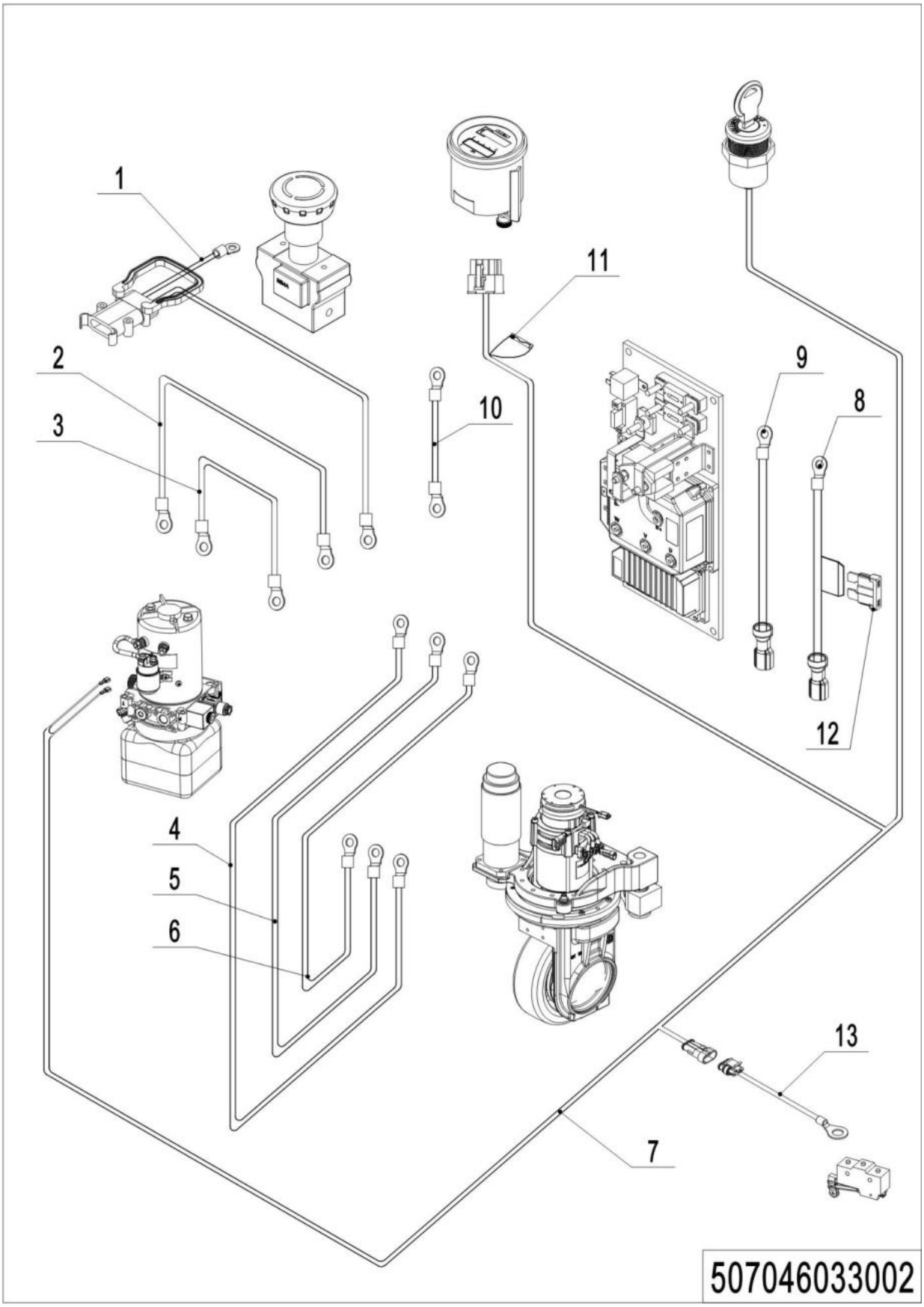

1=Supply as package; 2=Supply with limit; 3=Phasing out supply; 4=Supply as assembly; 5=Check other lists.

05 Electrical wiring harness (507046033002)

No.	Item Code	Mark	Item Description	Qty.	Substitute	Note
1	507033010004	2	Total power harness	1		
2	507033010006	2	Wire cable	1		P1+
3	507033010007	2	Wire cable	1		P-
4	507033010001	2	Wire cable	1		U
5	507033010002	2	Wire cable	1		V
6	507033010003	2	Wire cable	1		W
7	507033010011	2	Master Control Harness	1		QT EPS
7	507033010021	2	Master Control Harness	1		QT
7	507033010000	2	Master Control Harness	1		Curtis EPS
7	507033010020	2	Master Control Harness	1		Curtis
8	507033010016	2	Harness	1		
9	507033010009	2	Harness	1		EPS B2-
10	507033010015	2	Wire cable	1		FU
11	920100300001	2	Fuse	1		
12	920100200013	2	Fuse 30A	1		
13	507033010026	2	Limit Harness	1		QT
13	507033010025	2	Limit Harness	1		Curtis

Chapter 7: Others

01 Labels and Decals (507046047003)

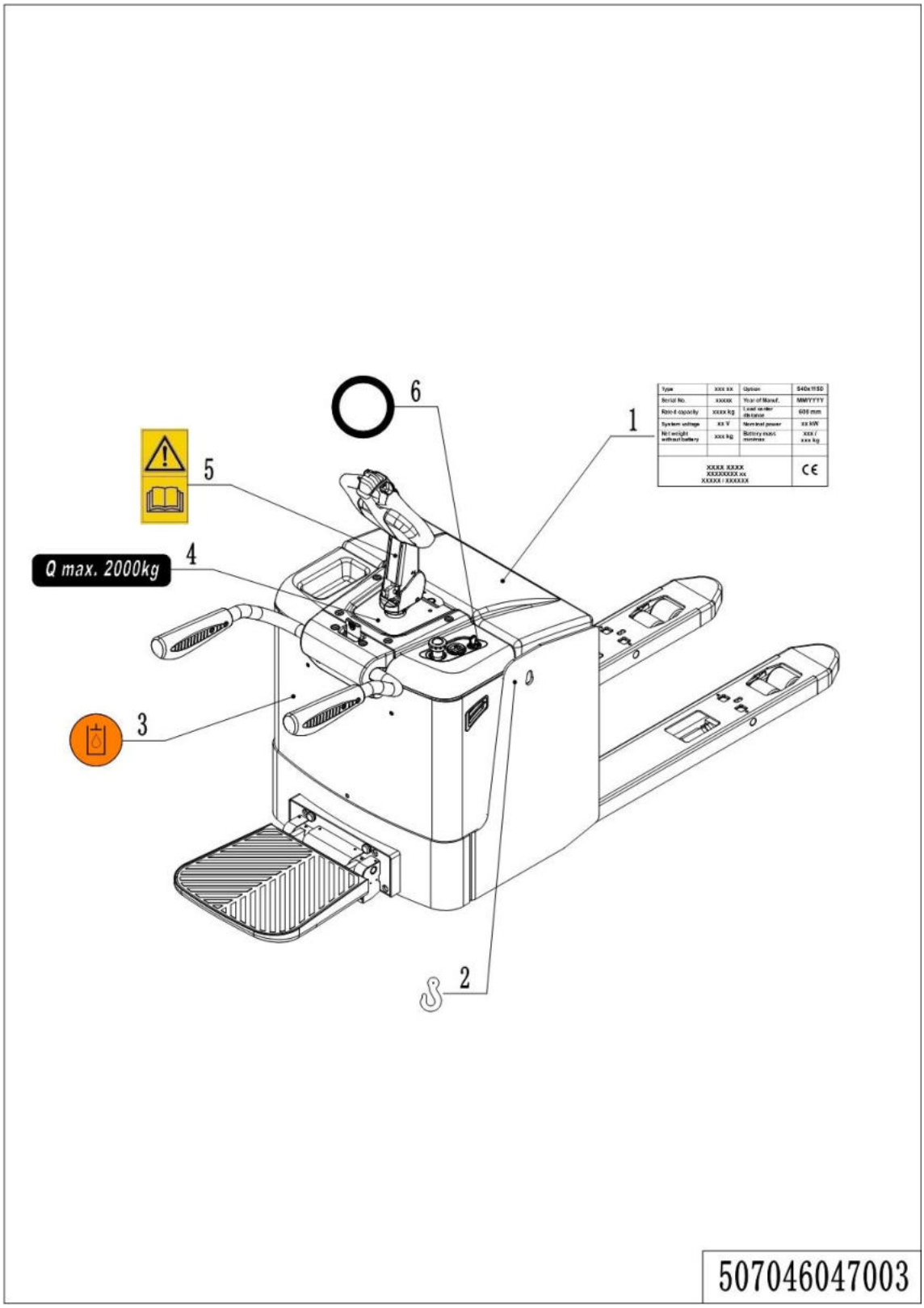

1=Supply as package; 2=Supply with limit; 3=Phasing out supply; 4=Supply as assembly; 5=Check other lists.

01 Labels and Decals (506746047003)

No.	Item Code	Mark	Item Description	Qty.	Substitute	Note
1	507047020001		Truck data plate	1		**PT20H**
1	507047020002		Truck data plate	1		**PT20HPLUS**
1	507047020003		Truck data plate	1		**PT25H**
1	507047020004		Truck data plate	1		**PT30H**
2	941200300001		Label	2		
3	941200300003		Label	1		
4	941200200010		Label	1		**PT20H、PT20HPLUS**
4	941200200011		Label	1		**PT25H**
4	941200200013		Label	1		**PT30H**
5	941200300001		Label	1		
6	941200400013		Label	1		

Appendix

01 Electrical Circuit Diagram,PT20H Curtis(507046045501)

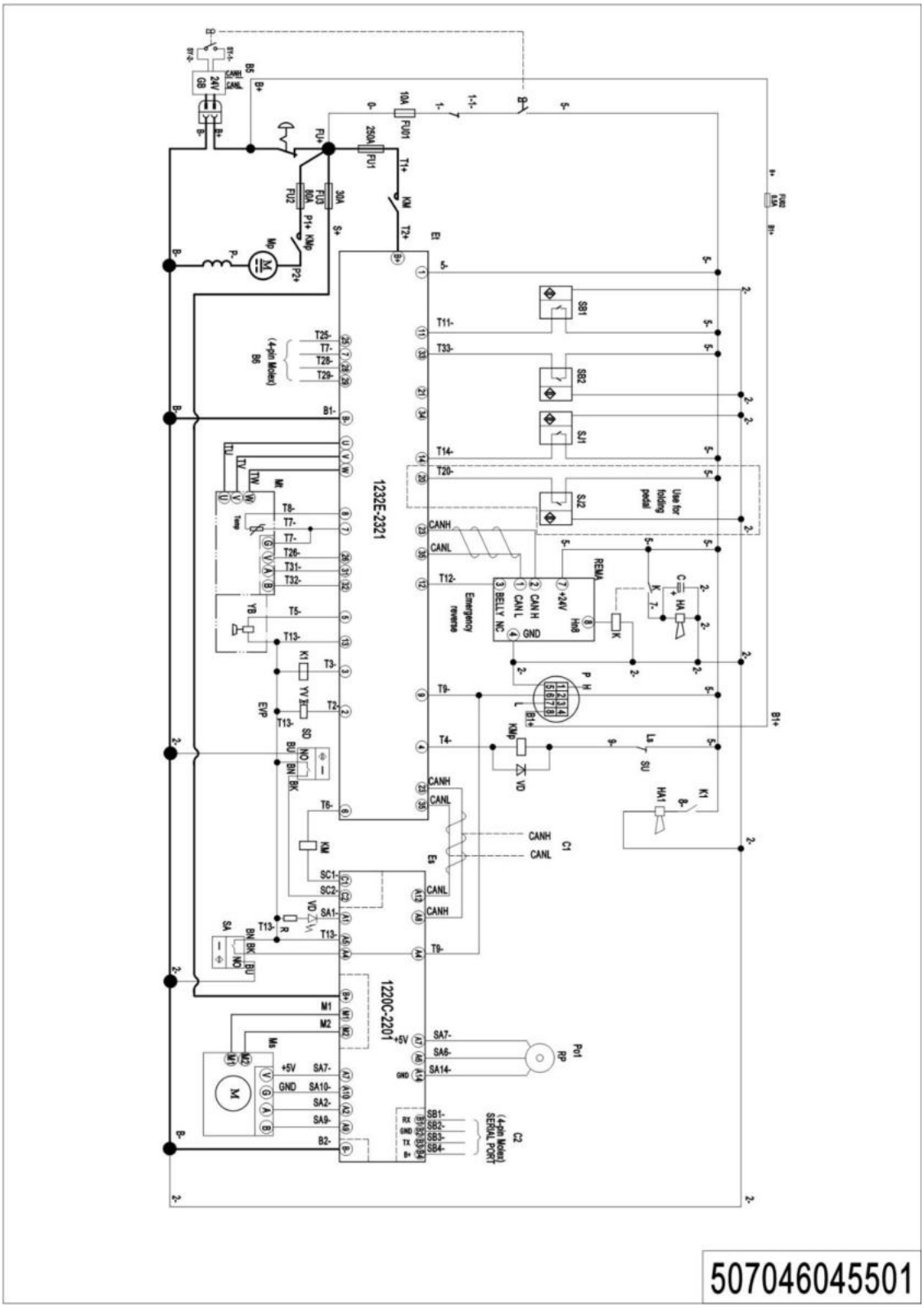

1=Supply as package; 2=Supply with limit; 3=Phasing out supply; 4=Supply as assembly; 5=Check other lists.

02 Electrical Circuit Diagram,PT20H QT (507046045502)

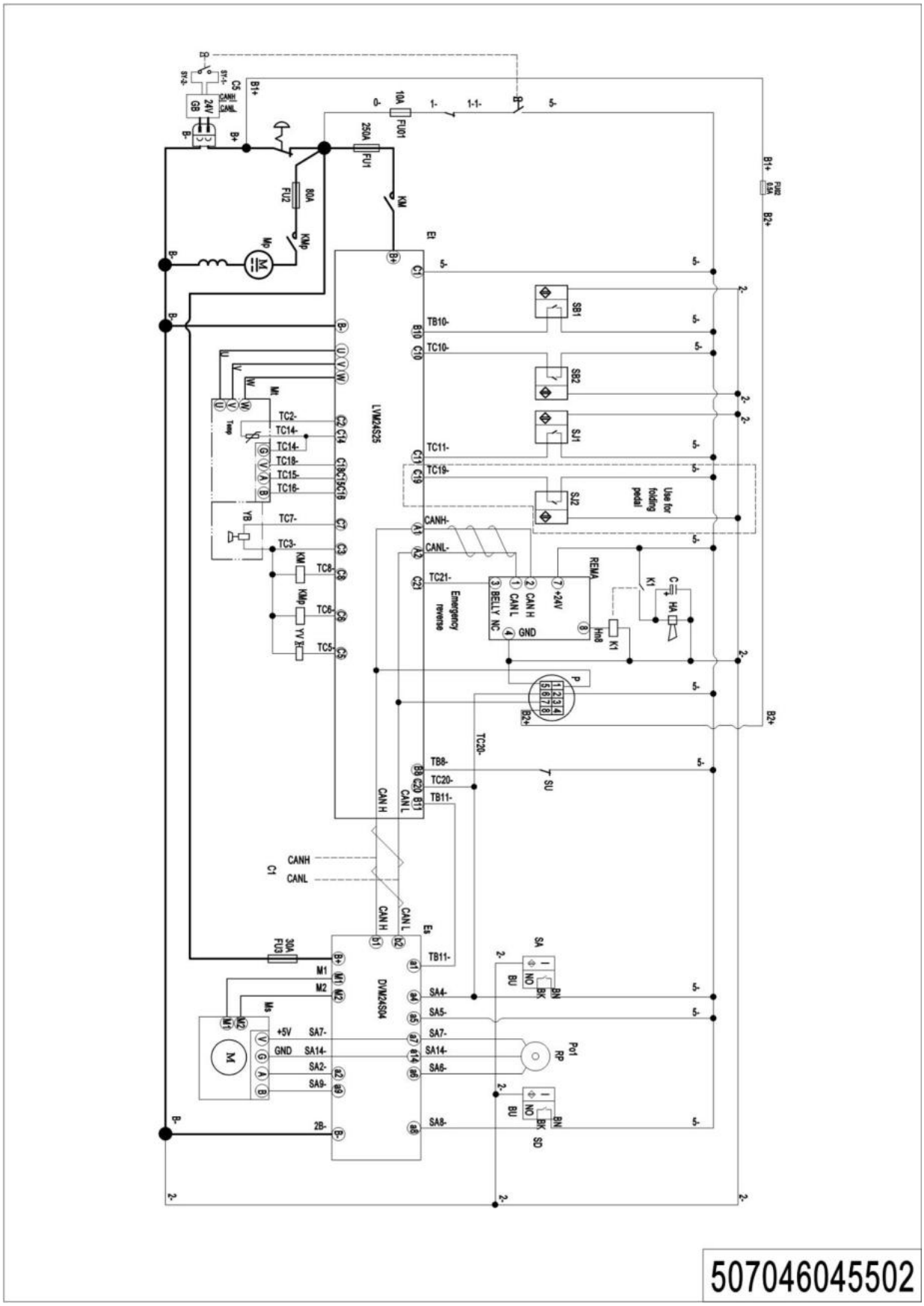

507046045502

1=Supply as package; 2=Supply with limit; 3=Phasing out supply; 4=Supply as assembly; 5=Check other lists.

03 Electrical Circuit Diagram,PT20HPLUS Curtis(507046045503)

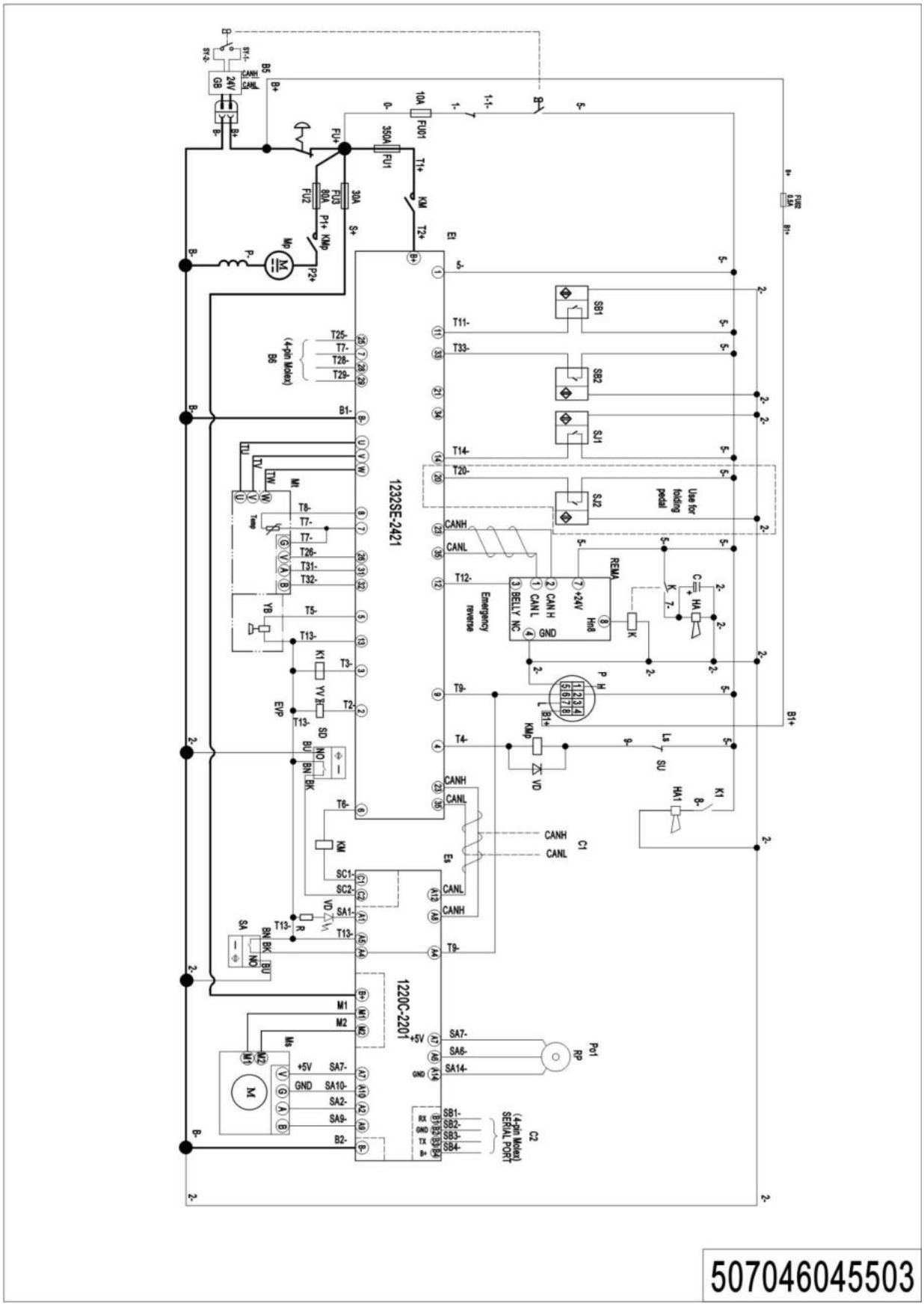

1=Supply as package; 2=Supply with limit; 3=Phasing out supply; 4=Supply as assembly; 5=Check other lists.

04 Electrical Circuit Diagram,PT20HPLUS QT（507046045504）

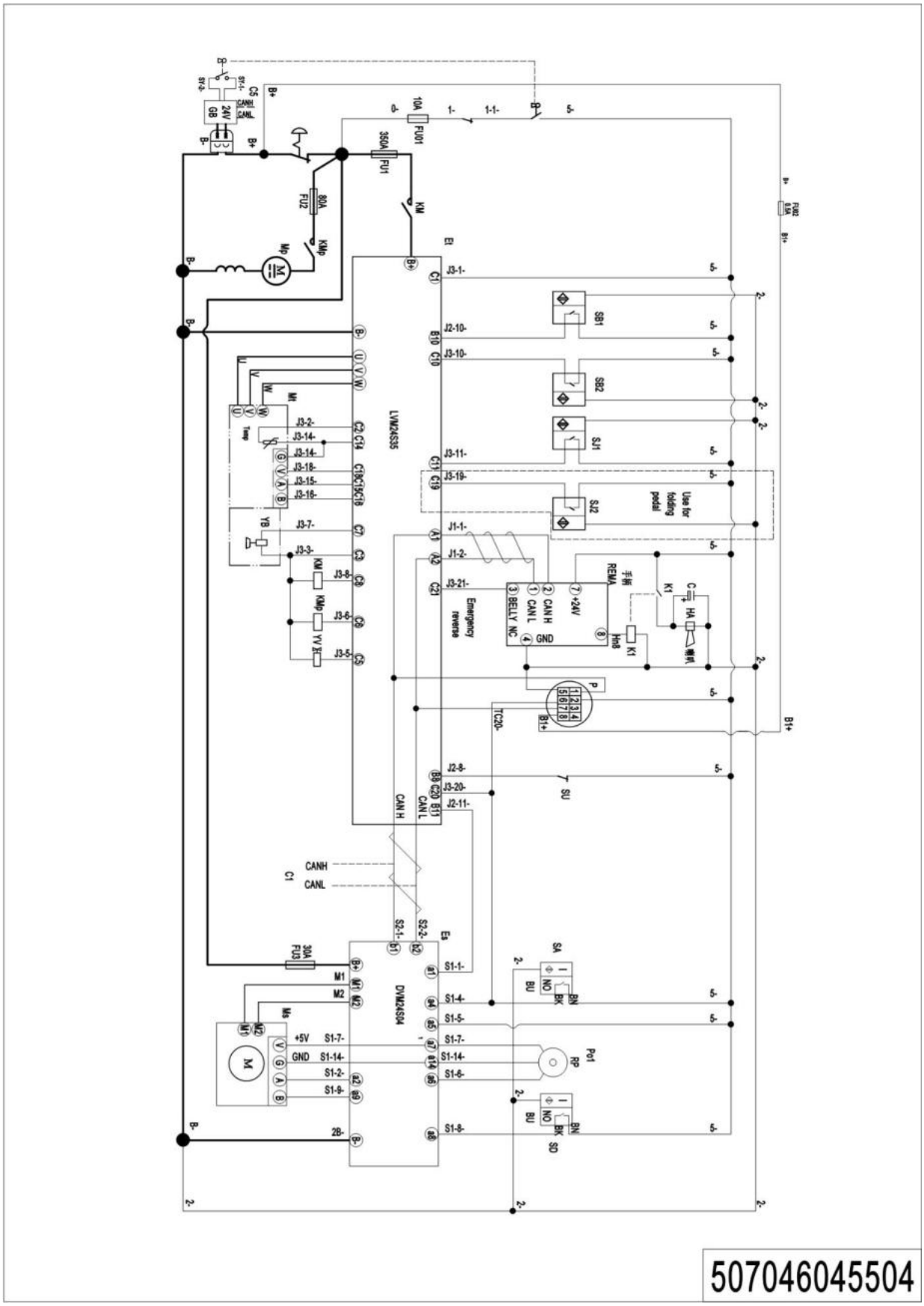

507046045504

1=Supply as package; 2=Supply with limit; 3=Phasing out supply; 4=Supply as assembly; 5=Check other lists.

05 Electrical Circuit Diagram,PT20HPLUS Curtis Manual（507046045505）

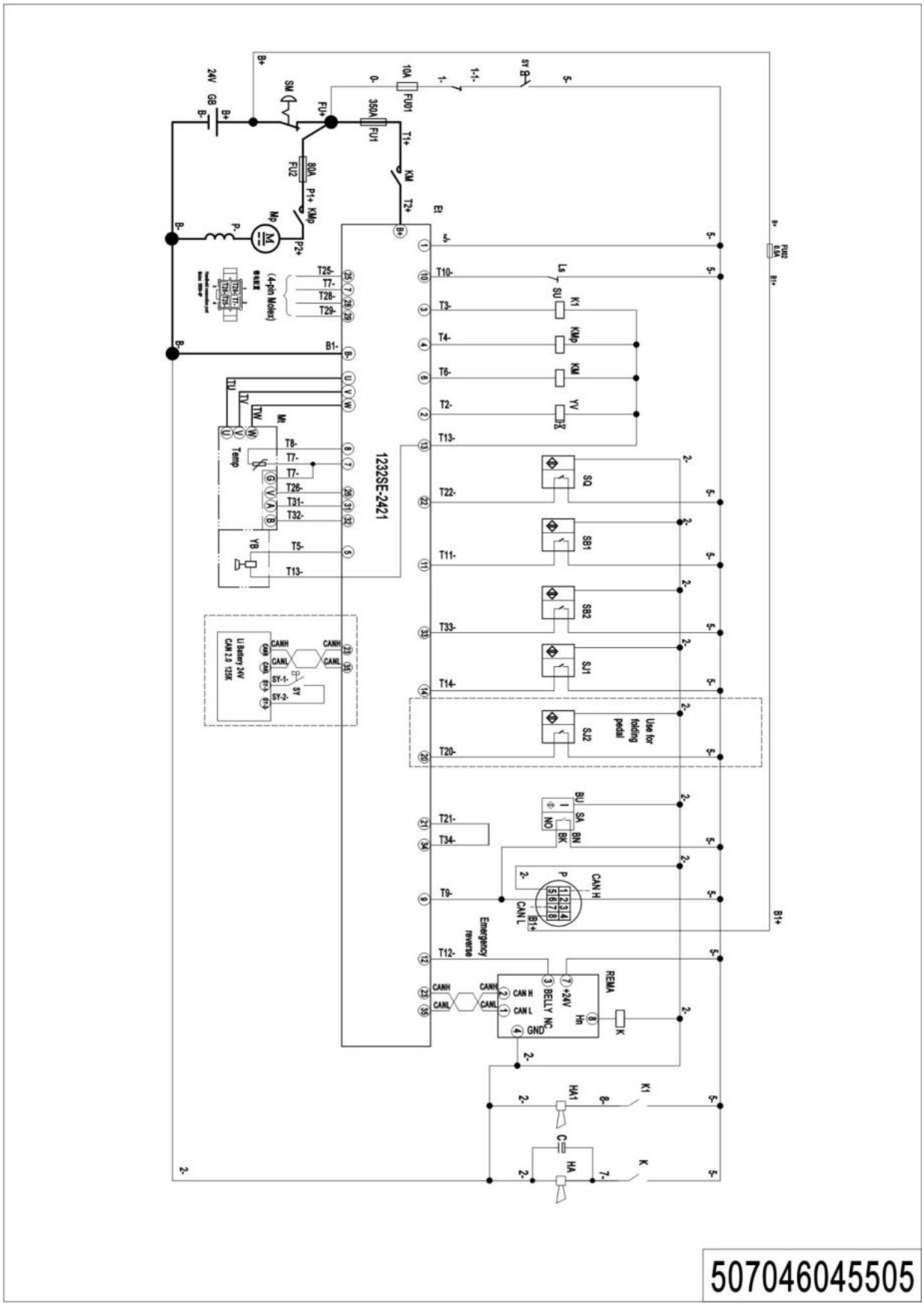

06 Electrical Circuit Diagram,PT20HPLUS QT .,Manual（507046045506）

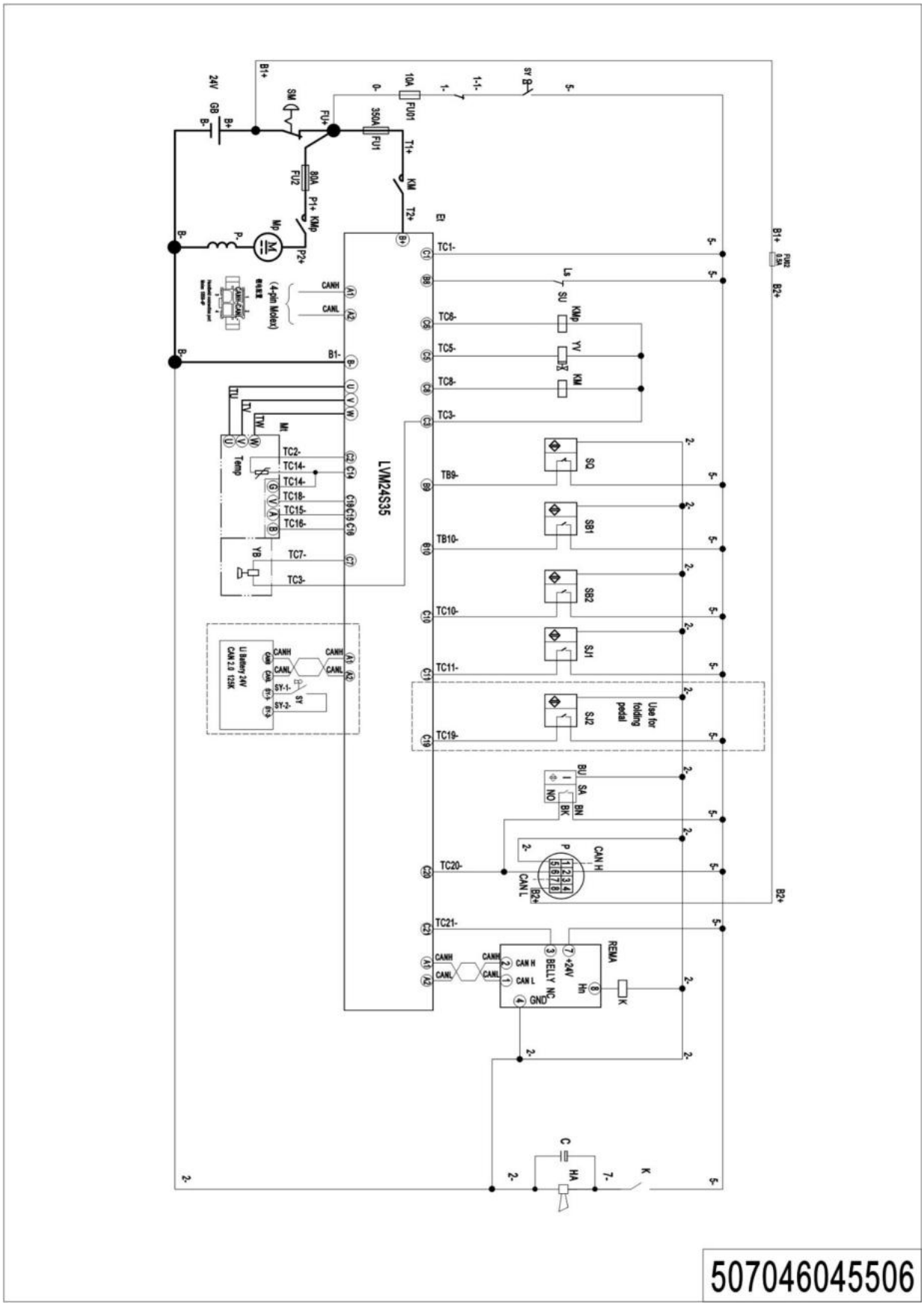

507046045506

1=Supply as package; 2=Supply with limit; 3=Phasing out supply; 4=Supply as assembly; 5=Check other lists.

07 Electrical Circuit Diagram,PT25H Curtis（507046045507）

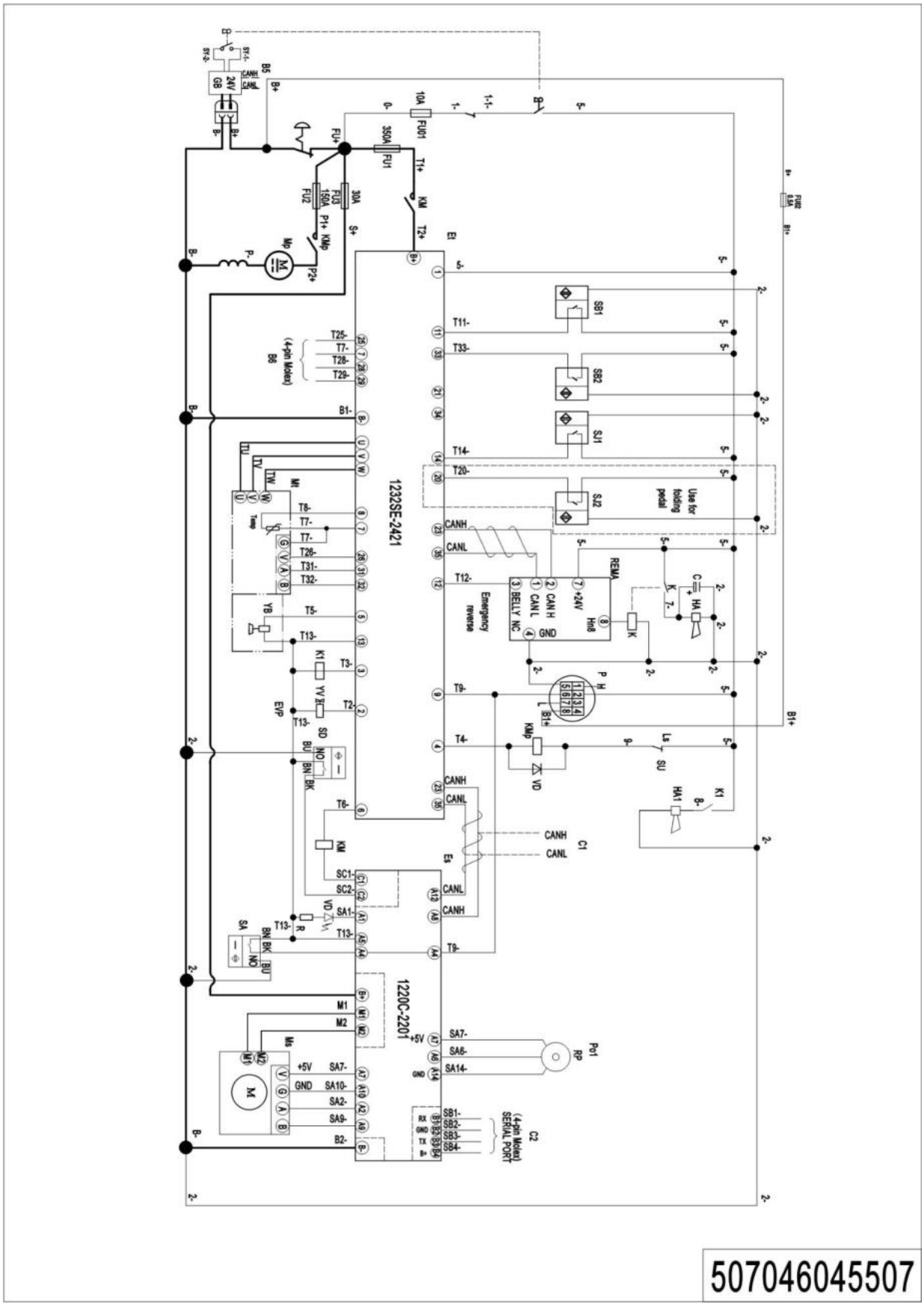

1=Supply as package; 2=Supply with limit; 3=Phasing out supply; 4=Supply as assembly; 5=Check other lists.

08 Electrical Circuit Diagram,PT25H QT（507046045508）

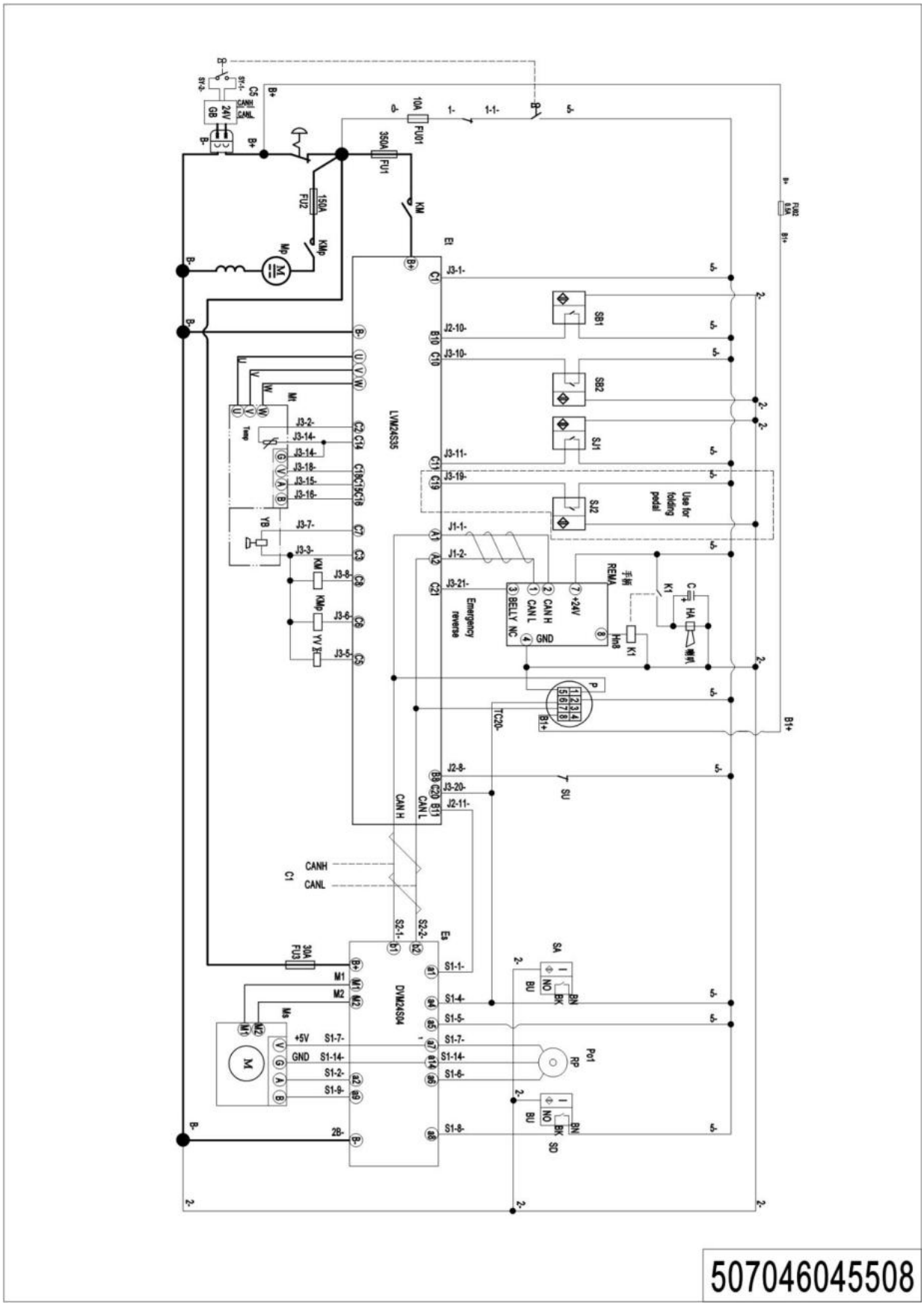

507046045508

1=Supply as package; 2=Supply with limit; 3=Phasing out supply; 4=Supply as assembly; 5=Check other lists.

09 Electrical Circuit Diagram,PT30H Curtis（507046045509）

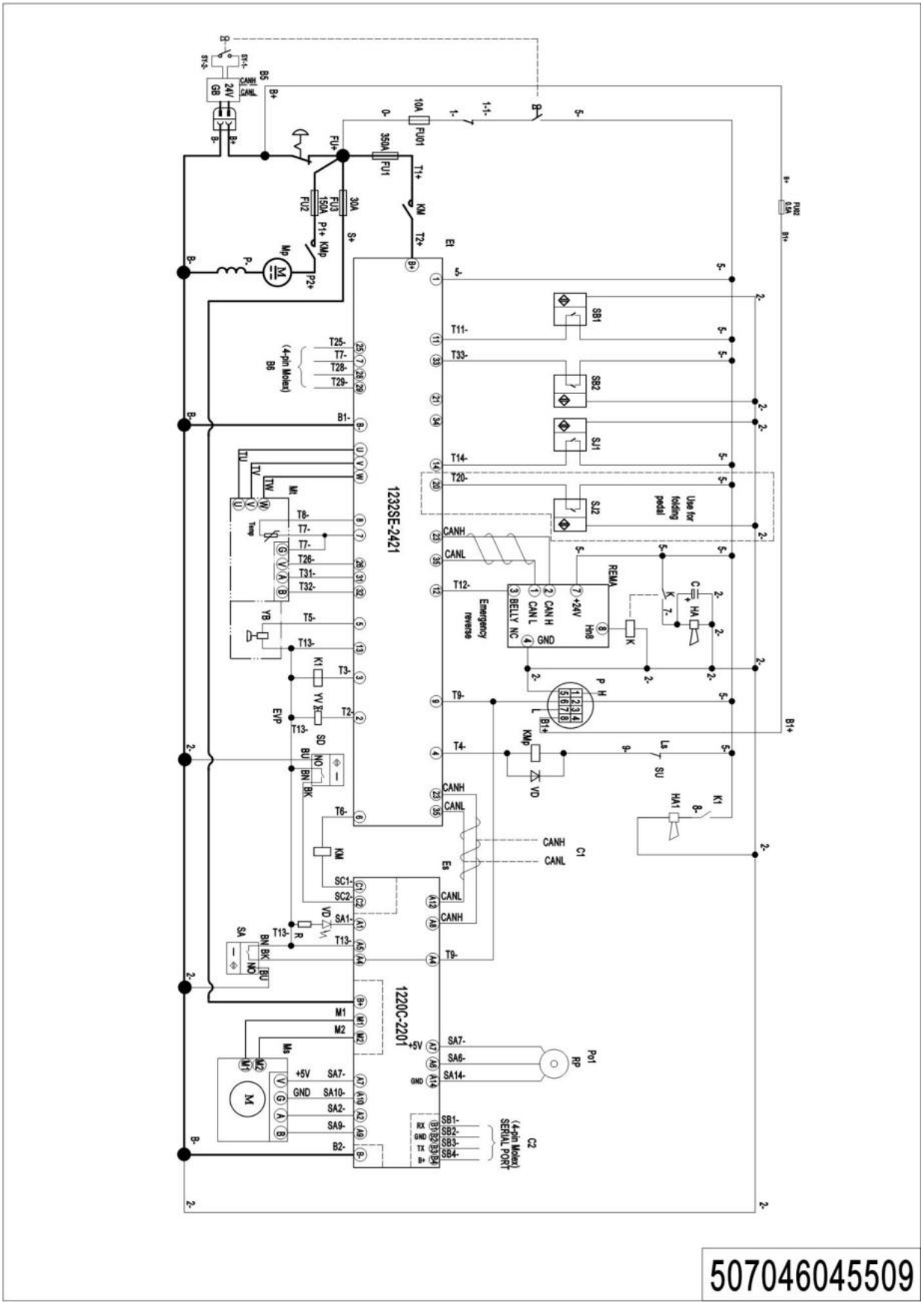

10 Electrical Circuit Diagram,PT30H QT（507046045510）

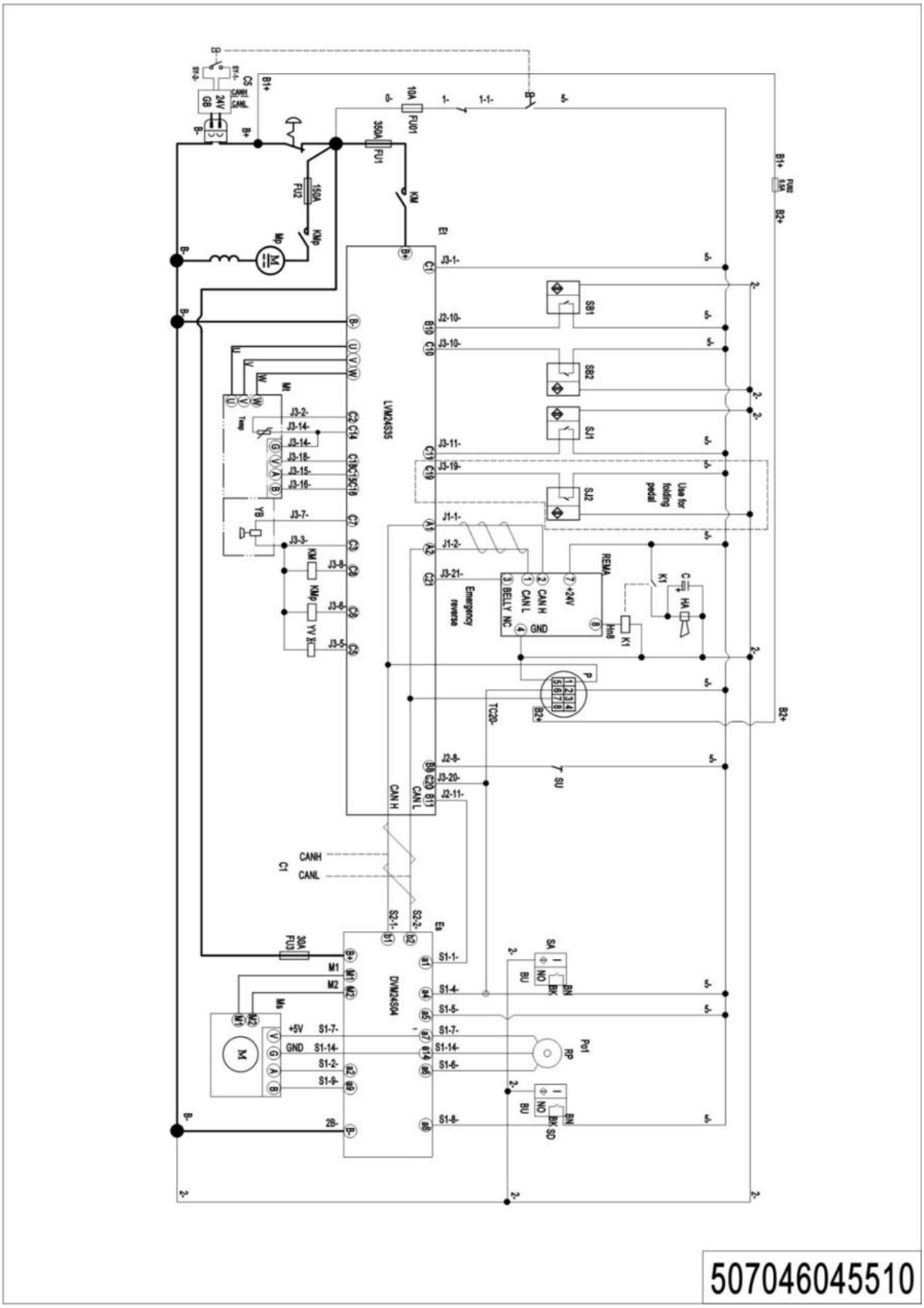

507046045510

1=Supply as package; 2=Supply with limit; 3=Phasing out supply; 4=Supply as assembly; 5=Check other lists.

11 Hydraulic schematic (507046045511)

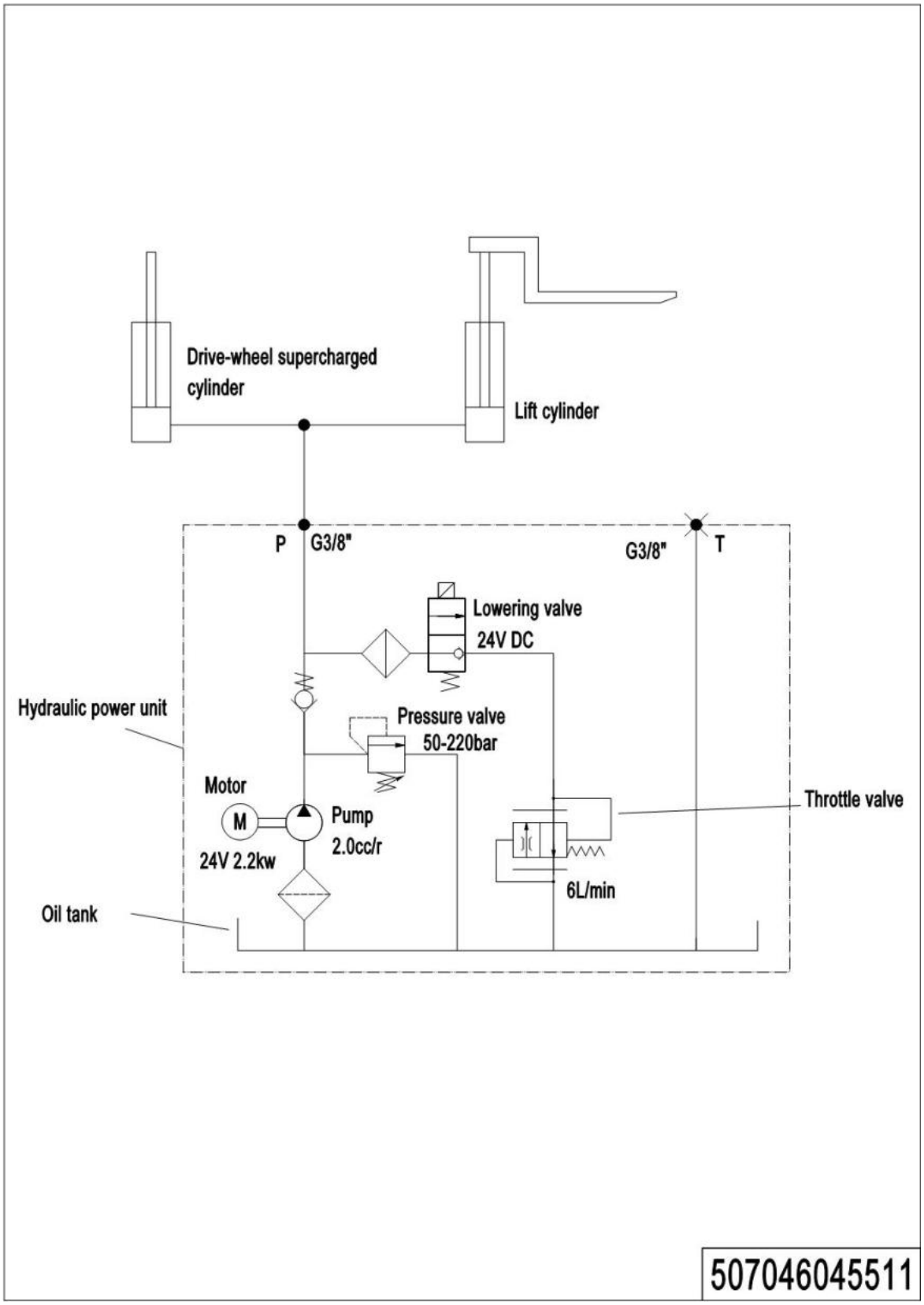

12 Consumable Parts List

No.	Item Code	Item Description	Qty.	Chapter/ Section/ Number
1	961001500014	WheelΦ250x80	1	Chapter 1/02/9
2	505798510001	Seal Kit	1	Chapter 2/01/13.02
3	506098510001	Seal Kit		Chapter 2/02/13.02
4	940300300048	WheelΦ82x82	4	Chapter 3/03/27.02
5	940400100039	Air Spring	1	Chapter 3/05/6
6	940400100001	Air Spring	1	Chapter 4/01/13
7	940400100045	Air Spring	1	Chapter 4/01/13
8	940300300044	WheelΦ124x60	2	Chapter 4/04/14.01
9	920100200002	Fuse	1	Chapter 5/04/2
10	920100100004	Fuse	1	Chapter 5/04/4
11	920100100007	Fuse	1	Chapter 5/04/4
12	920100100024	Fuse 250A	1	Chapter 5/04/5
13	920100100013	Fuse	1	Chapter 5/04/5

1=Supply as package; 2=Supply with limit; 3=Phasing out supply; 4=Supply as assembly; 5=Check other lists.