Print Number：　　Print Date：

NOBLELIFT

Electric Pallet Truck PT20Li

PARTS MANUAL

506646020101

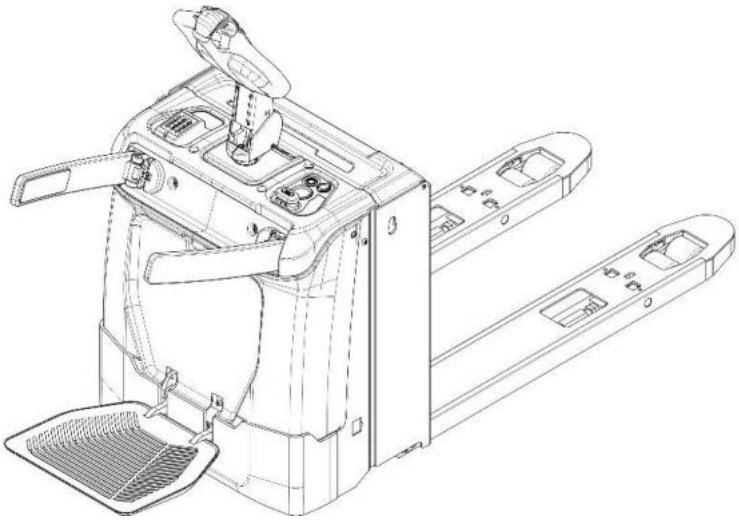

Version：V03

Truck Identification Number From：

Parts Manual

PT20Li-PM03EN

Please order spare parts from authorized dealers of Noblelift Intelligent Equipment Co., LTD.

In order to avoid wrong delivery, all the orders for spare parts should specify the following items:

- Truck model, identification number and manufacture year.
- Orders for spare parts of mast, hydraulic transmission unit, steering axle, motor, etc. shall indicate the manufacture number of these parts.
- Codes for Noblelift spare parts are shown in the table of parts manual. Please also pay attention to the description of supply status, order quantity, etc. (check the number listed in "Mark" column of the parts manual).

"Mark" Column:

The unmarked indicates the parts are in short supply cycle.

Number 1: supply as package. Indicating these that parts are small parts and seal parts, which are supplied in package unit and in short supply cycle.

Number 2: supply with constraints. Indicating that these spare parts are not in stock and will be prepared for production after receiving the order from customers, which are in long supply cycle.

Number 3: phasing-out supply. Indicating that these parts will be replaced by new parts due to technical improvements and the current stock will not be available when these parts run out. Please check the description of technical improvements notice.

Number 4: supply as assembly. Indicating that these parts are assembly parts defined by manufacture process, which cannot be supplied as a single part.

Number 5: check other tables.

This parts manual is the property of Noblelift and can be shared under the confidential agreement only, Noblelift has the right to claim for compensation of any unauthorized use. Copy without permission is not allowed. Figures in the manual are not limited by the original design. Noblelift Intelligent Equipment Co., LTD reserves the right to improve the products for continuous technology progress.

Table of Contents

Chapter 1: Drive System....1
01 Drive Unit Steering (506646013501)....1
02 Drive Unit-EPS (506746013504)....3
Chapter 2: Hydraulic System....5
01 Hydraulic Components (506646024001)....5
02 Hydraulic Unit (566546024002)....7
Chapter 3: Truck Frame....9
01 Chassis (506646038501)....9
01 Chassis (506646038501) Continuation....11
02 Chassis (506646038502)....13
02 Chassis (506646038502) Continuation....15
03 Truck Frame (506646021501)....17
04 Guard Arm (506646017501)....19
04 Guard Arm (506646017501) Continuation....21
05 Platform (506646018001)....23
06 Battery cover (506646021001)....25
07 Caster (505646016501)....27
Chapter 4: Steering System, Braking System, Wheels....29
01 Operating panel (506646010001)....29
02 Tiller Unit (535946011001)....31
03 Control Handle (566546010002)....33
Chapter 5: Electrical Parts....35
01 Wire Harness (506646033001)....35
02 Controller (536646033002)....37
03 Charger (502546036501)....39
04 Lithium battery (506646037001)....41
Chapter 6: Others....43
01 Labels，Decals-US (506646047001)....43
02 Labels，Decals-EU (506646047002)....45
Appendix....47
01 Electrical Circuit Diagram (506646045501)....47
02 Hydraulic Circuit Diagram (508046045502)....48
03 Consumable Parts List....49

Chapter 1: Drive System

01 Drive Unit Steering (506646013501)

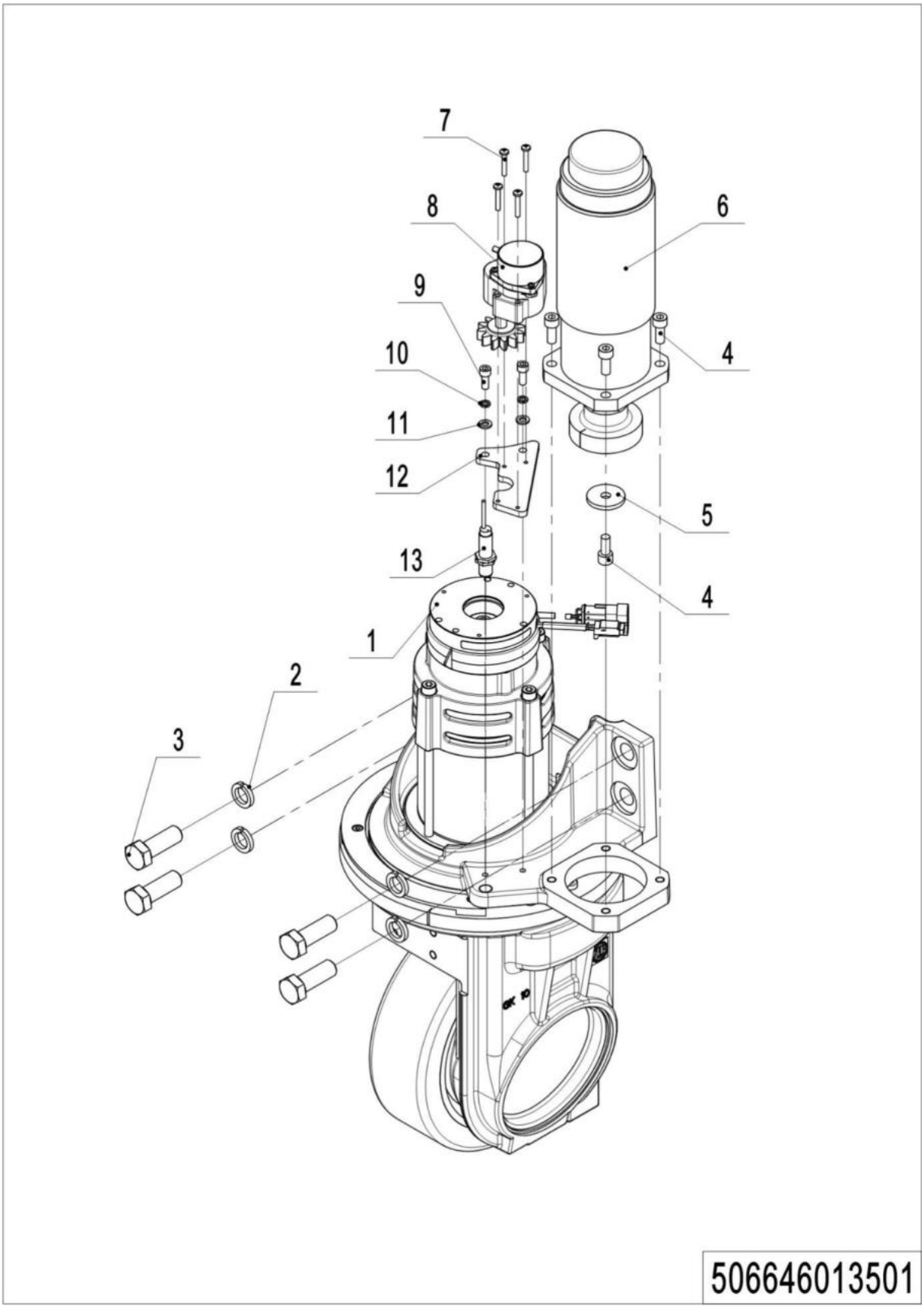

1= Supply as package. 2= Supply with constraints. 3= Phasing-out supply. 4= Supply as assembly. 5= Check other tables.

01 Drive Unit Steering（506646013501）

No.	Item Code	Mark	Item Description	Qty.	Substitute	Note
1	940900500009		Steering Unit	1		
2	910400500010		Spring Washer	4		
3	910100300071		Bolt	4		
4	910200200057		Screw	5		
5	506713520001		Retaining Ring	1		
6	920900100069		Motor	1		
7	910200500027		Screw	4		
8	921800100043		Sensor	1		
9	910200400017		Screw	2		
10	910400500005		Spring Washer	2		
11	910400100005		Flat Washer	2		
12	506633520000		Mounting Plate	1		
13	920200400002		Proximity Switch	1		

1= Supply as package. 2= Supply with constraints. 3= Phasing-out supply. 4= Supply as assembly. 5= Check other tables.

02 Drive Unit-EPS (506746013504)

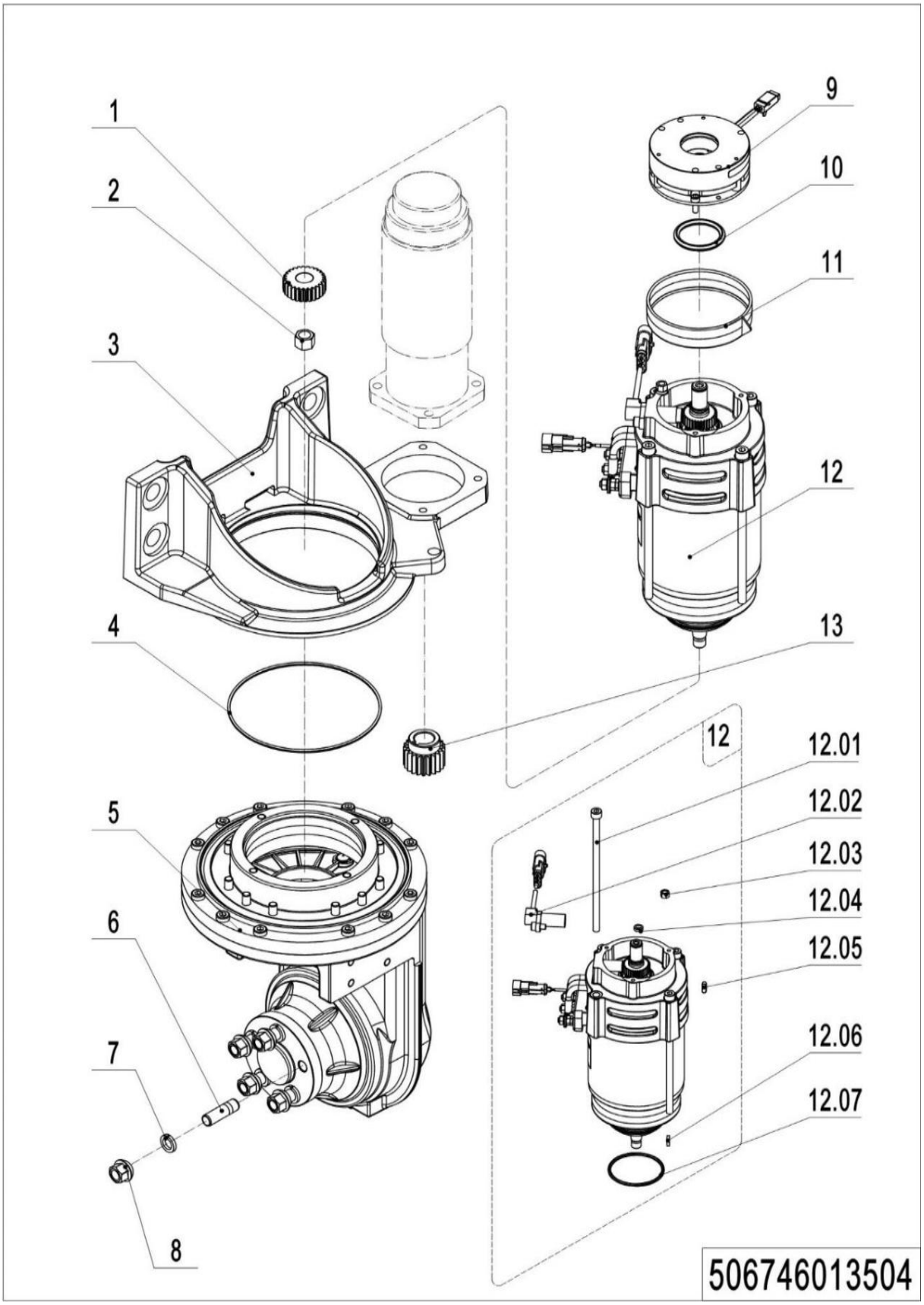

1= Supply as package. 2= Supply with constraints. 3= Phasing-out supply. 4= Supply as assembly. 5= Check other tables.

02 Drive Unit-EPS（506746013504）

No.	Item Code	Mark	Item Description	Qty.	Substitute	Note
--	940900500009		Steering Unit	1		
1	535998520014	2	Gear	1		
2	535998520008	2	Nut	1		
3	506798510006	2	Mounting Base	1		
4	535998520009	2	O-Ring	1		
5	535998510005	2	Gearbox Assembly	1		
6	535998520011	2	Bolt	5		
7	535998520012	2	Washer	5		
8	535998520013	2	Nut	5		
9	535998510001	2	Brake	1		
10	535998520000	2	Locating Ring	1		
11	535998520001	2	Division Plate	1		
12	535998510003	2	Motor	1		
12.01	535998520002	2	Screw	1		
12.02	535998510002	2	Sensor	1		
12.03	535998520003	2	Nut	1		
12.04	535998520004	2	Safety Element	1		
12.05	535998520005	2	Feather Key	1		
12.06	535998520006	2	Key	1		
12.07	535998520007	2	O-Ring	1		
13	535998520017	2	Gear	1		

Chapter 2: Hydraulic System

01 Hydraulic Components (506646024001)

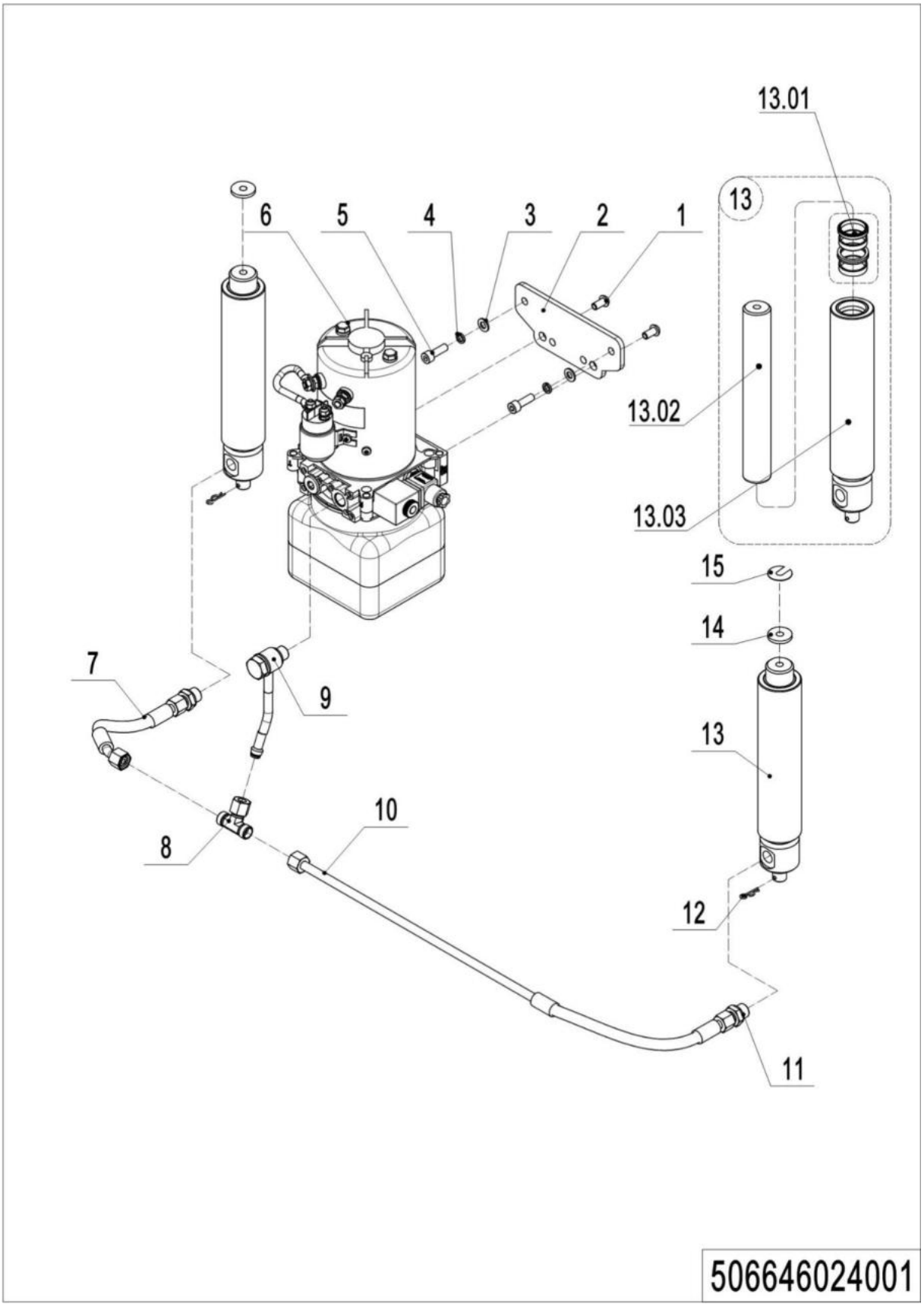

1= Supply as package. 2= Supply with constraints. 3= Phasing-out supply. 4= Supply as assembly. 5= Check other tables.

01 Hydraulic Components（506646024001）

No.	Item Code	Mark	Item Description	Qty.	Substitute	Note
1	941100100005		Screw	2		
2	506624020000		Plate	1		
3	910400100006		Flat Washer	2		
4	910400500006		Spring Washer	2		
5	910200200057		Screw	2		
6	950900100130		Pump Unit	1		
7	506624010001		Hose	1		
8	950400700002		Joint	1		
9	506624010003		Hose	1		
10	506624010002		Hose	1		
11	950400400003		Joint	2		
12	910601000004		Lock Pin	2		
13	506624010000		Cylinder	2		
13.01	506698510000		Seal Kit	1		
13.02	506624020100		Plunger rod	1		
13.03	506624010100		Cylinder Block	1		
14	506624020001		Hoop	2		
15	506624020002		Hoop	2		

1= Supply as package. 2= Supply with constraints. 3= Phasing-out supply. 4= Supply as assembly. 5= Check other tables.

02 Hydraulic Unit (566546024002)

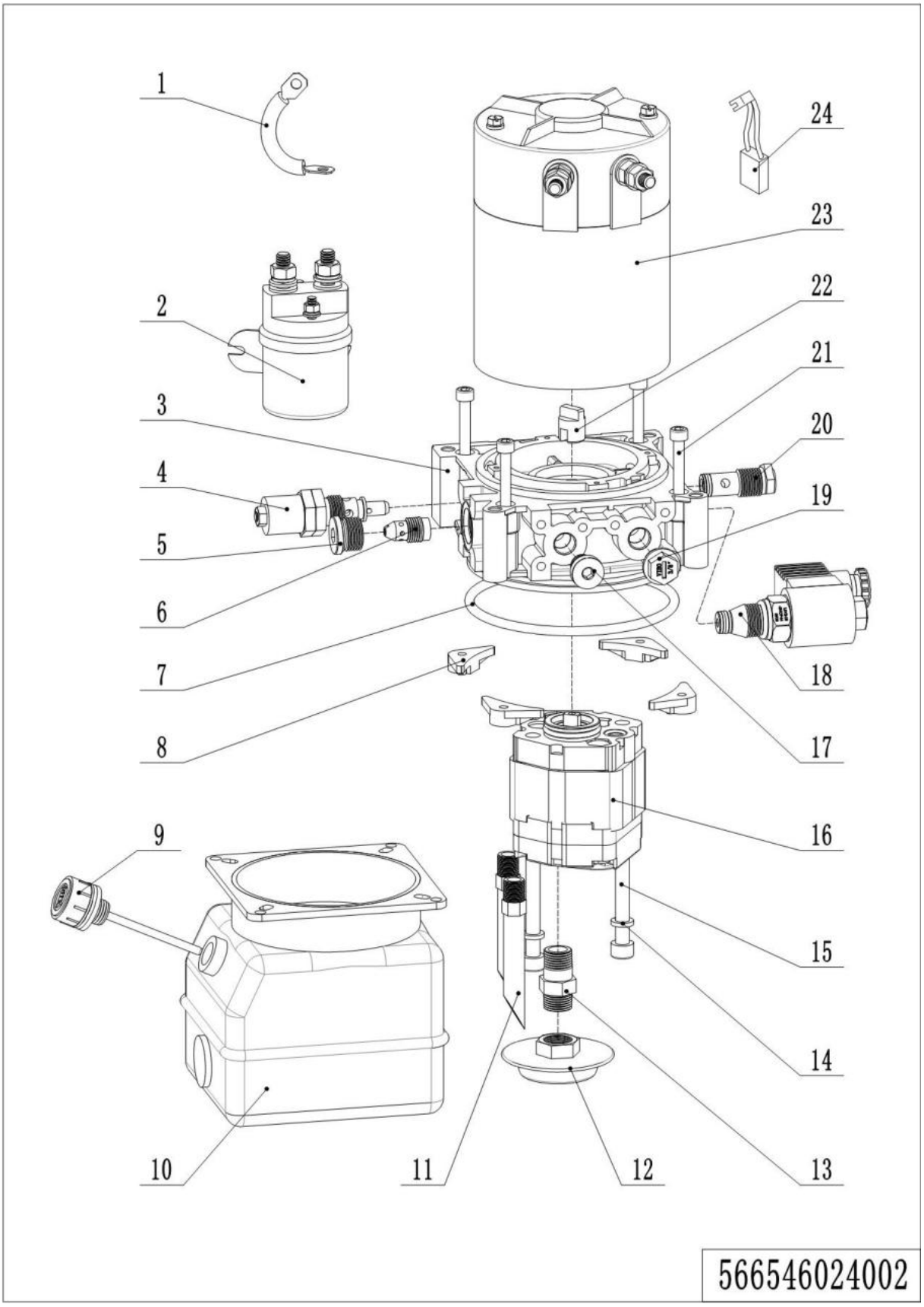

1= Supply as package. 2= Supply with constraints. 3= Phasing-out supply. 4= Supply as assembly. 5= Check other tables.

02 Hydraulic Unit（566546024002）

No.	Item Code	Mark	Item Description	Qty.	Substitute	Note
1	505798510004		Cables	1		
2	532098510002		Switch	1		
3	505798520005		Valve Block	1		
4	505798510007		Overflow Valve	1		
5	402698520020		Plug	1		
6	505798510006		Compensation Valve	1		
7	910800100088		O-Ring	1		
8	505798520008		Nut	4		
9	505698520047		Cap-Tank	1		
10	505798520009		Tank	1		
11	505798520012		Pipe	2		
12	402698520010		Filter	1		
13	505798520010		Oil Tube	1		
14	910400500006		Spring Washer	2		
15	910200200070		Screw	2		
16	532098510000		Gear Pump	1		
17	505798520014		End Cap	1		
18	532098510006		Magnetic Valve	1		
19	505798520015		End Cap	1		
20	505798510012		Check Valve	1		
21	910200200042		Screw	4		
22	505798520018		Coupling	1		
23	532098510001		Motor	1		
24	505798510013		Carbon Brush	4		

Chapter 3: Truck Frame

01 Chassis (506646038501)

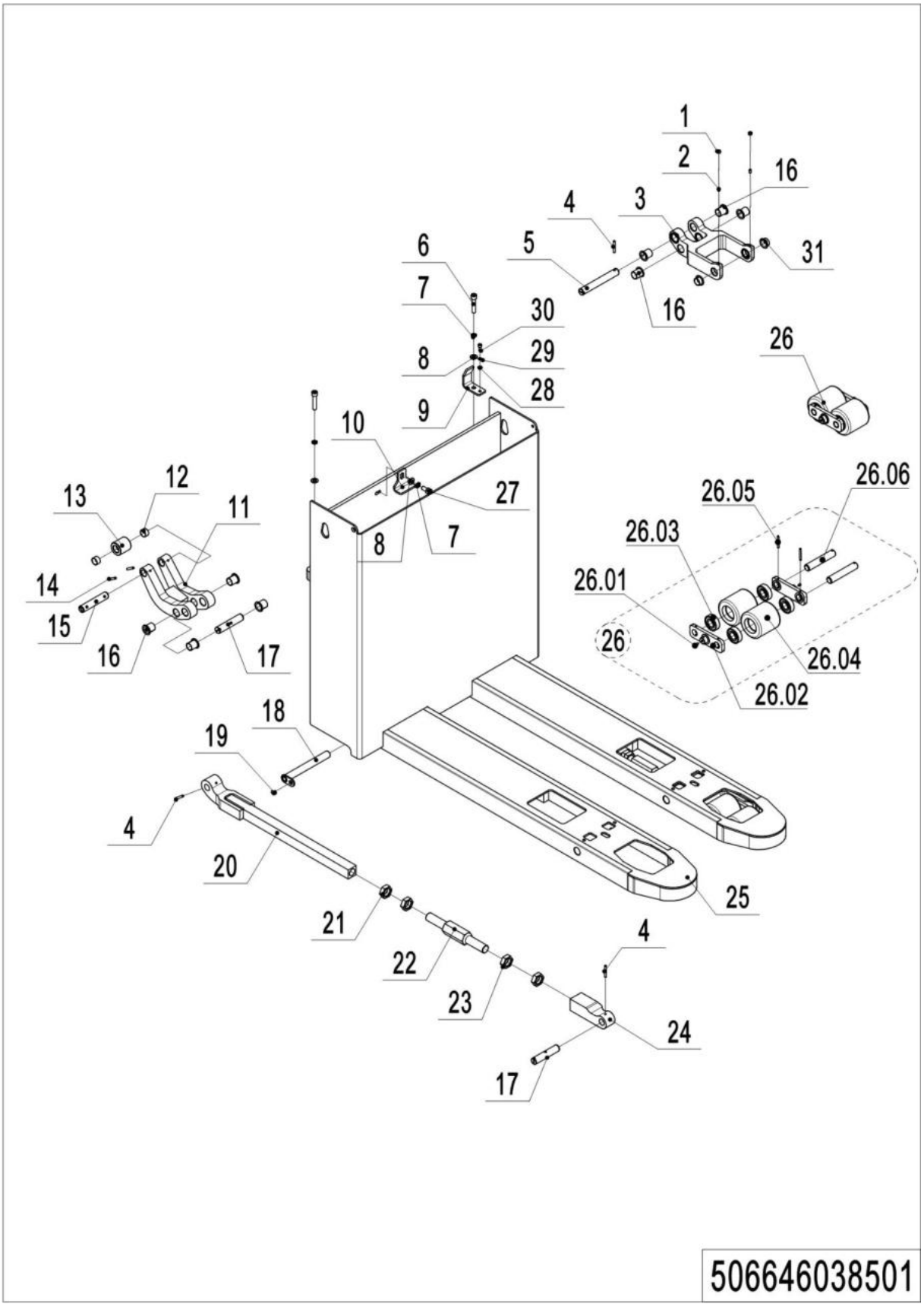

1= Supply as package. 2= Supply with constraints. 3= Phasing-out supply. 4= Supply as assembly. 5= Check other tables.

01 Chassis （506646038501）

No.	Item Code	Mark	Item Description	Qty.	Substitute	Note
1	910300100005		Nut	4		
2	910200800011		Screw	4		
3	566538520049		Riser	2		
4	910600400028		Spring Pin	6		
5	566538520054		Axle	2		
6	910200200082		Screw	2		
7	910400500007		Spring Washer	2		
8	910400100007		Flat Washer	3		
9	506638520019		Stop Plate	1		
10	506638520022		Stop Plate	1		
11	566538520068		Rib Plate	2		
12	940500100012		Bushing	4		
13	566538520056		Roller	2		
14	910600400025		Spring Pin	4		
15	566538520055		Axle	2		
16	940500200042		Bushing	16		
17	566538520053		Axle	4		
18	507038510006		Pin	1		
19	910200400013		Screw	2		
20	506638510001		Rod	2		
21	910300400011		Nut	4		
22	566538520033		Adjusting Rod	2		
23	910300400015		Nut	4		
24	507038520027		Link Block	2		
25	506638510000		Chassis(540x1150)	1		
26	566517001000		Wheel	2		
26.01	911200100001		Oil Cup	4		
26.02	566517020000		Connecting Plate	4		
26.03	910700200019		Bearing	8		
26.04	940300300008		WheelΦ82x82	4		

01 Chassis (506646038501) Continuation

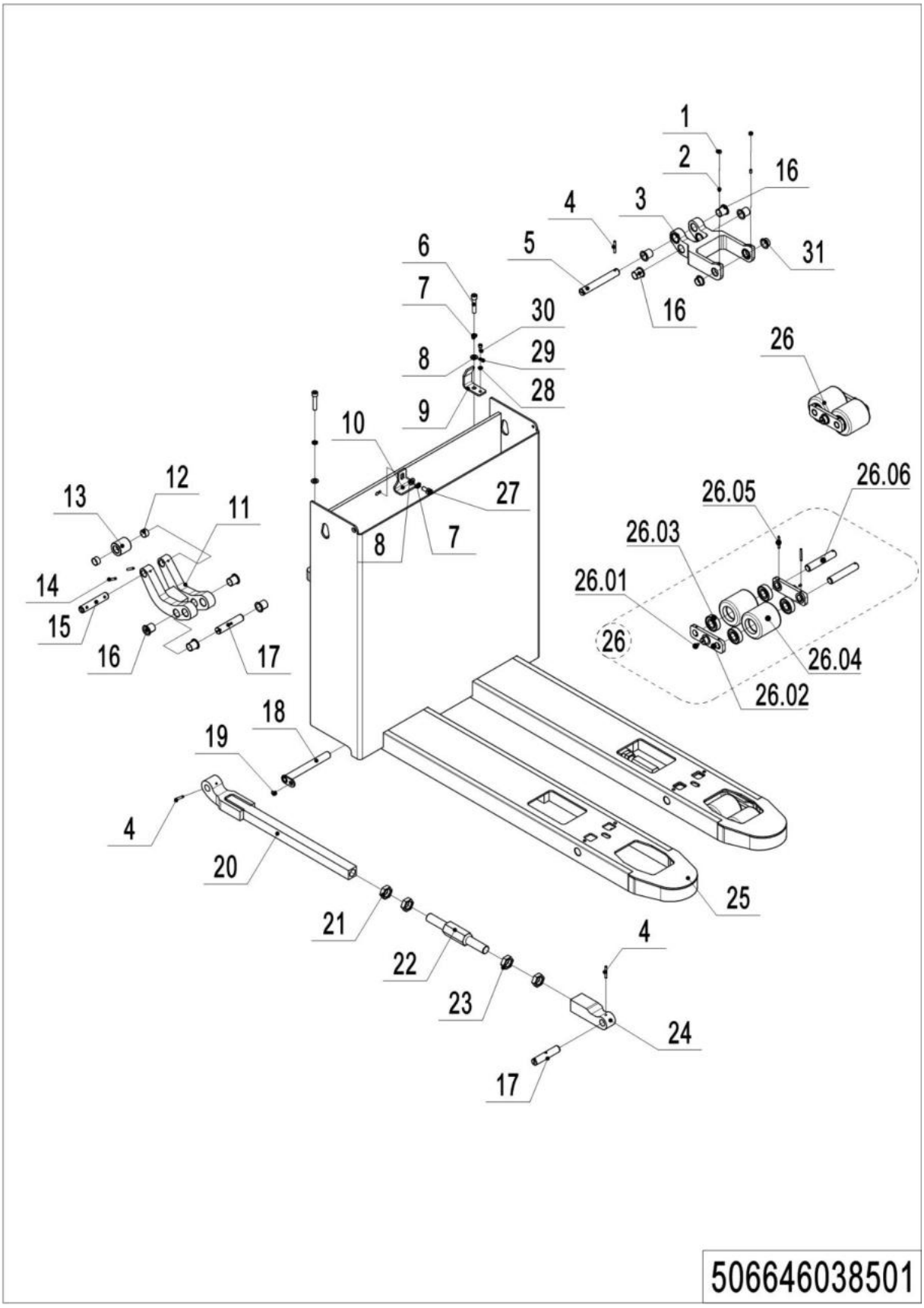

01 Chassis（506646038501）Continuation

No.	Item Code	Mark	Item Description	Qty.	Substitute	Note
26.05	910600500005		Spring Pin	4		
26.06	505617020000		Axle	4		
27	910200200075		Screw	1		
28	910400100005		Flat Washer	1		
29	910400500018		Spring Washer	1		
30	910200200146		Screw	1		
31	940500200040		Bushing	4		

02 Chassis (506646038502)

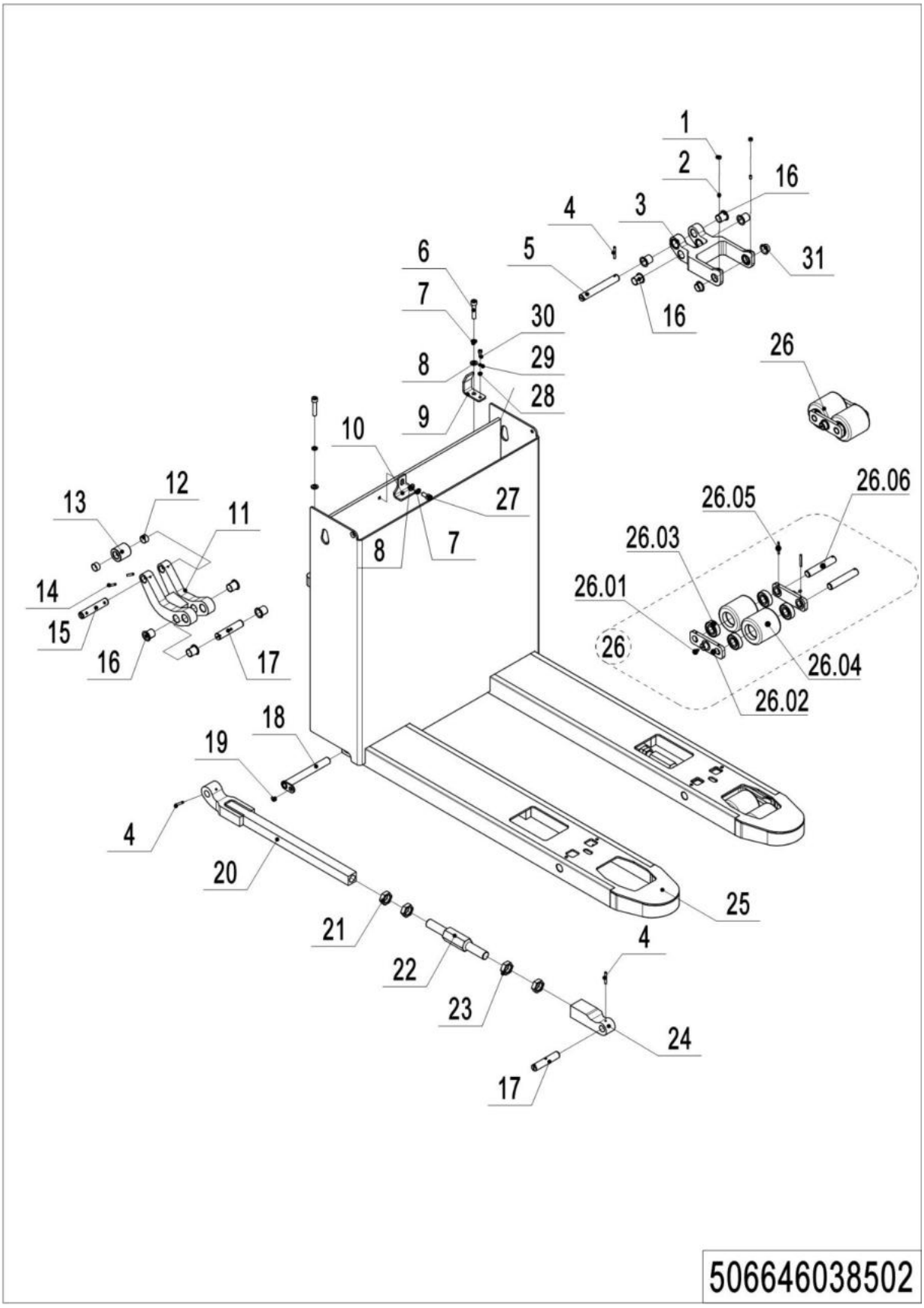

02 Chassis （506646038502）

No.	Item Code	Mark	Item Description	Qty.	Substitute	Note
1	910300100005		Nut	4		
2	910200800011		Screw	4		
3	566538520049		Riser	2		
4	910600400028		Spring Pin	6		
5	566538520054		Axle	2		
6	910200200082		Screw	2		
7	910400500007		Spring Washer	2		
8	910400100007		Flat Washer	3		
9	506638520019		Stop Plate	1		
10	506638520022		Stop Plate	1		
11	566538520068		Rib Plate	2		
12	940500100012		Bushing	4		
13	566538520056		Roller	2		
14	910600400025		Spring Pin	4		
15	566538520055		Axle	2		
16	940500200042		Bushing	16		
17	566538520053		Axle	4		
18	507038510006		Pin	1		
19	910200400013		Screw	2		
20	506638510001		Rod	2		
21	910300400011		Nut	4		
22	566538520033		Adjusting Rod	2		
23	910300400015		Nut	4		
24	507038520027		Link Block	2		
25	506638510010		Chassis(685x1150)	1		
26	566517001000		Wheel	2		
26.01	911200100001		Oil Cup	4		
26.02	566517020000		Connecting Plate	4		
26.03	910700200019		Bearing	8		
26.04	940300300008		WheelΦ82x82	4		

02 Chassis (506646038502) Continuation

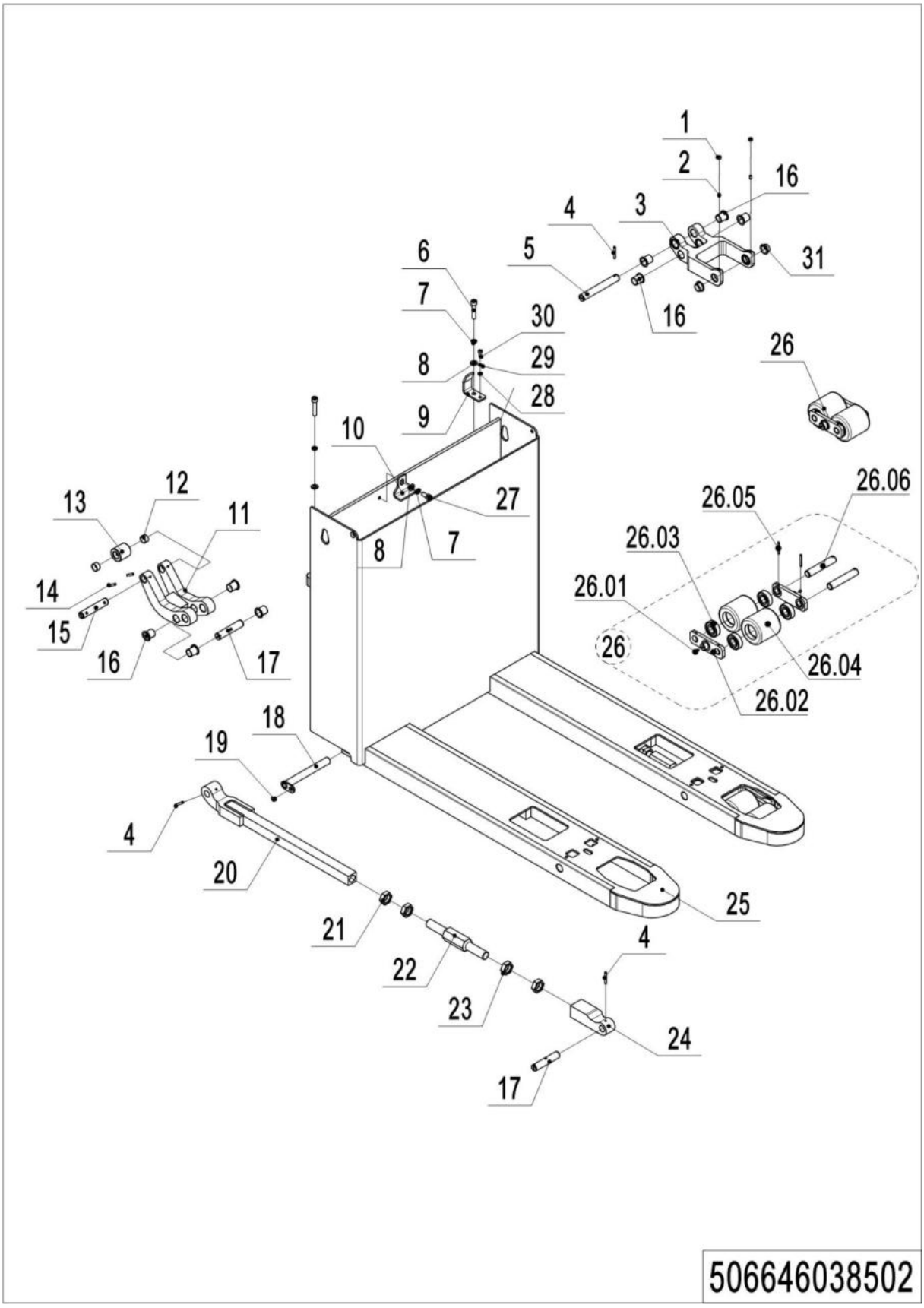

02 Chassis（506646038502）Continuation

No.	Item Code	Mark	Item Description	Qty.	Substitute	Note
26.05	910600500005		Spring Pin	4		
26.06	505617020000		Axle	4		
27	910200200075		Screw	1		
28	910400100005		Flat Washer	1		
29	910400500018		Spring Washer	1		
30	910200200146		Screw	1		
31	940500200040		Bushing	4		

03 Truck Frame (506646021501)

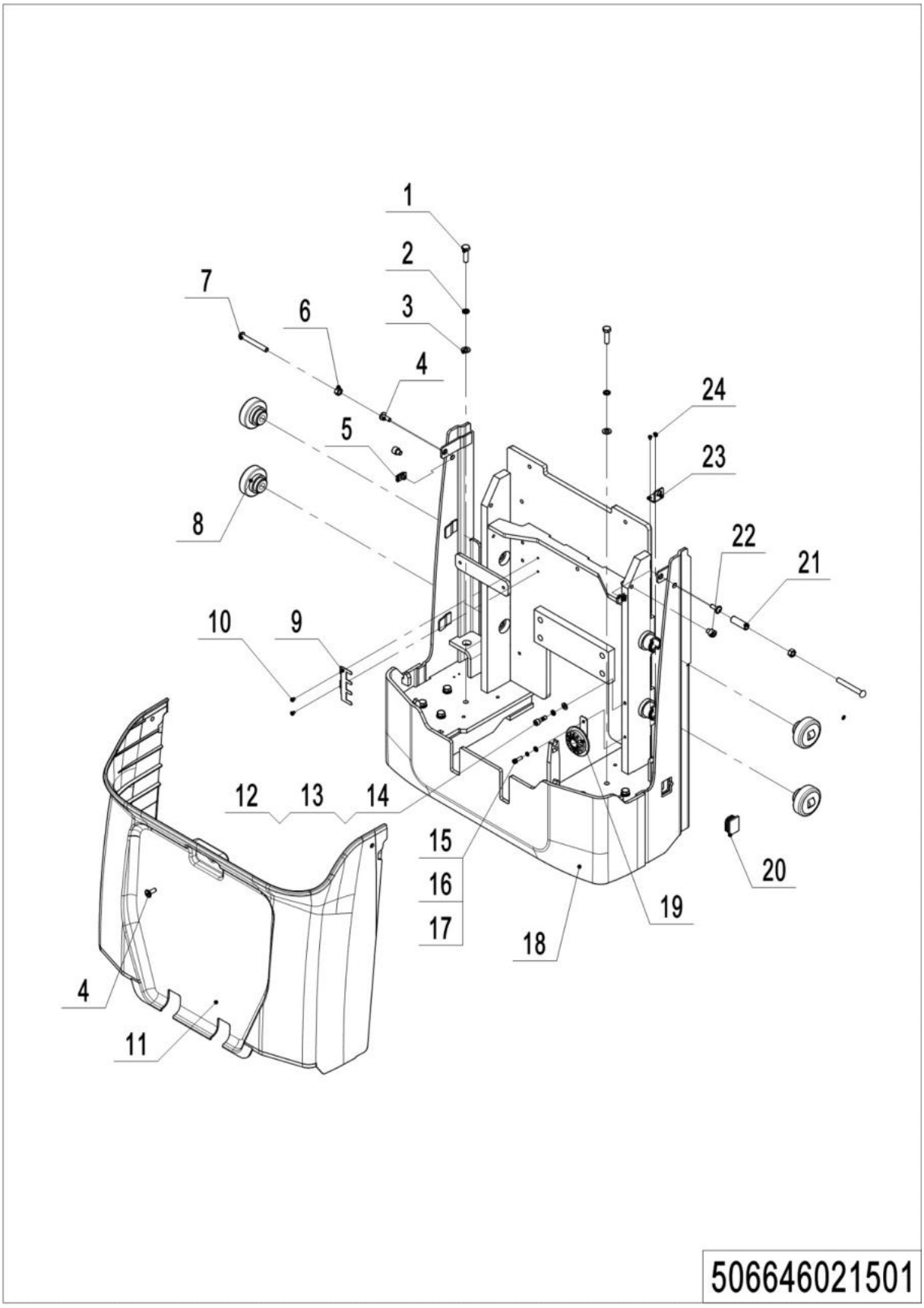

1= Supply as package. 2= Supply with constraints. 3= Phasing-out supply. 4= Supply as assembly. 5= Check other tables.

03 Truck Frame（506646021501）

No.	Item Code	Mark	Item Description	Qty.	Substitute	Note
1	910100300038		Bolt	8		
2	910400500007		Spring Washer	8		
3	910400100007		Flat Washer	8		
4	941100100011		Screw	3		
5	940400400002		Cage Nut	2		
6	910300100007		Nut	2		
7	910200300045		Screw	2		
8	940200300003		Compound Roller	4		
9	921300300022		Mounting Plate	1		
10	910200500035		Screw	2		
11	506621520099		Protective Cover	1		
12	910200200055		Screw	2		
13	910400500006		Spring Washer	2		
14	910400100006		Flat Washer	2		
15	910200200035		Screw	1		
16	910400500005		Spring Washer	1		
17	910400100005		Flat Washer	1		
18	506621510000		Chassis	1		
19	920500100001		Horn	1		
20	506621520022		Dust Cap	1		
21	506621520018		Spacer Bush	1		
22	910200200071		Screw	2		
23	921300300003		Holder	1		
24	910200500020		Screw	2		

04 Guard Arm (506646017501)

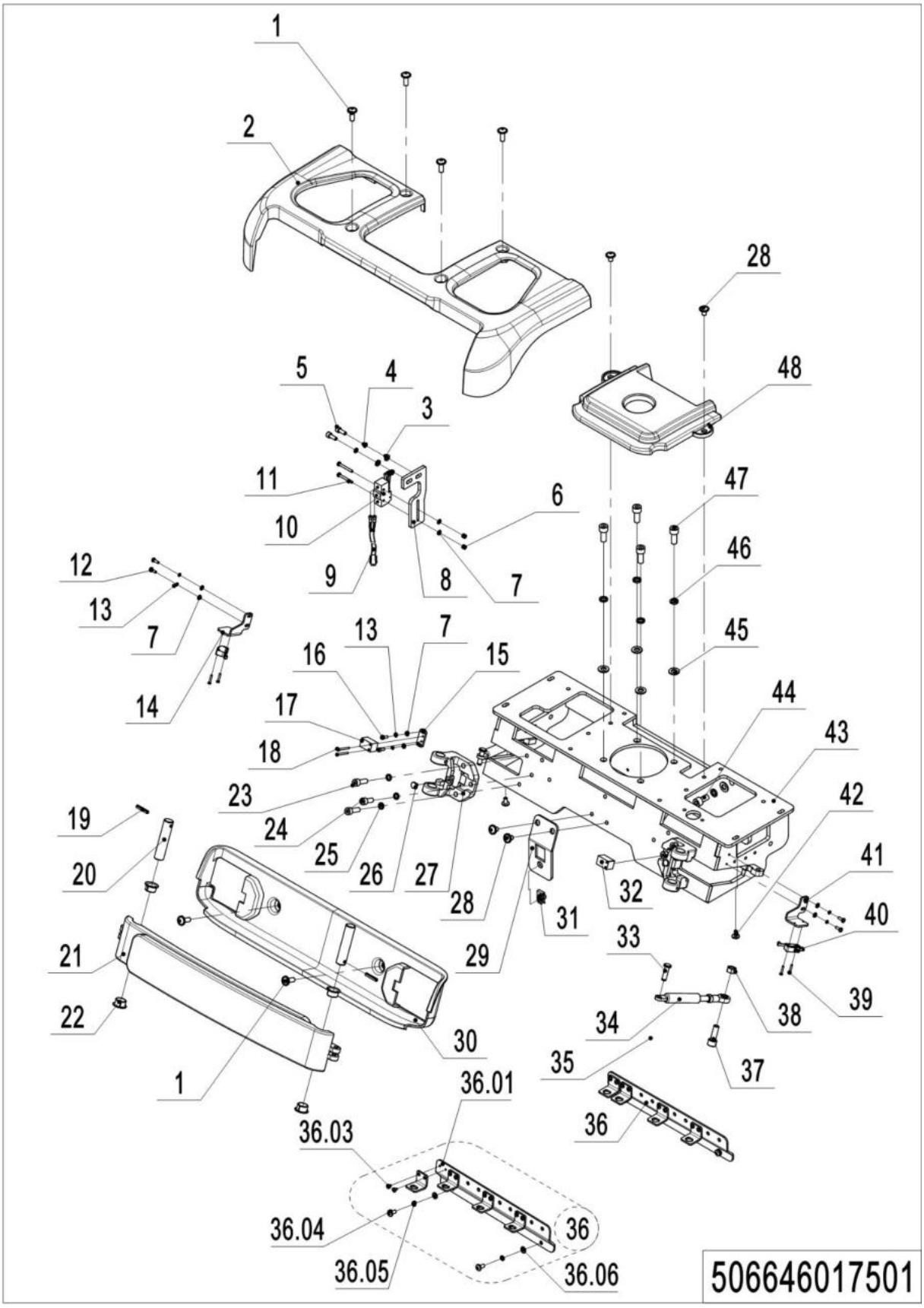

1= Supply as package. 2= Supply with constraints. 3= Phasing-out supply. 4= Supply as assembly. 5= Check other tables.

04 Guard Arm （506646017501）

No.	Item Code	Mark	Item Description	Qty.	Substitute	Note
1	941100100011		Screw	4		
2	506617520099		Protective Cover	1		
3	910400100005		Flat Washer	2		
4	910400500005		Spring Washer	2		
5	910200200146		Screw	2		
6	910300500001		Nut	2		
7	910400100003		Flat Washer	10		
8	506617520006		Mounting Plate	1		
9	506633010001		Wire Harness	1		
10	920200300003		Microswitch	1		
11	910200500029		Screw	2		
12	910200500022		Screw	4		
13	910400500003		Spring Washer	8		
14	506617520009		Mounting Plate	1		
15	535917520011		Mounting Plate	2		
16	910200200136		Screw	4		
17	506733510004		Proximity Switch	1		
18	910200200008		Screw	4		
19	910600400025		Spring Pin	2		
20	535917520007		Axle	2		
21	535917510001		Protective Arm	2		
22	940500200003		Bushing	4		
23	910200200058		Screw	4		
24	910200200057		Screw	2		
25	910400500006		Spring Washer	6		
26	535917520012		Protective Mat	2		
27	535917520006		Mounting Base	2		
28	941100100001		Screw	4		
29	506617520007		Plate	1		
30	535921520041		Protective Cover	1		

04 Guard Arm (506646017501) Continuation

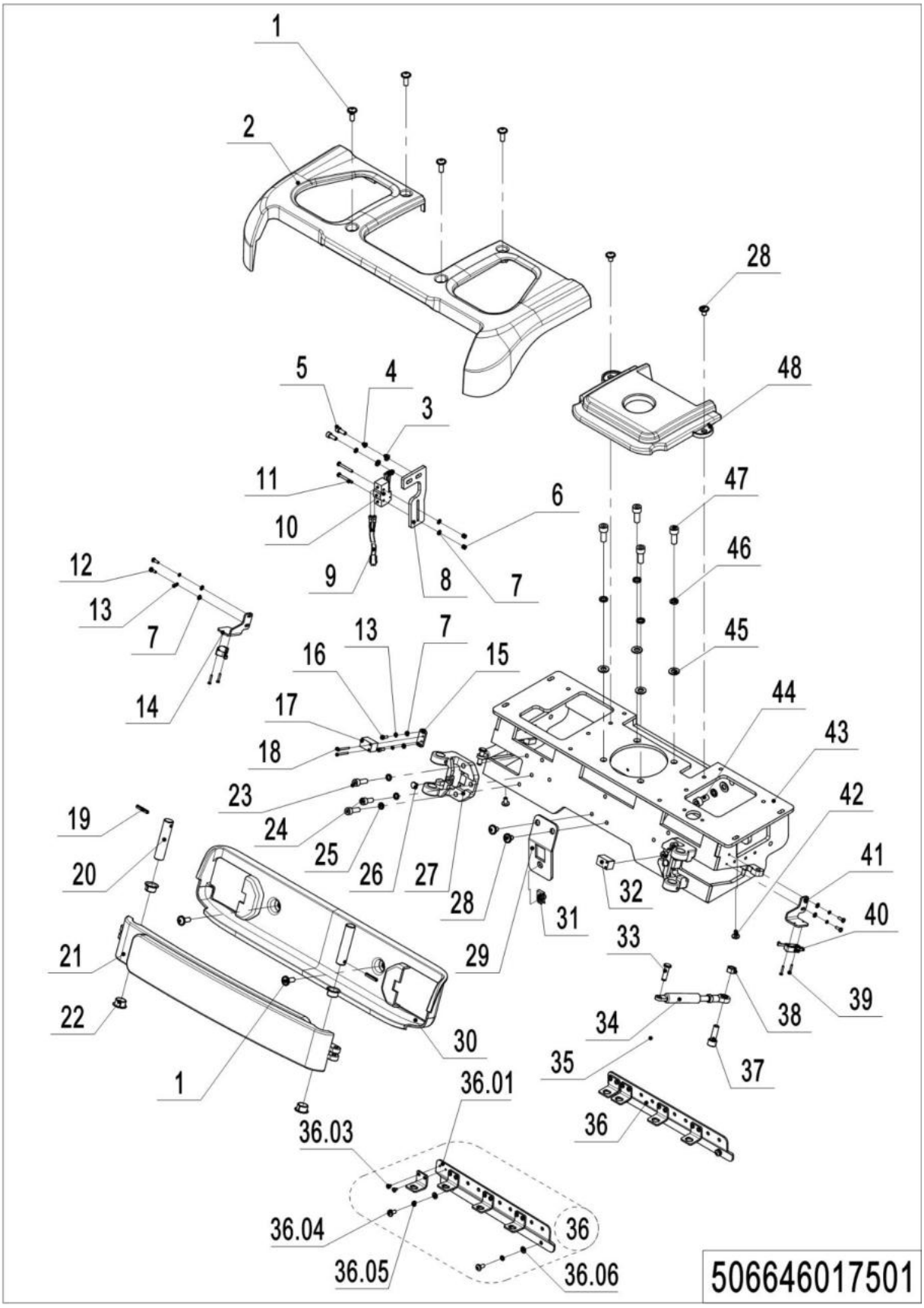

1= Supply as package. 2= Supply with constraints. 3= Phasing-out supply. 4= Supply as assembly. 5= Check other tables.

04 Guard Arm（506646017501）Continuation

No.	Item Code	Mark	Item Description	Qty.	Substitute	Note
31	940400400002		Cage Nut	1		
32	506733510005		Proximity Switch	1		
33	535917520010		Axle	2		
34	940400100037		Air Spring	2		
35	910401300001		Circlip	2		
36	506617510010		Mounting Plate Kits	1		
36.01	506617520008		Plate	3		
36.02	921300300003		Holder	4		
36.03	910200500020		Screw	8		
36.04	910200500051		Screw	2		
36.05	910400500005		Spring Washer	2		
36.06	910400100005		Flat Washer	2		
37	910200200077		Screw	2		
38	910300100007		Nut	2		
39	910200500014		Screw	4		
40	920200300016		Microswitch	2		
41	506617520010		Plate	1		
42	941100100009		Screw	2		
43	506617510000		Bracket	1		
44	910200200075		Screw	4		
45	910400100007		Flat Washer	8		
46	910400500007		Spring Washer	8		
47	910200200076		Screw	4		
48	535921520042		Protective Cover	1		

05 Platform (506646018001)

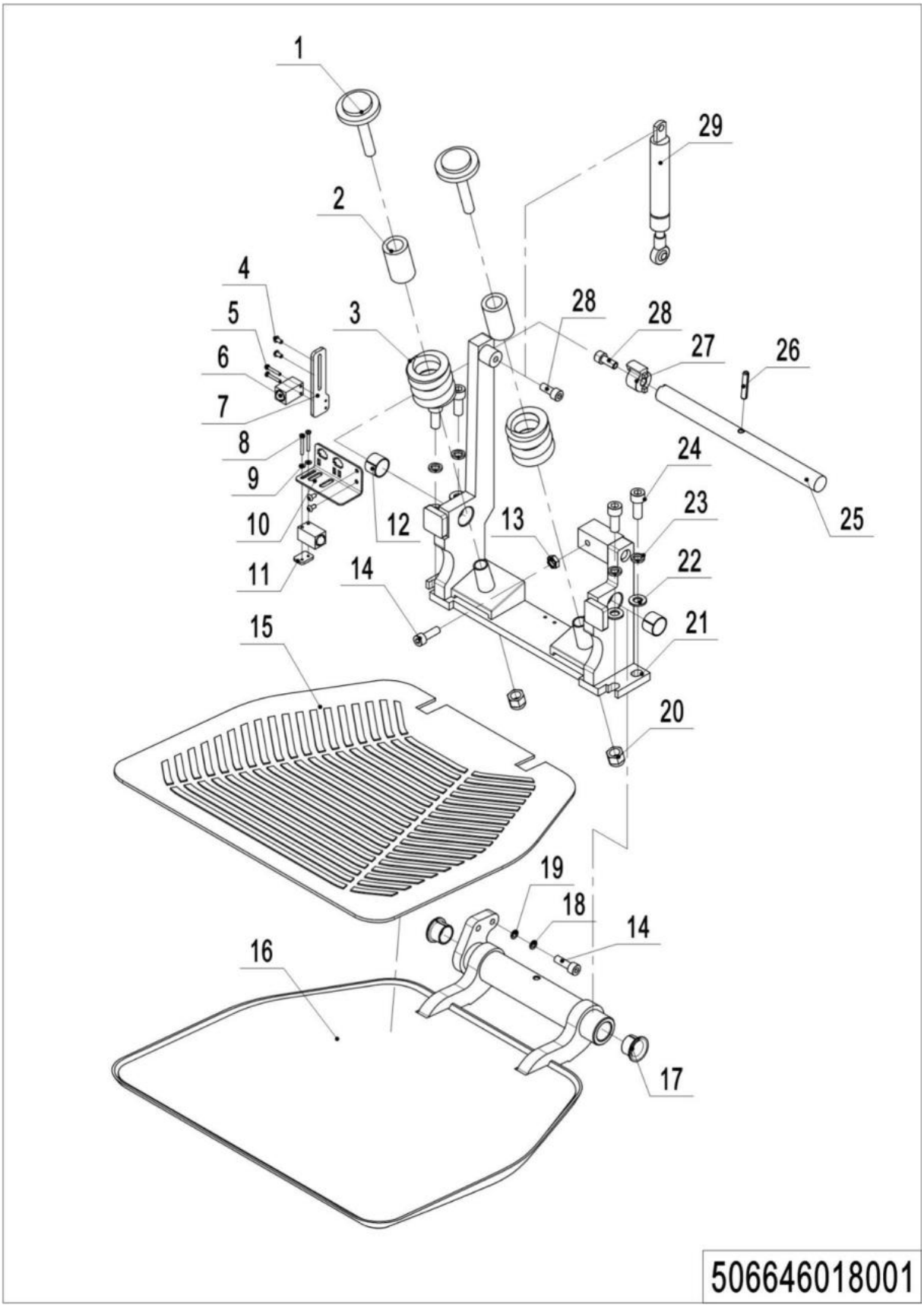

1= Supply as package. 2= Supply with constraints. 3= Phasing-out supply. 4= Supply as assembly. 5= Check other tables.

05 Platform（506646018001）

No.	Item Code	Mark	Item Description	Qty.	Substitute	Note
1	535918020017		Bolt	2		
2	535918020018		Cushion Collar	2		
3	535918020016		Spring	2		
4	910200300005		Screw	4		
5	910200500015		Screw	2		
6	506733510001		Proximity Switch	2		
7	535918020025		Mounting Plate	1		
8	910200500016		Screw	2		
9	910400100002		Flat Washer	2		
10	535918020026		Mounting Plate	1		
11	535918020027		Mounting Plate	1		
12	940500200008		Bushing	2		
13	910300100007		Nut	1		
14	910200200058		Screw	2		
15	535918020019		Platform	1		
16	535918010001		Platform	1		
17	940500100019		Bushing	2		
18	910400500006		Spring Washer	1		
19	910400100006		Flat Washer	1		
20	910300500006		Nut	2		
21	506618010000		Mounting Base	1		
22	910400100007		Flat Washer	2		
23	910400500007		Spring Washer	2		
24	910200200076		Screw	2		
25	535918020024		Axle	1		
26	910600400040		Spring Pin	1		
27	535918020023		Induction Block	1		
28	910200200057		Screw	1		
29	940400100057		Air Spring	1		

06 Battery Cover (506646021001)

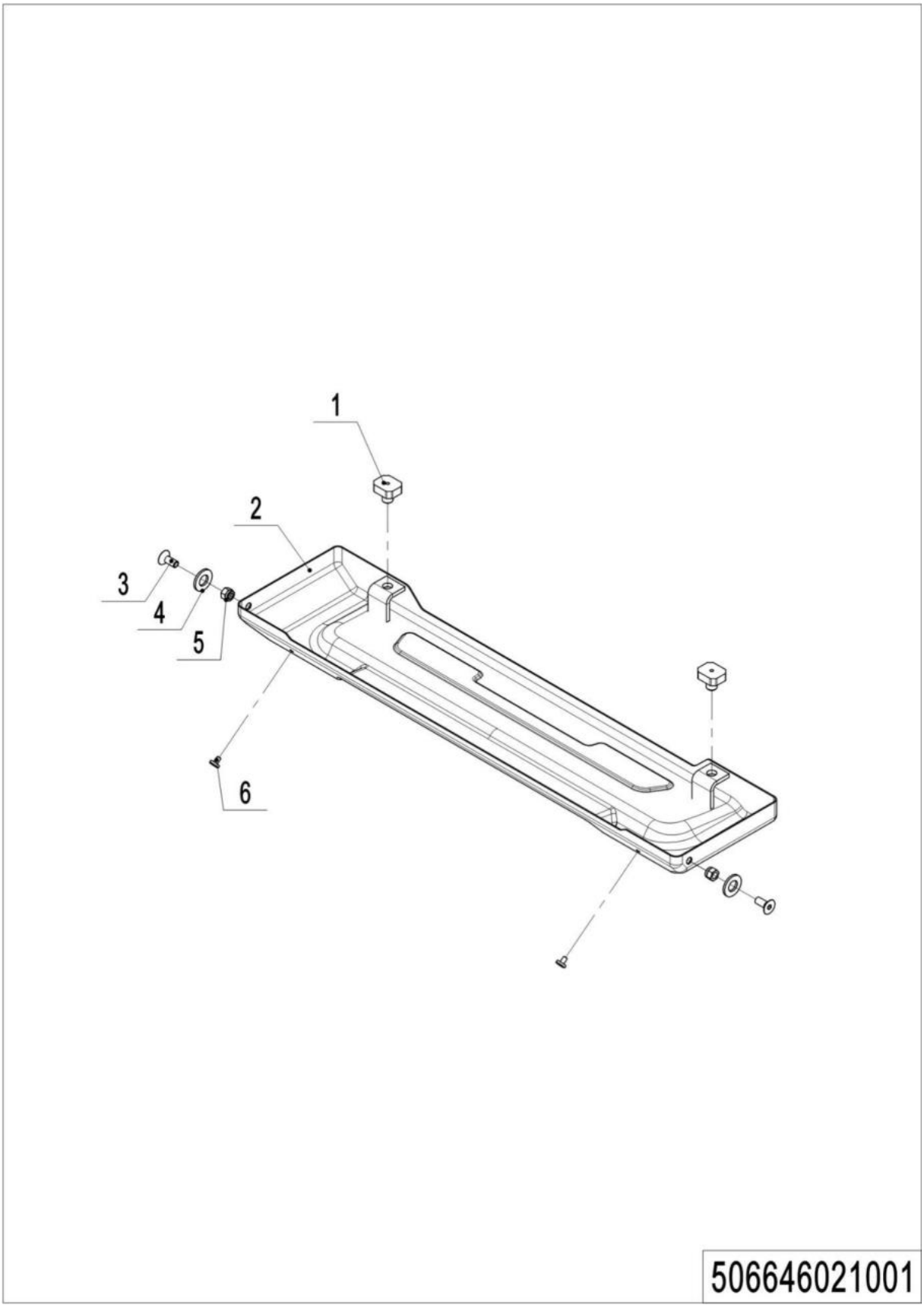

1= Supply as package. 2= Supply with constraints. 3= Phasing-out supply. 4= Supply as assembly. 5= Check other tables.

06 Battery Cover（506646021001）

No.	Item Code	Mark	Item Description	Qty.	Substitute	Note
1	505938520016		Crash Pad	2		
2	506621010000		Cell Cover	1		
3	910200400025		Screw	2		
4	506621020002		Subplate	2		
5	910300500004		Nut	2		
6	535917520012		Protective Mat	2		

07 Caster (505646016501)

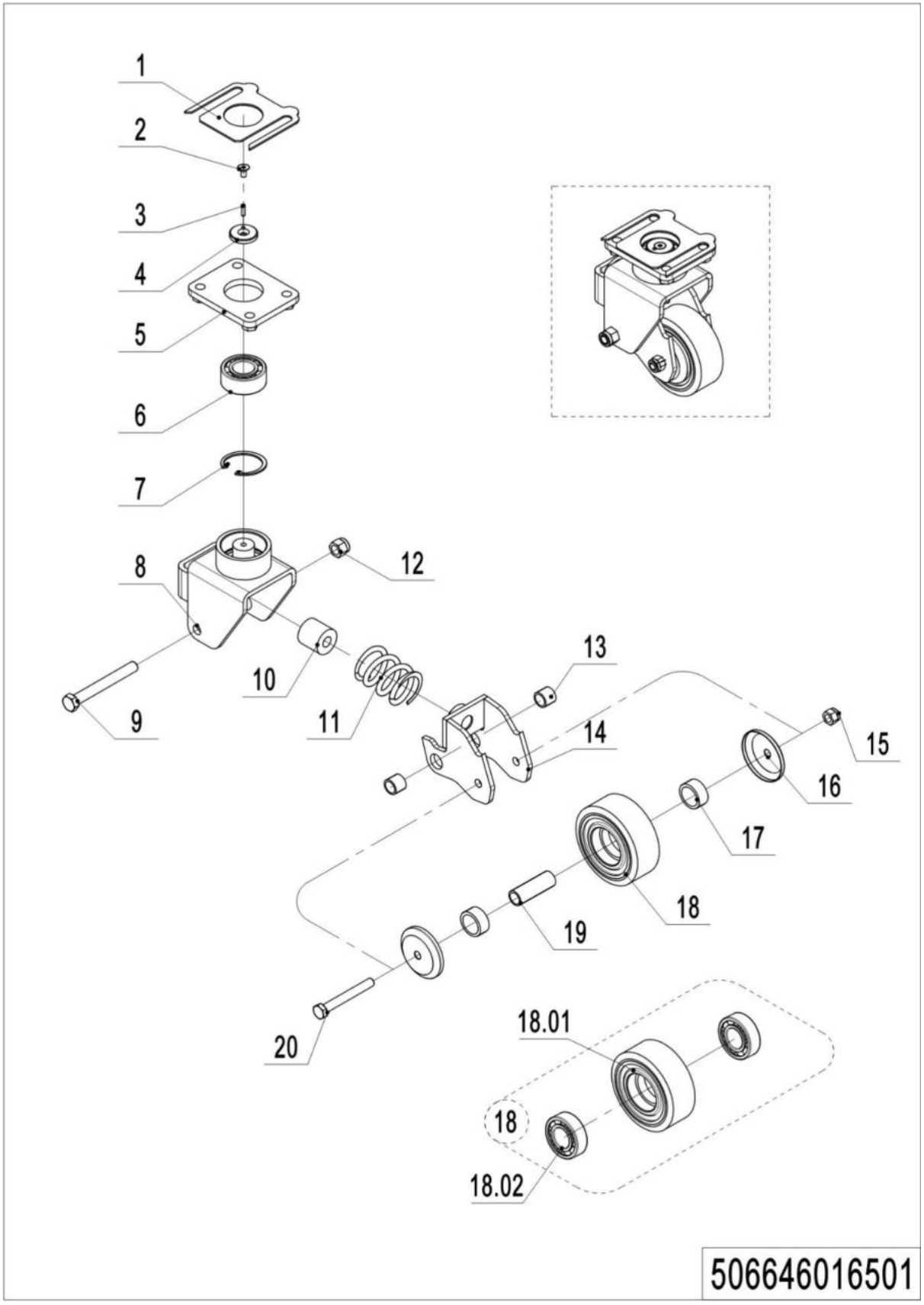

1= Supply as package. 2= Supply with constraints. 3= Phasing-out supply. 4= Supply as assembly. 5= Check other tables.

07 Caster（505646016501）

No.	Item Code	Mark	Item Description	Qty.	Substitute	Note
--	504416510001		Caster Assembly	2		
1	505616520014		Pad	2		
2	941100300001		Screw	2		
3	910600100004		Cylindrical Pin	2		
4	505616520007		Retaining Ring	2		
5	505616510002		Plate	2		
6	910700500002		Bearing	2		
7	910401400016		Circlip	2		
8	505616510001		Wheel Carrier	2		
9	941100200002		Bolt	2		
10	505616520000		Spring	2		
11	940400500006		Spring	2		
12	910300500006		Nut	1		
13	940500100002		Bushing	4		
14	505616510003		Whirling Arm	2		
15	910300500005		Nut	1		
16	505616520011		Dust Cap	4		
17	505616520012		Check Ring	4		
18	505698510000		Wheel	2		
18.01	940300300018		Wheel Φ100x40	2		
18.02	910700200019		Bearing	4		
19	505616520013		Bushing	2		
20	910100100038		Bolt	2		

1= Supply as package. 2= Supply with constraints. 3= Phasing-out supply. 4= Supply as assembly. 5= Check other tables.

Chapter 4: Steering System, Braking System, Wheels

01 Operating panel (506646010001)

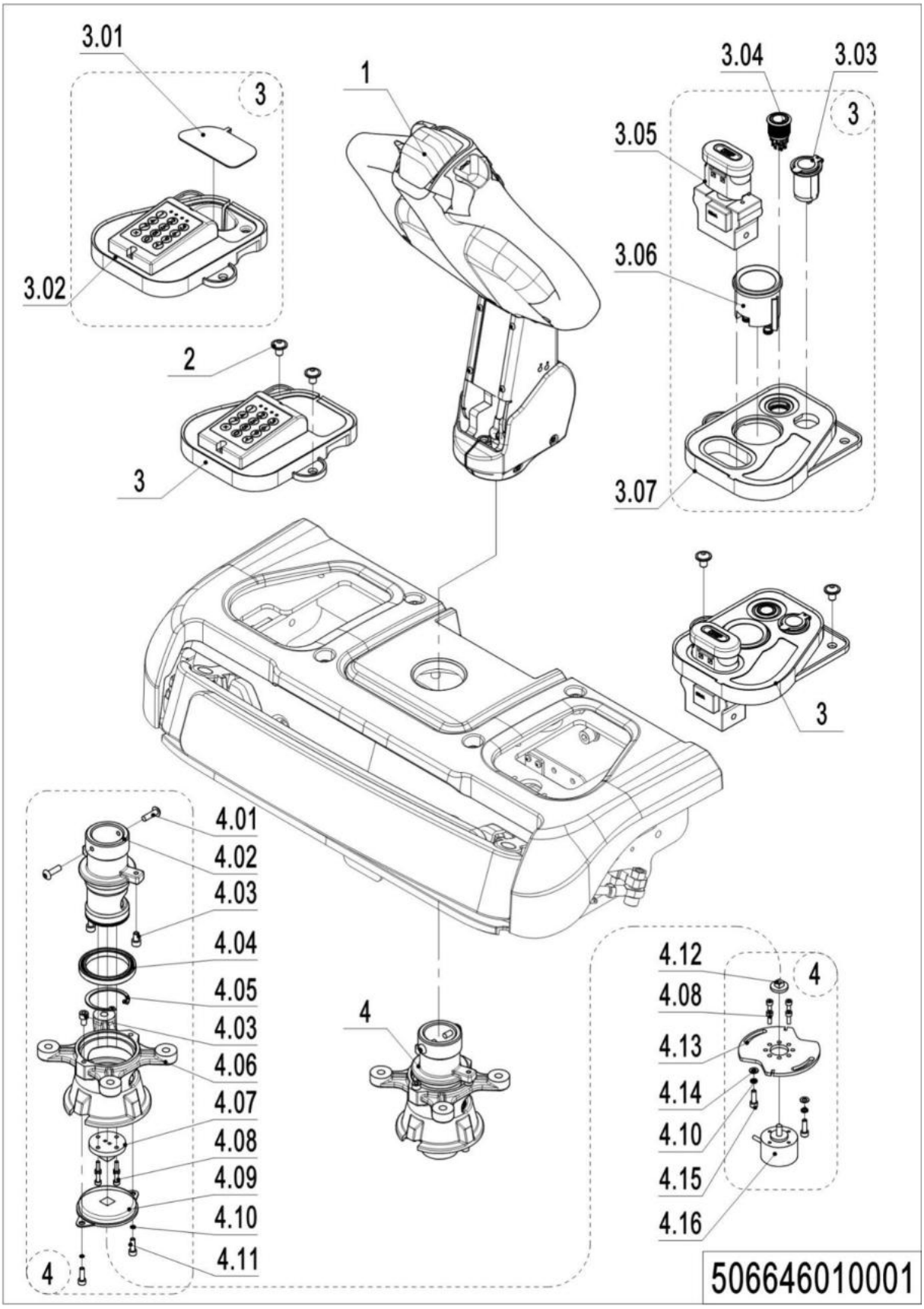

1= Supply as package. 2= Supply with constraints. 3= Phasing-out supply. 4= Supply as assembly. 5= Check other tables.

01 Operating panel（506646010001）

No.	Item Code	Mark	Item Description	Qty.	Substitute	Note
1	506611001001		Tiller Assembly	1		
2	941100100001		Screw	4		
3	506610001001		Indicator Kit	1		
3.01	535910020003		Close Plate	1		
3.02	920200200014		Pin-code Lock	1		
3.03	206033010036		USB interface	1		
3.04	506634010000		Button	1		
3.05	920200100009		Emergency Button	1		
3.06	921100100116		Display	1		
3.07	535910020001		Bezel	1		
4	535931501001		Electronic Steering Assembly	1		
4.01	910200300016		Screw	2		
4.02	535931520001		Bracket	1		
4.03	910200200032		Screw	3		
4.04	910700200041		Bearing	1		
4.05	910401300024		Circlip	1		
4.06	505631520002		Fixing Base	1		
4.07	505631520005		Link Block	1		
4.08	910200200014		Screw	8		
4.09	940801200005		Rotary Damper	1		
4.10	910400500004		Spring Washer	4		
4.11	910200200022		Screw	2		
4.12	505931520002		Link Block	1		
4.13	535931520002		Mounting Plate	1		
4.14	910400100004		Flat Washer	2		
4.15	910200200023		Screw	2		
4.16	921800100037		Potentiometer	1		

1= Supply as package. 2= Supply with constraints. 3= Phasing-out supply. 4= Supply as assembly. 5= Check other tables.

02 Tiller Unit (535946011001)

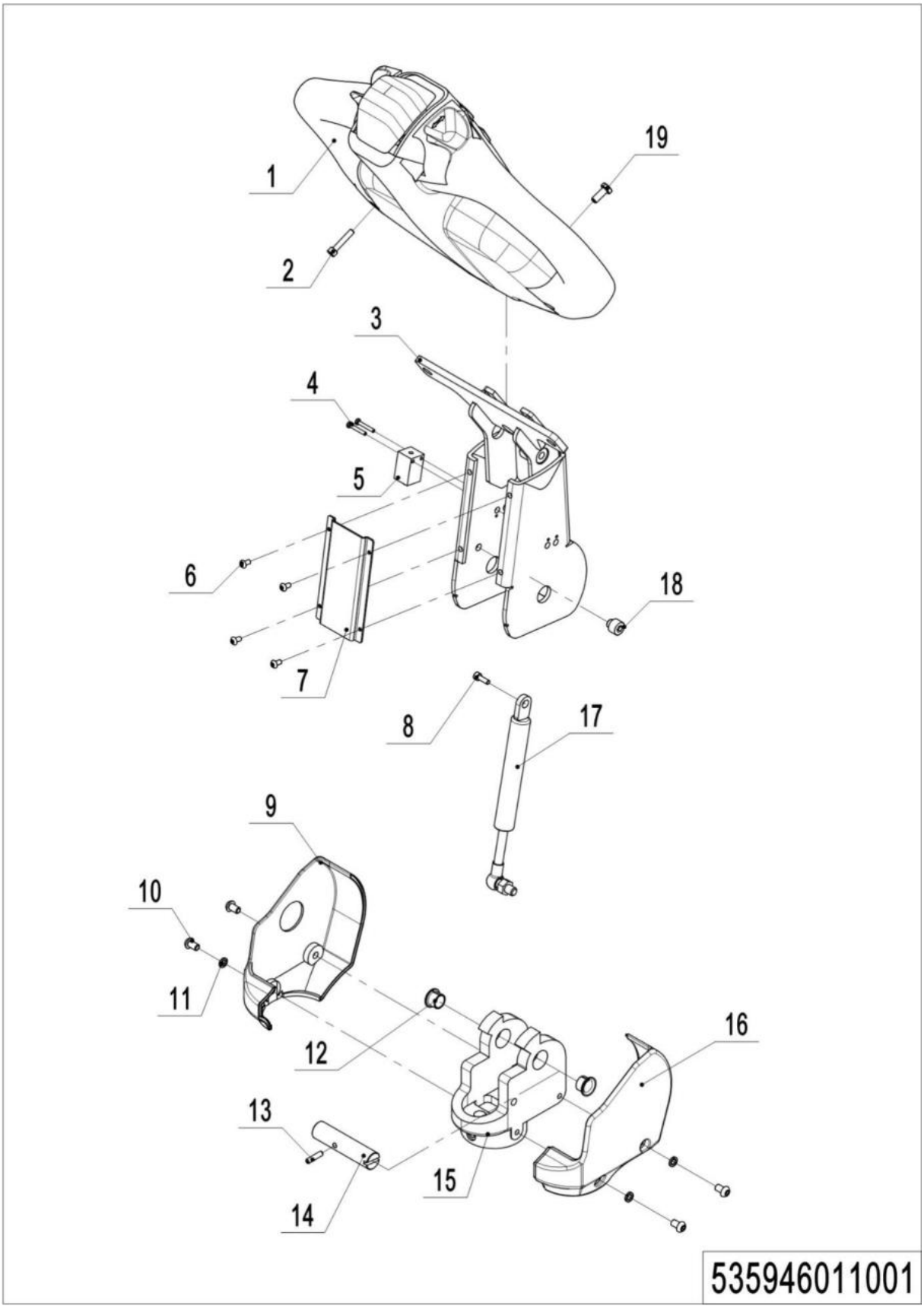

1= Supply as package. 2= Supply with constraints. 3= Phasing-out supply. 4= Supply as assembly. 5= Check other tables.

02 Tiller Unit（535946011001）

No.	Item Code	Mark	Item Description	Qty.	Substitute	Note
1	922100100099-T02		Control Handle	1		
2	535911010001		Tiller	1		
3	910200500015		Screw	2		
4	505633510000		Proximity Switch	1		
5	910200300005		Screw	4		
6	535911020008		Close Plate	1		
7	910200200057		Screw	1		
8	535911020005		Protective Cover	1		
9	910200300016		Screw	4		
10	910400500005		Spring Washer	4		
11	940500200002		Bushing	2		
12	910600400013		Spring Pin	1		
13	505611020008		Axle	1		
14	535911020009		Bracket	1		
15	535911020006		Protective Cover	1		
16	910400100006		Flat Washer	1		
17	940400100045		Air Spring	1		
18	505611020007		Screw	1		
19	910200200058		Screw	2		

03 Control Handle (566546010002)

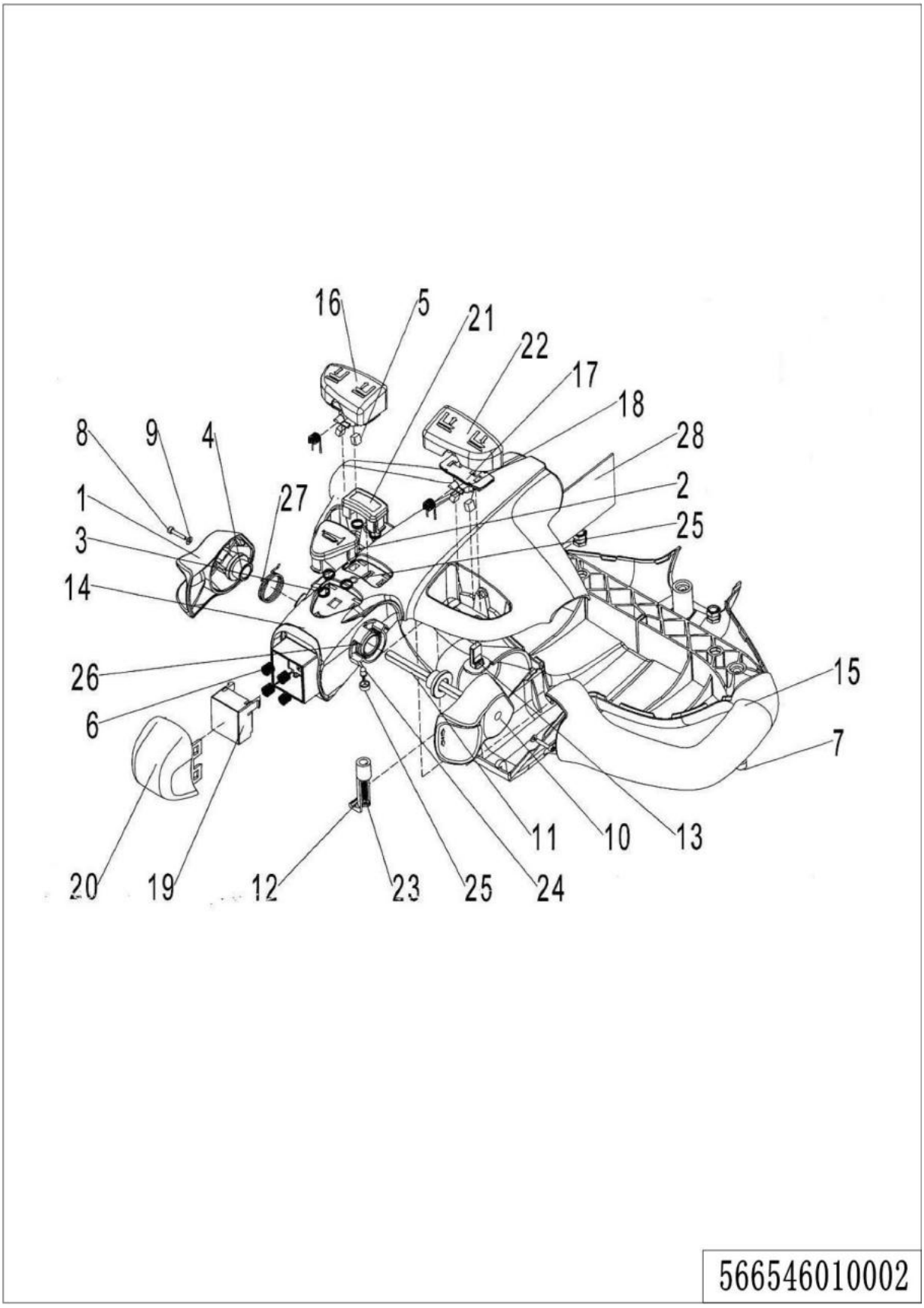

03 Control Handle（566546010002）

No.	Item Code	Mark	Item Description	Qty.	Substitute	Note
1	505698520001		Traction lever	1		
2	505698520002		Horn Button	1		
3	505698520003		Spring	5		
4	505698520004		Sleeve	2		
5	505698520005		Magnet	4		
6	505698520006		Spring	4		
7	505698520007		Screw	3		
8	505698520008		Screw	2		
9	505698520009		Washer	2		
10	505698520010		Traction lever	1		
11	505698520011		Axle-Traction lever	1		
12	505698520012		Clamp	1		
13	505698520013		Sensor	2		
14	505698520014		Handle Cap	1		
15	505698520015		Handle Cap	1		
16	505698520016		Button cap	1		
17	505698520017		Fixing Base	2		
18	505698520018		Torsional Spring	2		
19	505698520019		Pedestal	1		
20	505698520020		Button Cap-	1		
21	505698520021		Button Cap	1		
22	505698520022		Button Cap	1		
23	505698520023		Screw	1		
24	505698520024		Light	1		
25	505698520025		Lamp Holder	1		
26	505698520026		Torsional Spring	1		
27	505698520027		Torsional Spring	1		
28	505698520028		circuit Board	1		

1= Supply as package. 2= Supply with constraints. 3= Phasing-out supply. 4= Supply as assembly. 5= Check other tables.

Chapter 5: Electrical Parts

01 Wire Harness (506646033001)

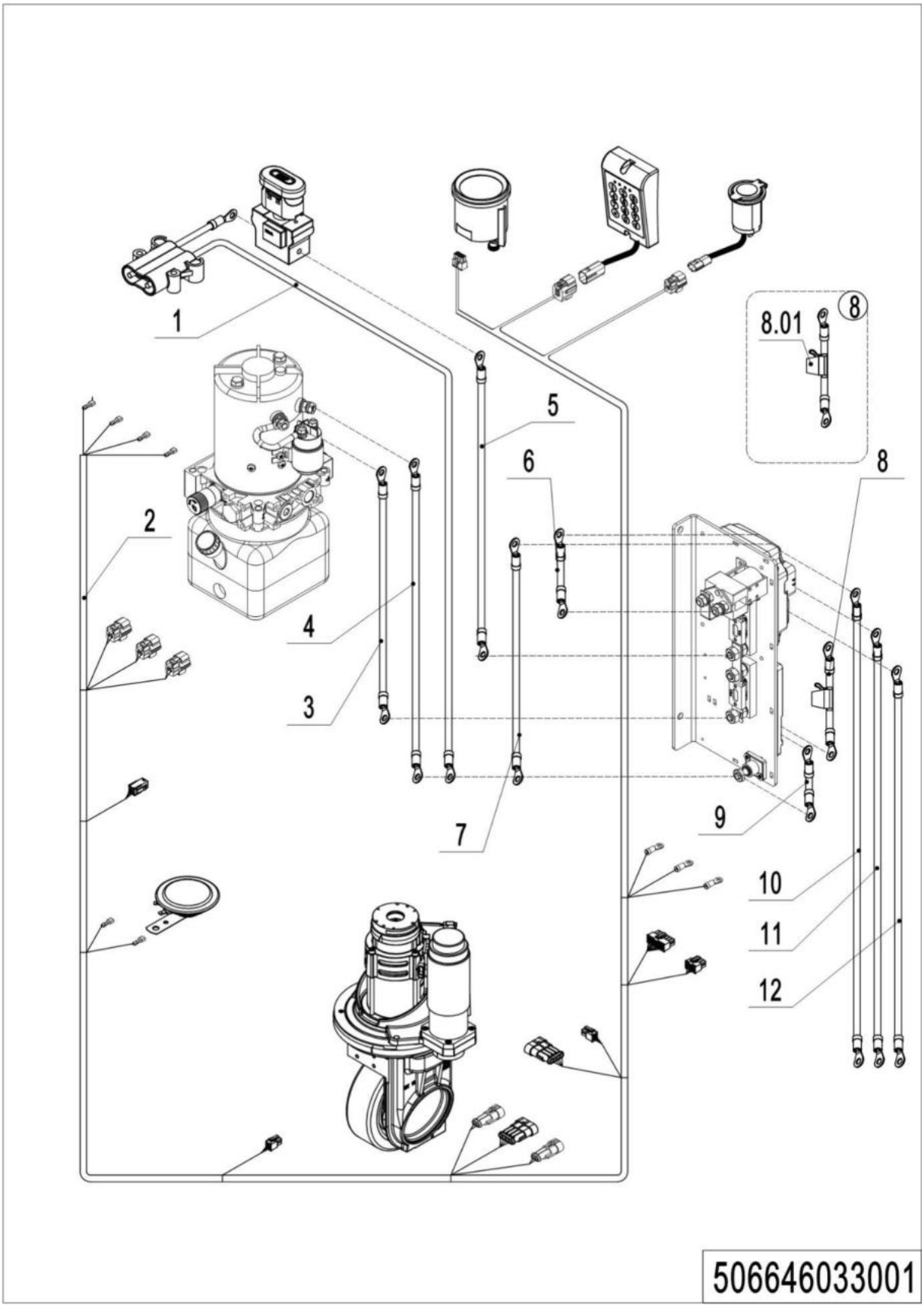

1= Supply as package. 2= Supply with constraints. 3= Phasing-out supply. 4= Supply as assembly. 5= Check other tables.

01 Wire Harness（502546033001）

No.	Item Code	Mark	Item Description	Qty.	Substitute	Note
1	506633010011		Cables	1		
2	506633010000		Wire Harness	1		
3	506633010004		Cables	1		
4	506633010003		Cables	1		
5	506633010005		Cables	1		
6	506633010006		Cables	1		
7	506633010002		Cables	1		
8	506633010010		Cables	1		
8.01	920100200013		Fuse	1		
9	506633010012		Cables	1		
10	506633010007		Cables	1		
11	506633010008		Cables	1		
12	506633010009		Cables	1		

02 Controller (536646033002)

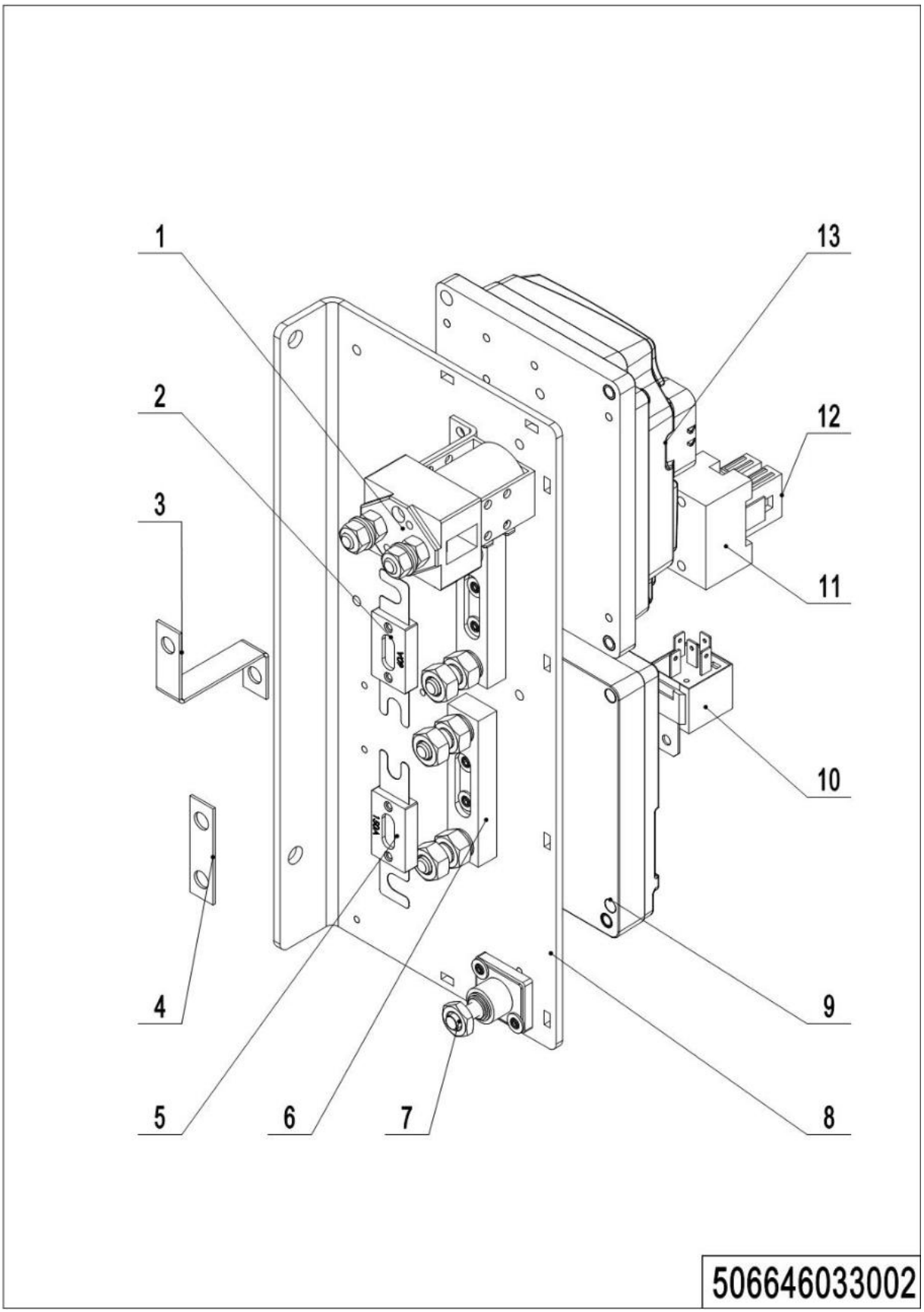

1= Supply as package. 2= Supply with constraints. 3= Phasing-out supply. 4= Supply as assembly. 5= Check other tables.

02 Controller（536646033002）

No.	Item Code	Mark	Item Description	Qty.	Substitute	Note
1	920700100017		Relay	1		
2	920100100007		Fuse	1		
3	505633020002		Copper Busbar	1		
4	505633020003		Copper Busbar	1		
5	920100100004		Fuse	1		
6	920100400002		Fuse Holder	2		
7	920100400001		Fuse Holder	1		
8	506633020000		Mounting Plate	1		
9	921400100077		Controller	1		
10	920800100011		Relay	1		
11	920100400005		Fuse Holder	1		
12	920100200002		Fuse	1		
13	921400100064		Controller	1		

03 Charger (502546036501)

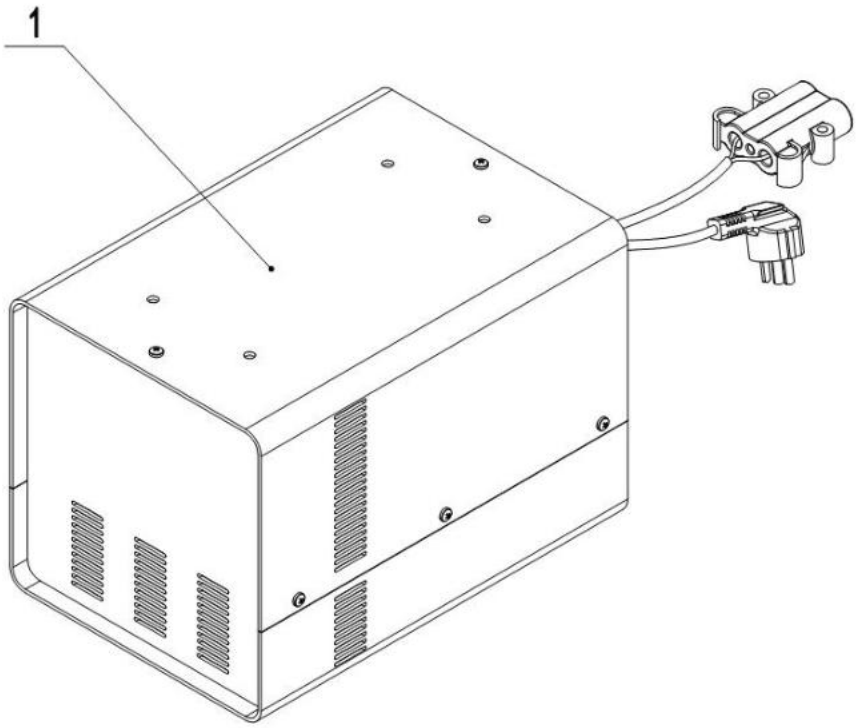

506646036501

1= Supply as package. 2= Supply with constraints. 3= Phasing-out supply. 4= Supply as assembly. 5= Check other tables.

03 Charger（502546036501）

No.	Item Code	Mark	Item Description	Qty.	Substitute	Note
1	921000200531		Charger24V80A(Asia-CHN)			
1	921000200532		Charger24V80A(Asia-EN)			
1	921000200533		Charger24V80A(EU)			
1	921000200534		Charger24V80A(ENG)			
1	921000200535		Charger24V80A(AUS)			
1	921000200536		Charger24V80A(ISR)			
1	921000200537		Charger24V80A(ARG)			
1	921000200538		Charger24V80A(ZA)			
1	921000200539		Charger24V8A(US)			

04 Lithium battery (506646037001)

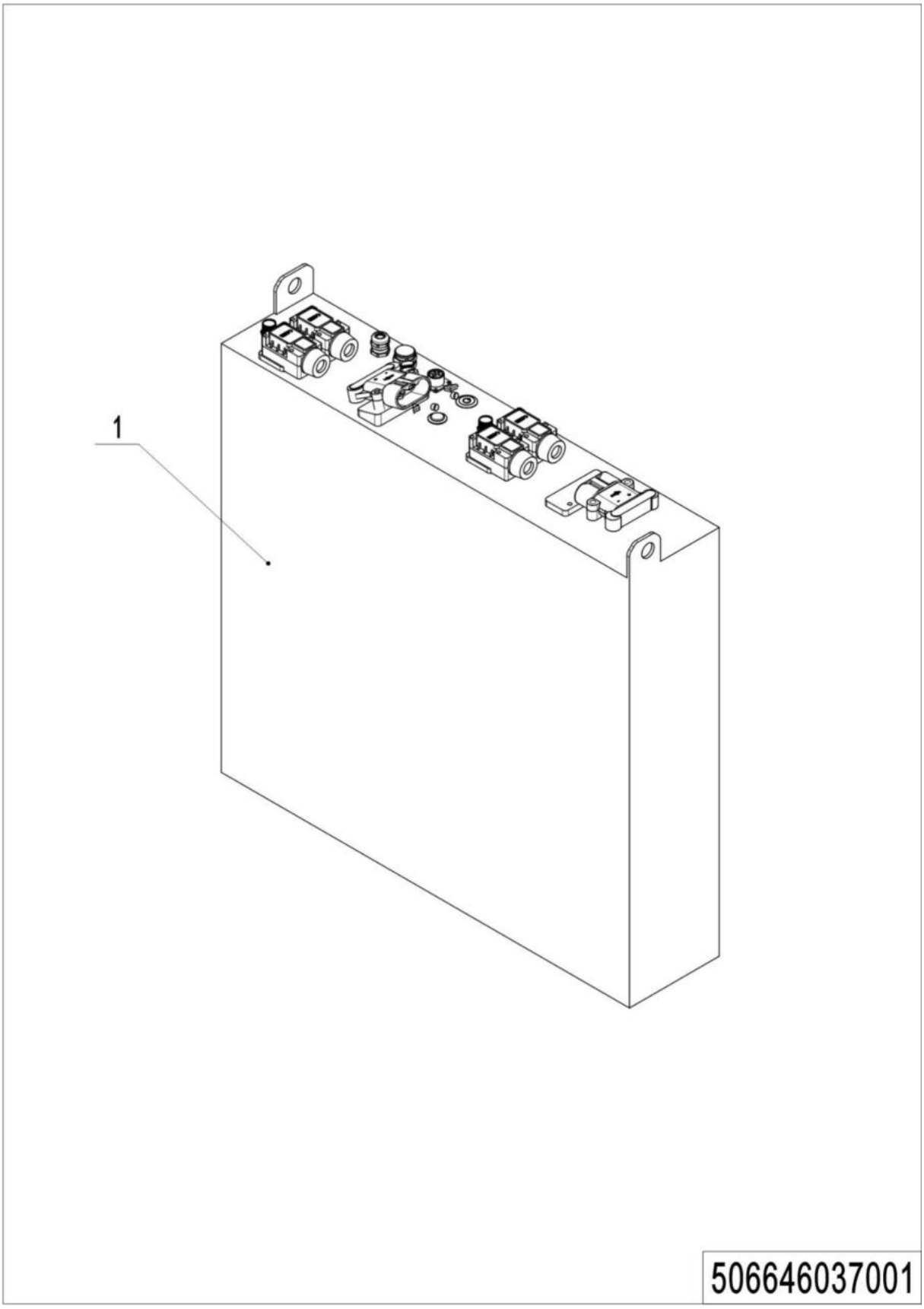

1= Supply as package. 2= Supply with constraints. 3= Phasing-out supply. 4= Supply as assembly. 5= Check other tables.

04 Lithium battery（506646037001）

No.	Item Code	Mark	Item Description	Qty.	Substitute	Note
1	920600100259		Li Battery24V150Ah	1		

1= Supply as package. 2= Supply with constraints. 3= Phasing-out supply. 4= Supply as assembly. 5= Check other tables.

Chapter 6: Others

01 Labels，Decals-US (506646047001)

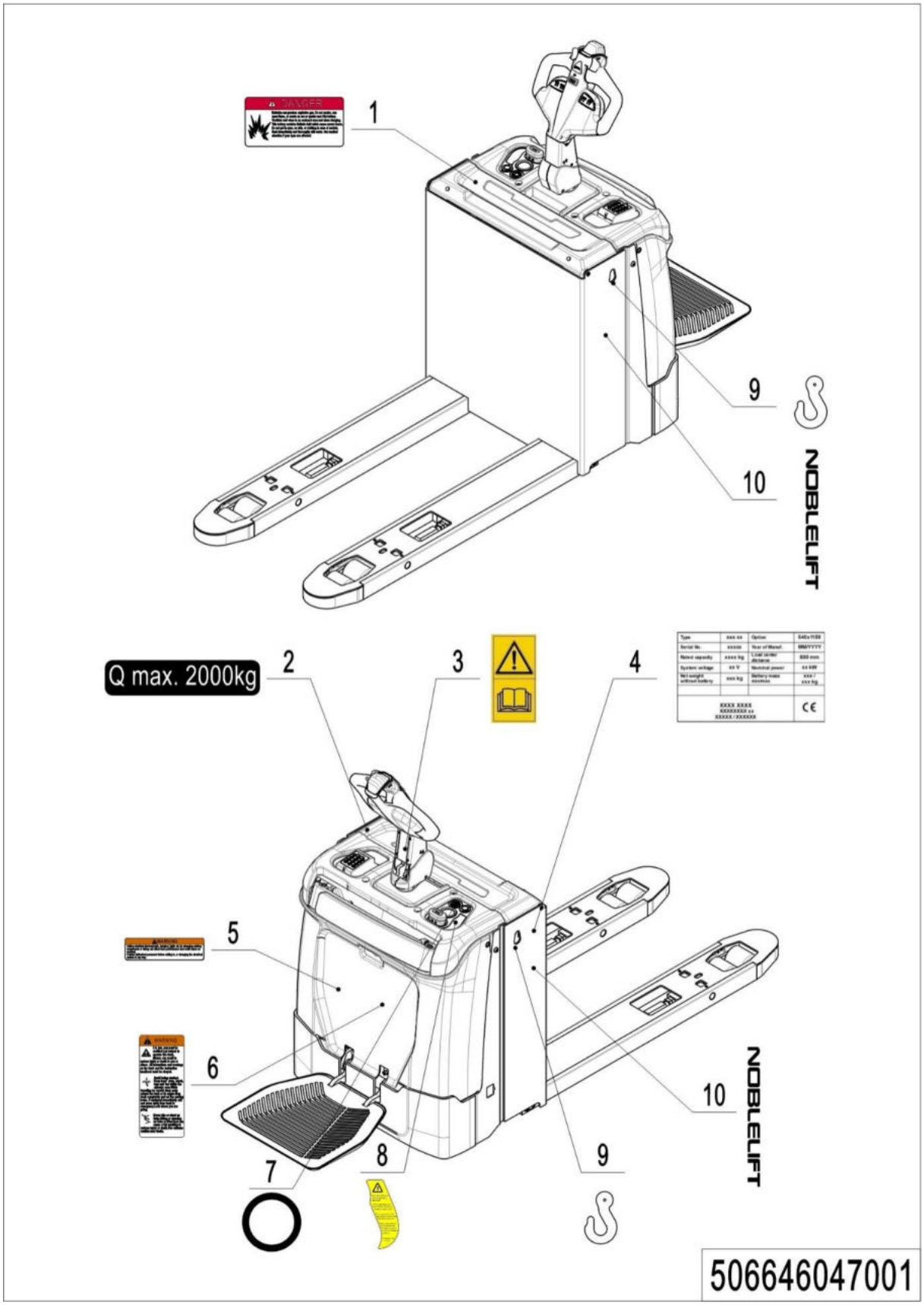

1= Supply as package. 2= Supply with constraints. 3= Phasing-out supply. 4= Supply as assembly. 5= Check other tables.

01 Labels，Decals-US（506646047001）

No.	Item Code	Mark	Item Description	Qty.	Substitute	Note
1	941200100013		Label	1		
2	941200200010		Label	1		
3	941200300002		Label	1		
4	506647520000		Truck data plate	1		
5	941200100009		Label	1		
6	941200100010		Label	1		
7	941200400013		Label	1		
8	941200300018		Label	1		
9	941200300001		Label	2		
10	941200500001		Label	2		

02 Labels，Decals-EU (506646047002)

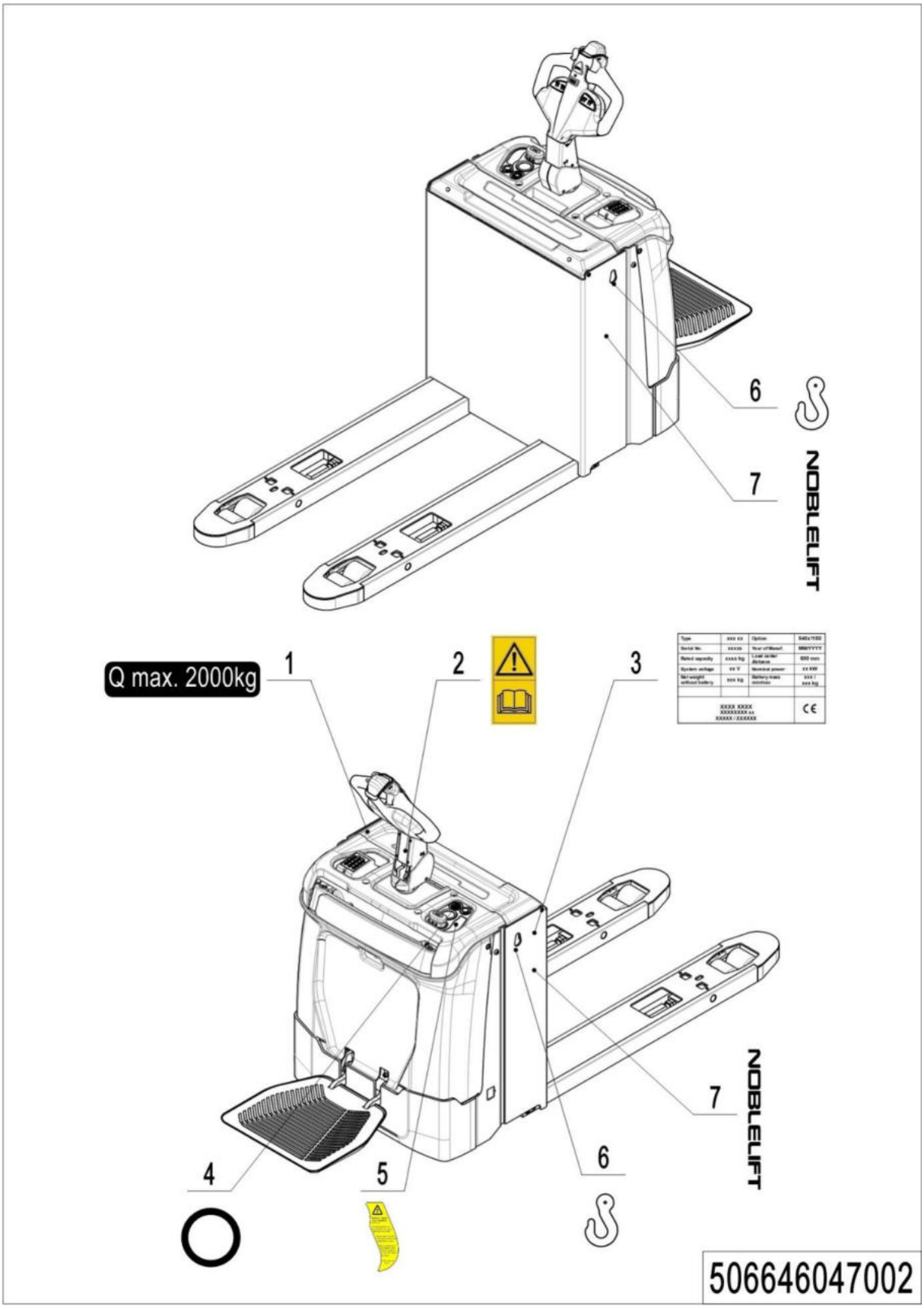

1= Supply as package. 2= Supply with constraints. 3= Phasing-out supply. 4= Supply as assembly. 5= Check other tables.

02 Labels，Decals-EU（506646047002）

No.	Item Code	Mark	Item Description	Qty.	Substitute	Note
1	941200200010		Label	1		
2	941200300002		Label	1		
3	506647520000		Truck data plate	1		
4	941200400013		Label	1		
5	941200300018		Label	1		
6	941200300001		Label	2		
7	941200500001		Label	2		

Appendix

01 Electrical Circuit Diagram (506646045501)

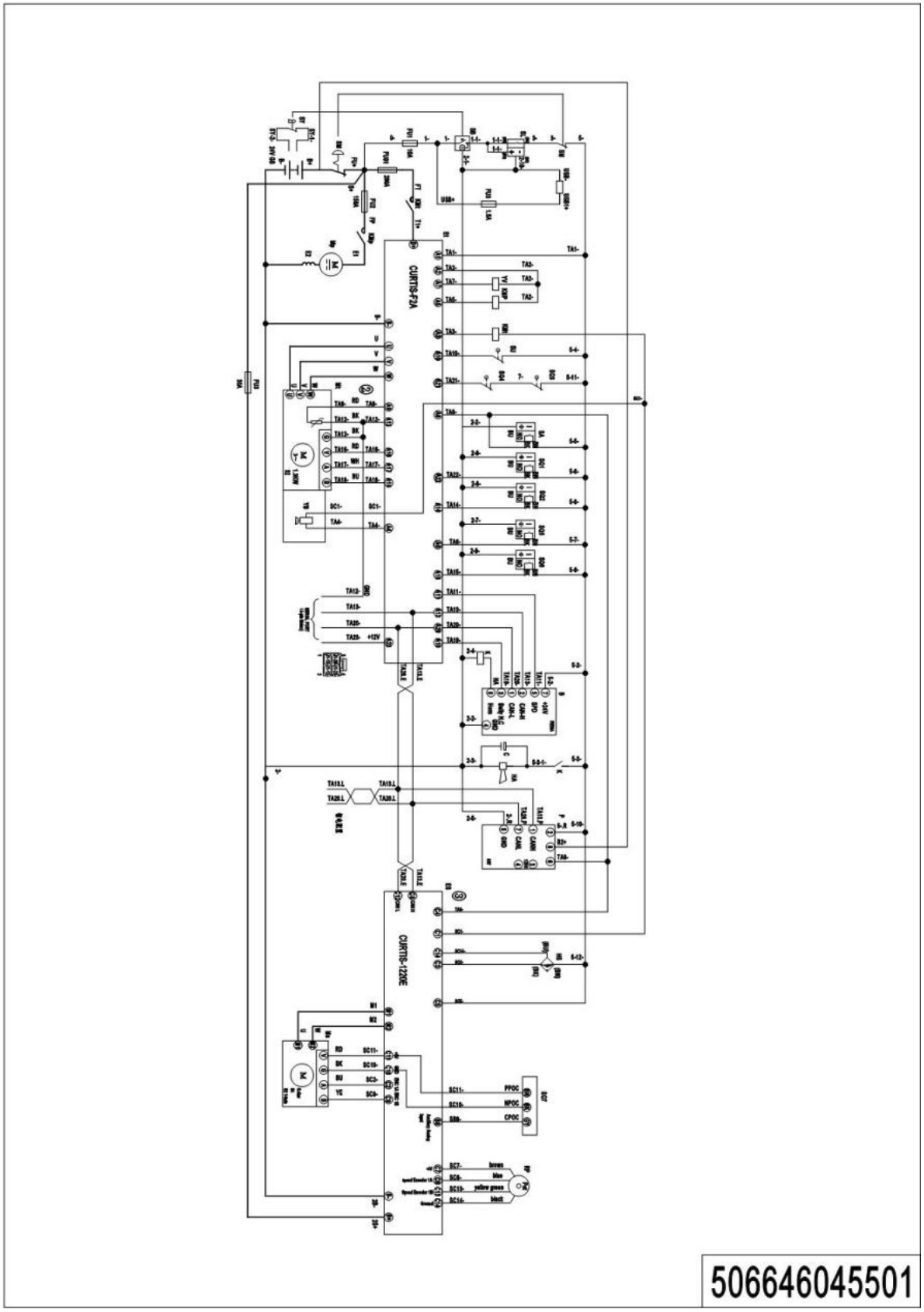

02 Hydraulic Circuit Diagram (508046045502)

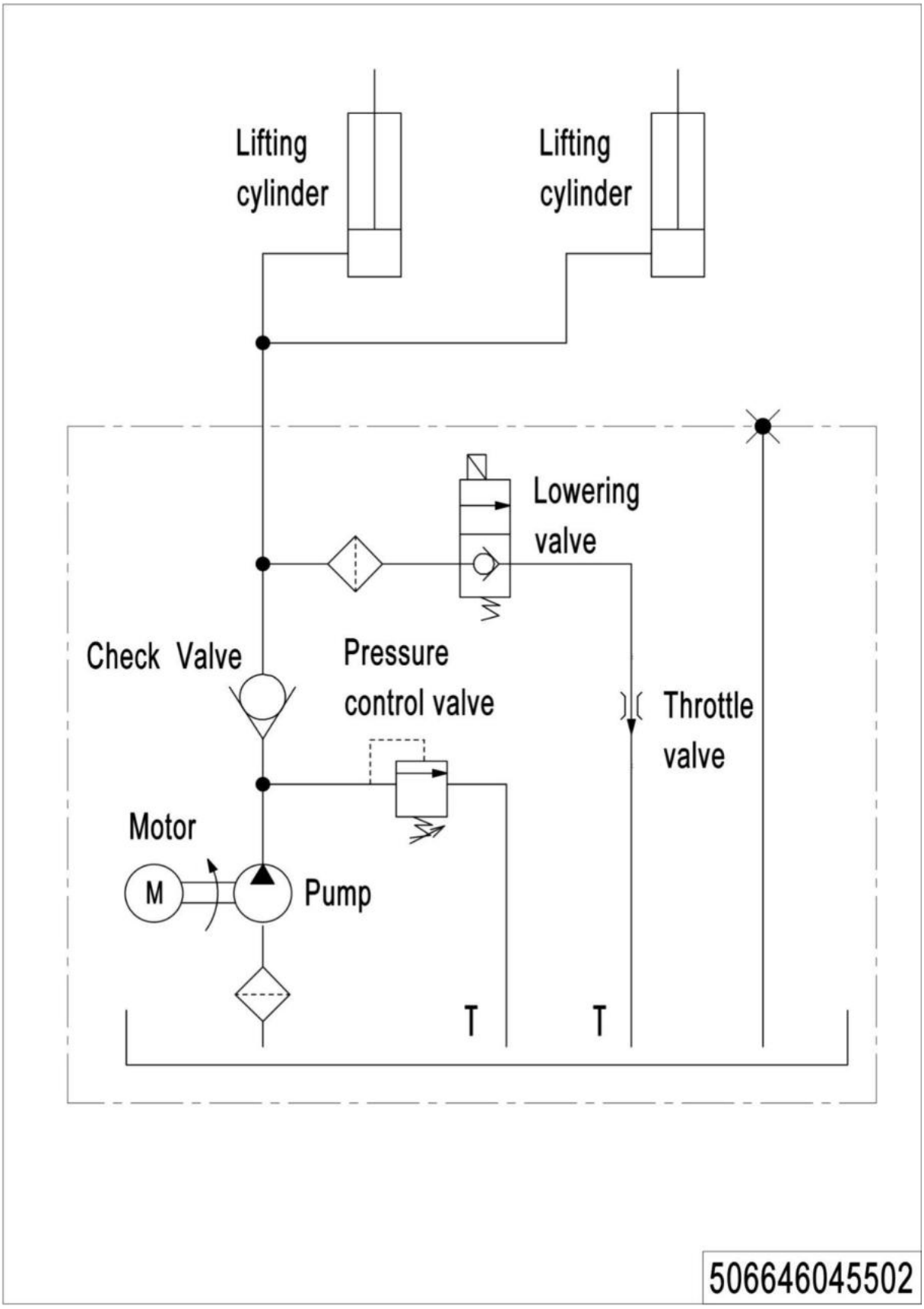

03 Consumable Parts List

No.	Item Code	Item Description	Qty.	Chapter/ Section/ Number
1	506698510000	Seal Kit	1	Chapter 2/01/13.01
2	940500100012	Bushing	4	Chapter 3/01/12
3	940500200042	Bushing	16	Chapter 3/01/16 Chapter 3/02/16
4	566517001000	Wheel	2	Chapter 3/01/26 Chapter 3/02/26
5	910700200019	Bearing	8	Chapter 3/01/26.03 Chapter 3/02/26.03
5	910700200019	Bearing	2	Chapter 3/07/18.02
6	940500200040	Bushing	4	Chapter 3/01/31 Chapter 3/02/31
7	940200300003	Compound Roller	4	Chapter 3/03/08
8	506621520002	Dust Cap	1	Chapter 3/03/20
9	506733510004	Proximity Switch	1	Chapter 3/04/17
10	940500200003	Bushing	4	Chapter 3/04/22
11	506733510005	Proximity Switch	1	Chapter 3/04/32
12	940400100037	Air Spring	2	Chapter 3/04/34
13	920200300016	Microswitch	2	Chapter 3/04/40
14	535918020018	Cushion Collar	2	Chapter 3/05/02
15	940400100057	Air Spring	1	Chapter 3/05/29
16	506621020002	Subplate	2	Chapter 3/06/04
17	910700500002	Bearing	2	Chapter 3/07/06
18	505616520000	Spring	2	Chapter 3/07/10
19	940400500006	Spring	2	Chapter 3/07/11
20	505698510000	Wheel	2	Chapter 3/07/18
21	910700200041	Bearing	1	Chapter 4/01/04.04
22	505631520005	Link Block	1	Chapter 4/01/04.07
23	940801200005	Rotary Damper	1	Chapter 4/01/04.09
24	505931520002	Link Block	1	Chapter 4/01/04.12
25	921800100037	Potentiometer	1	Chapter 4/01/04.16
26	505633510000	Proximity Switch	1	Chapter 4/02/04
27	940500200002	Bushing	2	Chapter 4/02/11
28	940400100045	Air Spring	1	Chapter 4/02/17
29	920100200013	Fuse	1	Chapter 5/01/8.01

1= Supply as package. 2= Supply with constraints. 3= Phasing-out supply. 4= Supply as assembly. 5= Check other tables.

03 Consumable Parts List Continuation

No.	Item Code	Item Description	Qty.	Chapter/ Section/ Number
30	920100100007	Fuse	1	Chapter 5/02/02
31	920100100004	Fuse	1	Chapter 5/02/05
32	920100200002	Fuse	1	Chapter 5/02/12

1= Supply as package. 2= Supply with constraints. 3= Phasing-out supply. 4= Supply as assembly. 5= Check other tables.