NOBLELIFT

INSTRUCTION MANUAL

Electric Pallet Truck

PT20Li

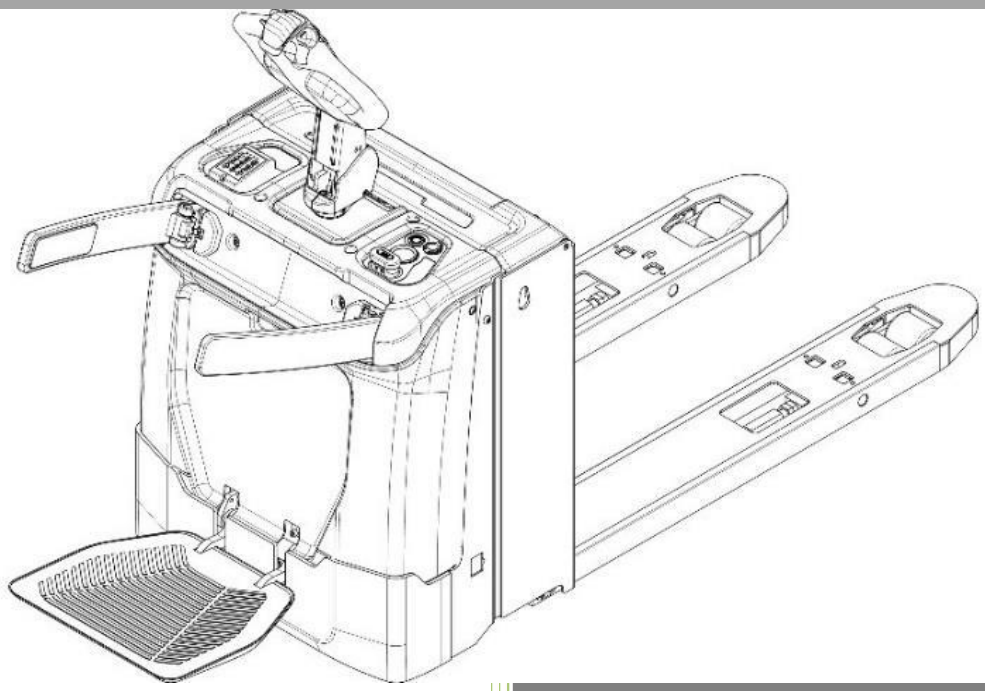

WARNING

Do not use the pallet truck before reading and understanding these operating instructions.

NOTE:

- **Please check the designation of your present type at the last page of this document as well as on the ID-plate.**

Version 08/2023

PT20Li-SMS-003-EN

FOREWORD

Before operating the truck, read this ORIGINAL INSTRUCTION MANUAL carefully and understand the usage of the truck completely. Improper operation could create danger.

This manual describes the usage of different electric pallet trucks. When operating and servicing the truck, make sure, that it applies to your type.

Keep this manual for future reference. If this or the warning/ caution labels are damaged or get lost, please contact your local dealer for replacement.

ATTENTION:

- Environmentally hazardous waste, such as batteries, oil and electronics, will have a negative effect on the environment, or health, if handled incorrectly.

- The waste packages should be sorted and put into solid dustbins according to the materials and be collected disposal by local special environment protection bureau. To avoid pollution, it's forbidden to throw away the wastes randomly.

- To avoid leaking during the use of the products, the user should prepare some absorbable materials (scraps of wooden or dry duster cloth) to absorb the leaking oil in time. To avoid second pollution to the environment, the used absorbable materials should be handed in to special departments in terms of local authorities.

- Our products are subject to ongoing developments. Because this manual is only for the purpose of operating /servicing the pallet truck, therefore please have understanding, that there is no guarantee out of particular features out of this manual.

NOTE: In this manual, the left symbol indicates warning and danger, which may lead to death or serious injury if not followed.

Copyright

The copyright remains with the company, mentioned on the CE- certificate at the end of this document.

TABLE OF CONTENTS

1. CORRECT APPLICATION 2
2. DESCRIPTION OF THE PALLET TRUCK 3
a. Overview of the main components 3
b. Technical data 1
c. Description of the safety devices and warning labels (Europe and other, excepting USA) 3
d. Identification plate 4
3. WARNINGS, RESIDUAL RISK AND SAFETY INSTRUCTIONS 5
4. COMMISSIONING, TRANSPORTING, DECOMMISSIONING 6
a. Commissioning 6
b. Hoisting/ transportation 6
c. Decommissioning 8
5. DAILY INSPECTION 9
6. OPERATING INSTRUCTIONS 10
a. Parking 10
b. Lifting 10
c. Lowering 10
d. Travelling 10
e. Steering 12
f. Braking 12
g. Malfunctions 12
h. Emergency 12
7. Combination lock 13
a. Introduction 13
b. Main control code and functions 13
c. Unlocking procedures 13
d. Definitions of the indicator 14
8. BATTERY SAFETY, CHARGING AND REPLACEMENT 15
a. Description of the lithium-ion battery 15
b. Battery Decals 15
c. Safety Instructions, Warning Indications and other Notes 16
d. Power status display 23
e. Replacement 25
9. REGULAR MAINTENANCE 26
a. Maintenance checklist 26
b. Lubricating point 27
c. Inspect and re-fill hydraulic oil 28
d. Check the fuse 28
10. TROUBLE SHOOTING 30
11. CIRCUIT and HYDRAULIC DIAGRAM 31
a. **Electrical circuit diagram** 31
b. **Hydraulic circuit diagram** 33
12. SPECIALIZED STIPULATIONS FOR THE US- AMERICAN MARKET 34
a. Foreword/ Compliance 34
b. Identification plate 35
c. Description warning labels (only US- market) 36
d. Technical data for US market 37
13. DECLARATION OF CONFORMITY (valid, if sold within EU) 39

1. CORRECT APPLICATION

It is only allowed to use this electric pallet truck according to this instruction handbook.

The trucks described in this handbook are self-propelled electric power pallet trucks. The trucks are designed to lift, lower and transport palletized loads.

A wrong usage can cause human injuries or can damage equipment.
The operator/ the operating company has to ensure the correct usage and has to ensure, that this pallet truck is used only by staff, which is trained and authorized to use this truck.

The pallet truck has to be used on substantially firm, smooth, prepared, level and adequate surfaces. The truck is intended to be used for indoor applications with ambient temperatures between +5°C and + 40°C and for various transportation applications without crossing permanent obstacles or potholes. The work on ramps is not allowed. While operating, the load must be placed approximately on the longitudinal center plane of the truck.
Lifting or transporting people is forbidden.

If used on tail lifts or loading ramps, please ensure that these are used correctly according to the operating instructions.

The capacity is marked on capacity sticker as well on the Identification plate. The operator has to consider the warnings and safety instructions.
Operating lighting must be minimum 50 Lux.

<u>Modification</u>
No modifications or alterations to this pallet truck which may affect, for example, capacity, stability or safety requirements of the truck, shall be made without the prior written approval of the original truck manufacturer, its authorized representative, or a successor thereof. This includes changes affecting, for example braking, steering, visibility and the addition of removable attachments. When the manufacturer or its successor approve a modification or alteration, they shall also make and approve appropriate changes to capacity plate, decals, tags and operation and maintenance handbooks.
By not observing these instructions, the warranty becomes void.

2. DESCRIPTION OF THE PALLET TRUCK

a. Overview of the main components

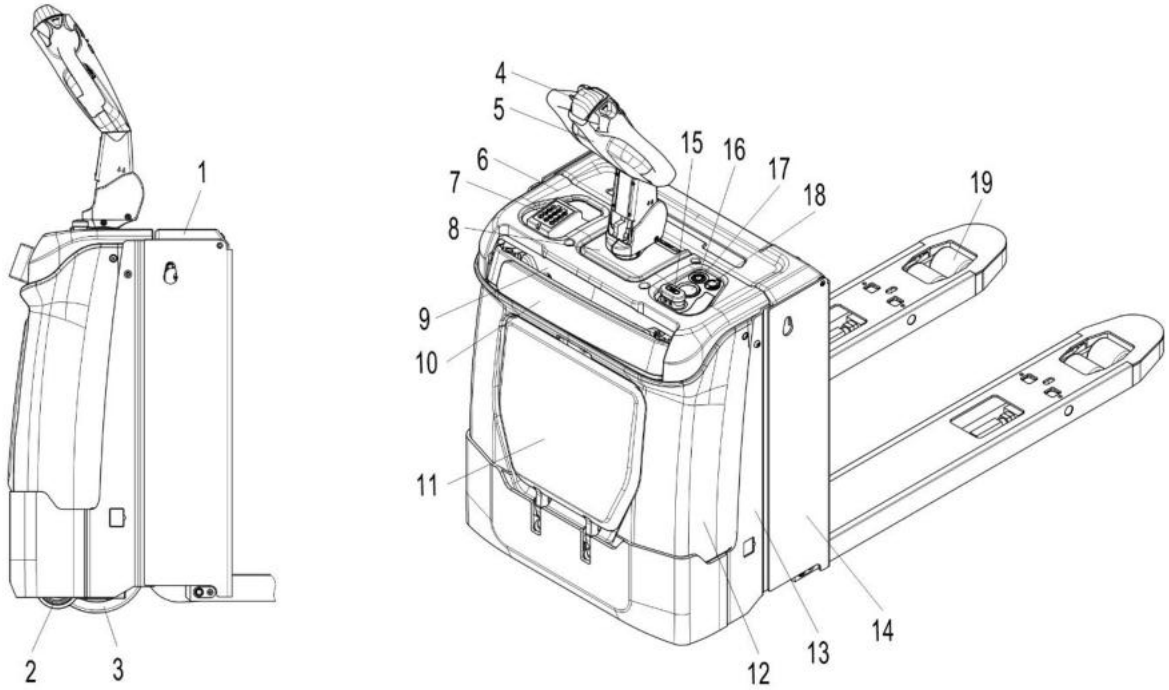

Fig. 1: Overview of the main components

1. Battery cover
2. Side wheels
3. Drive wheels
4. Safety (belly) button
5. Tiller
6. Protective cover
7. combination lock
8. Upper cover
9. Cover of protective arm
10. Protective arm subassembly
11. Pedal pad subassembly
12. Outer cover
13. Truck body
14. Chassis
15. Emergency button
16. Power switch
17. Instrument
18. USB Port
19. Load roller

b. Technical data

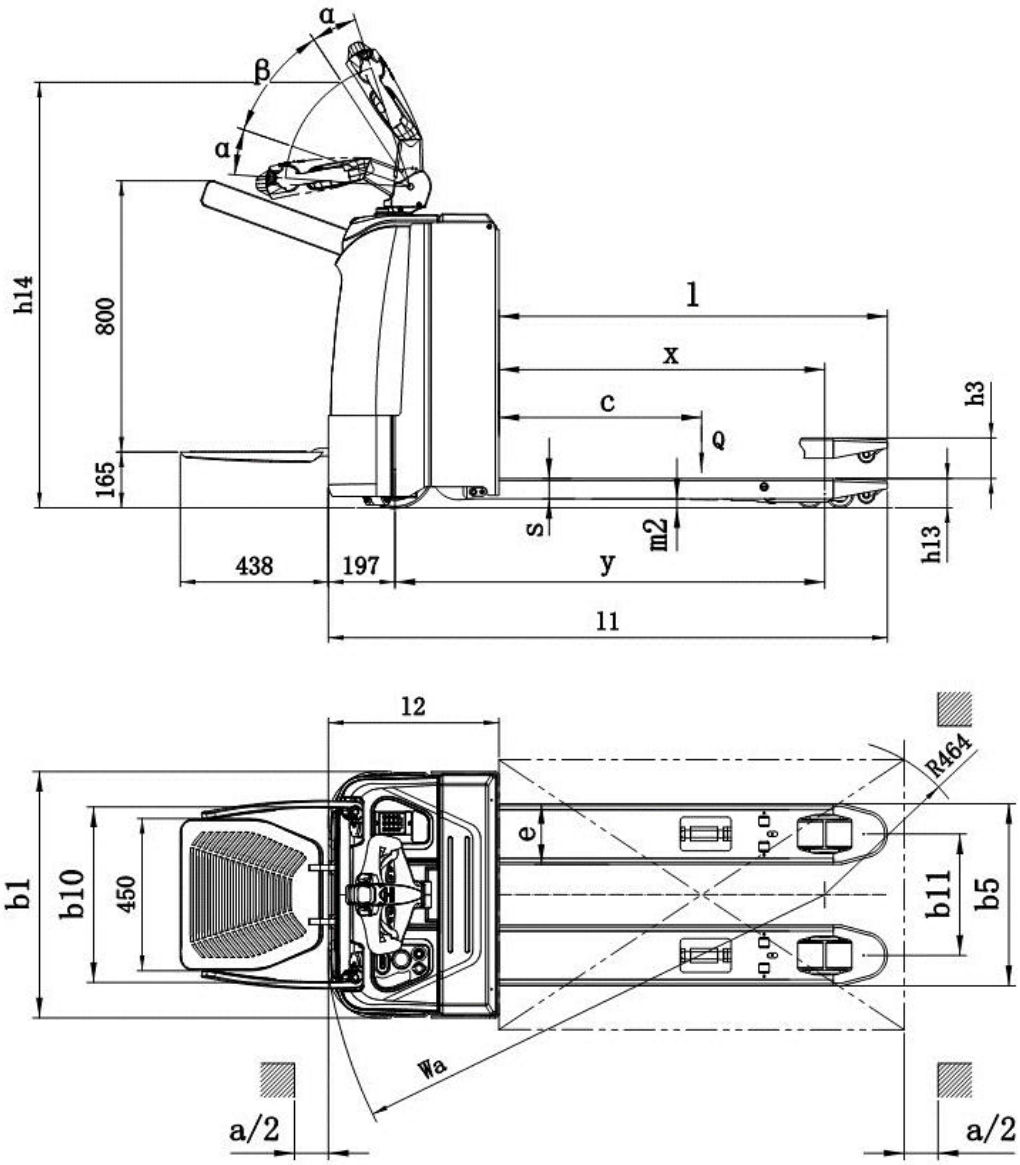

Fig. 2: Technical data

Table 1: Main technical data for standard version

Technical data in line with VDI 2198				
Identification	1.2	Model		PT20Li
	1.3	Drive		Electric
	1.4	Operation		Pedestrian/Stand
	1.5	Load capacity/rated load	Q(kg)	2000
	1.6	Load centre distance	c(mm)	600
	1.8	Load distance	x(mm)	899[1)]
	1.9	Wheelbase	y(mm)	1206[1)]
Wei-ghts	2.1	Net weight with battery	kg	*505*
	2.2	Axle loading,laden front/rear	kg	*695/1810*
	2.3	Axle loading,unladen front/rear	kg	*385/120*
Wheels/ frame	3.1	Tyres		PU
	3.2	Tyre size,front	∅ x w (mm)	∅230×70
	3.3	Tyre size,rear	∅ x w (mm)	∅82×82
	3.4	Additional wheels(dimensions)	∅ x w (mm)	∅100×40
	3.5	Wheels,number front/rear(x=driven wheels)		1x+2/2 or 4
	3.6	Tread width,front	b_{10} (mm)	520
	3.7	Tread,width,rear	b_{11} (mm)	360
Basic dimensions	4.4	Lift	h_3 (mm)	120
	4.9	Height of tiller	h_{14} (mm)	1070/1260
	4.15	Height,lowered	h_{13} (mm)	85
	4.19	Overall length	l_1 (mm)	1655
	4.20	Length to face of forks	l_2 (mm)	505
	4.21	Overall width	b_1 (mm)	730
	4.22	Fork dimensions	s/e/l	60/180/1150
	4.25	Width across forks	b_5 (mm)	540/685
	4.32	Ground clearance(centre of wheelbase)	m_2 (mm)	25
	4.34	Aisle width for pallets 800×1200 lengthways	Ast(mm)	2086[1)]
	4.35	Turning radius	Wa (mm)	1422[1)]
Performance data	5.1	Travel speed laden/unladen	km/h	*7/8*
	5.2	Lift speed,laden/unladen	mm/s	47/64
	5.3	Lowering speed,laden/unladen	mm/s	60/59
	5.8	Max. gradeability,laden/unladen	%	*8/15*
	5.10	Service brake		regenerative
Electrisc	6.1	Drive motor,output at S2 60min	kW	1.4
	6.2	Lift motor,output at S3 10%	kW	2.2
	6.3	Battery as per DIN 43531/35/36 A，B，C，no		no
	6.4	Battery voltage/nominal capacity	V/Ah	24/150
	6.5	Battery weight	kg	*80*
	6.6	Energy consumption as per EN 16796	kWh/h	*0.188*
Misc.	8.1	Type of drive control		AC-speed control
	8.4	Sound pressure level at operator’s ear as per EN12053	dB(A)	*<70*
	8.6	Steering		Electric steering

c. Description of the safety devices and warning labels (Europe and other, excepting USA)

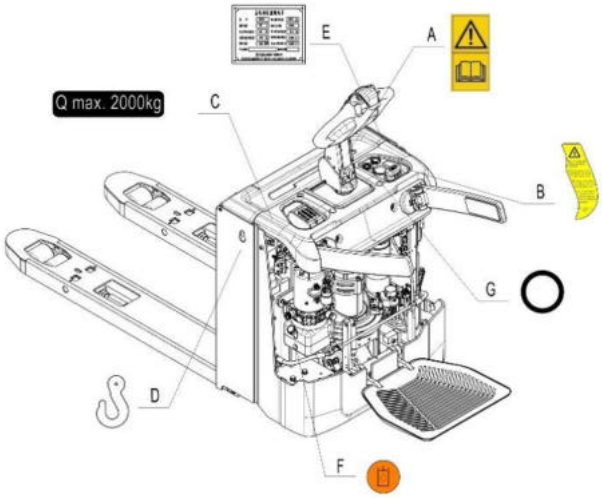

Fig. 3: Safety and warning labels

1. Sticker to observe and follow this instruction
2. Warning sticker
3. Capacity label
4. Crane hook label
5. Identification plate (ID plate)
6. Oil filling decal
7. Indication decal

The truck is equipped with an emergency button （15），which stops all lifting-, lowering-, driving- functions and engages the electromagnetic brake when it is activated by pressing。Pull out the emergency button to restart the truck after checking functions of the controller。Press the power button (16) and start the truck via RFID or manually enter the password. To prevent unauthorized access, press the power button or the “X” button on the combination lock panel if the truck is inoperative. The truck is equipped with a safety (belly) button (4) which switches the driving function away from the operator, if the truck travels towards the operator and the tiller is activated in the tillers operating zone. Follow the instructions given on the labels and decals. Replace the label and decals in time if they are damaged or missing.

d. Identification plate

Model	**PT20Li**	**Size of forks**	**XXX**
Serial No.		**Year of manuf.**	**XXX**
Rated capacity	**XXX**	**Load center distance**	**XXX**
System voltage	**XXX**	**Nominal power**	**XXX**
Net weight without the battery	**XXX**	**Battery mass min/max**	**XXX**
Noblelift Intelligent Equipment Co., Ltd. 528 Changzhou Road, Taihu Sub-district, Changxing, Zhejiang 313100 China			CE

Table 2：Identification plate

Check the ID plate taped on the truck for contents and type.

3. WARNINGS, RESIDUAL RISK AND SAFETY INSTRUCTIONS

DO NOT

- Put foot or hand under or into the lifting mechanism.
- Allow other person than the operator to stand in front of or behind the truck when it is moving or lifting/lowering.
- Overload the truck.
- Put foot in front of the wheels, injury could result.
- Lift people. People could fall down and suffer severe injury.
- Push or pull loads.
- Side or end load. Load must be distributed evenly on the forks.
- Use the truck with unstable or unbalanced load.
- Use truck without manufacturer's instructions manual.
- Lifted loads could become unstable at wind forces. In the case of wind forces do not lift the load if there is any influence to the stability.

Watch difference in floor levels when driving. Load could fall down or the truck could get uncontrollable.

Keep watching the condition of load. Stop operating the truck if load becomes unstable. Brake the truck and activate the emergency button (12) by pulling when the load is sliding on or off the truck. If the truck has any malfunctions, follow instructions in chapter 10. Practice maintenance work according to regular inspection. This truck is not designed to be water resistant. Use the truck under dry condition. Prolonged continuous operation might cause damage of the power pack. Stop operation if the temperature of the hydraulic oil is too high.

- When operating the electric pallet truck, the operator has to wear safety shoes.
- The truck is intended to be used for indoor applications with ambient temperature between +5°C and + 40°C (41℉～104℉).
- The operating lighting must be minimum 50 Lux.
- Operating the truck on the ramp is not allowed.
- To prevent unintended sudden movements when not operating the truck (i.e. from another person, etc.), cut off the power first.
- To avoid unintended impact between the foldable pedal and other objects, especially the risk of crash or shear on the way forward, please always be in the safe speed when driving.

4. COMMISSIONING, TRANSPORTING, DECOMMISSIONING

a. Commissioning

Table 3: Commissioning data

Model	PT 20Li
Commissioning weight [kg]([lbs])	505 kg (1113 lbs)
Dimensions [mm]([in])	1565x730x1365(61.6 28.8 x53.7)

After receiving our new pallet truck or for re-commissioning, please do the following before (firstly) operating the truck:

- Check if are all parts included and not damaged.
- Make sure the multifunctional tiller is assembled correctly.
- Check that battery is charged (follow chapter 8).
- Do the daily inspections as well as the functional check.

b. Hoisting/ transportation

For transporting, remove the load, lower the forks to the lowest position and fix the truck safely with dedicated hoisting equipment according to the figure 4.

Hoisting

USE DEDICATED CRANE AND HOISTING EQUIPMENT
DO NOT STAND UNDER THE SWAYING LOAD
DO NOT WALK INTO THE HAZARDOUS AREA DURING HOISTING

Transportation

Fix the truck firmly on trucks or vans when transporting.

Lower forks and parking the truck safely.
As shown in the Fig. 5, fix one end of the hoisting-used strapping tape on both sides of the truck, and fix another end on the transporting truck.

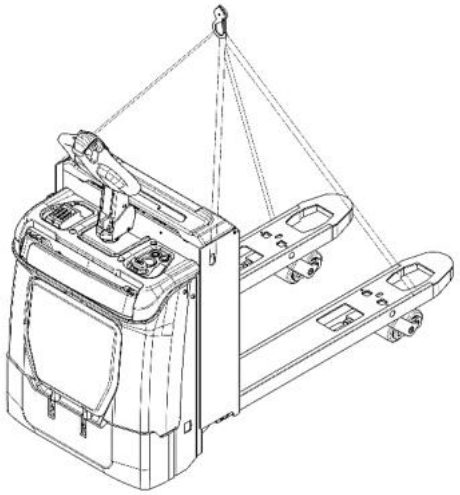

Fig. 4：Fixing points when hoisting

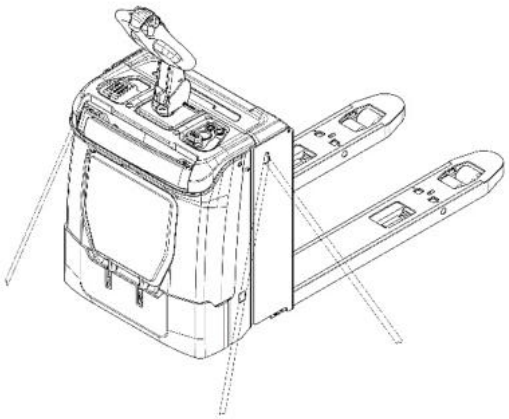

Fig. 5：Fixing points when transporting

c. Decommissioning

For storage, remove the load, lower the truck to the lowest position, grease all greasing points mentioned in this instruction manual (regular inspection), and eventually protect the truck against corrosion and dust. Remove the batteries and jack the truck safely, so that there will be no flattening after storage.
For final decommissioning, hand the truck to a designated recycling company. Oil, batteries and electric components must be recycled due to legal regulations.

5. DAILY INSPECTION

This chapter describes pre-shift checks before putting the truck into operation.
Daily inspection is effective to find the malfunction or fault on this truck. Check the truck on the following points before operation.

Remove load from truck and lower the forks.

DO NOT USE THE TRUCK IF ANY MALFUNCTION IS FOUND.

- Check for scratches, deformation or cracks.
- Check if there is any oil leakage from the cylinder.
- Check the function of driving with tiller in its vertical position.
- Check the smooth movement of the wheels.
- Check the function of the emergency brake by activating the emergency switch.
- Check the braking function of the proximity switch of the tiller.
- Check the lifting and lowering functions by operating the buttons.
- Check if all bolts and nuts are tightened firmly.
- Visual check if there are any broken electric wires.
- Check if the load backrest damaged or installed correctly (if it is equipped).

6. OPERATING INSTRUCTIONS

BEFORE OPERATING THIS TRUCK, PLEASE FOLLOW THE WARNINGS AND SAFETY INSTRUCTIONS (SEE CHAPTER 3).

Please ensure that cargos are settled on the pallet stably, and implement regular inspection.

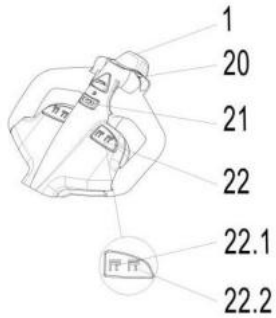

Fig. 6：Distribution of buttons on tiller

Pull out the emergency button (9), long press the power button (10), activate the truck via RFID or enter password manually. Press the horn button (21) to activate the audible warning signal.

a. Parking

DO NOT PARK THE TRUCK ON INCLINED SURFACES.

The truck is equipped with an electromagnetic fail-safe stopping and parking brake.
Always lower the forks fully and press down the emergency button (9).

b. Lifting

DO NOT OVERLOAD THE TRUCK! MAXIMUM CAPACITY OF THIS TRUCK IS 2000KG(4400lbs)

Travel with the lowered forks fully underneath the pallet and press the lifting button (22.1) until the pallet is lifted at your desired lifting height.

c. Lowering

Press the lowering button (22.2) carefully.
Lower the load until the forks are clear of the pallet, then drive the truck carefully out of the load unit.

d. Travelling

TRAVEL ON INCLINED SURFACE ONLY WITH THE LOAD FACING UPHILL (see fig. 7).
DO NOT TRAVEL ON INCLINED SURFACE MORE THAN THE SPECIFIED TECHNICAL DATA。

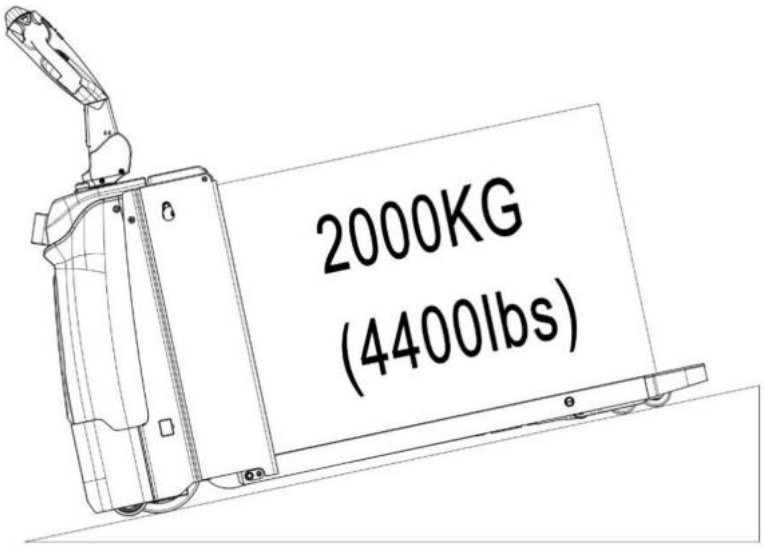

Fig. 7：Traveling on the ramp

Long press power button (10), activate the truck by combination lock, move the tiller to the operation position (‘F’, see Fig. 8). Turn the accelerator knob to the desired direction forward ‘FW.’ or backward ‘BW.’ (Fig. 8)

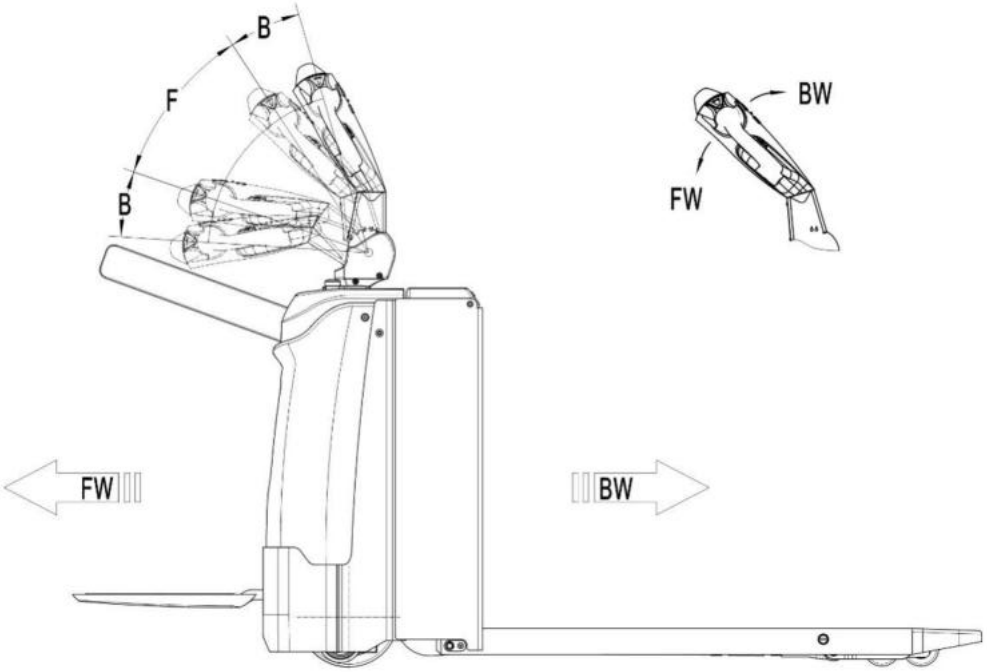

Fig. 8：Operating direction

Control travelling speed by operating the accelerator (20) carefully until it reaches your desired speed. If you move the accelerator back to the neutral position, the controller will decelerate the truck until the truck stops. If the truck stops, the parking brake will be engaged.

Drive the truck to the destination carefully. Watch the route conditions and adjust the travelling speed by operating the accelerator.

e. Steering

⚠ Electrical power steering (EPS) utilized, be careful when operating.
Steer the truck by moving the tiller to the left or right side

f. Braking

⚠ THE BRAKING PERFORMANCE DEPENDS ON THE TRACKCONDITIONS AND THE LOAD CONDITIONS OF THE TRUCK.

The braking function can be activated in several ways:

- By moving the accelerator (20) to the initial ‘0’ position or by releasing the accelerator, the regenerative braking is activated. The truck brakes until it stops.
- By moving the accelerator (20) from one driving direction directly to the opposite direction, the regenerative braking is activated until the truck starts traveling into the opposite direction.
- The brake activated and the truck stopped when the tiller is located in the braking zones (‘B’) or the tiller is released and moves automatically to the upper braking zone (‘B’).
- The safety (belly) button (1) prevents the operator from crush. If this button is activated, the truck decelerates and/or starts traveling into backwards direction (‘Bw.’) for a short distance and stops then. Please consider that this button still works if the truck is not traveling with tiller in operating zone.

g. Malfunctions

If there are any malfunctions or the truck is inoperative, please stop using the truck and press down the emergency button (9). If possible, park the truck in a safe area and press the power button or the “X” button on the combination lock panel. Inform the manager or call your service immediately. If necessary, move the truck out of the operating area by using dedicated towing/ hoisting equipment.

h. Emergency

In emergencies or in the event of tipping over, keep a safe distance immediately. If possible, push the emergency button (9) and all electrical functions will be stopped.

7. Combination lock

This serial is equipped with the combination lock. Pressing the power button (10) and it will be activated.

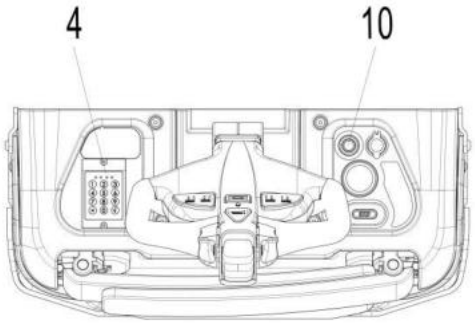

Fig. 9：Combination lock and power button

a. Introduction

Under the control of the combination ignition switch (refer as “combination lock” below), the truck will not be allowed to be activated before entering an authorized password. The main purpose of this device is to prevent the unauthorized person from operating the truck. Also, it serves as an anti-theft and security enhancement.

b. Main control code and functions

The current combination lock supports max 5 RFID cards and 1 set of password. Each set of password is constituted of 4 digits, from 0-9.

⚠ Please check the administrator password in the separate instruction manual. The factory default password is “1234”, and please refer to the separate instruction manual for password change procedures.

c. Unlocking procedures

1. ID Card

1.1 Place the ID card close to the combination lock panel, and if the ID card is available, then there will be a short buzz come from the combination lock. Subsequently, the blue indicator always on, which means the electric lock switch can output data correctly, and the combination lock is in working order.

2. Password

2.1 Enter the password, press the “ √ ” button then release it. The truck can be operated if the password is correct.

2.2 Press the “×” button then release it, and the truck will be turned off.

2.3 Re-enter the password to re-operate the truck.

d. Definitions of the indicator

Red：fault code

Yellow：waiting for further instruction

Blue：active

Green：power on

8. BATTERY SAFETY, CHARGING AND REPLACEMENT

a. Description of the lithium-ion battery

The lithium-ion battery is a battery with rechargeable cells, the battery is designed for industrial trucks and can withstand related vibrations during operation. The battery is equipped with special connections for charging and discharging operations. Do not try to install or connect improper connectors to the battery.

The battery is equipped with BMS – battery management system, which performs the control of battery condition and implements related safety protocols to protect the battery and cells from damages caused by operation or environmental conditions. The BMS controls the following safety functions and conditions: voltage, temperature, undervoltage, overvoltage, overtemperature, overcurrent, short circuit, etc. The internal resistance of lithium battery is generally low, which minimizes heat generation and maximizes the available power of the truck.

Temperature range for using the battery is from +5°C to +40°C. Low temperatures reduce the effective battery capacity, high temperatures reduce the battery's life time. The temperature difference between the two sides of the battery shall not exceed 5°C.

Only approved battery chargers must be used to charge the lithium battery.

b. Battery Decals

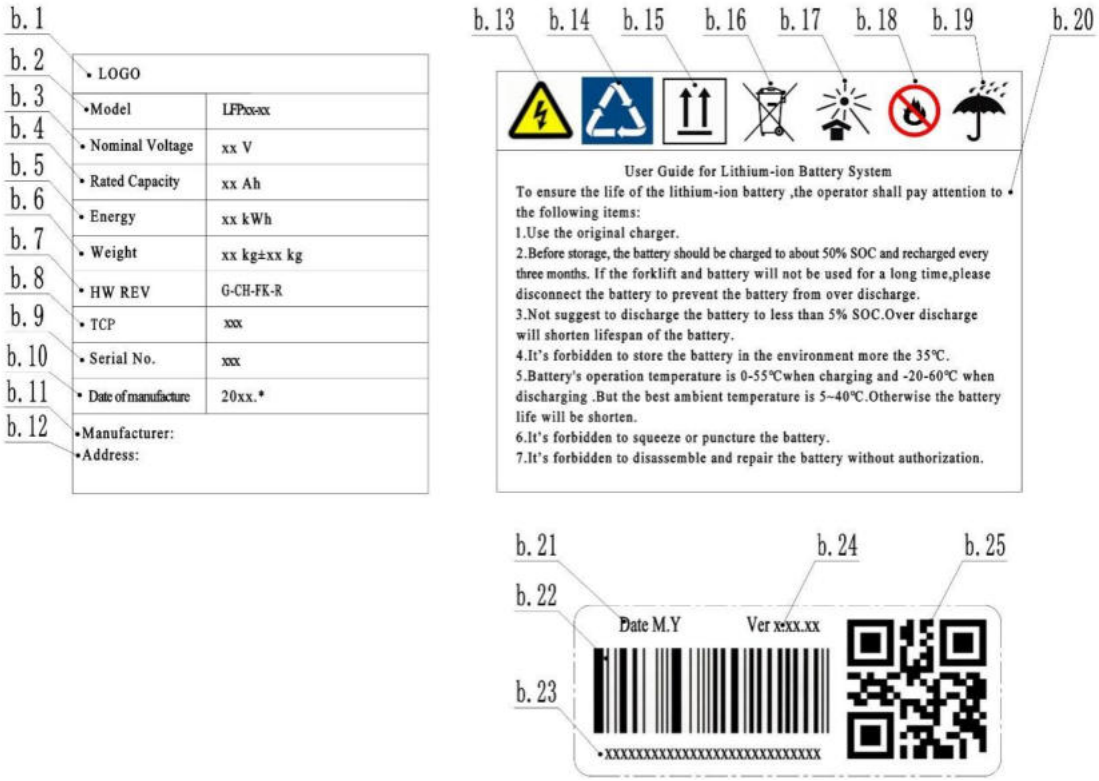

Fig 10：Battery Decals

Table4：Battery Decals

Item	Description	Item	Description
b.1	Manufacturer logo	b.14	Rechargeable logo
b.2	Battery model	b.15	Vertical upward packing, transportation
b.3	Nominal voltage of battery	b.16	No putting into ordinary garbage bins
b.4	Rated capacity of battery	b.17	No long-term exposure to sunshine
b.5	Battery energy of battery	b.18	Stay away from fire
b.6	Weight of battery	b.19	Keep out of the rain
b.7	Configuration of battery	b.20	Guide to use
b.8	Protocol version of battery	b.21	Production date
b.9	Production serial No.	b.22	Battery information bar code
b.10	Production date	b.23	Bar code interpretation
b.11	Name of manufacturer	b.24	Software version of battery
b.12	Manufacturer's address	b.25	Battery information by 2D code
b.13	Electrical hazard marker		

Service mass is indicated on the battery data plate, the center of gravity is located approximately at middle of the battery case.

c. Safety Instructions, Warning Indications and other Notes

Safety regulations for handling lithium-ion batteries

Do not try to make any repairs or servicing of lithium batteries. Replacement of parts is not assumed.

Risk of electric shock and burning

The battery's charging and discharging connectors have open terminals, avoid any body contacts, contamination or direct contacts with objects which can cause short circuit connection of terminals. Use necessary pre-cautions and protective caps to secure the open terminals. The connectors should be maintained in clean and dry conditions.

Use only batteries designed and approved by the manufacturer for the truck. Do not try to modify or alter the battery.

Any damage or defects to the charger can result in accidents. Use only charger approved by the manufacturer of the truck, which is suitable for used battery.

In case charger has any damages or defects, exclude the charger from operation and contact your service provider. Do not modify or try to repair the charger.

Improper use of charger or use of wrong charger can cause damages to a battery or charger. Follow the required charger specifications; If the operation voltage of the charger is out of the applicable voltage range, the charger or battery may be damaged causing serious safety risks. The charger in use must be approved by the battery (truck) manufacturer.

Reversed connection of charging plug is prohibited. Follow the instruction for correct connection. For disconnection of charging plug use dedicated grip and never pull out the plug by means of cable.

Stop charging immediately if any abnormalities are detected, e.g. severe temperature increase, deformation of battery case, smoke, noise etc.

Intermediate charging

Lithium batteries support so called opportunity charging. The lithium battery, which is not fully discharged can be charged in any time. However, frequent opportunity charging not to the full charging state and stop of charging process before the appearance of corresponding indication of charger may result in dis-balance voltage of cells which increases the battery BMS calculation error. In order to effectively deal with this phenomenon, charge the battery in full allowing the automotive balancing process to be completed at least once a week.

Do not charge a fully charged battery

Note that in order to prevent the battery from continuing restart of charging under fully charged condition causing reduction of battery lifetime, the BMS has a protection function that prohibits recharging of fully charged battery. The charger will not work while battery is fully charged.

Potential hazards

If equipment is used according to its design purpose, following the correct operations procedures, there are no hazards anticipated.

The following hazards can arise in the event of improper use:

- Physical damage to the battery in case a battery falls or is deformed through impacts. Mechanical damages can cause leakages of harmful materials, fire or battery explosion.
- Short circuits may be caused by short connection of battery terminals, for instance, by water or other intentional/unintentional short connections.
- Temperature damages caused by placing of batteries in overheated environment conditions or being exposed to impact of fire, open sunlight etc. can cause leakages of harmful materials, fire or battery explosion. ·

In order to avoid fire, explosion and/or leakage of harmful materials, a safe place for storing non-functional or damaged batteries until the service arrives on site must satisfy the following criteria:

- Do not store in places where personnel is located.
- Do not store in places with valuable objects and close to valuable objects.
- A Class D fire extinguisher must be available on demand.
- There should not be any fire or smoke detectors in the storage area in order to ensure that an automatic fire detection system is only activated in the event of actual danger (e.g. flames).
- No ventilation intake pipes should be in the facility to exclude spreading of discharged content within a building. ·

Examples of where to store a non-functional battery:

- Roofed outdoor position.
- Ventilated container.
- Covered fire resistant box with pressure and smoke discharge option.

Symbols - Safety and Warnings

Table 5: Symbols - Safety and Warnings

	Used lithium-ion batteries must be treated as hazardous waste. Lithium-ion batteries marked with the recycling symbol and the sign showing a crossed-out waste bin must not be disposed of with ordinary household waste.
	Avoid fire and short circuits causing overheating. Do not ignite or locate batteries close to open flame, heat sources or sparks. Keep lithium-ion batteries away from heat sources.
	Caution! Battery short-circuit is prohibited.
	Protect the lithium-ion battery from solar radiation or other forms of heat radiation. Do not expose the lithium-ion battery to heat sources.

Explosion and fire hazard

Physical damage, thermal impacts or incorrect storage in the event of a defect can result in explosions or fire. The battery materials can be flammable.

Particular hazard from combustion products

The lithium batteries may be damaged by a fire. When extinguishing a lithium battery fire, the following information must be taken into consideration.

Contact with combustion products can be hazardous

Fire produces combustion products, which can occur in the form of smoke, through leaking fluids, escaping gases, debris as well decomposition products of certain chemicals. These combustion products are substances that enter the body through the respiratory tract and/or the skin, can produce and adverse effects such as choking.

Avoid contact with combustion products.
Use protective equipment.

Special firefighting protective equipment

Use self-contained breathing apparatus.
Wear protective equipment.

Additional firefighting instructions

To prevent secondary fires, the lithium-ion battery must be cooled from the outside.

Suitable extinguishing agents

- Carbon dioxide extinguisher (CO2)
- Water (not on mechanically opened or damaged batteries) ·

Unsuitable extinguishing agents

- Foam
- Grease fire extinguishing agents
- Powder extinguishers
- Metal fire extinguishers (PM 12i extinguishers)
- Metal fire powder PL-9/78 (DIN EN 3SP-44/95)
- Dry sand

Instructions for cooling an overheated, non-physically damaged battery

This type of damage may be caused by a short circuit inside the battery, which may result in leakage of harmful materials, fire or battery explosion.

Material discharge

Battery electrolyte fluid can be hazardous

Electrolyte fluid can be discharged if the battery is physically damaged. Avoid its contact with skin or eyes. If the contact happened:

- Rinse the affected parts with big amount of water and request for medical assistance immediately.
- In case of skin irritation or if any substances are breathed in request the medical assistance immediately.

Precautionary measures for personnel

- Keep personnel away, avoid any contact with smoke or discharged materials.
- Block off the affected area and ensure its reasonable ventilation.
- Wear personal protective equipment. If vapors, dust or aerosols are presented use self-contained breathing apparatus.

Precautionary measures for the environment

Do not allow spilled fluids to enter the water system, drainage system or the underground water.

Cleaning measures

The leaked fluid must be removed professionally following the related protocols.

Battery lifetime, maintenance and storage

The lithium-ion batteries are maintenance-free.

Deep discharge can damage the battery

Self-discharge without periodical recharge can lead the battery to fully discharged state. Full discharge shortens the service life of the battery and can cause deep discharge and activation of related safety protocols when battery will not be able to be charged anymore.

Before a long period of inactivity, the battery must be charged to 40%~60%.
Control the level of battery charge at least every 12 weeks and re-charge if necessary.
The temperature range for storing of the battery should be within the range of 0°C to 30°C.

If the battery is deeply discharged or if the battery temperature is below the permissible level, the battery cannot be charged. Deeply discharged batteries can never be charged. Due to the risk of condensate formation, batteries that have been stored at 0°C or below must only be charged after natural warming up to at least +5°C, forced heating is forbidden.

Instructions for safe handling of batteries

- Do not modify the battery.
- Do not open, damage, drop, penetrate or deform the battery.
- Do not throw the battery into a fire.
- Protect the battery from overheating.
- Protect the battery from direct sun light.
- Follow storage and charging procedures
- Protect the battery from water damages and other impacts

Failure to comply with these safety instructions can result in fire and explosion or the leakage of harmful materials.

Pre-shift checks before the system is put into operation

Check that the battery is in its normal condition, has no evidence of damages, leakages, abnormal findings, e.g. high temperature, smell, smoke etc. The surface of the battery should be clean and dry, without evidence of water damages, marks of rust on terminals and housing (if applicable). Connecting cables and plugs are in good condition.

Faults

If any damage is found to the battery or battery charger contact the service provider

immediately.

Do not open the battery or attempt to repair it.

Disposal and transport of a lithium-ion battery

Instructions for disposal

Lithium-ion batteries must be disposed in accordance with the relevant national environmental protection regulations. Batteries must be treated as hazardous waste. Batteries must not be disposed with ordinary waste.

Shipping information

The lithium-ion battery is a hazardous material. The applicable regulations must be fulfilled during transportation.

Shipping functional batteries

Functioning batteries can be shipped in accordance with the related regulations

Shipping faulty batteries

To transport faulty lithium-ion batteries, contact the service provider. Faulty lithium batteries require following of special transporting procedures.

d. Power status display

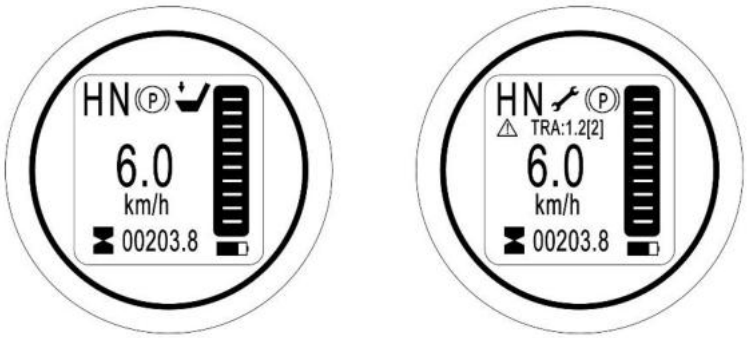

Normal working status　　Fault status

Fig. 11：The discharging instrument

Hourmeter

Digital display the current vehicle working time; Unit: h;

Battery level display

Display the battery icon and the current battery level (there are 10 cells, each cell represents 10% of the battery);

Fault code

Displays the currently occurring fault code (TRA for drive controller failure, STR for steering controller failure);

Operating mode and vehicle speed

Display operation mode and current speed: unit km/h;

Status display

The upper left corner is the vehicle status display bar, and the speed status display (normal speed and turtle speed status switch);

The forward and backward state of the vehicle is switched, the brake brake state is displayed, the lifting and descending state is switched, and the handle interlock state is displayed.

Charging the Battery with External Charger

Maintenance personnel

Batteries may only be charged, serviced or replaced by trained personnel. These operating instructions and the battery manufacturer's instructions must be observed when performing these operations.

Park the truck securely before carrying out any work on the batteries.

General information

- The charge status of the battery is indicated by LEDs on the battery charger.
- The charging time depends on the battery charge status. The time it takes to charge an almost fully depleted battery depends both on the battery capacity and the charge current. The approximate duration can be calculated as follows:
  Charging time = capacity of battery / charge current of battery charger.
- The lithium-ion battery can also be used when not fully charged. In this case, the remaining operating time is reduced.
- Charging continues automatically after a mains failure is restored. Charging can be interrupted by pulling out the mains connector and considered as a partial charge. ·

The battery temperature rises by approx. 13°C during charging. Battery charging should only start when the battery temperature is below 40°C. The battery temperature before charging should be at least 5°C.

Status of the LEDs on the battery charger

When the battery charger is connected to the battery and to the power supply, the LEDs on the charger indicate the following:

Table 6: LED

LED lit	Status
Green	The battery is fully charged
Red	Battery is charging

If the green LED does not light up or if the red LED lights up permanently or not at all, this indicates a fault.

- Please use the supplied charger for charging
- Before using the charger, please fully understand the instructions of the charger instructions
- Always follow these instructions
- The room, where you are charging must be ventilated
- The exactly charge status can be only checked from the discharge indicator. To control the status, the charging must be interrupted and the truck must be started

The external charger

Parking the truck at a safe field which is dedicated for charging with a specific power resource.

Lower the forks and remove the load.

Turn off the power, connect the charging connector (23) and power connector (24).

Start charging.

After fully charged, cover the battery compartment and reconnect the battery connector.

Charging finished, disconnect the connector from the socket, and place it into the designated bag.

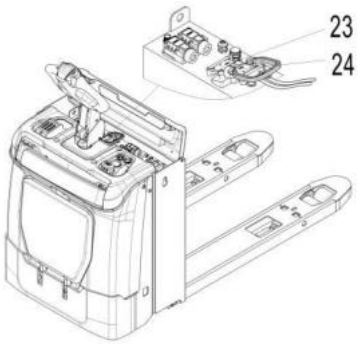

Fig. 12：Charging

Table 7: Charger specification

Model	Specification
PT 20Li	24V80A

e. Replacement

Parking the truck safely, press down the power button (10) and the emergency button (9) to turn off the truck. Open the battery compartment, disconnect the power cord, then hoisting the battery out to charge. The installation is opposite.

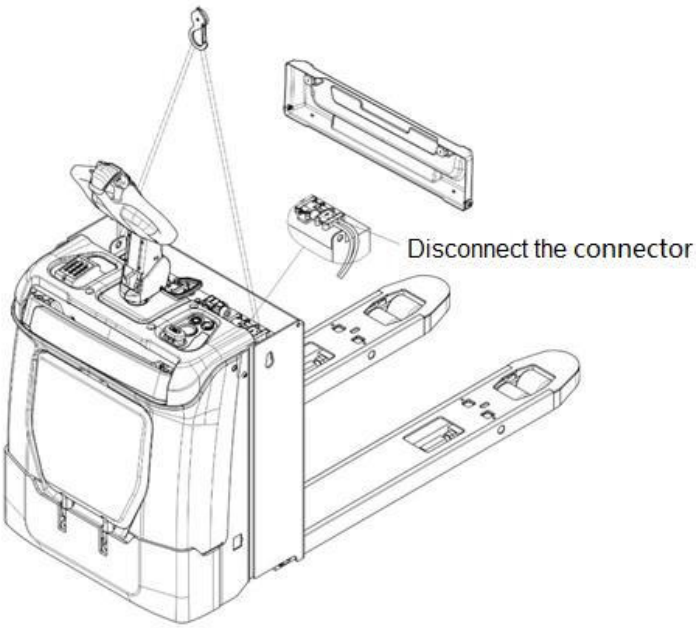

Fig 13：Battery replacement

9. REGULAR MAINTENANCE

- Only the authorized and trained personnel is allowed to maintain the truck.
- Before maintenance, please remove the load and lower the forks to the bottom.
- If you need to lift the truck, follow chapter 4b by using designated lashing or jacking equipment. Before working, put safety devices (for instance designated lift jacks, wedges or wooden blocks) under the truck to protect against accidental lowering, movement or slipping
- Please pay attention by maintain the tiller arm. The gas pressure spring is pre-loaded, and carelessness can cause injury.
- Use approved and from your dealer released original spare parts.
- Please consider that oil leakage of hydraulic fluid can cause failures and accidents.
- It is allowed to adjust the pressure valve only from trained service technicians.

If you need to replace the wheels, please follow the instructions above. The casters must be round and free of abnormal wear.
Please check the emphasized items in the maintenance list out.

a. Maintenance checklist

Table 8： Maintenance checklist

		Interval(month)			
		1	3	6	12
Hydraulic					
1	Check the hydraulic cylinder for damage noise and leakage		●		
2	Check the hydraulic joints for damage and leakage		●		
3	Inspect the hydraulic oil level, refill if necessary		●		
4	Replace the hydraulic oil (12 month or 1500 working hours)				●
5	Check and adjust the pressure valve (2000kg(4400lbs)+0/+10%)				●
Mechanical system					
6	Inspect the forks for deformation and cracks		●		
7	Check the chassis for deformation and cracks		●		
8	Check if all screws are fixed		●		
9	Check the push rods for deformation and damages		●		
10	Check the gearbox for abnormal sound and noise		●		
11	Inspect the wheels for deformation and damages		●		
12	Inspect and lubricate the steering bearing				●
13	Inspect and lubricate the pivot points		●		
14	Lubricate the grease nipples	●			

Electrical system					
15	Inspect the electric wiring for damage		●		
16	Check the electric connections and terminals		●		
17	Test the Emergency switch function		●		
18	Check the electric drive motor for noise and damages		●		
19	Test the display		●		
20	Check, if correct fuses are used		●		
21	Test the warning signal		●		
22	Check the contactor(s)		●		
23	Check the frame leakage (insulation test)		●		
24	Check function and mechanical wear of the accelerator		●		
25	Check the electrical system of the drive motor		●		
Braking system					
26	Check brake performance, if necessary, replace the brake disc		●		
Battery					
27	Check the battery voltage		●		
28	Clean the terminals for corrosion and damages		●		
29	Check the battery housing for damages		●		
30	Check the battery, fill in the distilled water if necessary	●			
Charger					
31	Check the main power cable for damages			●	
32	Check the start-up protection during charging			●	
Function					
33	Check the horn function	●			
34	Check the air gap of the electromagnetic brake	●			
35	Test the emergency braking	●			
36	Test the reverse and regenerative braking	●			
37	Test the safety (belly) button function	●			
38	Check the steering function	●			
39	Check the lifting and lowering function	●			
40	Check the tiller arm switch function	●			
General					
41	Check if all decals are legible and complete	●			
42	Inspect the castors, adjust the height or replace if worn out.		●		
43	Carry out a test run	●			

b. Lubricating point

According to the marked point in the maintenance checklist. The specification of the demand grease is: DIN 51825 standard grease.

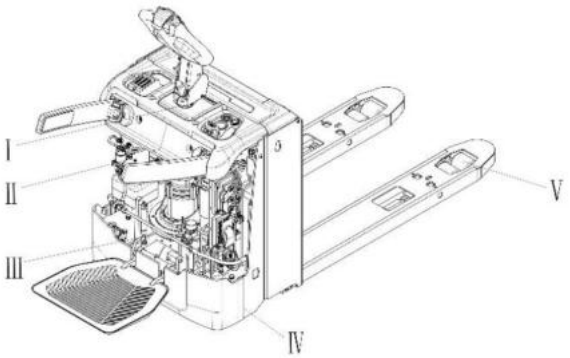

Ⅰ.EPS
Ⅱ.Hydraulic system
Ⅲ.Gear box
Ⅳ.Bearings of side wheels
Ⅴ.Bearings of load wheels

Table. 14：Lubricating point

c. Inspect and re-fill hydraulic oil

Table 9： Recommended hydraulic oil type according to the temperature

Ambient temperature	–5℃~25℃	>25℃
Type	HVLP 32，DIN 51524	HLP 46，DIN 51524
Viscosity	28.8-35.2	41.4 - 47
Volume	1.2L（0.32gal）	

Recycling and disposing of scrap materials, for example, scrap batteries, oil or other materials, undergoes national regulations. Let the dedicated recycling company to recycle and dispose scrap materials if necessary.
The oil level shall not be lower than the minimum demanded volume of the oil to start the truck.
Fill the oil to the recommended level if necessary.

d. Check the fuse

Remove the outer cover, fuses are in the position shown in the Fig. 14

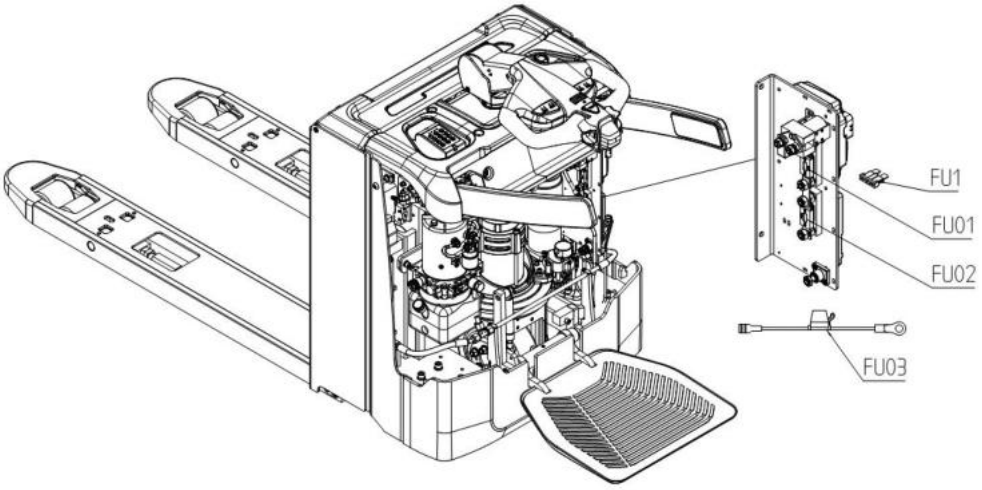

Fig. 15：Fuses

Table. 10：Specifications of fuses

	Specifications
Fuse FU01	200A
Fuse FU02	150A
Fuse FU03	30A
Fuse FU1	10A

10. TROUBLE SHOOTING

IF TRUCK HAS MALFUNCTIONS, FOLLOW THE INSTRUCTIONS IN CHAPTER 6.

Table 11：Trouble shooting

TROUBLE	CAUSE	REPAIR
Load can’t be lifted	Load weight too high	Lift only the max. capacity, mentioned on the ID-plate
	Battery low power	Charge the battery
	Lifting contactor failure	Check and contact with service support for replacement if necessary
	Hydraulic oil level too low	Check and eventually refill hydraulic oil
	Oil leakage	Repair the sealing of the cylinder
Oil leakage from air breathing	Excessive quantity of oil.	Reduce oil quantity.
Truck not starts operating	Battery is charging	Charge the battery completely and then remove the main power plug from the electrical socket.
	Battery not connected	Connect the battery correctly
	Fuse faulty	Check and eventually replace fuses
	Low battery	Charge the battery
	Emergency switch is activated	Turn the emergency switch clockwise
	Tiller in the operating zone	Move the tiller firstly to the braking zone.

If the truck has malfunctions and can’t be operated out of the working zone, jack the truck up and go with a load handler under the truck and safe the truck securely. Then move truck out of the aisle.

11. CIRCUIT and HYDRAULIC DIAGRAM

a. Electrical circuit diagram

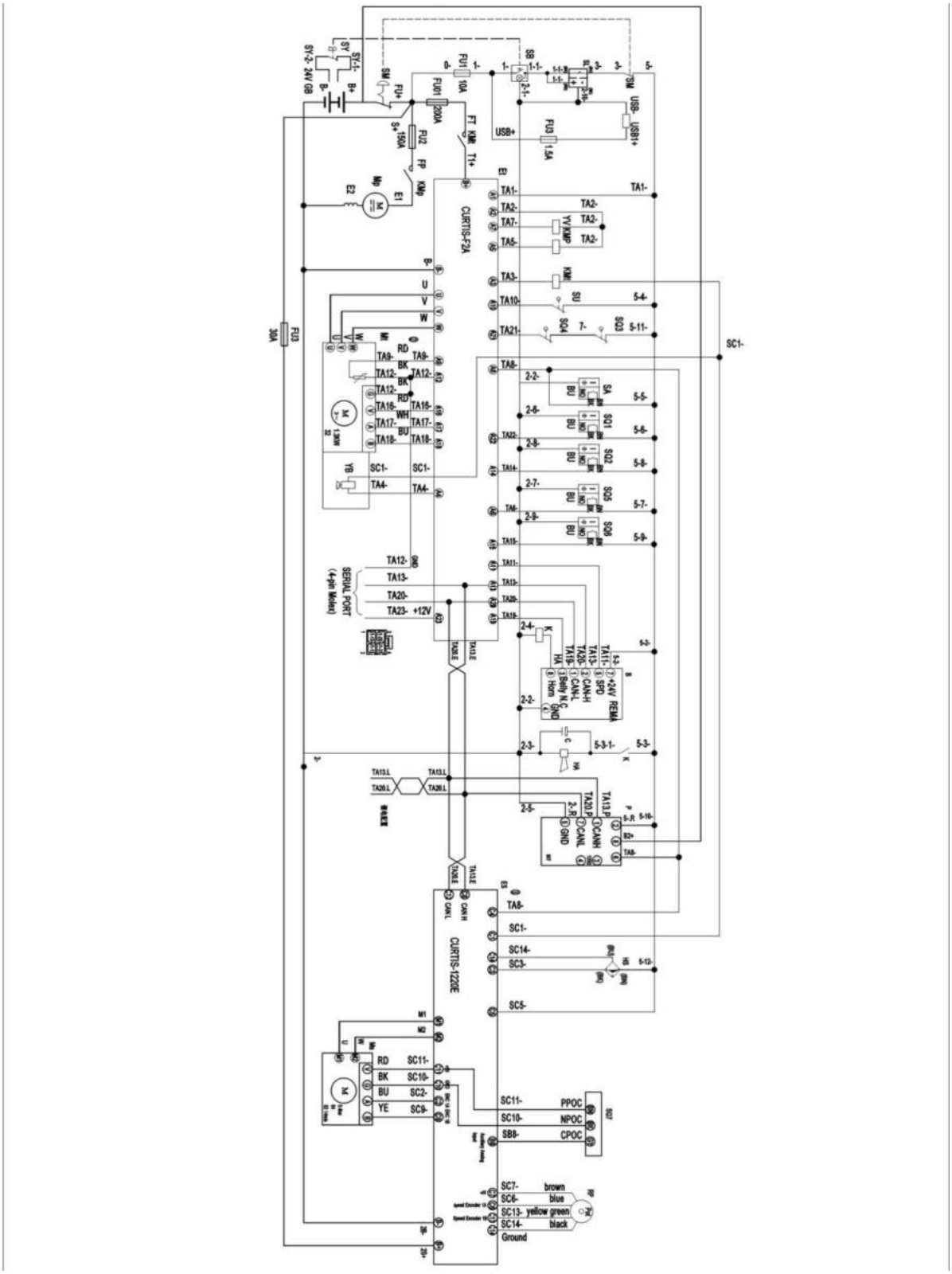

Fig. 16：Circuit diagram(EPS)

Table 12：Description of electrical diagram

Code	Item	Code	Item
GB	Battery	C	Capacitor
SM	AC switch	HA	Horn
FU01	Fuse 150A	SU	Micro switch
FU02	Fuse 80A	YV	Electromagnetic valve
FU03	Fuse 30A	SA	interlock switch
FU1	Fuse 10A	SB1、SB2	interlock switch
SY	Key switch	SJ	interlock switch
KMt	Main contactor	SL	Combination lock
Et	Controller	U	Charger
Mp	The motor of pump	HL	The indicator of charging
Mt	The motor of drive	XW	Power input wire
YB	Electromagnetic braking	USB	USB Plug-in
K	Relay	Ms	The motor of steering
P	Indicator	Es	The controller of steering
B	CAN tiller	Twin Pot	Twin potentiometer
SQ7	Sensors of the gear	HS	Proximity switch

b. **Hydraulic circuit diagram**

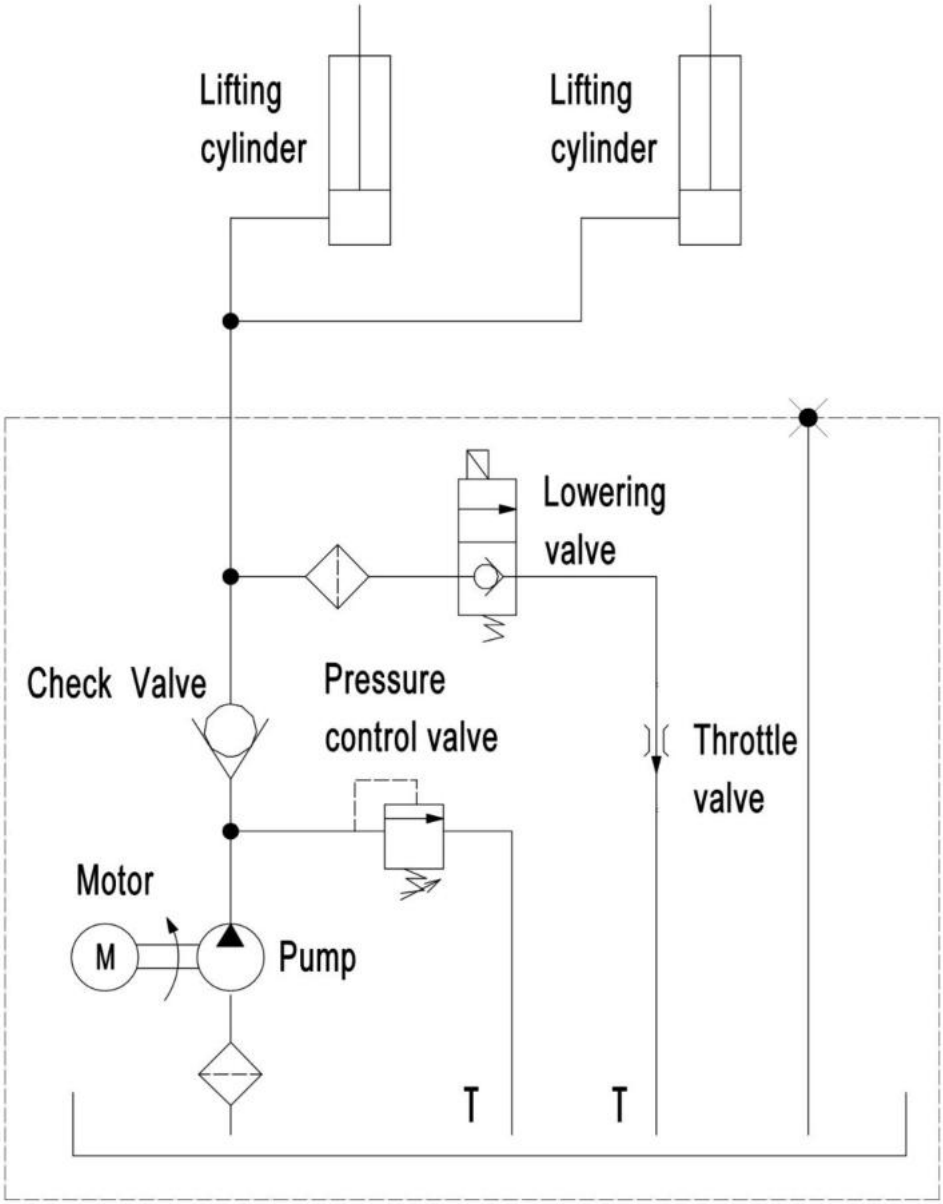

Fig. 17：Hydraulic circuit

12. SPECIALIZED STIPULATIONS FOR THE US-AMERICAN MARKET

The content in this chapter is specialized for the US-American market.

a. Foreword/ Compliance

Operating this truck requires knowledge which can be acquired from this instruction handbook. This handbook must be kept available throughout the entire period of use of the industrial truck.

IT IS LAW; YOU MUST BE TRAINED AND CERTIFIED TO OPERATE THIS TRUCK! READ AND OBEY ALL WARNINGS AND INSTRUCTIONS IN THIS MANUAL AND ON THE TRUCK!

Only properly trained operators are allowed to operate a powered industrial truck. Your employer must train you and certify, that you are qualified to operate this truck (required by OSHA § 1910.178). The training must satisfy OSHA requirements and as minimum the topics mentioned in this handbook. Depending on the context in this operating manual, the user can refer to several people, including the owner of the truck, anyone who leases or borrows this truck, and the operator as defined in ASME B56.1. Please pay attention to the section in ANSI/ITSDF B56.1 concerning the operator. In this standard, it is defined that the safe operation is the responsibility of the operator (ANSI/ITSDF B56.1, Part II, section 5.1.1). You and others can be seriously injured or even killed if you don't use this truck correctly. Before operating your truck, inspect your truck and ensure that it is in correct working order. This truck was designed and built to current industry and government standards. For more information see following:

- ANSI/ITSDF B56.1
- OSHA §1910.178 (Occupational Safety and Health Act)

⚠ DANGER This sign indicates hazard situations, if not avoided, will result in serious injury or death. The instructions or precautions to this message must be observed to avoid the potential risk of injury or death.

⚠WARNING If not followed, warning indicates hazard situations which may lead to moderate injury. The instructions or precautions to this message must be observed to avoid the potential risk of injury or death.

⚠ CAUTION If not followed, caution indicated situations which may lead to minor injury. Instructions or precautions must be observed to avoid minor injury.

b. Identification plate

1	**Truck Model**	9	**Option**
2	**Serial Number**	10	**Maximum Battery Capacity (Ah)**
3	**Supply Voltage (Volts)**	11	**Battery Weight Min/Max lbs. (kg)**
4	**Truck Weight with Max. Battery, lbs (Kg)**	12	**Battery Manufacturer Information**
5	**Truck Weight without Battery, lbs. (Kg)**	13	**Battery Model Number**
6	**Manufacturing Date (MM/YYYY)**	14	**Battery Amp Hour Rate**
7	**Load Center Distance (mm)**	15	**Maximum Capacity (Uniformly Distributed load)**
8	**B56.1 Standard Statement**	16	**Truck Manufacturer Information**

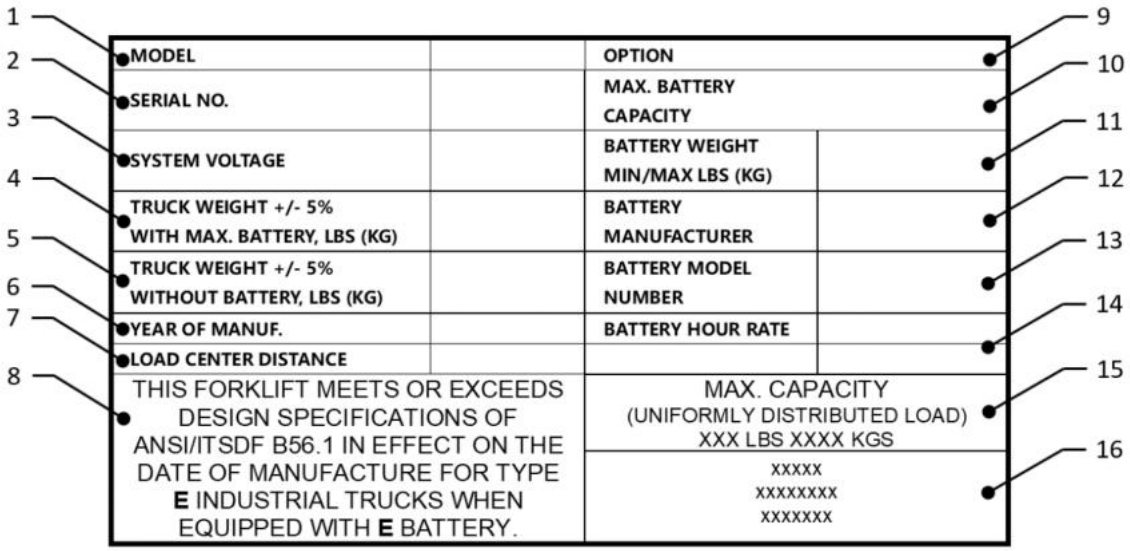

Fig. 18：Identification plate

c. Description warning labels (only US- market)

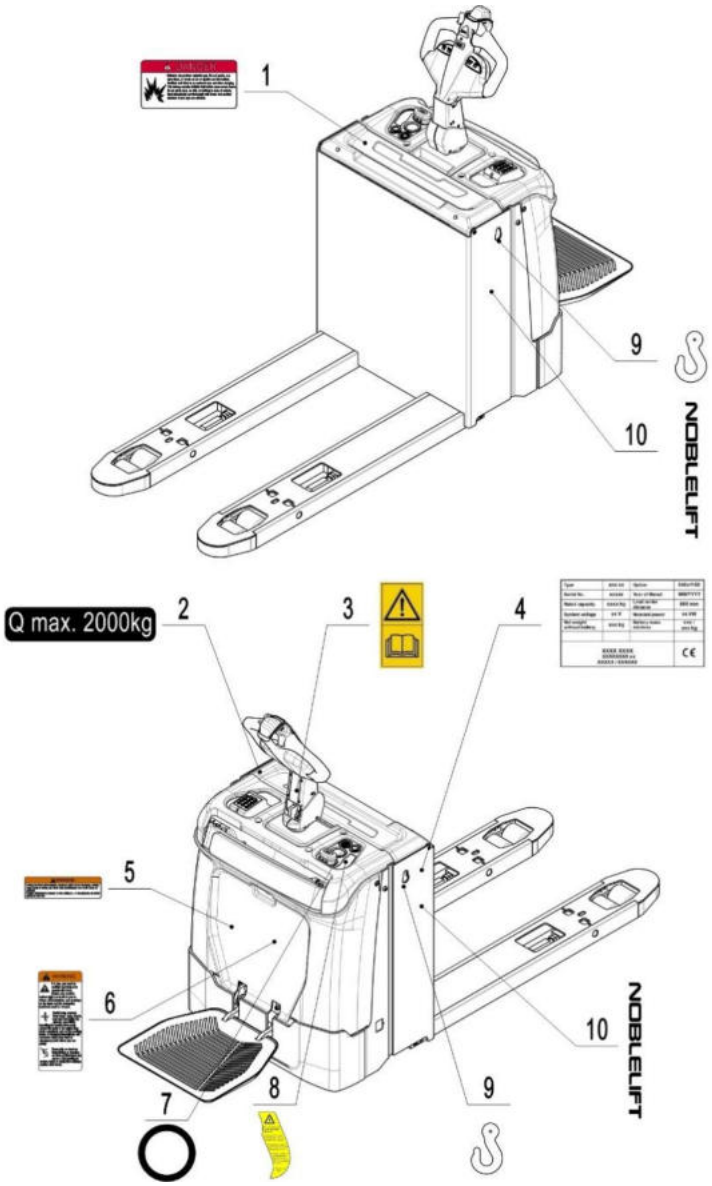

Fig. 19: Warning labels and safety devices (only USA)

1. Sign danger battery
2. Capacity sticker
3. Sticker to read and follow these instructions
4. Identification plate (ID plate)
5. Sign warning electrical device
6. Sign warning stay clear stop truck
7. Indicating sticker
8. Warning sticker
9. Crane hook label
10. LOGO

The truck is equipped with an emergency switch (5) which stops all lifting-, lowering-, driving- functions and engages the fail-safe electromagnetic brake when it is pushed. The function is described in chapter 2c. Follow the instructions given on the decals. Replace the decals if they are damaged or missing.

d. Technical data for US market

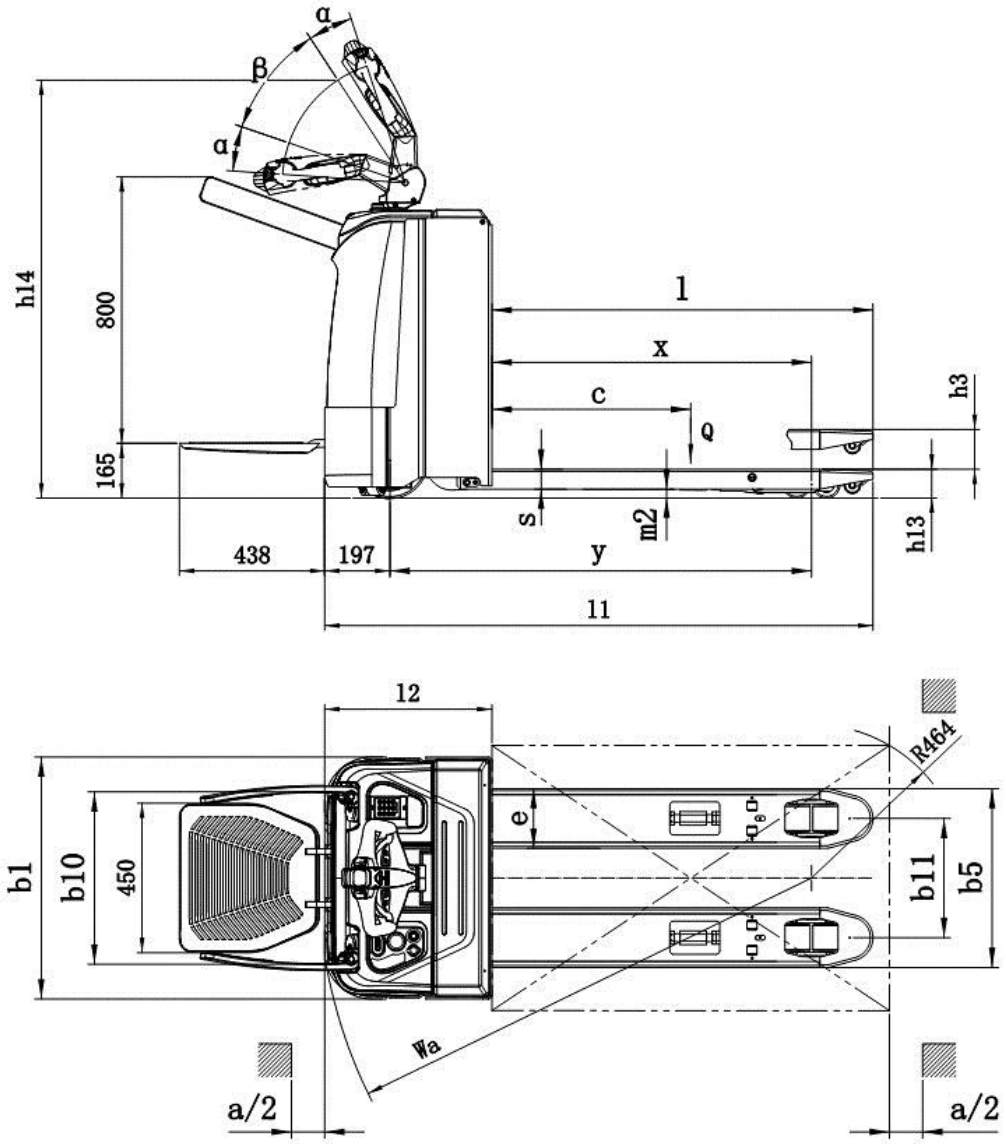

Fig. 20: Technical data (US market)

Table 13: Main technical data for standard version (US market)

Technical data in line with VDI 2198				
Identification	1.2	Model		PT45Li
	1.3	Drive		Electric
	1.4	Operation		Pedestrian/Stand
	1.5	Load capacity/rated load	Q(lbs)	4500
	1.6	Load centre distance	c(in)	23.6
	1.8	Load distance	x(in)	35.4[1)]
	1.9	Wheelbase	y(in)	47.5[1)]
Wei-ghts	2.1	Net weight with battery	lbs	*1114*
	2.2	Axle loading,laden front/rear	lbs	*1574/4040*
	2.3	Axle loading,unladen front/rear	lbs	*849/265*
Wheels/ frame	3.1	Tyres		PU
	3.2	Tyre size,front	∅ x w (in)	∅9×2.76
	3.3	Tyre size,rear	∅ x w (in)	∅3.23×3.23
	3.4	Additional wheels(dimensions)	∅ x w (in)	∅3.94×1.57
	3.5	Wheels,number front/rear(x=driven wheels)		1x+2/2 or 4
	3.6	Tread width,front	b_{10} (in)	20.5
	3.7	Tread,width,rear	b_{11} (in)	14.2
Basic dimensions	4.4	Lift	h_3 (in)	4.7
	4.9	Height of tiller	h_{14} (in)	42/49.6
	4.15	Height,lowered	h_{13} (in)	3.35
	4.19	Overall length	l_1 (in)	65
	4.20	Length to face of forks	l_2 (in)	19.9
	4.21	Overall width	b_1 (in)	28.7
	4.22	Fork dimensions	s/e/l	2.36/7.1/45.3
	4.25	Width across forks	b_5 (in)	21.3/27
	4.32	Ground clearance(centre of wheelbase)	m_2 (in)	0.98
	4.34	Aisle width for pallets 800×1200 lengthways	Ast(in)	82[1)]
	4.35	Turning radius	Wa (in)	56[1)]
Performance data	5.1	Travel speed laden/unladen	mph	*4.35/4.97*
	5.2	Lift speed,laden/unladen	mm/s	1.85/2.52
	5.3	Lowering speed,laden/unladen	mm/s	2.36/2.32
	5.8	Max. gradeability,laden/unladen	%	*8/15*
	5.10	Service brake		regenerative
Electrisc	6.1	Drive motor,output at S2 60min	Hp	1.88
	6.2	Lift motor,output at S3 10%	Hp	2.95
	6.3	Battery as per DIN 43531/35/36 A，B，C，no		no
	6.4	Battery voltage/nominal capacity	V/Ah	24/150
	6.5	Battery weight	lbs	*176*
	6.6	Energy consumption as per EN 16796	kWh /h	*0.188*
Misc.	8.1	Type of drive control		AC-speed control
	8.4	Sound pressure level at operator’s ear as per EN12053	dB(A)	*<70*
	8.6	Steering		Electric steering

1)、Elevated initial lift,lowered initial lift +2.6in.

13. DECLARATION OF CONFORMITY (valid, if sold within EU)

[GB] Original CE Declaration of conformity
The signatory hereby declares that the specified machine conforms to the EC Directive 2006/42/EC (Machine Directive), and 2014/30/EU (Electro-Magnetic Compatibility, EMC) including their amendments as translated into national legislation of the member countries. The signatory is individually authorized to compile the technical documents and declares that the following standards, including the normative procedures contained therein, have been applied:

[D] Original EG- Konformitätserklärung
Der Unterzeichner erklärt hiermit, dass die angegebene Maschine den EG-Richtlinien 2006/42/EG (Maschinenrichtlinie) und 2014/30/EU (Elektromagnetische Verträglichkeit, EMV) einschließlich ihrer Änderungen in der Umsetzung in die nationale Gesetzgebung der Mitgliedsländer entspricht. Der Unterzeichner ist zur Zusammenstellung der technischen Unterlagen einzeln befugt und erklärt, dass folgende Normen, einschließlich der darin enthaltenen normativen Verfahren, angewendet wurden:

[E] Original DECLARACIóN DE CONFORMIDAD CE
El signatario declara por la presente que la máquina especificada cumple con la Directiva CE 2006/42/EC (Directiva de Máquinas) y 2014/30/EU (Compatibilidad Electromagnética, EMC) incluidas sus enmiendas traducidas a la legislación nacional de los países miembros. El firmante está autorizado individualmente para compilar los documentos técnicos y declara que se han aplicado los siguientes estándares, incluidos los procedimientos normativos contenidos en ellos:

[F] Originale DECLARATION DE CONFORMITE CE
Le signataire déclare par la présente que la machine spécifiée est conforme à la directive CE 2006/42/CE (directive machine) et 2014/30/UE (compatibilité électromagnétique, CEM), y compris leurs modifications telles que traduites dans la législation nationale des pays membres. Le signataire est individuellement autorisé à compiler les documents techniques et déclare que les normes suivantes, y compris les procédures normatives qu'elles contiennent, ont été appliquées:

[NL] Origineel EG-CONFORMITEITSVERKLARING
De ondertekenaar verklaart hierbij dat de gespecificeerde machine voldoet aan de EG-richtlijnen 2006/42/EG (machinerichtlijn) en 2014/30/EU (elektromagnetische compatibiliteit, EMC) inclusief hun amendementen zoals vertaald in de nationale wetgeving van de aangesloten landen. De ondertekenaar is individueel gemachtigd om de technische documenten samen te stellen en verklaart dat de volgende normen, inclusief de normatieve procedures die daarin zijn opgenomen, zijn toegepast:

[P] Original DECLARAÇÃO DE CONFORMIDADE CE
O signatário declara que a máquina especificada está em conformidade com a Diretiva EC 2006/42/EC (Diretiva de Máquinas) e 2014/30/EU (Compatibilidade Eletromagnética, EMC), incluindo suas emendas traduzidas para a legislação nacional dos países membros. O signatário está individualmente autorizado a compilar os documentos técnicos e declara que as seguintes normas, incluindo os procedimentos normativos neles contidos, foram aplicadas:

[I] Originale DICHIARAZIONE DI CONFORMITÀ CE
Il firmatario dichiara che la macchina specificata è conforme alla Direttiva CE 2006/42/CE (Direttiva macchine) e 2014/30/UE (Compatibilità elettromagnetica, EMC) compresi i relativi emendamenti tradotti nella legislazione nazionale dei paesi membri. Il firmatario è autorizzato individualmente alla compilazione dei documenti tecnici e dichiara che sono state applicate le seguenti norme, comprese le procedure normative ivi contenute:

[BG] Оригинален ЕВРОПЕЙСКА ОБЩНОСТ - ДЕКЛАРАЦИЯ ЗА СЪОТВЕТСТВИЕ
С настоящото подписалото лице декларира, че посочената машина отговаря на Директива на ЕО 2006/42/ЕС (Директива за машини) и 2014/30/EU (Електромагнитна съвместимост, ЕМС), включително техните изменения, преведени в националното законодателство на страните-членки. Подписалото лице е лично упълномощено да съставя техническите документи и декларира, че са приложени следните стандарти, включително съдържащите се в тях нормативни процедури:

[CZ] Originál EG - PROHLÁŠENÍ OSHODĚ
Signatář tímto prohlašuje, že uvedený stroj je ve shodě se směrnicí ES 2006/42/ES (Směrnice o strojích) a 2014/30/EU (Elektromagnetická kompatibilita, EMC) včetně jejich změn ve znění přeložené do národní legislativy členských zemí. Podepisující osoba je samostatně oprávněna sestavit technické dokumenty a prohlašuje, že byly použity následující normy, včetně normativních postupů v nich obsažených:

[DK] Original EF-OVERENSSTEMMELSESERKLÆRING
Underskriveren erklærer hermed, at den specificerede maskine er i overensstemmelse med EF-direktivet 2006/42/EC (maskindirektivet) og 2014/30/EU (elektro-magnetisk kompatibilitet, EMC) inklusive deres ændringer som oversat til national lovgivning i medlemslandene. Underskriveren er individuelt bemyndiget til at udarbejde de tekniske dokumenter og erklærer, at følgende standarder, inklusive de normative procedurer indeholdt deri, er blevet anvendt:

[EST] Originaal EL vastavusavaldus
Allakirjutanu kinnitab käesolevaga, et nimetatud masin vastab EÜ direktiivile 2006/42/EÜ (masinadirektiiv) ja 2014/30/EL (elektromagnetiline ühilduvus, EMC), sealhulgas nende muudatustele, nagu on tõlgitud liikmesriikide siseriiklikesse õigusaktidesse. Allakirjutanul on individuaalselt õigus koostada tehnilisi dokumente ja ta kinnitab, et on kohaldatud järgmisi standardeid, sealhulgas neis sisalduvaid normatiivprotseduure:

[FIN] Alkuperäinen EU-YHDENMUKAISUUSSELOSTUS
Allekirjoittaja vakuuttaa täten, että määritetty kone on EY-direktiivin 2006/42/EY (konedirektiivi) ja 2014/30/EU (sähkömagneettinen yhteensopivuus, EMC) mukainen, mukaan lukien niiden muutokset, sellaisina kuin ne on käännetty jäsenmaiden kansalliseen lainsäädäntöön. Allekirjoittaja on henkilökohtaisesti valtuutettu kokoamaan tekniset asiakirjat ja vakuuttaa, että seuraavia standardeja, mukaan lukien niihin sisältyvät normatiiviset menettelyt, on sovellettu:

[GR] Πρωτότυπο ΔΗΛΩΣΗΣΥΜΜΟΡΦΩΣΗΣΕΟΚ
Ο υπογράφοντος δηλώνει με το παρόν ότι το συγκεκριμένο μηχάνημα συμμορφώνεται με την Οδηγία 2006/42/ΕΚ (Οδηγία Μηχανών) και 2014/30/ΕΕ (Ηλεκτρομαγνητική Συμβατότητα, ΕΜΣ) συμπεριλαμβανομένων των τροποποιήσεών τους όπως έχουν μεταφραστεί στην εθνική νομοθεσία των χωρών μελών. Ο υπογράφοντος είναι ατομικά εξουσιοδοτημένος να συντάξει τα τεχνικά έγγραφα και δηλώνει ότι έχουν εφαρμοστεί τα ακόλουθα πρότυπα, συμπεριλαμβανομένων των κανονιστικών διαδικασιών που περιέχονται σε αυτά:

[H] Eredeti EU KONFORMITÁSI NYILATKOZAT
Az aláíró ezennel kijelenti, hogy a megadott gép megfelel a 2006/42/EC (gépirányelv) és a 2014/30/EU (elektromágneses összeférhetőség, EMC) irányelveknek, beleértve azok módosításait a tagországok nemzeti jogszabályaiba lefordítva. Az aláíró egyénileg jogosult a műszaki dokumentumok összeállítására, és kijelenti, hogy a következő szabványokat, beleértve az abban foglalt normatív eljárásokat, alkalmazták:

[LT] Originalus ES atitikimo deklaracija

Pasirašęs asmuo pareiškia, kad nurodyta mašina atitinka EB direktyvą 2006/42/EB (mašinų direktyvą) ir 2014/30/ES (elektromagnetinį suderinamumą, EMC), įskaitant jų pakeitimus, išverstus į šalių narių nacionalinius teisės aktus. Pasirašęs asmuo yra individualiai įgaliotas rengti techninius dokumentus ir pareiškia, kad buvo taikomi šie standartai, įskaitant juose nurodytas normines procedūras:

[LV] Oriģināls ES atbilstības deklarācija

Parakstītājs ar šo apliecina, ka norādītā iekārta atbilst EK Direktīvai 2006/42/EK (Mašīnu direktīva) un 2014/30/ES (Elektromagnētiskā saderība, EMC), ieskaitot to grozījumus, kas ir tulkoti dalībvalstu nacionālajos tiesību aktos. Parakstītājs ir individuāli pilnvarots sastādīt tehniskos dokumentus un apliecina, ka ir piemēroti šādi standarti, tostarp tajos ietvertās normatīvās procedūras:

[N] Opprinnelig EU-KONFORMITETSERKLÆRING

Underskriveren erklærer herved at den spesifiserte maskinen er i samsvar med EC-direktivet 2006/42/EC (maskindirektivet), og 2014/30/EU (elektromagnetisk kompatibilitet, EMC) inkludert deres endringer som oversatt til nasjonal lovgivning i medlemslandene. Underskriveren er individuelt autorisert til å sammenstille de tekniske dokumentene og erklærer at følgende standarder, inkludert de normative prosedyrene som finnes deri, er brukt:

[PL] Oryginalny DEKLARACJA ZGODNOŚCI WE

Sygnatariusz niniejszym oświadcza, że określona maszyna jest zgodna z dyrektywą WE 2006/42/WE (dyrektywa maszynowa) i 2014/30/UE (kompatybilność elektromagnetyczna, EMC) wraz z ich poprawkami w tłumaczeniu na ustawodawstwo krajowe krajów członkowskich. Sygnatariusz jest indywidualnie upoważniony do sporządzania dokumentacji technicznej i oświadcza, że zastosowano następujące normy, w tym zawarte w nich procedury normatywne:

[RO] Original DECLARAŢIE DE CONFORMITATE CE

Semnatarul declară prin prezenta că mașina specificată este conformă cu Directiva CE 2006/42/CE (Directiva Mașini) și 2014/30/UE (Compatibilitate electro-magnetică, EMC), inclusiv amendamentele acestora, astfel cum au fost traduse în legislația națională a țărilor membre. Semnatarul este autorizat individual să întocmească documentele tehnice și declară că au fost aplicate următoarele standarde, inclusiv procedurile normative cuprinse în acestea:

[RUS] Оригинал Декларация соответствия стандартам ЕС

Настоящим подписывающая сторона заявляет, что указанная машина соответствует Директиве ЕС 2006/42/ЕС (Директива по машинам) и 2014/30/ЕС (Электромагнитная совместимость, ЭМС), включая их поправки, переведенные в национальное законодательство стран-членов. Подписавшаяся сторона имеет индивидуальное право на составление технических документов и заявляет, что были применены следующие стандарты, включая содержащиеся в них нормативные процедуры:

[S] Original EG-KONFORMITETSFÖRKLARING

Undertecknaren intygar härmed att den specificerade maskinen överensstämmer med EG-direktivet 2006/42/EC (maskindirektivet) och 2014/30/EU (elektromagnetisk kompatibilitet, EMC) inklusive deras tillägg som översatts till nationell lagstiftning i medlemsländerna. Undertecknaren är individuellt behörig att sammanställa de tekniska dokumenten och förklarar att följande standarder, inklusive de normativa procedurerna som finns däri, har tillämpats:

[SK] Originál vyhlásenie o zhode

Signatár týmto vyhlasuje, že špecifikovaný stroj je v súlade so Smernicou ES 2006/42/EC (Smernica o strojoch) a 2014/30/EU (Elektromagnetická kompatibilita, EMC) vrátane ich dodatkov preložených do národnej legislatívy členských krajín. Signatár je individuálne oprávnený zostavovať technické dokumenty a vyhlasuje, že boli aplikované nasledujúce normy vrátane normatívnych postupov v nich obsiahnutých:

[SLO] Original EU IZJAVA O SKLADNOSTI

Podpisnik s tem izjavlja, da je navedeni stroj v skladu z Direktivo ES 2006/42/ES (Direktiva o strojih) in 2014/30/EU (Electro-Magnetic Compatibility, EMC), vključno z njunimi spremembami, kot so prevedene v nacionalno zakonodajo držav članic. Podpisnik je posamično pooblaščen za sestavo tehnične dokumentacije in izjavlja, da so bili uporabljeni naslednji standardi, vključno z normativnimi postopki, ki jih vsebuje:

[TR] Orijinal AB Uygunluk Açıklaması

İmza sahibi, belirtilen makinenin AB Direktifi 2006/42/EC (Makine Direktifi) ve 2014/30/EU (Elektro-Manyetik Uyumluluk, EMC) ve bunların üye ülkelerin ulusal mevzuatına tercüme edilen değişiklikleri ile uyumlu olduğunu beyan eder. İmza sahibi, teknik belgeleri derlemeye bireysel olarak yetkilidir ve burada yer alan normatif prosedürler dahil olmak üzere aşağıdaki standartların uygulandığını beyan eder:

<the applied standards have to be shown here>

(1) Type: **XX XX– Self-propelled industrial truck**

(2) Serial No: **XXXXXXXX**

(3) Year of constr.: **YYYY**

(4) Manufacturer: Noblelift Intelligent Equipment Co., Ltd.
528 Changzhou Road, Taihu Sub-district, Changxing, 313100, PR China

(5) Responsible for compiling the technical documentation: <Company name>,
<Company Address>

(6) Date: <Place>, **YYYY.MM.DD**

(7) Authorized signatory: <Position> **Mr. Sample**

If you can read this text, your declaration is not complete. In this case ask for a copy

(1) Type/ Typ/ Tipo/ Modello/ Tyyppi/ Tipo / ΤΥΠΟΣ/ Típus/ Tip/ Тип/ Tips/ Tipas/ Tüüp:
(2) Serial No./ Serien-Nr./ N°. de série/ Serienummer/ Nº de serie/ Numero di serie/ Serienr./ Sarjanro/ αυξάνωναριθμός/ Seriové číslo/ Szériaszám/ Nr.Seryjny/ Serijska številka/ Výrobné číslo/ Серийныйномер/ Seri No./ Seerianr./ Sērijas Nr./ Serijos numeris:
(3) Year of constr./ Baujahr/ Année de constr./ Bouwjaar/ Año de constr./ Anno di costruzione/ Produktionsår/ Byggeår/ Tillverkningsår/ Valmistusvuosi / Ano de fabrico / έτοςκατασκευής/ Rokvýroby/ Gyártásév/ Rokprodukcji / Letnik / Годизготовления / Üretimyılı / Väljalaskeaasta / Izgatavošanas gads / Gamybosmetai
(4) Manufacturer/ Hersteller/ Fabricante/ Fabricant/ Fabrikant/ Fabricante/ Produttore/ производител/ Výrobce/ Fabrikant/ Tootja/ Valmistaja/ Κατασκευαστής/ Gyártó/ Gamintojas/ Ražotājs/ Produsent/ Producent/ Producător/ Производитель/ Tillverkare/ Výrobca/ Proizvajalec/ Üretici firma
(5) Responsible for compiling the technical documentiton/ Verantwortlich für die Zusammenstellung der technischen Dokumentation/ Responsable de compilar la documentación técnica/ Responsable de la compilation de la documentation technique/ Verantwoordelijk voor het samenstellen van de technische documentatie/ Responsável pela compilação da documentação técnica/ Responsabile della compilazione della documentazione tecnica/ Отговаря за съставянето на техническата документация/ Zodpovídá za sestavení technické dokumentace/ Ansvarlig for udarbejdelse af den tekniske documentation/ Vastutab tehnilise dokumentatsiooni koostamise eest/ Vastaa teknisen dokumentaation laatimisesta/ Υπεύθυνος για τη σύνταξη της τεχνικής τεκμηρίωσης/ Felelős a műszaki dokumentáció összeállításáért/ Atsakingas už techninės dokumentacijos sudarymą/ Atbildīgs par tehniskās dokumentācijas sastādīšanu/ Ansvarlig for sammenstilling av teknisk dokumentasjon/ Odpowiedzialny za kompletowanie dokumentacji technicznej/ Responsabil cu intocmirea documentatiei tehnice/ Ответственный за составление технической документации/ Ansvarig för att sammanställa den tekniska dokumentationen/ Zodpovedá za zostavenie technickej dokumentácie/ Odgovoren za pripravo tehnične dokumentacije/ Teknik dokümantasyonun derlenmesinden sorumlu
(6) Date/ Datum/ Data/ Fecha/ datum/ Dato/ päiväys/ Kuupäev/ Datums/дата/ Dátum/ dátum/ tarih/ ημερομηνία
(7) Authorised signatory/ ImAuftrag/ pour ordre/ Incaricato/ Por orden de/ por procuração/ op last van/ påvegneaf/ påuppdrag/ Etteroppdrag/ psta./ Ülesandel / pavedus / v.i. / Попоручению / megbízásából /длъжностнолице / z pověření / z poverenia / po nalogu / napolecenie / din sarcina / adına / θαη' ελληνή