Print Number：　　Print Date：

NOBLELIFT

Scan QR Code for More

Electric Pallet Truck PT20N

PARTS MANUAL

506746020101

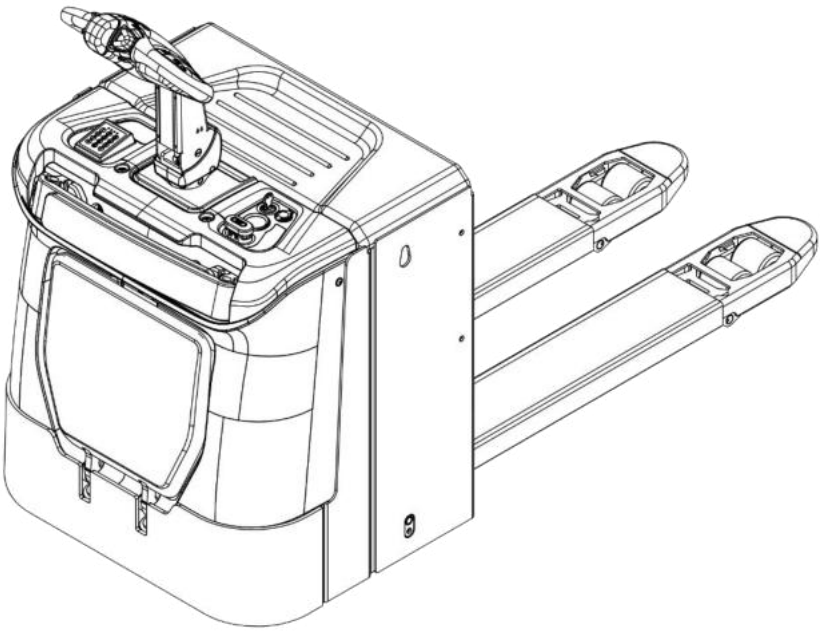

Version：V01

Truck Identification Number From：

Parts Manual:PT20N-PM01EN

Please order parts from authorized dealers of Noblelift Intelligent Equipment Co., LTD.

In order to avoid wrong delivery, all the orders for spare parts should specify the following items:

- Truck model, identification number and manufacture year.

- Orders for spare parts of mast, hydraulic transmission unit, steering axle, motor, etc. shall indicate the manufacture number of these parts.
- Codes for Noblelift spare parts are shown in the table of parts manual. Please also pay attention to the description of supply status, order quantity, etc. (check the number listed in "Mark" column of the parts manual).

"Mark" Column:

The unmarked indicates the parts are in short supply cycle.

Number 1: supply as package. Indicating these that parts are small parts and seal parts, which are supplied in package unit and in short supply cycle.

Number 2: supply with constraints. Indicating that these spare parts are not in stock and will be prepared for production after receiving the order from customers, which are in long supply cycle.

Number 3: phasing-out supply. Indicating that these parts will be replaced by new parts due to technical improvements and the current stock will not be available when these parts run out. Please check the description of technical improvements notice.

Number 4: supply as assembly. Indicating that these parts are assembly parts defined by manufacture process, which cannot be supplied as a single part.

Number 5: check other tables.

This parts manual is the property of Noblelift and can be shared under the confidential agreement only, Noblelift has the right to claim for compensation of any unauthorized use. Copy without permission is not allowed. Figures in the manual are not limited by the original design. Noblelift Intelligent Equipment Co., LTD reserves the right to improve the products for continuous technology progress.

Table of Contents

Chapter 1: Drive System 5
01 Drive Unit (Manual Steering) (506746013501) 5
02 Drive Assembly (Manual Steering) (506746013502) 7
03 Drive Unit (Electrical Steering) (506746013503) 9
04 Drive Assembly (Electrical Steering) (506746013504) 12
Chapter 2: Hydraulic System 14
01 Hydraulic Unit (506746024001) 14
02 Hydraulic Power Unit (506746024002) 16
Chapter 3: Truck Frame 19
01 Truck Body (506746021501) 19
01 Truck Body (506746021501) Continuation 21
02 Chassis (506746038501) 23
02 Chassis (506746038501) Continuation1 25
02 Chassis (506746038501) Continuation2 27
03 Chassis (Side Extraction) (506746038502) 29
03 Chassis (Side Extraction) (506746038502) Continuation1 31
03 Chassis (Side Extraction) (506746038502) Continuation2 33
04 Guard Arm (535946017501) 35
05 Platform (535946018001) 38
Chapter 4: Steering System, Braking System, Wheels 40
01 Tiller (535946011001) 40
02 Tiller (535946011002) 42
03 Load Wheel (Tandem) (505646017001) 44
04 Load Wheel (Single) (505646017002) 47
05 Caster (504446016501) 50
Chapter 5: Electrical Parts 52
01 Display Assembly (535946010001) 52
02 Wire Harness (Manual Steering) (506746033001) 55
03 Wire Harness (Electrical Steering) (506746033002) 57
04 Controller (Manual Steering) (506746033003) 59
05 Controller (Electrical Steering) (506746033004) 61
06 Charger (506746036501) 64
06 Charger (506746036501) Continuation 66
07 Battery (506746037001) 68
Chapter 6: Special Parts 70
01 Load Backrest (506746040501) 70
02 Load Backrest (Side Extraction) (506746040502) 72
Chapter 7: Others 74
01 Labels and Decals (EU) (506746047001) 74
Appendix 76
01 Electrical Circuit Diagram (Manual Steering) (506746045501) 76
02 Electrical Circuit Diagram (Electrical Steering) (506746044502) 77

03 Hydraulic Circuit Diagram (506746045504) 78
04 Consumable Parts List 79

Chapter 1: Drive System

01 Drive Unit (Manual Steering) (506746013501)

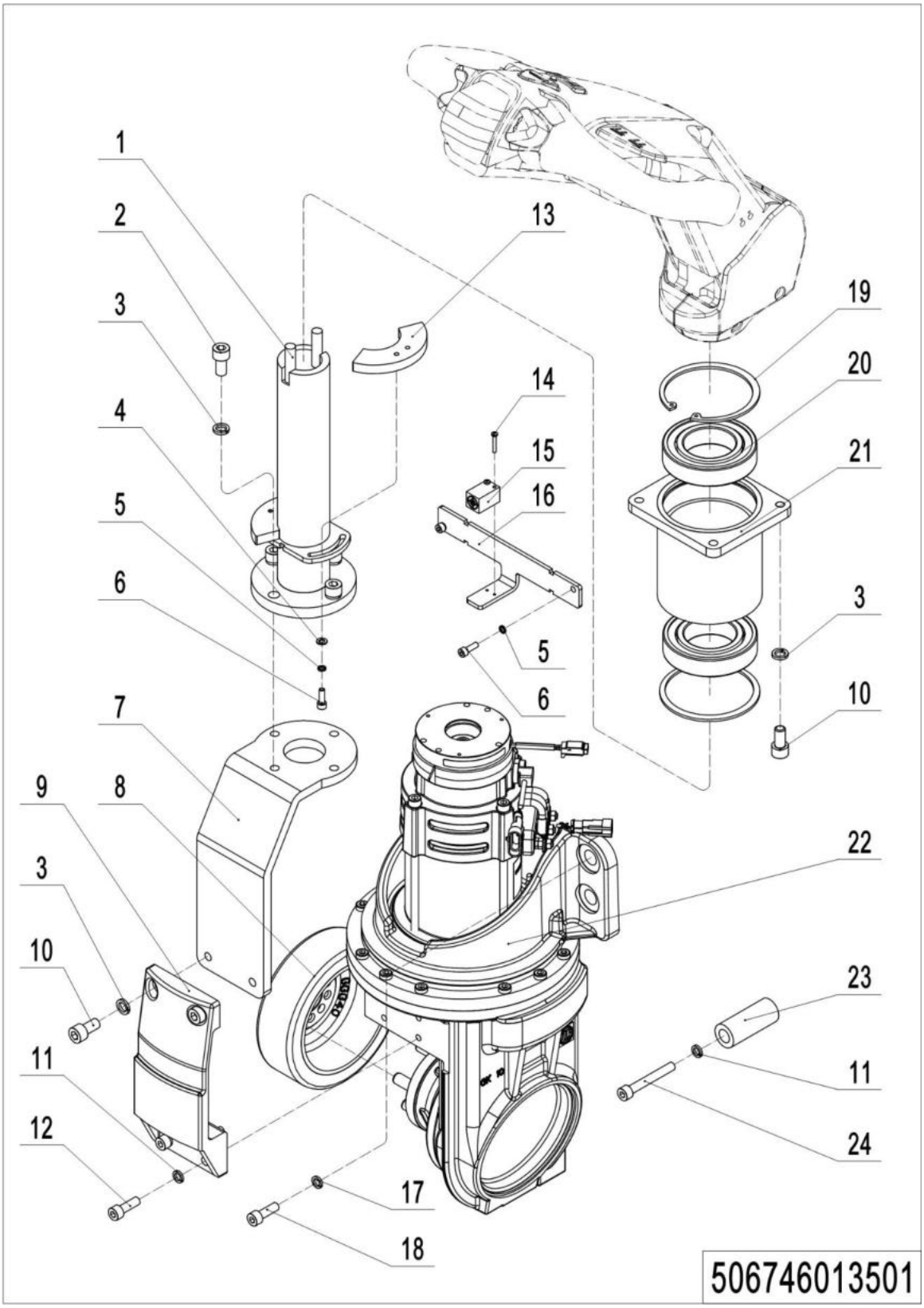

01 Drive Unit (Manual Steering) (506746013501)

No.	Item Code	Mark	Item Description	Qty.	Substitute	Note
1	506731210001	2	handle Spindle	1		
2	910200200076	1	Screw	4		
3	910400500007	1	Spring Washer	12		
4	910400100004	1	Flat Washer	4		
5	910400500004	1	Spring Washer	6		
6	910200200023	1	Screw	6		
7	506731220001	2	Plate	1		
8	940300400005		WheelΦ230x70	1		
9	535931220001	2	Bracket	1		
10	910200200075	1	Screw	8		
11	910400500006	1	Spring Washer	6		
12	910200200058	1	Screw	4		
13	506731220002	2	Stop Plate	2		
14	910200500015	1	Screw	2		
15	505633510000		Proximity Switch	1		
16	506731220003		Mounting Plate	1		
17	910400500010	1	Spring Washer	4		
18	910100300071	1	Bolt	4		
19	910401400024	1	Circlip	2		
20	910700200025		Bearing	2		
21	506731210002	2	Fixing Base	1		
22	----------		Drive Assembly	1		Check 506746013502
23	506731220004	2	Stopper base	2		
24	910200200065	1	Screw	2		

1= Supply as package. 2= Supply with constraints. 3= Phasing-out supply. 4= Supply as assembly. 5= Check other tables.

02 Drive Assembly (Manual Steering) (506746013502)

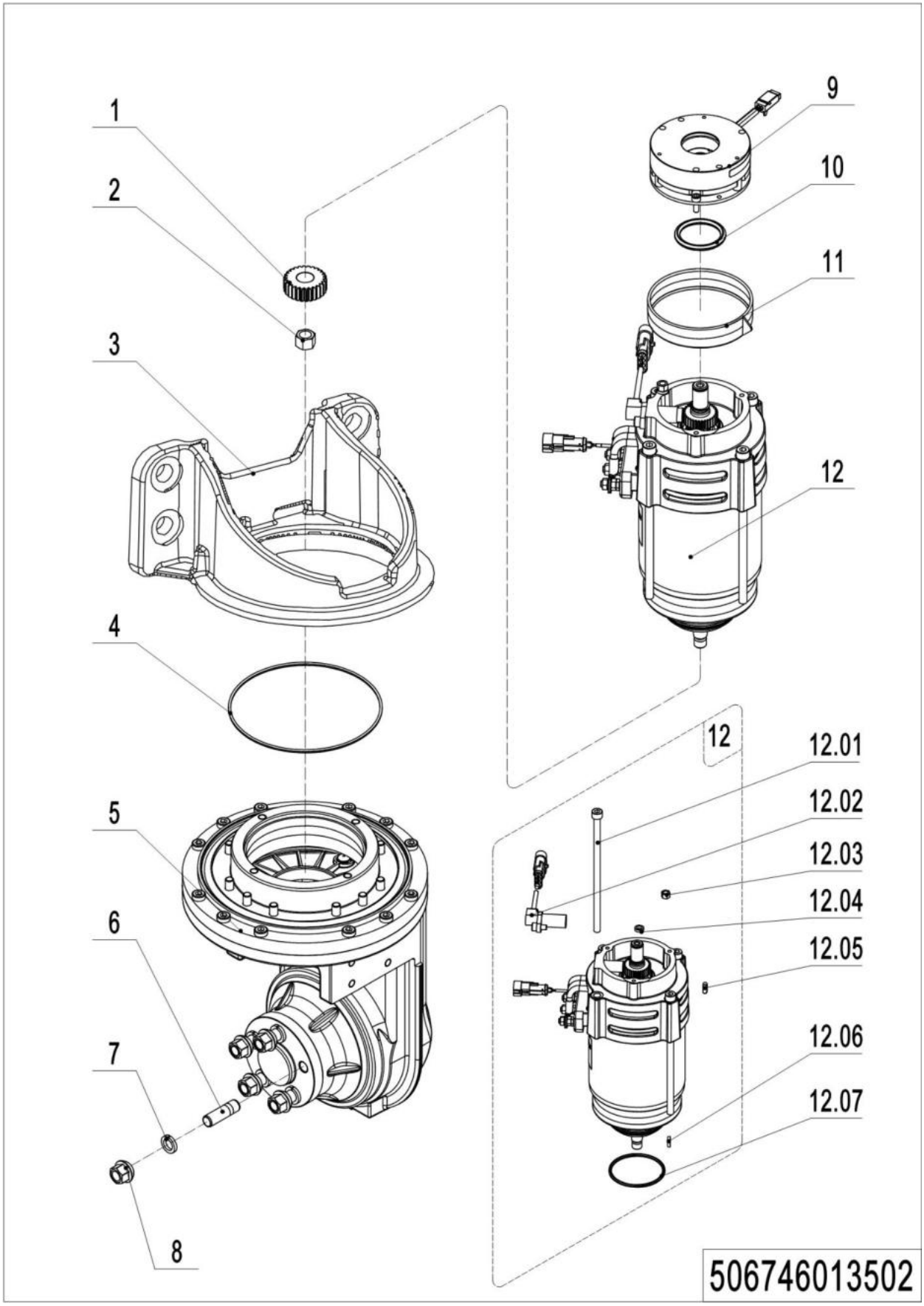

1= Supply as package. 2= Supply with constraints. 3= Phasing-out supply. 4= Supply as assembly. 5= Check other tables.

02 Drive Assembly (Manual Steering) (506746013502)

No.	Item Code	Mark	Item Description	Qty.	Substitute	Note
--	940900400005		Drive Unit	1		
1	535998520014	2	Gear	1		
2	535998520008	2	Nut	1		
3	506798510005	2	Mounting Base	1		
4	535998520009	2	O-Ring	1		
5	535998510005	2	Gearbox Assembly	1		
6	535998520011	2	Bolt	5		
7	535998520012	2	Washer	5		
8	535998520013	2	Nut	5		
9	535998510001	2	Brake	1		
10	535998520000	2	Locating Ring	1		
11	535998520001	2	Division Plate	1		
12	535998510003	2	Motor	1		
12.01	535998520002	2	Screw	1		
12.02	535998510002	2	Sensor	1		
12.03	535998520003	2	Nut	1		
12.04	535998520004	2	Safety Element	1		
12.05	535998520005	2	Feather Key	1		
12.06	535998520006	2	Key	1		
12.07	535998520007	2	O-Ring	1		

03 Drive Unit (Electrical Steering) (506746013503)

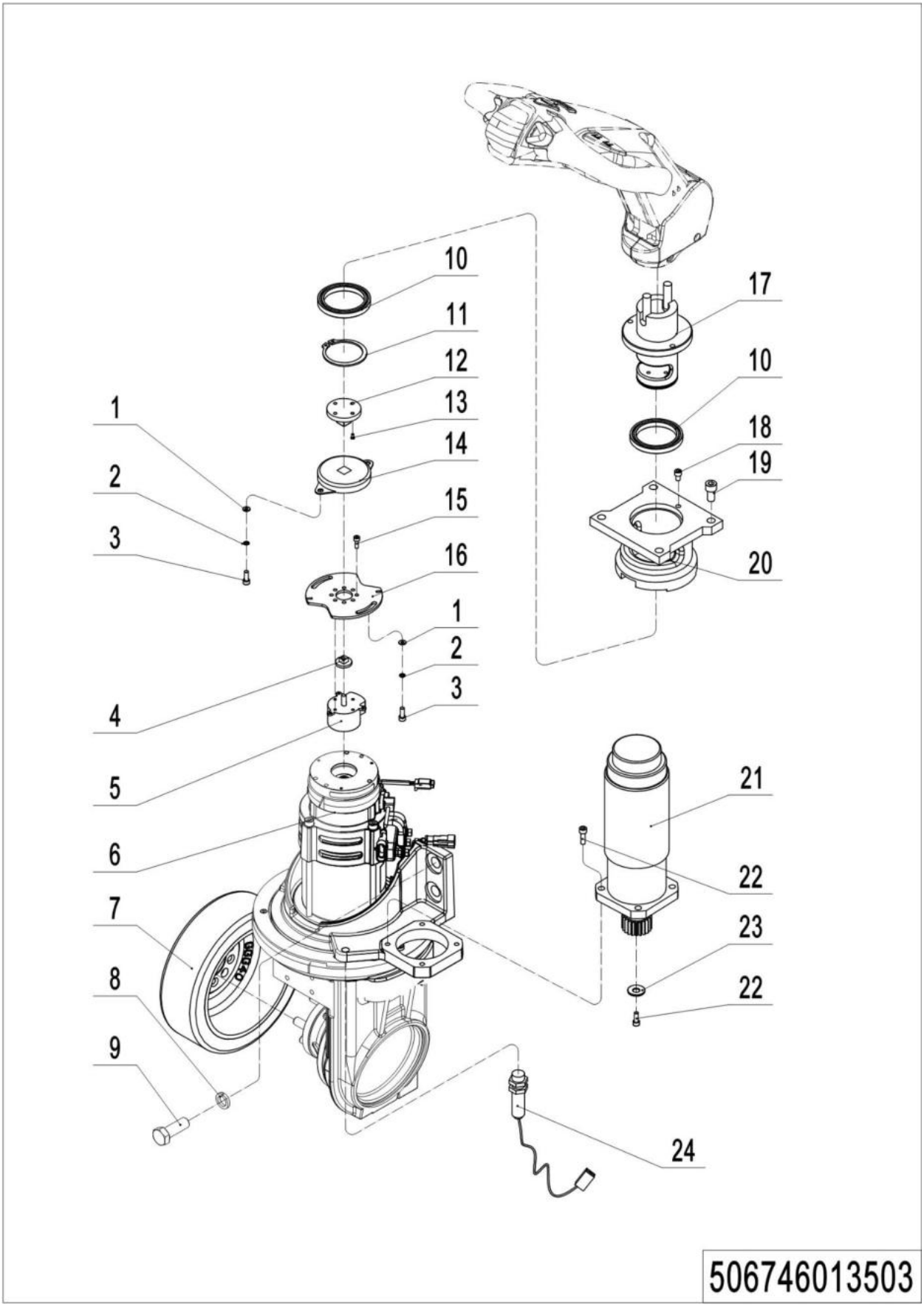

1= Supply as package. 2= Supply with constraints. 3= Phasing-out supply. 4= Supply as assembly. 5= Check other tables.

03 Drive Unit (Electrical Steering) (506746013503)

No.	Item Code	Mark	Item Description	Qty.	Substitute	Note
1	910400100004	1	Flat Washer	4		
2	910400500004	1	Spring Washer	4		
3	910200200021	1	Screw	4		
4	505931520002	2	Link Block	1		
5	921800200008		Potentiometer	1		
6	----------		Drive Assembly	1		Check 506746013504
7	940300400005	2	WheelΦ230x70	1		
8	910400500010	1	Spring Washer	4		
9	910100300071	1	Bolt	4		
10	910700200041		Bearing	2		
11	910401300024	1	Circlip	1		
12	505631520005	2	Link Block	1		
13	910200200013	1	Screw	1		
14	940801200001		Rotary Damper	1		
15	910200200014	1	Screw	4		
16	535931520002		Mounting Plate	1		
17	535931510001	2	Bracket	1		
18	910200200032	1	Screw	3		
19	910200200075	1	Screw	4		
20	505631520002		Fixing Base	1		
21	920900100069		Motor	1		
22	910200200057	1	Screw	5		
23	506713520001	1	Retaining Ring	1		
24	506733510006		Proximity Switch	1		

1= Supply as package. 2= Supply with constraints. 3= Phasing-out supply. 4= Supply as assembly. 5= Check other tables.

04 Drive Assembly (Electrical Steering) (506746013504)

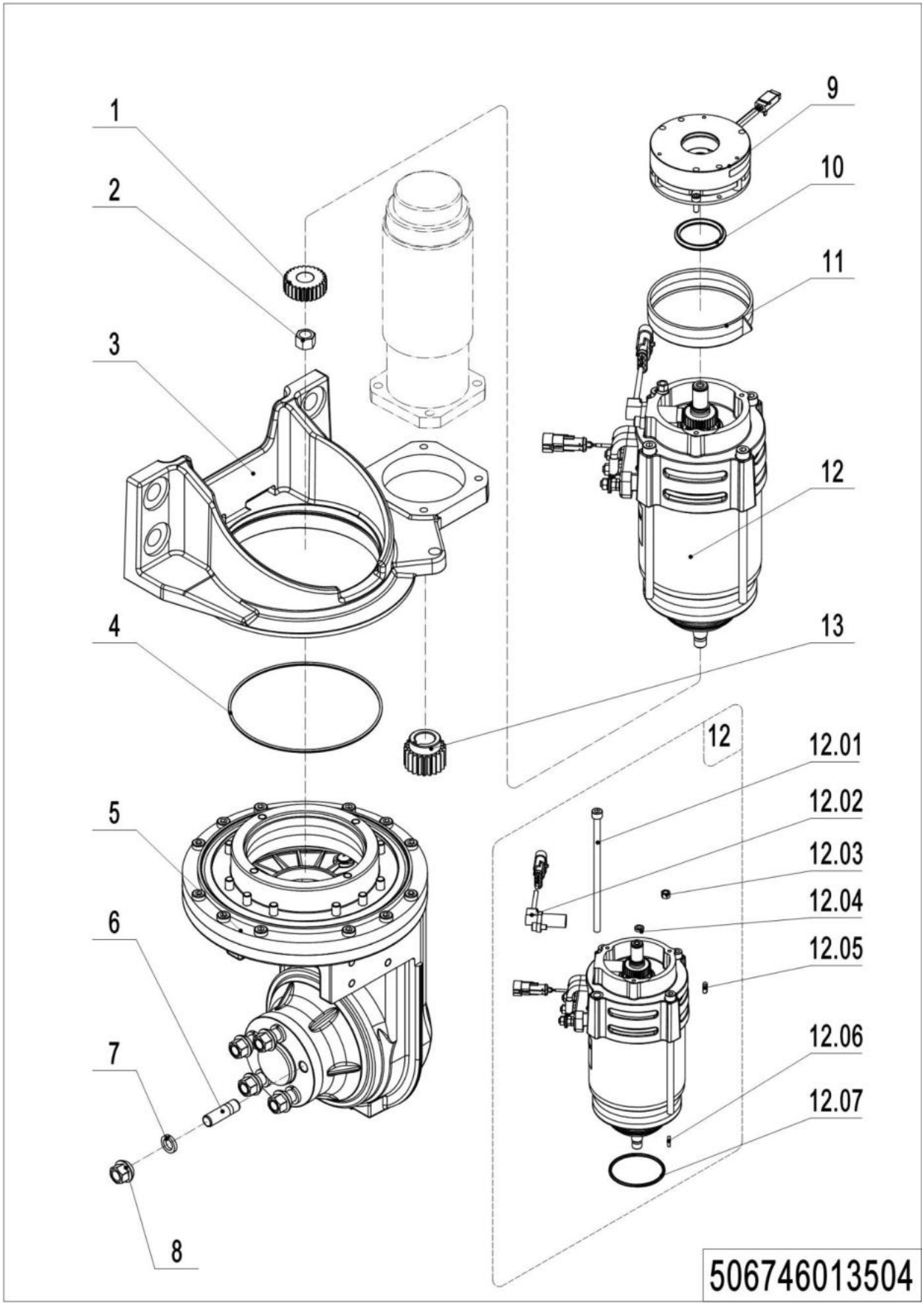

1= Supply as package. 2= Supply with constraints. 3= Phasing-out supply. 4= Supply as assembly. 5= Check other tables.

04 Drive Assembly (Electrical Steering) (506746013504)

No.	Item Code	Mark	Item Description	Qty.	Substitute	Note
--	940900500009		Steering Unit	1		
1	535998520014	2	Gear	1		
2	535998520008	2	Nut	1		
3	506798510006	2	Mounting Base	1		
4	535998520009	2	O-Ring	1		
5	535998510005	2	Gearbox Assembly	1		
6	535998520011	2	Bolt	5		
7	535998520012	2	Washer	5		
8	535998520013	2	Nut	5		
9	535998510001	2	Brake	1		
10	535998520000	2	Locating Ring	1		
11	535998520001	2	Division Plate	1		
12	535998510003	2	Motor	1		
12.01	535998520002	2	Screw	1		
12.02	535998510002	2	Sensor	1		
12.03	535998520003	2	Nut	1		
12.04	535998520004	2	Safety Element	1		
12.05	535998520005	2	Feather Key	1		
12.06	535998520006	2	Key	1		
12.07	535998520007	2	O-Ring	1		
13	535998520017	2	Gear	1		

Chapter 2: Hydraulic System

01 Hydraulic Unit (506746024001)

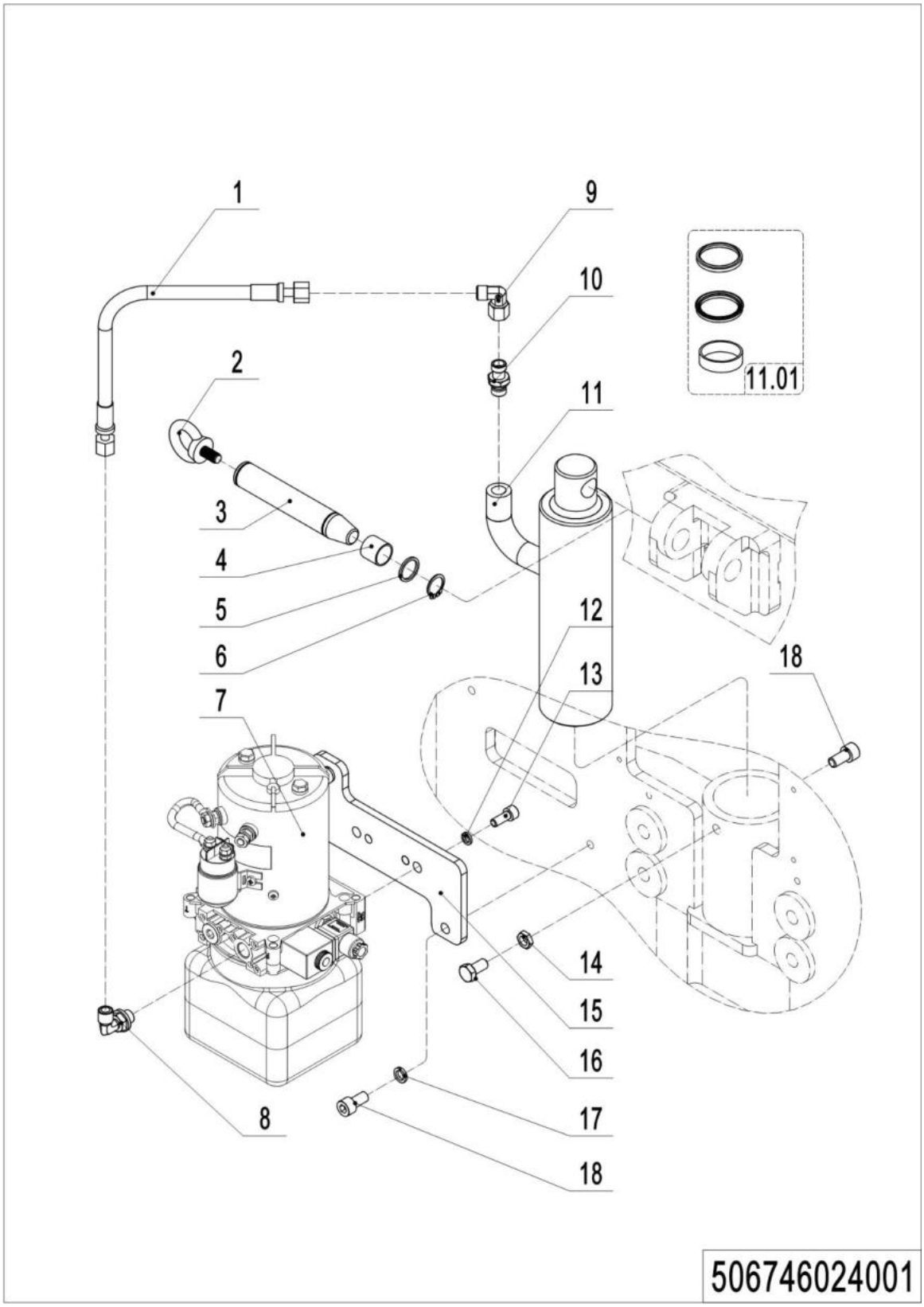

1= Supply as package. 2= Supply with constraints. 3= Phasing-out supply. 4= Supply as assembly. 5= Check other tables.

01 Hydraulic Unit (506746024001)

No.	Item Code	Mark	Item Description	Qty.	Substitute	Note
1	506724010002	2	Hose	1		
2	910201700001	1	Screw	1		
3	506738520134		Pin	1		
4	940500100019		Bushing	2		
5	940600500014	1	Washer	2		
6	910401300011	1	Circlip	2		
7	----------		Hydraulic Power Unit	1		Check 506746024002
8	950401100002		Joint	1		
9	950400200002		Joint	1		
10	950400400001		Joint	1		
11	504424010001	2	Cylinder	1		
11.01	504498510000	1	Seal Kit	1		
12	910400500006	1	Spring Washer	2		
13	910200200057	1	Screw	2		
14	910300300005	1	Nut	1		
15	506724020001		Mounting Plate	1		
16	910100300035	1	Bolt	1		
17	910400500007	1	Spring Washer	2		
18	910200200075	1	Screw	3		

02 Hydraulic Power Unit (506746024002)

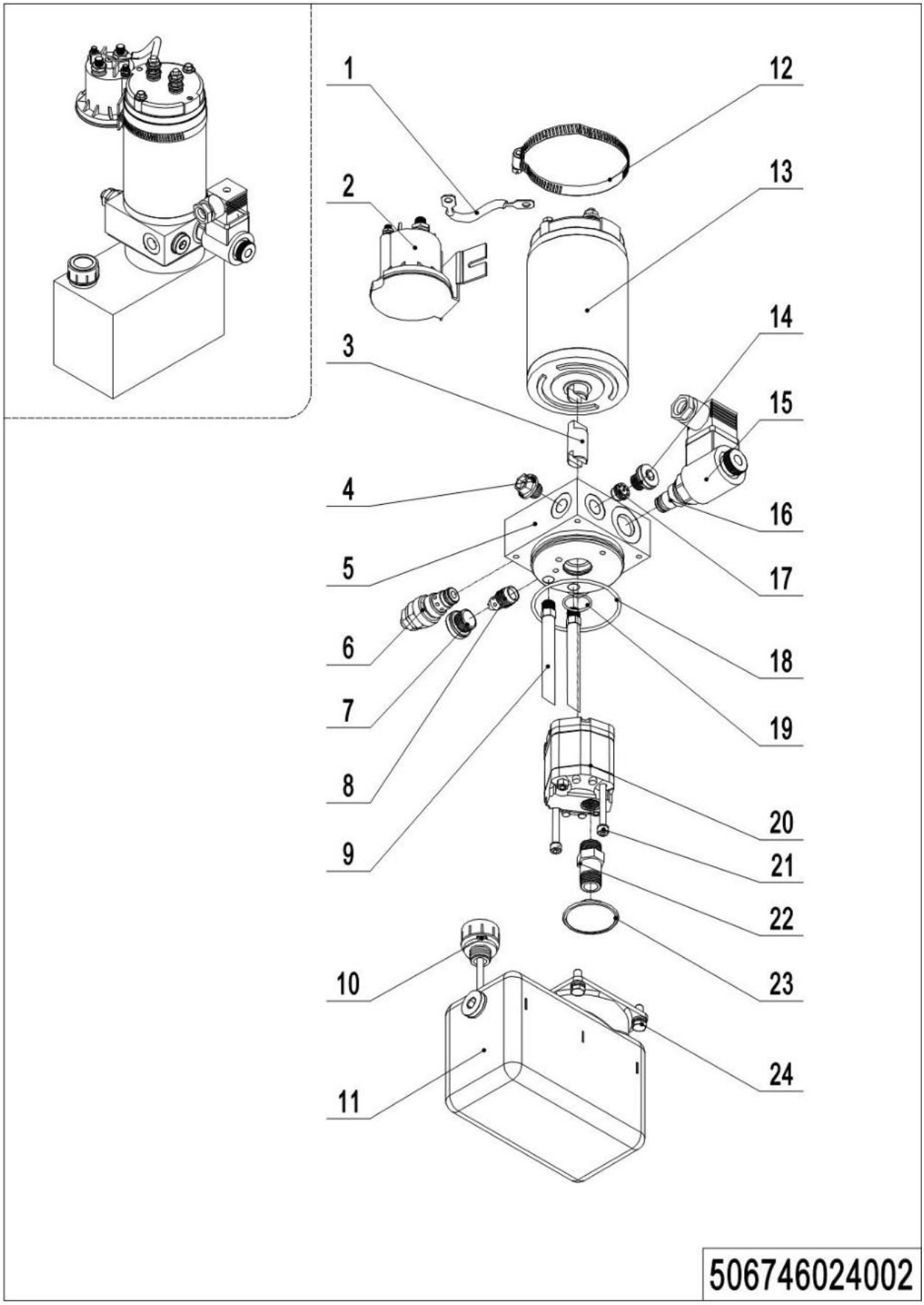

1= Supply as package. 2= Supply with constraints. 3= Phasing-out supply. 4= Supply as assembly. 5= Check other tables.

1= Supply as package. 2= Supply with constraints. 3= Phasing-out supply. 4= Supply as assembly. 5= Check other tables.

02 Hydraulic Power Unit (506746024002)

No.	Item Code	Mark	Item Description	Qty.	Substitute	Note
--	950900100036		Pump Unit	1		
1	504498520026	2	Cables	1		
2	504498510014	2	Switch	1		
3	506798510008	2	Coupling	1		
4	506798510009	2	End Cap	1		
5	506798510010	2	Valve Block	1		
6	506798510011	2	Overflow Valve	1		
7	506798510012	2	End Cap	1		
8	504498510016	2	Compensation Valve	1		
9	506798510013	2	Pipe	2		
10	504498520029	2	Cap-Tank	1		
11	506798510014	2	Tank	1		
12	506798510007	2	Hoop	1		
13	504498510007	2	Motor	1		
14	504498520019	2	End Cap	1		
15	506798510020	2	Coil	1		
16	506798510019	2	Magnetic Valve	1		
17	504498510012	2	Check Valve	1		
18	506798510018	2	O-Ring	1		
19	504498520021	2	O-Ring	1		
20	506798510017	2	Gear Pump	1		
21	506798510016	2	Screw	2		
22	506798510015	2	Oil Tube	1		
23	504498520025	2	Filter	1		
24	910100300004	2	Bolt	4		

1= Supply as package. 2= Supply with constraints. 3= Phasing-out supply. 4= Supply as assembly. 5= Check other tables.

Chapter 3: Truck Frame

01 Truck Body (506746021501)

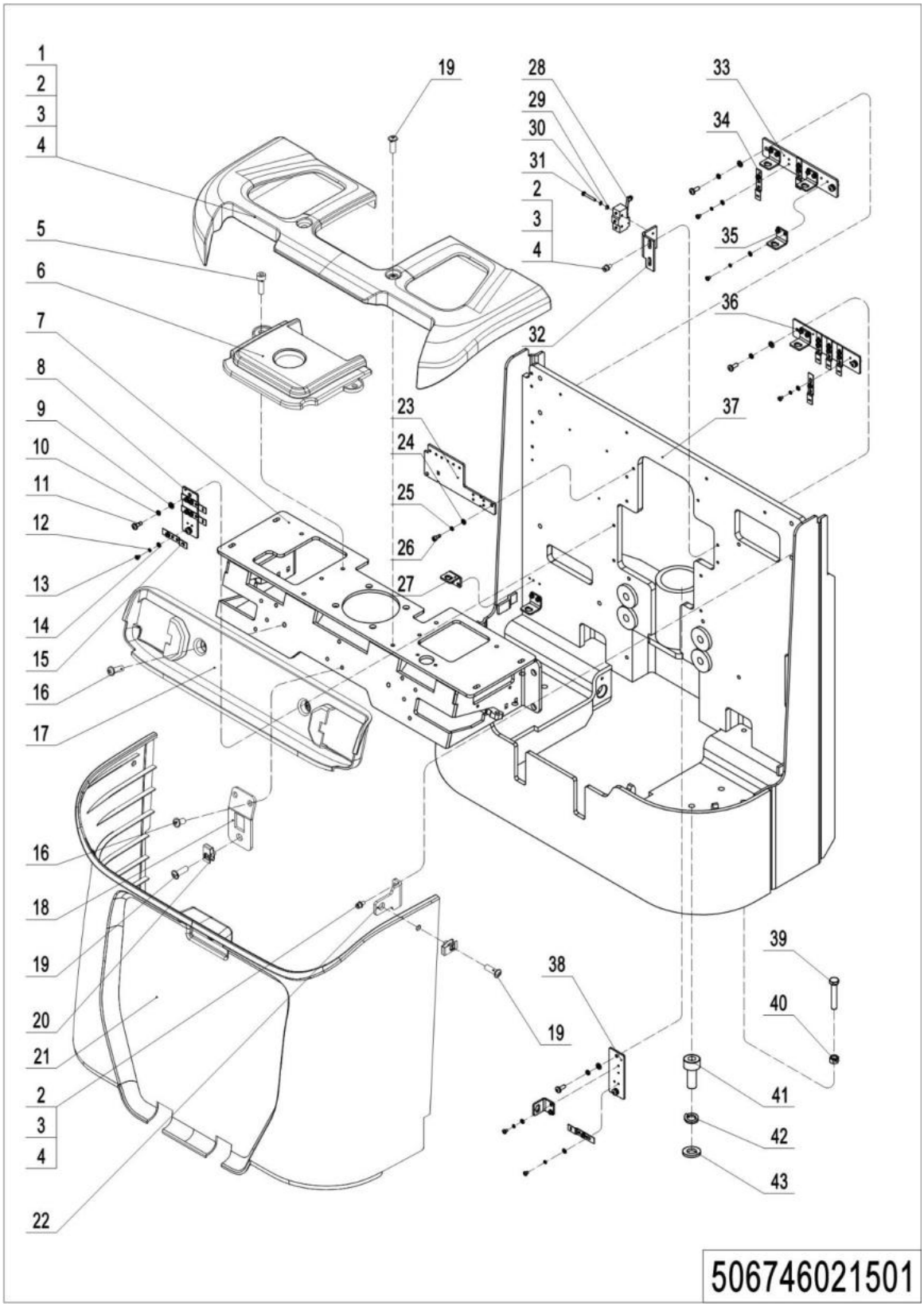

01 Truck Body (506746021501)

No.	Item Code	Mark	Item Description	Qty.	Substitute	Note
1	535921520040		Protective Cover	1		
2	910200200035	1	Screw	12		
3	910400100005	1	Flat Washer	12		
4	910400500005	1	Spring Washer	12		
5	910200200074	1	Screw	2		
6	535921520042		Protective Cover	1		
7	535917510000	2	Mounting Base	1		
8	506721520015		Mounting Plate	1		
9	910400100005	1	Flat Washer	8		
10	910400500005	1	Spring Washer	8		
11	910200500052	1	Screw	8		
12	910400500003	1	Spring Washer	30		
13	910200500020	1	Screw	30		
14	910400100003	1	Flat Washer	30		
15	921300300010		Connector Holder	3		
16	941100100005	1	Screw	4		
17	535921520041	2	Protective Cover	1		
18	535921520032	2	Mounting Plate	1		
19	941100100004	1	Screw	5		
20	940400400003	1	Cage Nut	3		
21	535921520039		Protective Cover	1		
22	535921520031		Mounting Plate	2		
23	506721520019		Fixing Plate	1		Electrical Steering
24	910400100004	1	Flat Washer	6		Electrical Steering
24	910400100004	1	Flat Washer	4		Manual Steering
25	910400500004	1	Spring Washer	6		Electrical Steering
25	910400500004	1	Spring Washer	4		Manual Steering
26	910200200022	1	Screw	6		Electrical Steering
26	910200200022	1	Screw	4		Manual Steering

01 Truck Body (506746021501) Continuation

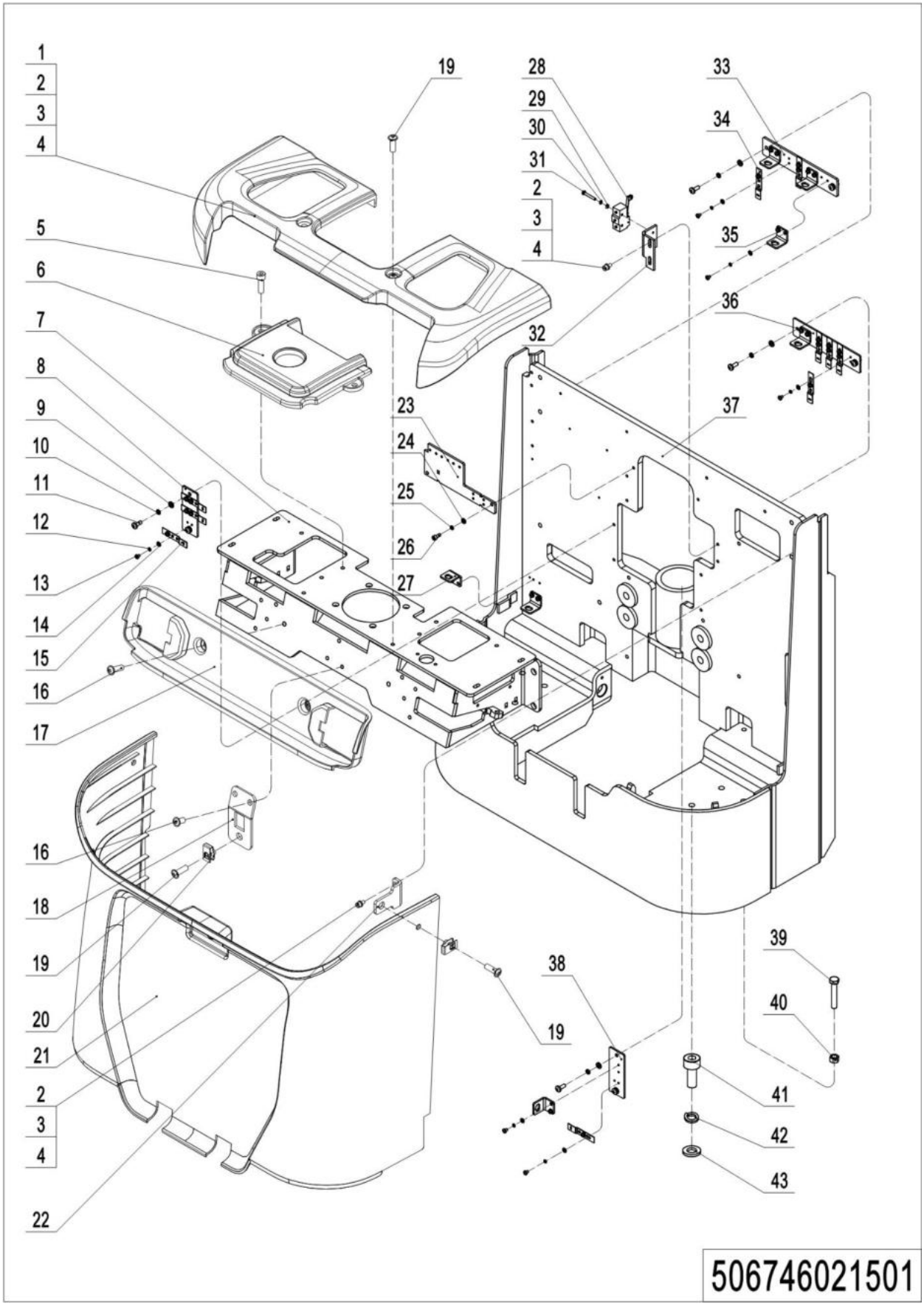

01 Truck Body (506746021501) Continuation

No.	Item Code	Mark	Item Description	Qty.	Substitute	Note
27	921300300003		Holder	1		
28	920200300003		Microswitch	1		
29	910400100003	1	Flat Washer	2		
30	910400500003	1	Spring Washer	2		
31	910200500028	1	Screw	2		
32	506721520014		Mounting Plate	1		
33	506721520017		Mounting Plate	1		
34	921300300005		Holder	2		
35	921300300003		Holder	4		
36	506721520016		Mounting Plate	1		
37	506721510000		Chassis	1		
38	506721520018		Mounting Plate	1		
39	910100300043	1	Bolt	2		
40	910300100007	1	Nut	2		
41	910200200078	1	Screw	8		
42	910400500007	1	Spring Washer	8		
43	910400100007	1	Flat Washer	8		

02 Chassis (506746038501)

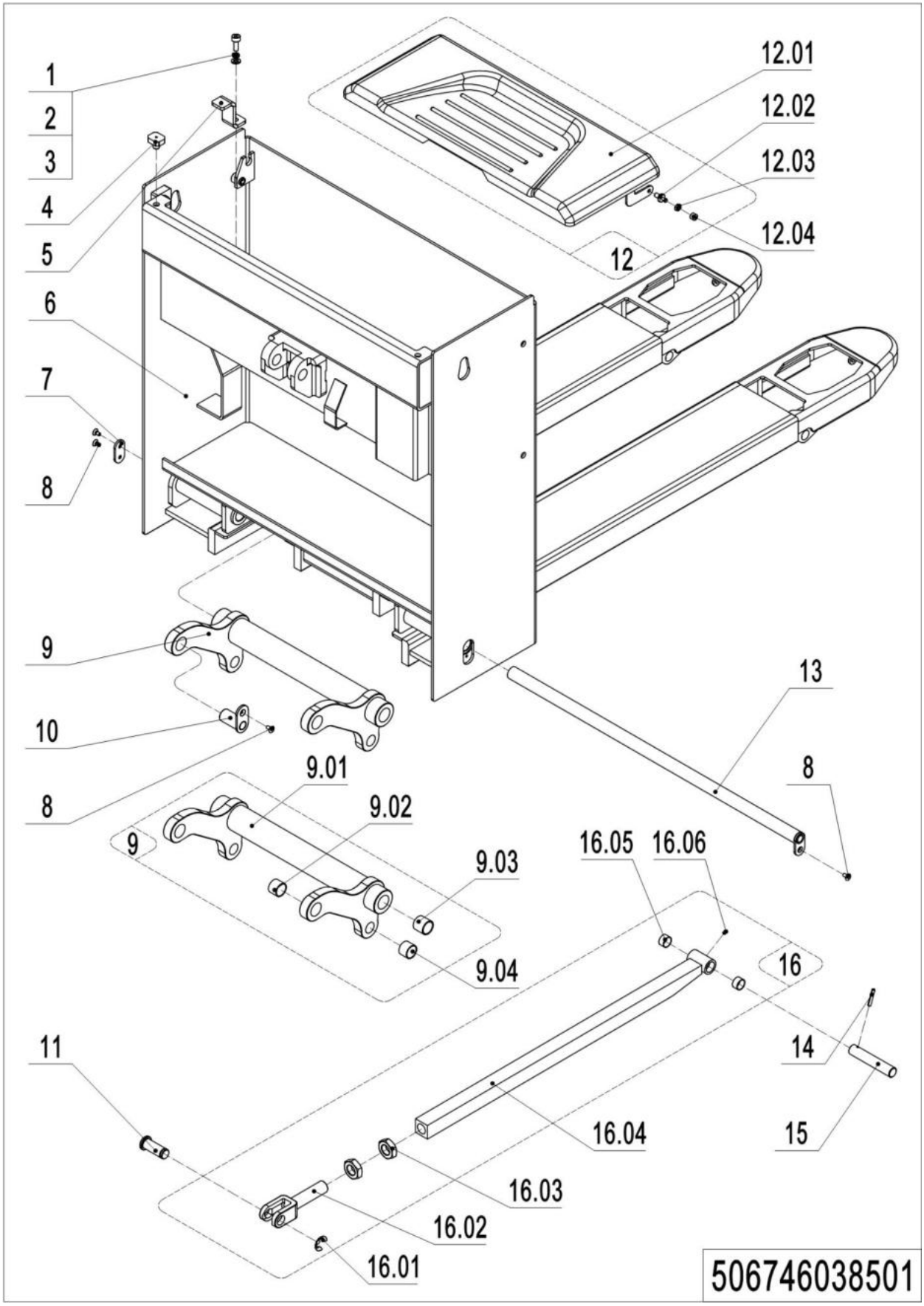

1= Supply as package. 2= Supply with constraints. 3= Phasing-out supply. 4= Supply as assembly. 5= Check other tables.

02 Chassis (506746038501)

No.	Item Code	Mark	Item Description	Qty.	Substitute	Note
1	910200200058	1	Screw	2		
2	910400500006	1	Spring Washer	2		
3	910400100006	1	Flat Washer	2		
4	505938520016		Crash Pad	2		
5	506738520048		Stop Plate	2		
6	506738510000	2	Chassis(EU540x1150)	1		
6	506738510022	2	Chassis(EU685x1150)	1		
6	506738510023	2	Chassis(EU540x1220)	1		
6	506738510008	2	Chassis(EU685x1220)	1		
6	506738510011	2	Chassis(EU540x1350)	1		
6	506738510013	2	Chassis(EU685x1350)	1		
6	506738510027	2	Chassis(EU540x1400)	1		
6	506738510029	2	Chassis(EU685x1400)	1		
6	506738510010	2	Chassis(EU540x1500)	1		
6	506738510014	2	Chassis(EU685x1500)	1		
6	506738510024	2	Chassis(EU540x1600)	1		
6	506738510026	2	Chassis(EU685x1600)	1		
6	506738510012	2	Chassis(EU540x1800)	1		
6	506738510015	2	Chassis(EU685x1800)	1		
6	506738510016	2	Chassis(EU540x2000)	1		
6	506738510018	2	Chassis(EU685x2000)	1		
6	506738510019	2	Chassis(EU540x2400)	1		
6	506738510021	2	Chassis(EU685x2400)	1		
7	505638520031		Fixing Plate	1		
8	910200400016	1	Screw	5		
9	506798510021		Rise Arm	1		
9	506798510022		Rise Arm	1		
9.01	505638510001		Rise Arm	1		
9.01	505638510007		Rise Arm	1		

02 Chassis (506746038501) Continuation1

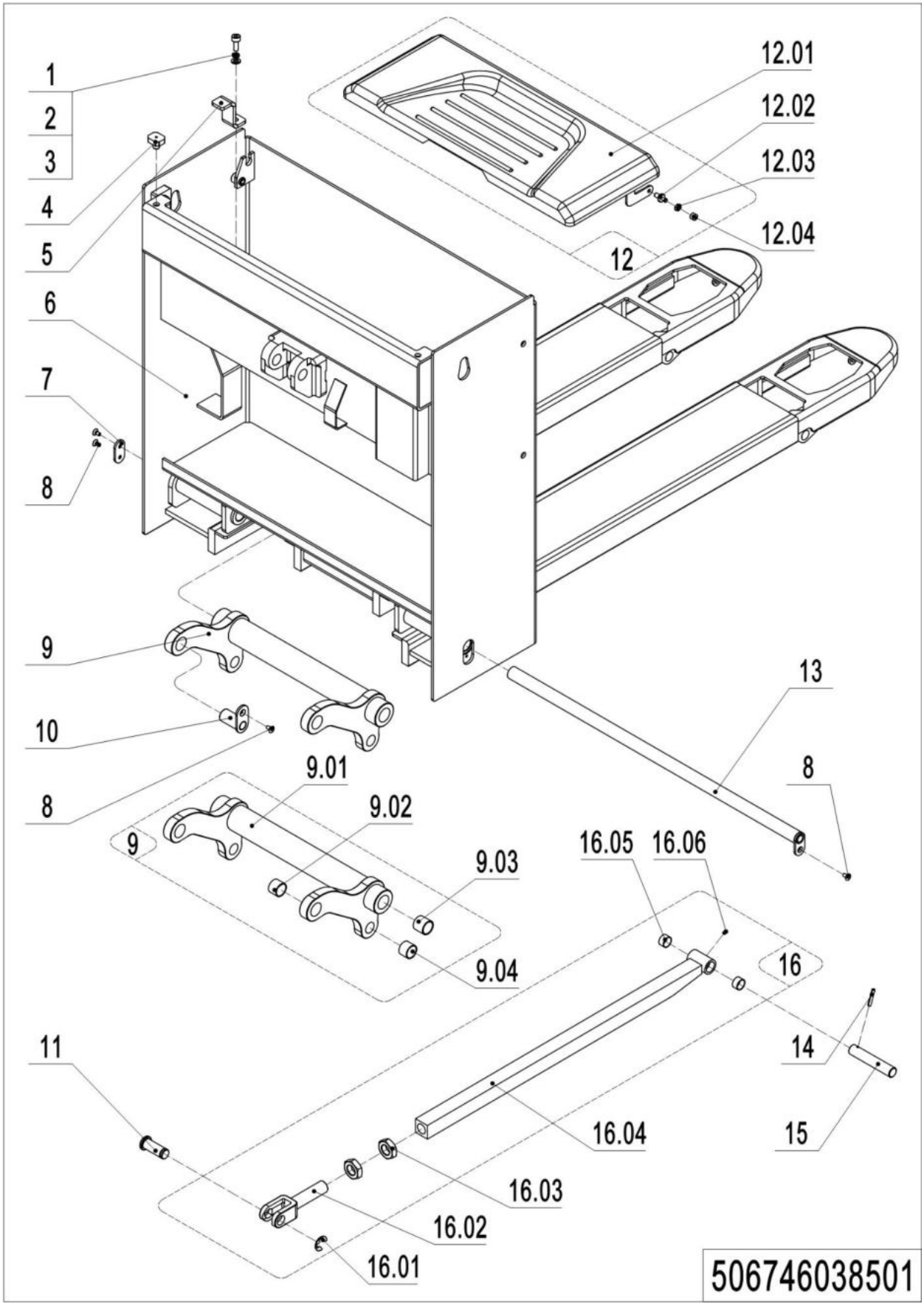

1= Supply as package. 2= Supply with constraints. 3= Phasing-out supply. 4= Supply as assembly. 5= Check other tables.

02 Chassis (506746038501) Continuation1

No.	Item Code	Mark	Item Description	Qty.	Substitute	Note
9.02	940500100027		Bushing	2		
9.03	940500100032		Bushing	2		
9.04	940500100019		Bushing	2		
10	505921510002		Pin	2		
11	505638520034		Pin	2		
12	506721001001		Cell Cover	1		
12.01	506721010000		Cell Cover	1		
12.02	505621020005		Axle	2		
12.03	910300300005	1	Nut	2		
12.04	505621020004		Crash Pad	2		
13	506738510006		Pin	1		
14	910600500004	1	Spring Pin	2		
15	505638520037		Axle	2		
16	506798510000		Push Rod Kit(1150)	2		
16	506798510001		Push Rod Kit(1220)	2		
16	506798510031		Push Rod Kit(1350)	2		
16	506798510032		Push Rod Kit(1400)	2		
16	506798510033		Push Rod Kit(1500)	2		
16	506798510034		Push Rod Kit(1600)	2		
16	506798510035		Push Rod Kit(1800)	2		
16	506798510036		Push Rod Kit(2000)	2		
16	506798510037		Push Rod Kit(2400)	2		
16.01	910401700005	1	Circlip	2		
16.02	505638520035		Push Rod Fork	2		
16.03	910300400010	1	Nut	4		
16.04	506738510001		Push Rod (1150)	2		
16.04	506738510009		Push Rod (1220)	2		
16.04	505638510046		Push Rod (1350, EU)	2		
16.04	505638510056		Push Rod (1400, EU)	2		

02 Chassis (506746038501) Continuation2

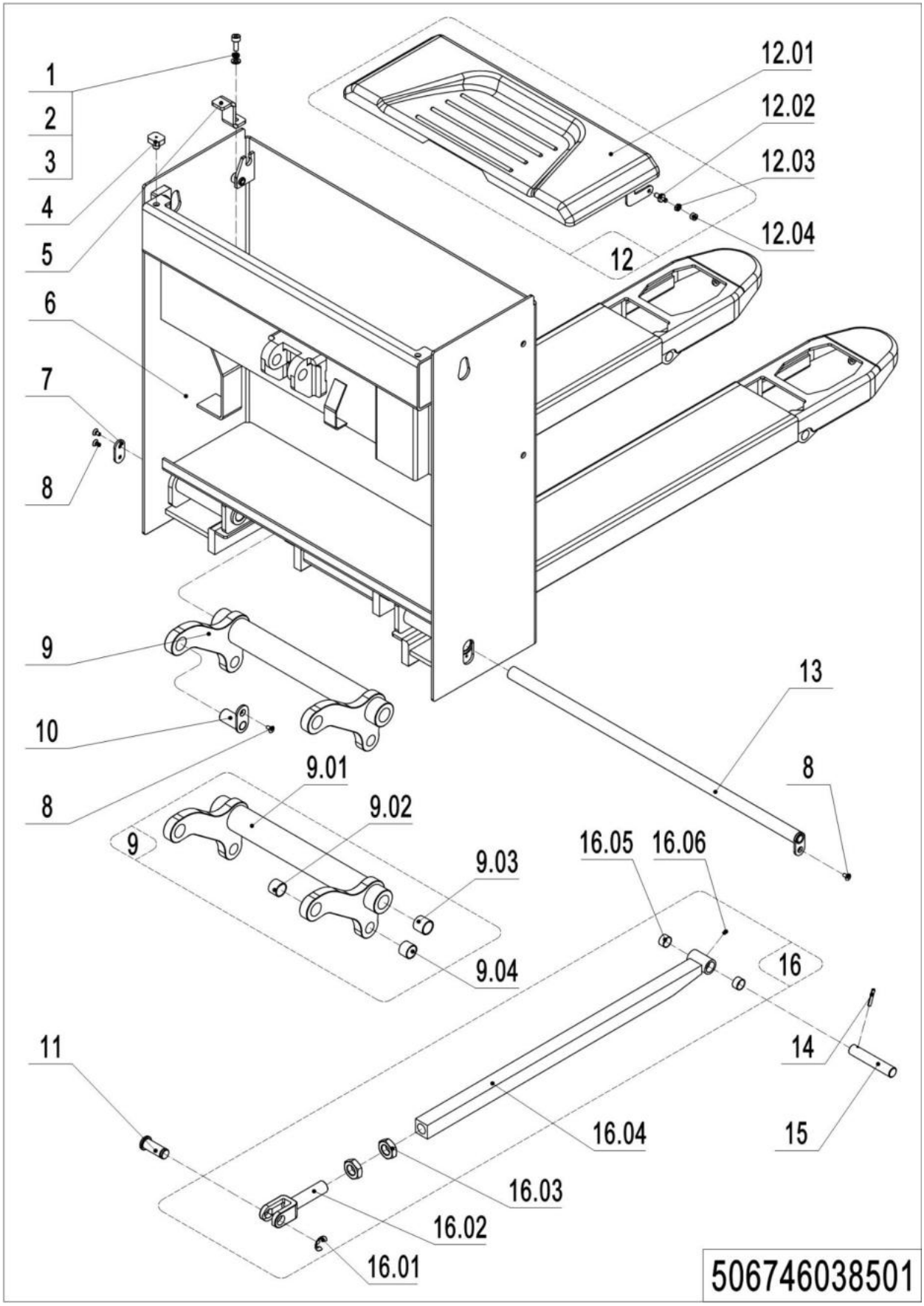

02 Chassis (506746038501) Continuation2

No.	Item Code	Mark	Item Description	Qty.	Substitute	Note
16.04	505638510018		Push Rod (1500, EU)	2		
16.04	506738510025		Push Rod (1600)	2		
16.04	505638510016		Push Rod (1800, EU)	2		
16.04	505638510014		Push Rod (2000, EU)	2		
16.04	505638510062		Push Rod (2400, EU)	2		
16.05	940500100012		Bushing	4		
16.06	911200100001	1	Oil Cup	1		

03 Chassis (Side Extraction) (506746038502)

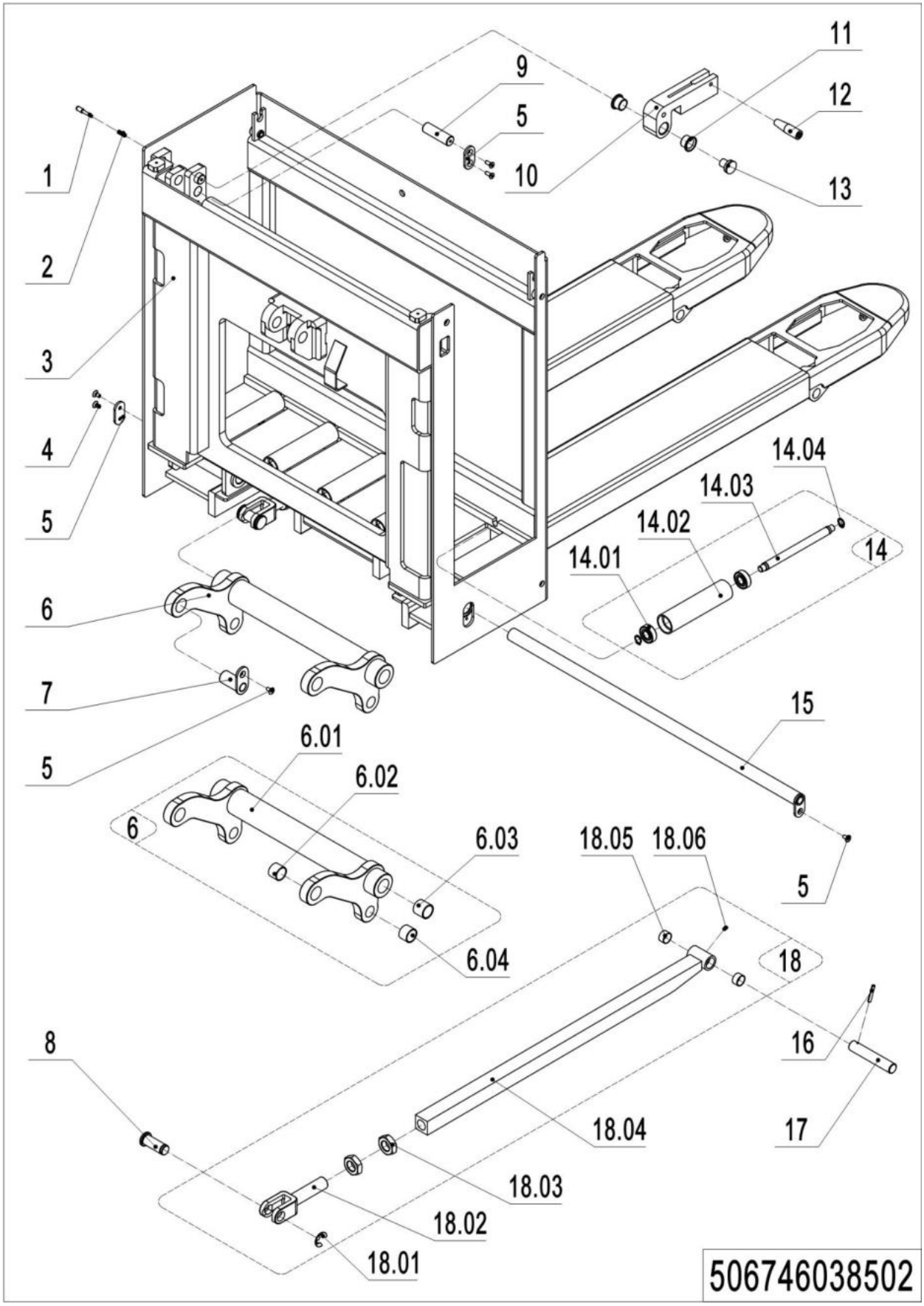

03 Chassis (Side Extraction) (506746038502)

No.	Item Code	Mark	Item Description	Qty.	Substitute	Note
1	505638520122	1	Screw	1		
2	940400500001	1	Spring	1		
3	506738510003	2	Chassis(EU540x1150)	1		
3	506738510030	2	Chassis(EU685x1150)	1		
3	506738510017	2	Chassis(EU540x1220)	1		
3	506738510007	2	Chassis(EU685x1220)	1		
3	506738510035	2	Chassis(EU540x1350)	1		
3	506738510036	2	Chassis(EU685x1350)	1		
3	506738510033	2	Chassis(EU540x1400)	1		
3	506738510031	2	Chassis(EU685x1400)	1		
3	506738510037	2	Chassis(EU540x1500)	1		
3	506738510039	2	Chassis(EU685x1500)	1		
3	506738510040	2	Chassis(EU540x1600)	1		
3	506738510042	2	Chassis(EU685x1600)	1		
3	506738510043	2	Chassis(EU540x1800)	1		
3	506738510045	2	Chassis(EU685x1800)	1		
3	506738510047	2	Chassis(EU540x2000/)	1		
3	506738510048	2	Chassis(EU685x2000)	1		
3	506738510050	2	Chassis(EU540x2400)	1		
3	506738510051	2	Chassis(EU685x2400)	1		
4	910200400016	1	Screw	5		
5	505638520031		Fixing Plate	2		
6	506798510021		Rise Arm	1		
6	506798510022		Rise Arm	1		
6.01	505638510001		Rise Arm	1		
6.01	505638510007		Rise Arm	1		
6.02	940500100027		Bushing	2		
6.03	940500100032		Bushing	2		
6.04	940500100019		Bushing	2		

03 Chassis (Side Extraction) (506746038502) Continuation1

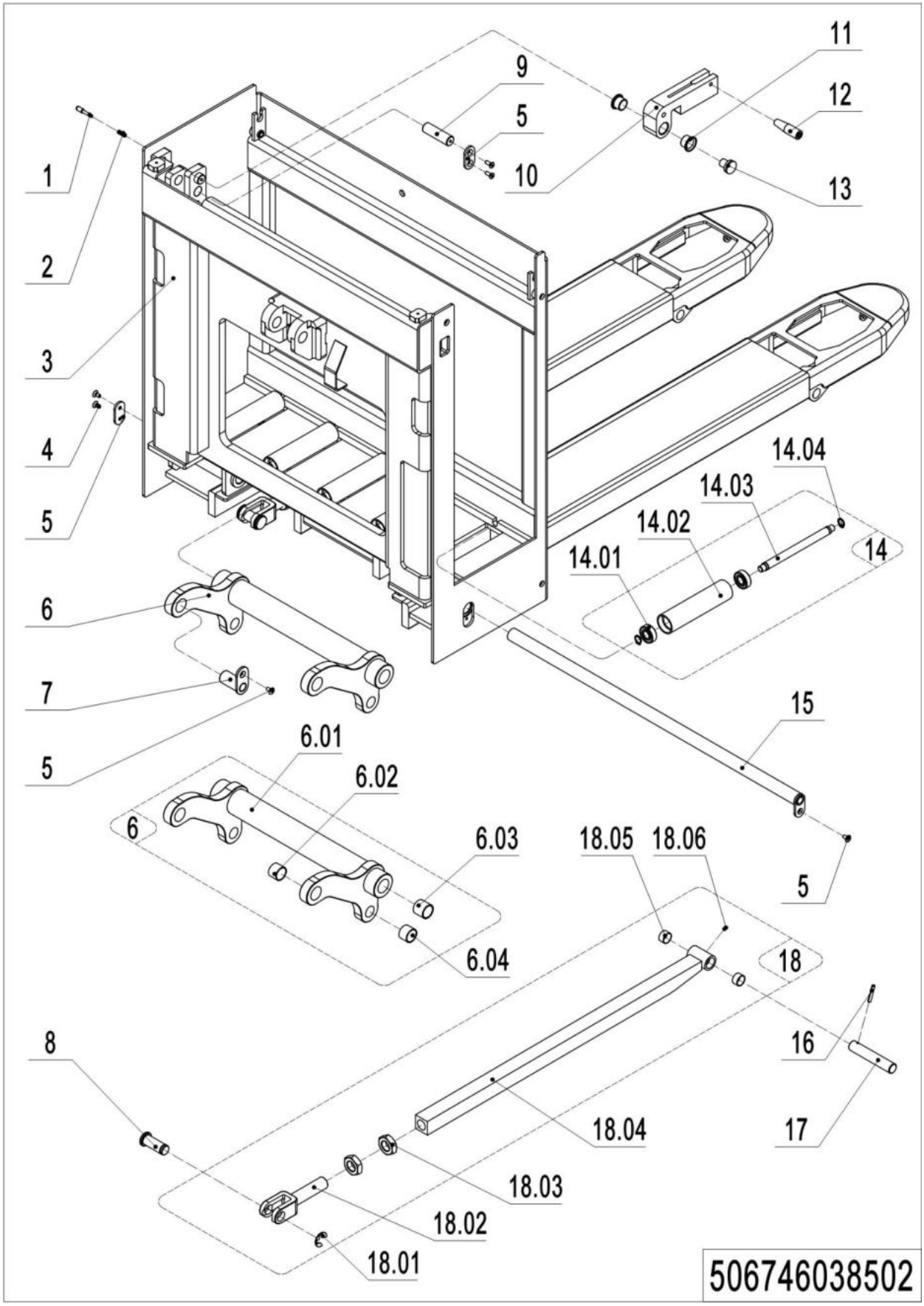

03 Chassis (Side Extraction) (506746038502) Continuation1

No.	Item Code	Mark	Item Description	Qty.	Substitute	Note
7	505921510002		Pin	2		
8	505638520034		Pin	2		
9	506938520000		Axle	1		
10	506738520040		Stop Block	1		
11	940500200008		Bushing	2		
12	911000400001		Tiller	1		
13	505638520123		Handle	1		
14	505938510003		Roller	6		
14.01	910700200017		Bearing	2		
14.02	505938520021		Roller	1		
14.03	505938520020		Axle	1		
14.04	910401300006	1	Circlip	2		
15	506738510006		Pin	1		
16	910600500004	1	Spring Pin	2		
17	505638520037		Axle	2		
18	506798510002		Push Rod Kit(1150)	2		
18	506798510003		Push Rod Kit(1220)	2		
18	506798510041		Push Rod Kit(1350)	2		
18	506798510042		Push Rod Kit(1400)	2		
18	506798510043		Push Rod Kit(1500)	2		
18	506798510044		Push Rod Kit(1600)	2		
18	506798510045		Push Rod Kit(1800)	2		
18	506798510046		Push Rod Kit(2000)	2		
18	506798510047		Push Rod Kit(2400)	2		
18.01	910401700005	1	Circlip	2		
18.02	505638520035		Push Rod Fork	2		
18.03	910300400010	1	Nut	4		
18.04	506738510005		Push Rod (1150)	2		
18.04	506938510002		Push Rod (1150)	2		

03 Chassis (Side Extraction) (506746038502) Continuation2

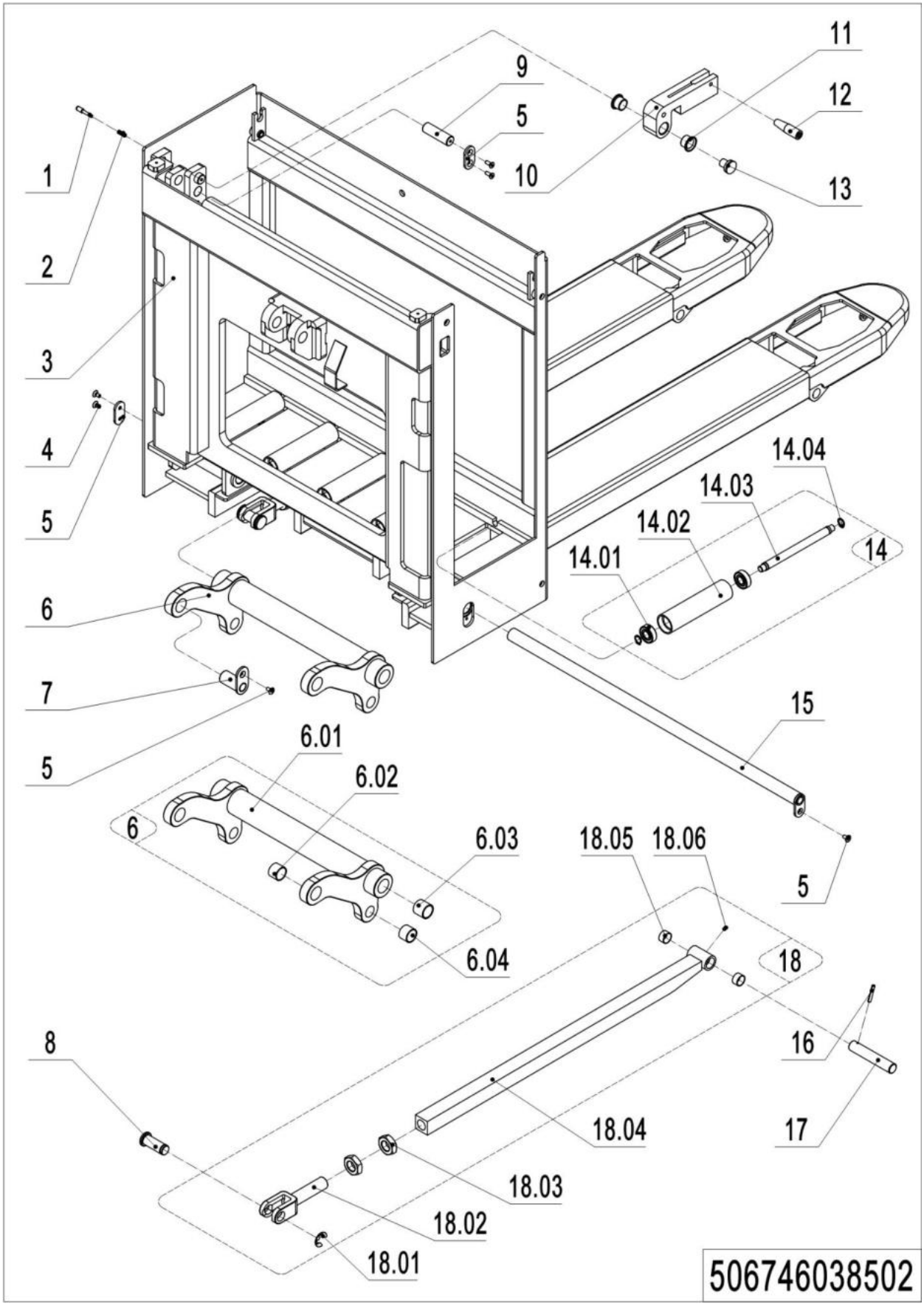

03 Chassis (Side Extraction) (506746038502) Continuation2

No.	Item Code	Mark	Item Description	Qty.	Substitute	Note
18.04	506738510034		Push Rod (1350, EU)	2		
18.04	506738510032		Push Rod (1400, EU)	2		
18.04	506738510038		Push Rod (1500, EU)	2		
18.04	506738510041		Push Rod (1600, EU)	2		
18.04	506738510044		Push Rod (1800, EU)	2		
18.04	506738510046		Push Rod (2000, EU)	2		
18.04	506738510049		Push Rod (2400, EU)	2		
18.05	940500100012		Bushing	4		
18.06	911200100001	1	Oil Cup	6		

04 Guard Arm (535946017501)

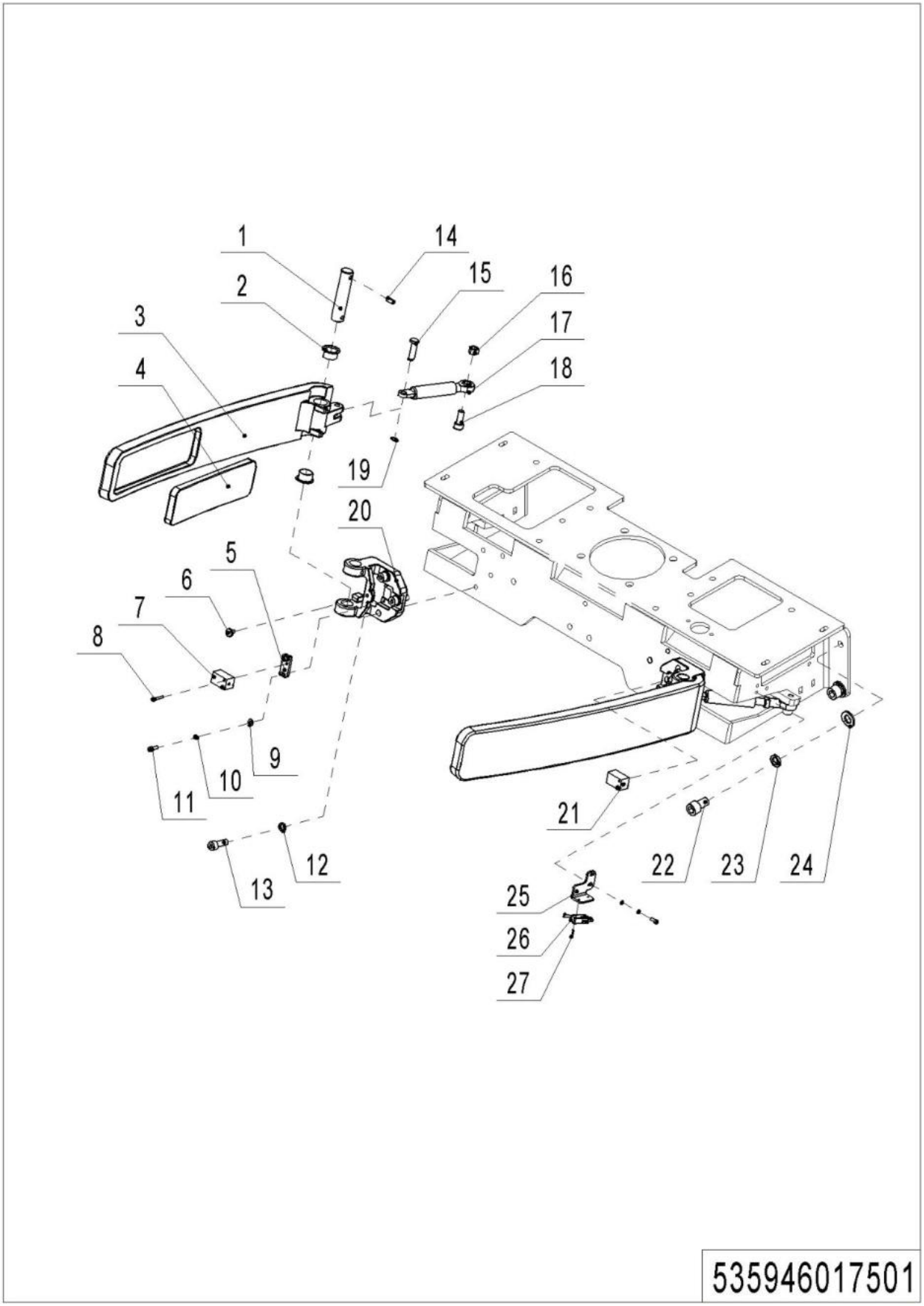

1= Supply as package. 2= Supply with constraints. 3= Phasing-out supply. 4= Supply as assembly. 5= Check other tables.

04 Guard Arm (535946017501)

No.	Item Code	Mark	Item Description	Qty.	Substitute	Note
1	535917520007		Axle	2		
2	940500200003		Bushing	2		
3	535917520008		Protective Arm	2		
4	535917520009		Protective Mat	2		
5	535917520011		Mounting Plate	2		
6	535917520012		Protective Mat	2		
7	535933510001		Proximity Switch	1		
8	910200500015	1	Screw	4		
9	910400100003	1	Flat Washer	8		
10	910400500003	1	Spring Washer	8		
11	910200200014	1	Screw	8		
12	910400500006	1	Spring Washer	6		
13	910200200058	1	Screw	6		
14	910600400025	1	Spring Pin	2		
15	535917520010		Axle	2		
16	910300100006	1	Nut	2		
17	940400100037		Air Spring	2		
18	910200200060	1	Screw	2		
19	910401300001	1	Circlip	2		
20	535917520006		Mounting Base	2		
21	535933510000		Proximity Switch	1		
22	910200200096	1	Screw	4		
23	910400500008	1	Spring Washer	4		
24	910400100008	1	Flat Washer	4		
25	535917520013		Mounting Plate	1		
26	506733010025		Wire Harness	2		
27	910200500014		Screw	4		

05 Platform (535946018001)

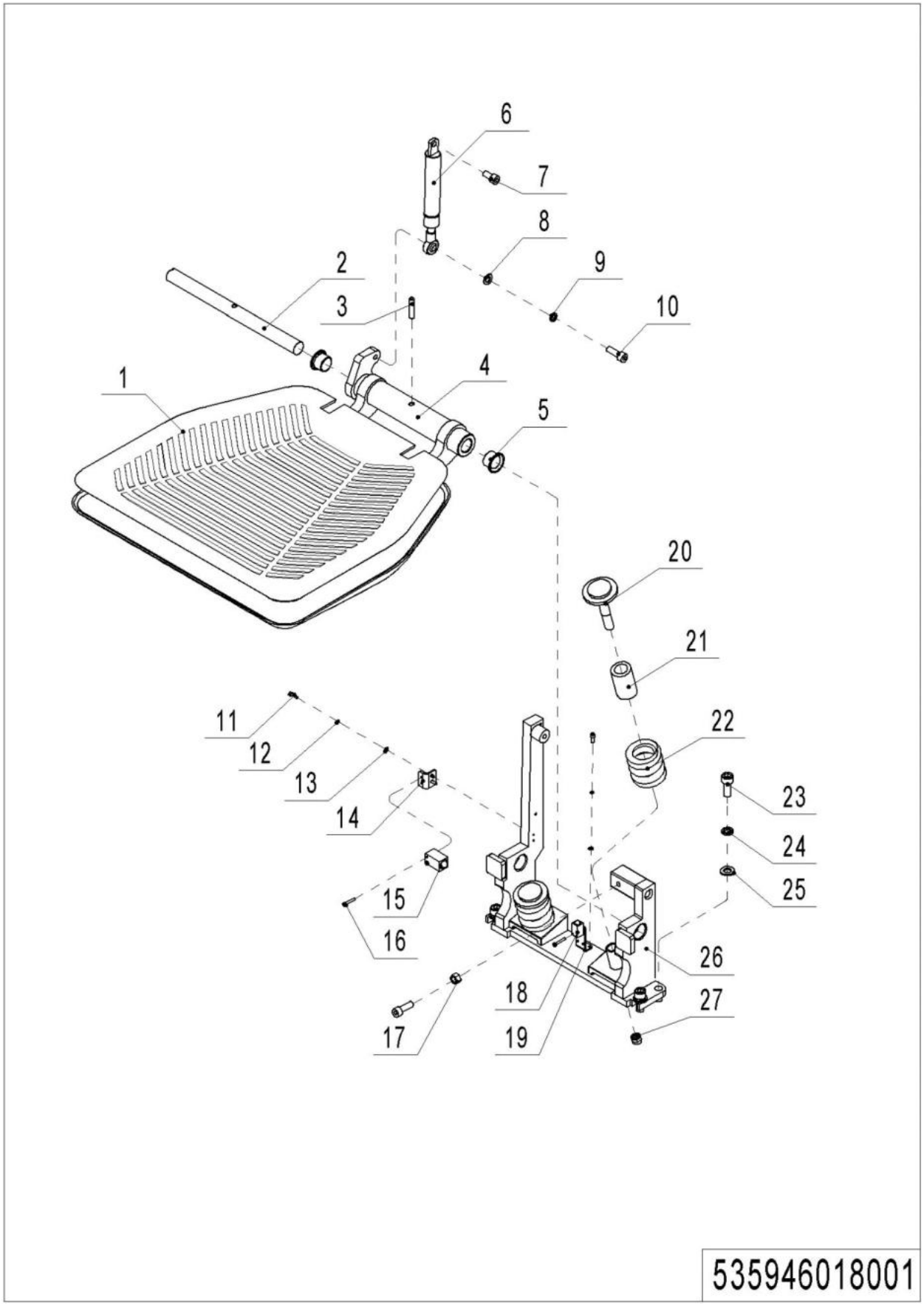

05 Platform (535946018001)

No.	Item Code	Mark	Item Description	Qty.	Substitute	Note
1	535918020019		Pedal Pad	1		
2	535918020014		Axle	1		
3	910600400040	1	Spring Pin	1		
4	535918010001		Platform	1		
5	940500200008		Bushing	2		
6	940400100038		Air Spring	1		
7	910200200057	1	Screw	1		
8	910400100006	1	Flat Washer	1		
9	910400500006	1	Spring Washer	1		
10	910200200058	1	Screw	2		
11	910200200014	1	Screw	4		
12	910400500003	1	Spring Washer	4		
13	910400100003	1	Flat Washer	4		
14	535918020015		Mounting Plate	1		
15	535933510002		Proximity Switch	1		
16	910200500015	1	Screw	2		
17	910300100007	1	Nut	1		
18	506733510005		Proximity Switch	1		
19	535918020022		Mounting Plate	1		
20	535918020017		Bolt	2		
21	535918020018		Cushion Collar	2		
22	535918020016		Spring	2		
23	910200200076	1	Screw	4		
24	910400500007	1	Spring Washer	4		
25	910400100007	1	Flat Washer	4		

Chapter 4: Steering System, Braking System, Wheels

01 Tiller (535946011001)

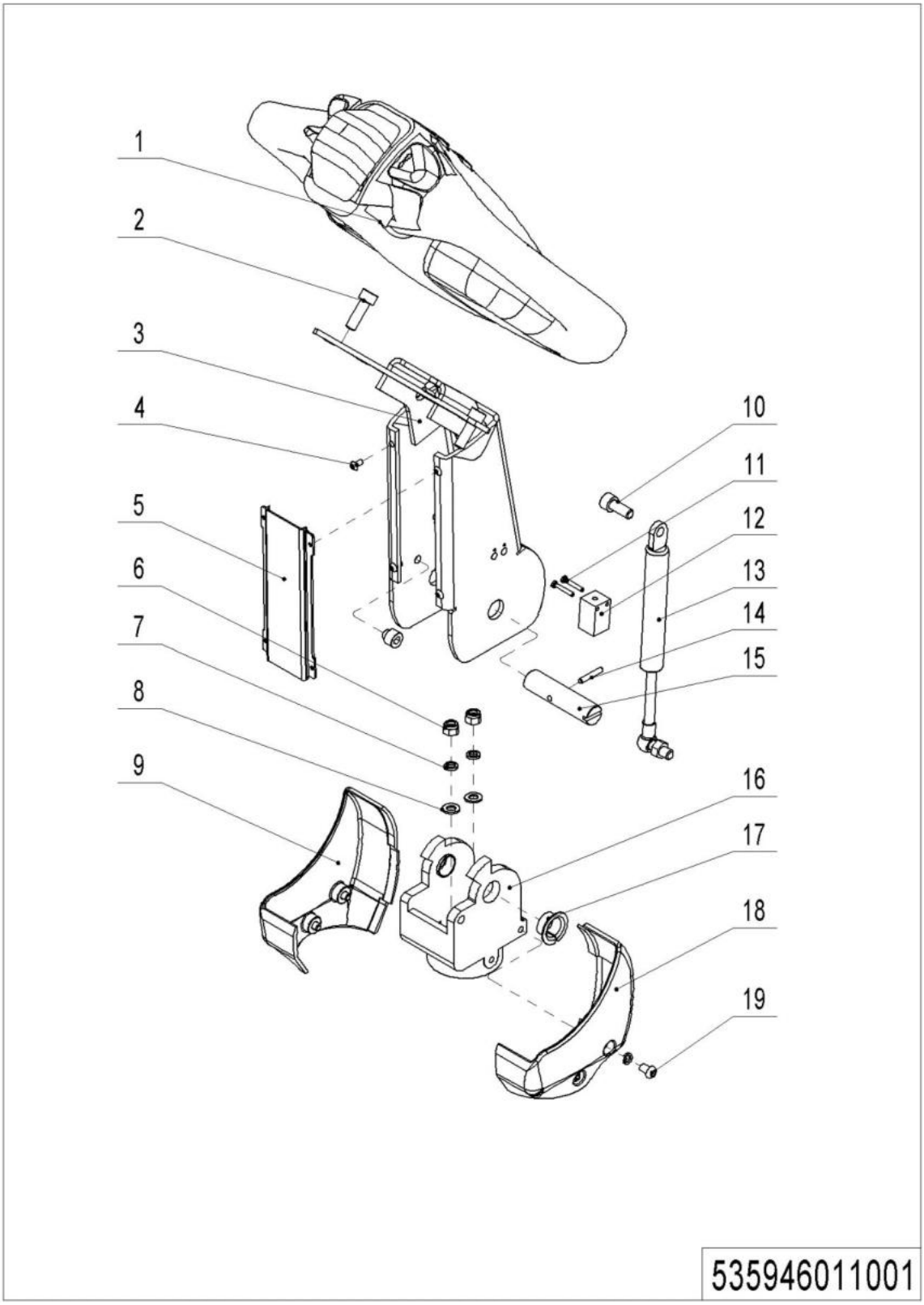

01 Tiller (535946011001)

No.	Item Code	Mark	Item Description	Qty.	Substitute	Note
1	----------		Tiller	1		Check 535946011002
2	910200200058	1	Screw	2		
3	535911010000	2	Tiller	1		
3	535911010001	2	Tiller	1		Short Tiller
4	910200300005	1	Screw	4		
5	535911020003		Close Plate	1		
5	535911020008		Close Plate	1		Short Tiller
6	910300500005	1	Nut	2		
7	910400500007	1	Spring Washer	2		
8	910400100007	1	Flat Washer	2		
9	535911020005		Protective Cover	1		
10	910200200057	1	Screw	1		
11	910200500015	1	Screw	2		
12	506733510002		Proximity Switch	1		
13	940400100001		Air Spring	1		
13	940400100045		Air Spring	1		Short Tiller
14	910600400013	1	Spring Pin	1		
15	505611020008		Axle	1		
16	535911020004		Bracket	1		
16	535911020009		Bracket	1		Short Tiller
17	940500200002		Bushing	2		
18	535911020006		Protective Cover	1		
19	910200300016	1	Screw	4		

02 Tiller (535946011002)

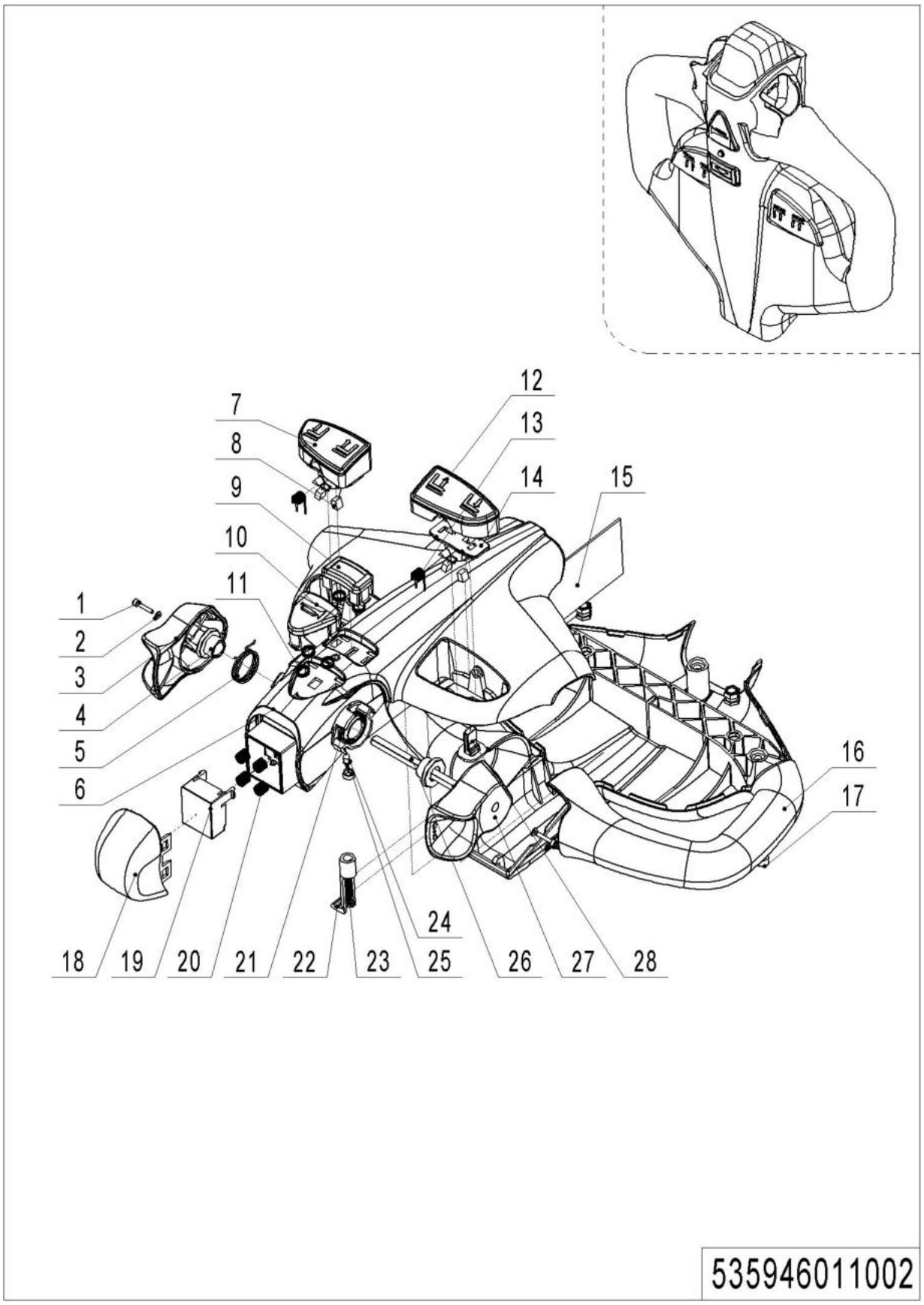

1= Supply as package. 2= Supply with constraints. 3= Phasing-out supply. 4= Supply as assembly. 5= Check other tables.

02 Tiller (535946011002)

No.	Item Code	Mark	Item Description	Qty.	Substitute	Note
--	922100100001		Tiller	1		
1	505698520008		Screw	2		
2	505698520009		Washer	2		
3	505698520001		Traction lever	1		
4	505698520004		Sleeve	2		
5	505698520027		Torsional Spring	1		
6	505698520014		Handle Cap	1		
7	505698520016		Button cap	1		
8	505698520005		Magnet	4		
9	505698520021		Button Cap	1		
10	505698520002		Horn Button	1		
11	505698520003		Spring	5		
12	505698520022		Button Cap	1		
13	505698520018		Torsional Spring	2		
14	505698520017		Fixing Base	2		
15	505698520028		circuit Board	1		
16	505698520015		Handle Cap	1		
17	505698520007		Screw	3		
18	505698520020		Button Cap-	1		
19	505698520019		Pedestal	1		
20	505698520006		Spring	4		
21	505698520026		Torsional Spring	1		
22	505698520012		Clamp	1		
23	505698520023		Screw	1		
24	505698520024		Light	1		
25	505698520025		Lamp Holder	1		
26	505698520011		Axle-Traction lever	1		
27	505698520010		Traction lever	1		
28	505698520013		Sensor	2		

03 Load Wheel (Tandem) (505646017001)

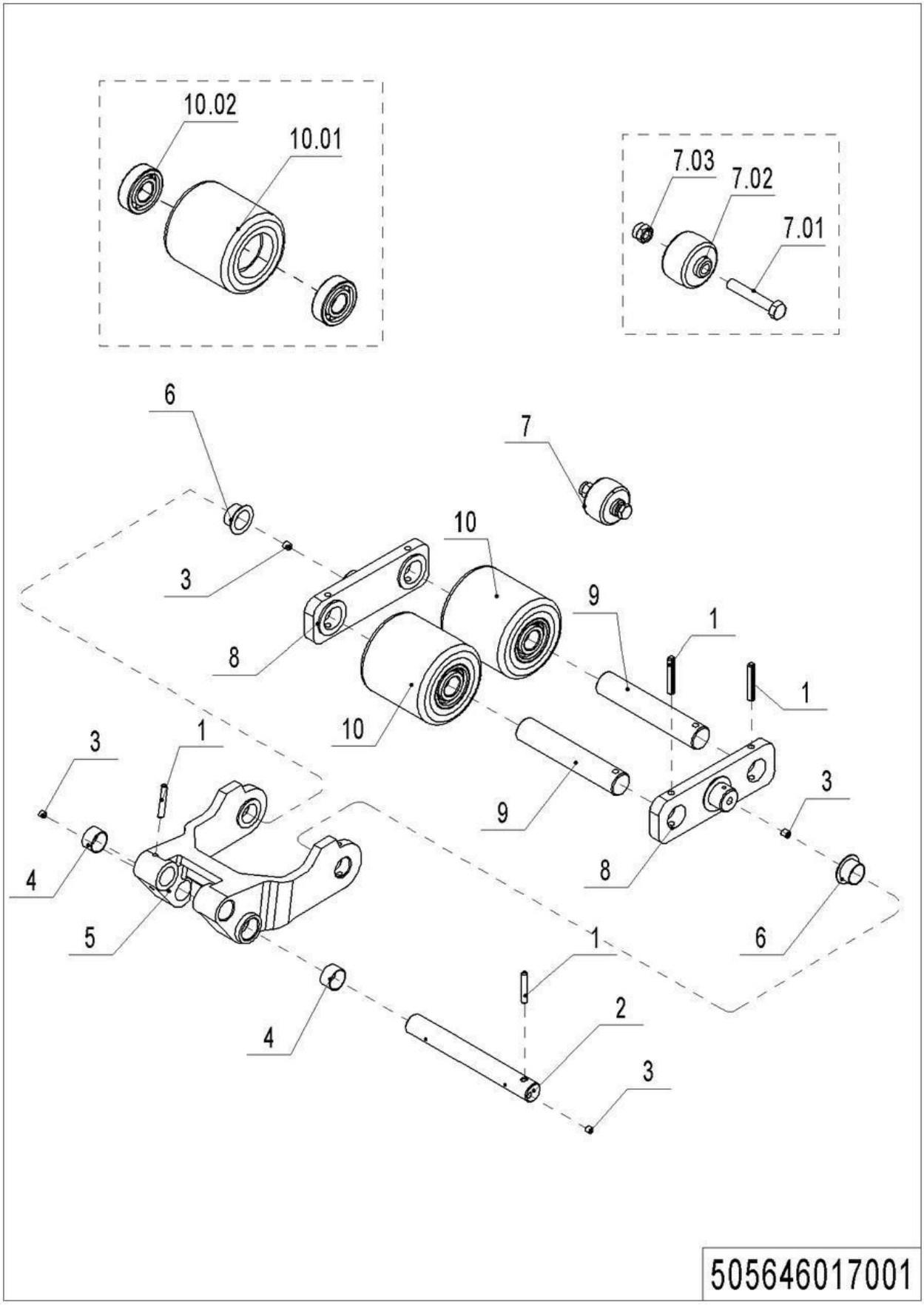

1= Supply as package. 2= Supply with constraints. 3= Phasing-out supply. 4= Supply as assembly. 5= Check other tables.

1= Supply as package. 2= Supply with constraints. 3= Phasing-out supply. 4= Supply as assembly. 5= Check other tables.

03 Load Wheel (Tandem) (505646017001)

No.	Item Code	Mark	Item Description	Qty.	Substitute	Note
1	910600400027	1	Spring Pin	8		
2	505638520038		Pin	2		
3	911200100001		Oil Cup	2		
4	940500100012		Bushing	4		
5	505638520036		Riser	2		
6	940500200003		Bushing	2		
7	502398510003		Pulley components	2		
7.01	910300500005	1	Nut	2		
7.02	505638520039		Running Pulley	2		
7.03	910100100035	1	Bolt	2		
8	505617020001		Plate	4		
9	505617020000		Axle	4		
10	505698510003		Wheel	4		
10.01	940300300010		WheelΦ84x84	4		
10.02	910700200019		Bearing	8		

04 Load Wheel (Single)

(505646017002)

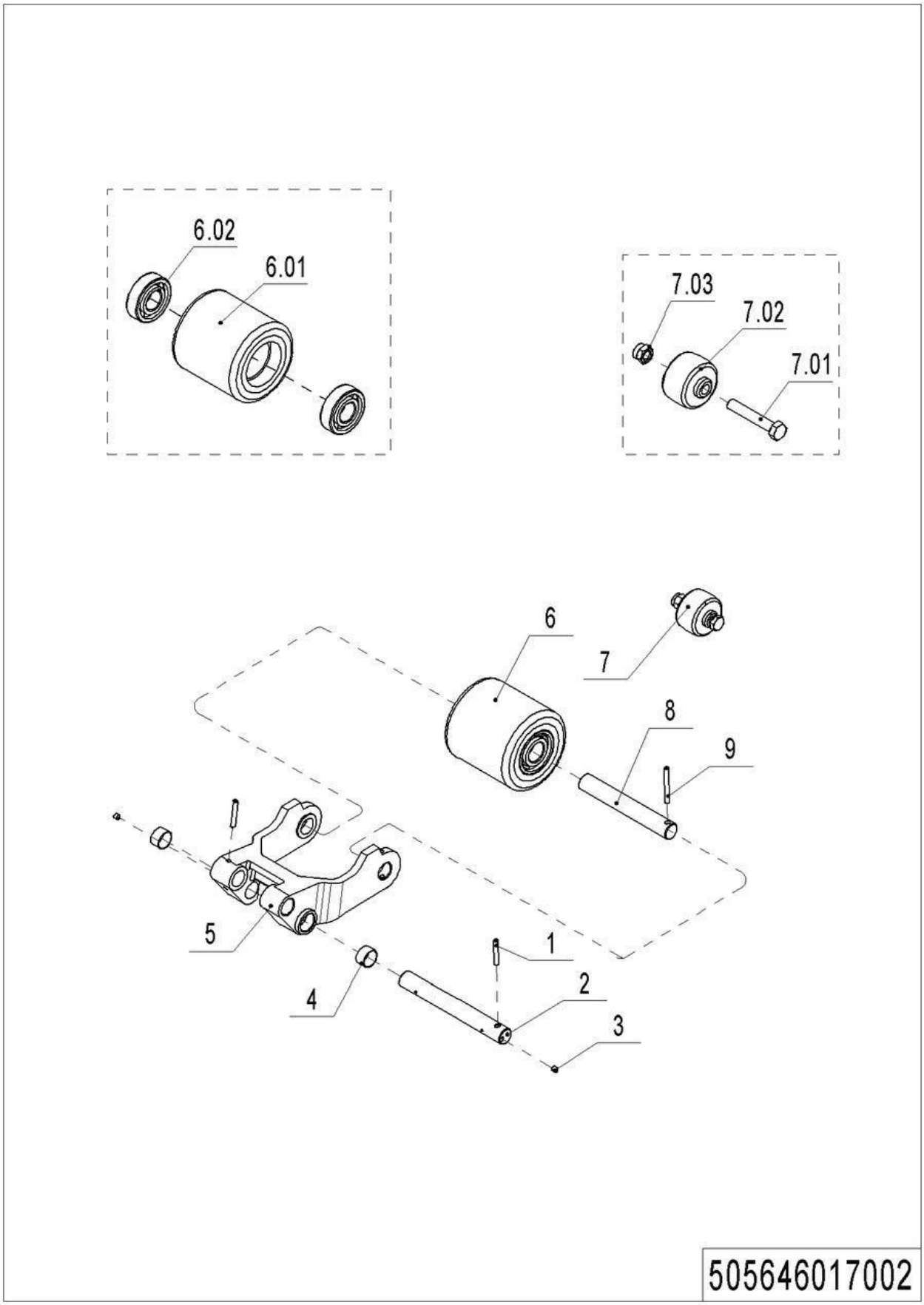

04 Load Wheel (Single) (505646017002)

No.	Item Code	Mark	Item Description	Qty.	Substitute	Note
1	910600400027	1	Spring Pin	4		
2	505638520038		Pin	2		
3	911200100001		Oil Cup	2		
4	940500100012		Bushing	4		
5	505638520036		Riser	2		
6	505698510004		Wheel	2		
6.01	940300300006		WheelΦ82x110	2		
6.02	910700200019		Bearing	4		
7	502398510003		Pulley components	2		
7.01	910300500005		Nut	2		
7.02	505638520039		Running Pulley	2		
7.03	910100100035	1	Bolt	2		
8	505617020002		Axle	2		
9	910600400030	1	Spring Pin	4		

05 Caster (504446016501)

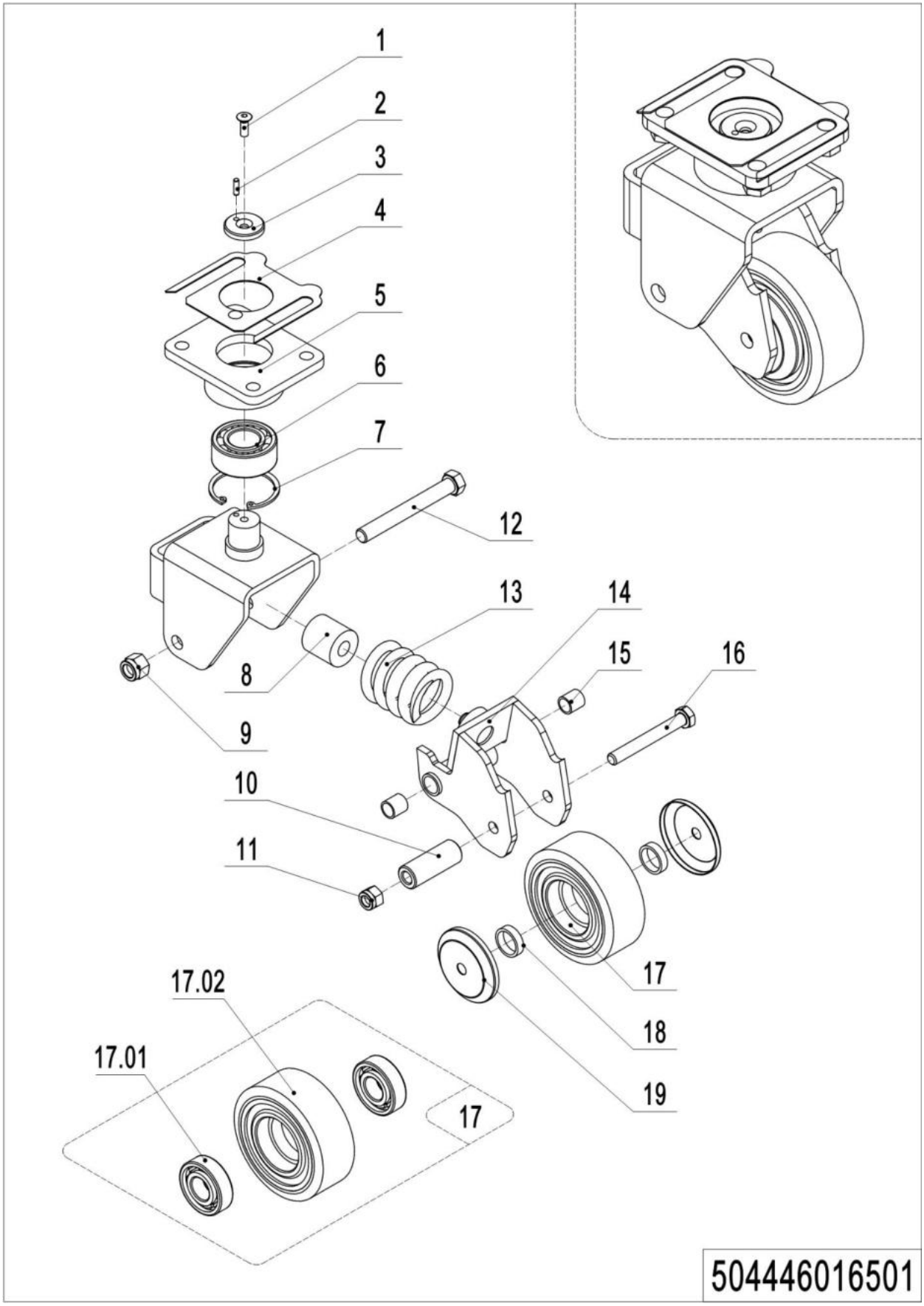

1= Supply as package. 2= Supply with constraints. 3= Phasing-out supply. 4= Supply as assembly. 5= Check other tables.

05 Caster (504446016501)

No.	Item Code	Mark	Item Description	Qty.	Substitute	Note
--	504416510001		Caster Assembly	1		
1	941100300001	1	Screw	1		
2	910600100004	1	Cylindrical Pin	1		
3	505616520007	1	Retaining Ring	1		
4	505616520014		Pad	1		
5	504416510002	2	Plate	1		
6	910700500002		Bearing	1		
7	910401400016	1	Circlip	1		
8	505616520000		Spring	1		
9	910300500006	1	Nut	1		
10	505616520013	1	Bushing	1		
11	910300500005	1	Nut	1		
12	941100200002	1	Bolt	1		
13	940400500006	1	Spring	1		
14	505616510003	2	Whirling Arm	1		
15	940500100002		Bushing	2		
16	910100100038	1	Bolt	1		
17	505698510000		Wheel	1		
17.01	910700200019		Bearing	2		
17.02	940300300018		WheelΦ100x40	1		
18	505616520012	1	Check Ring	2		
19	505616520011		Dust Cap	2		

Chapter 5: Electrical Parts

01 Display Assembly (535946010001)

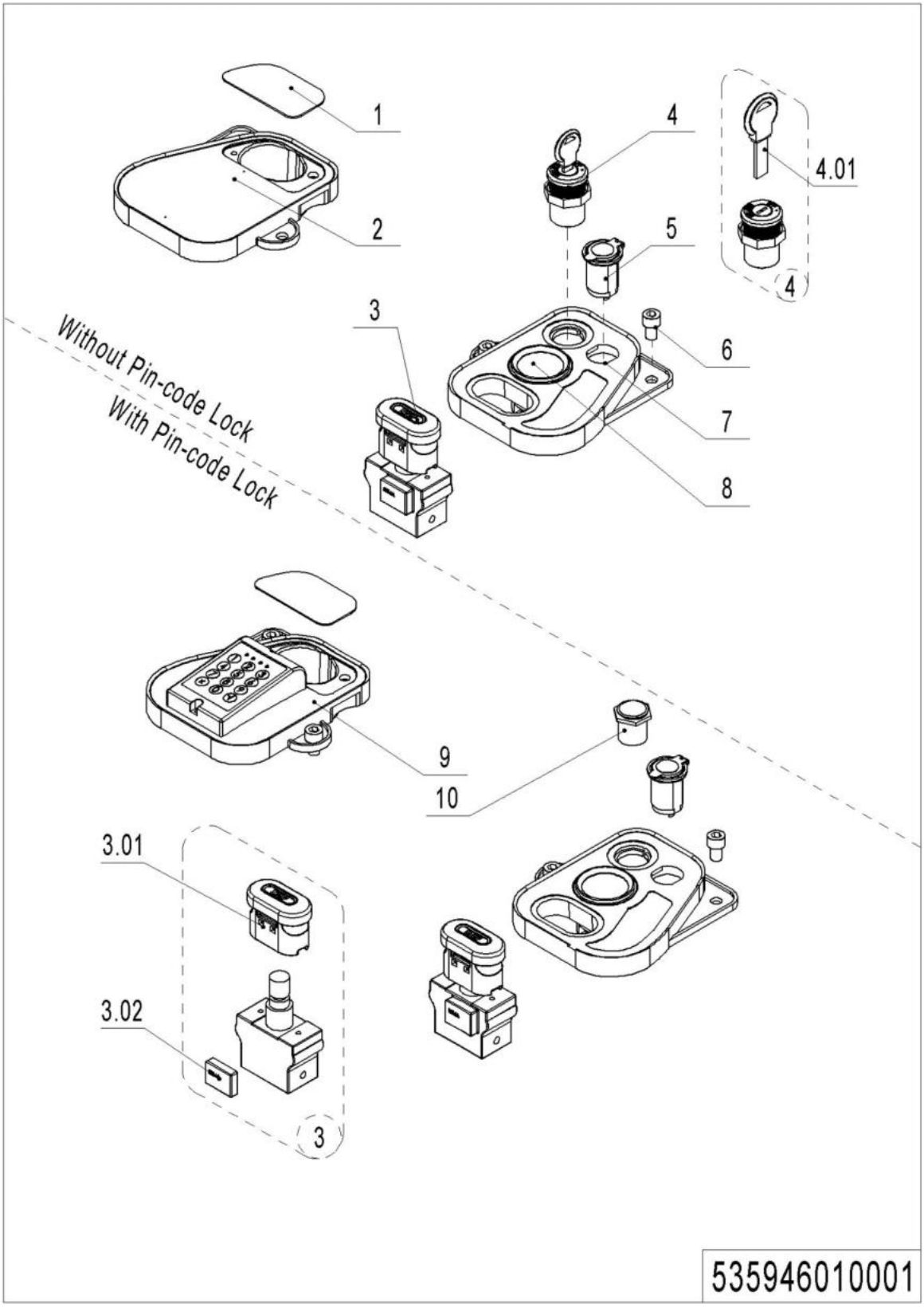

1= Supply as package. 2= Supply with constraints. 3= Phasing-out supply. 4= Supply as assembly. 5= Check other tables.

01 Display Assembly (535946010001)

No.	Item Code	Mark	Item Description	Qty.	Substitute	Note
1	535910020003		Close Plate	1		
2	535910020002		Bezel	1		
3	920200100009		Emergency Button	1		
3.01	920200100010		Emergency Button	1		
3.02	920200100012		Emergency Button	1		
4	505634010000		Key Switch	1		
4.01	920200200001		Key Switch	1		
5	206033010036		USB interface	1		
6	910200200074	1	Screw	4		
7	535910020001		Bezel	1		
8	921100100012		Display	1		
9	920200200014		Pin-code Lock	1		
10	506734010000		Button	1		

02 Wire Harness (Manual Steering) (506746033001)

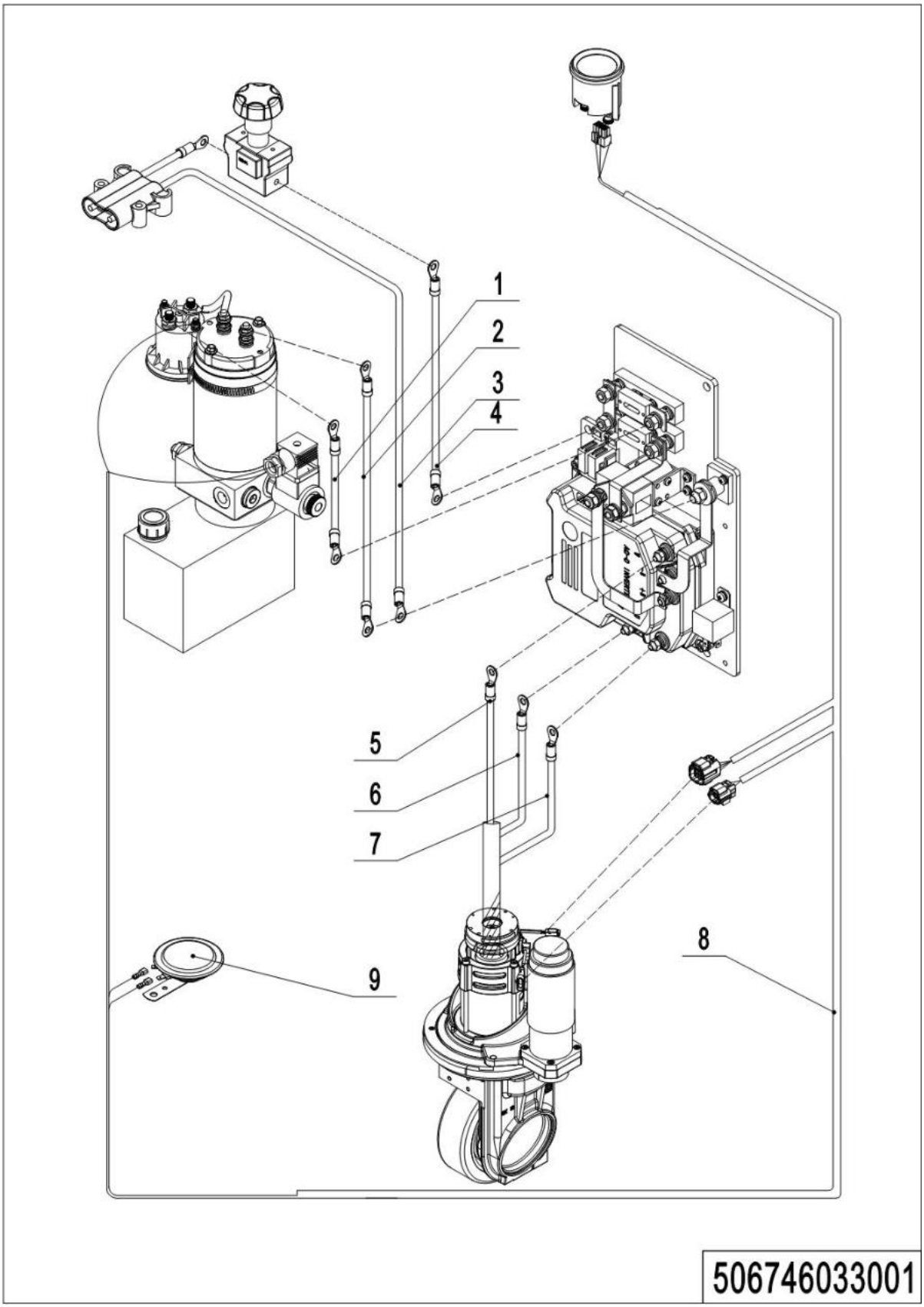

02 Wire Harness (Manual Steering) (506746033001)

No.	Item Code	Mark	Item Description	Qty.	Substitute	Note
1	506733010011		Cable	1		
2	506733010012		Cable	1		
3	506733010013		Wire Harness	1		
4	506733010014		Cable	1		
5	506733010005		Cable	1		
6	506733010006		Cable	1		
7	506733010007		Cable	1		
8	506733010000		Wire Harness	1		
9	920500100001		Horn	1		

03 Wire Harness (Electrical Steering) (506746033002)

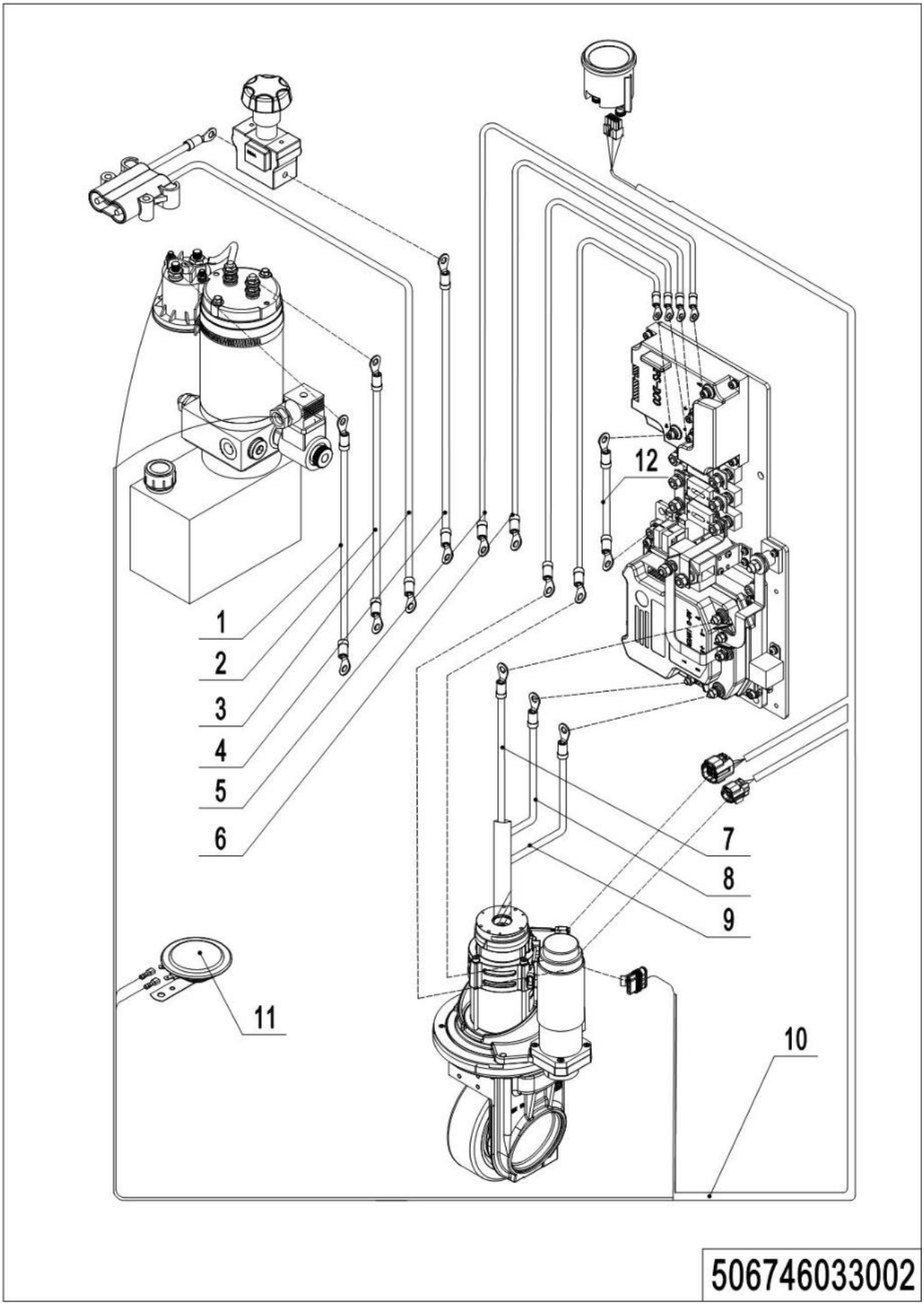

03 Wire Harness (Electrical Steering) (506746033002)

No.	Item Code	Mark	Item Description	Qty.	Substitute	Note
1	506733010011		Cable	1		
2	506733010012		Cable	1		
3	506733010013		Wire Harness	1		
4	506733010014		Cable	1		
5	506733010017		Cables	1		
6	506733010015		Cables	1		
7	506733010005		Cable	1		
8	506733010006		Cable	1		
9	506733010007		Cable	1		
10	506733010001		Wire Harness	1		
11	920500100001		Horn	1		
12	506733010016		Cables	1		

04 Controller (Manual Steering) (506746033003)

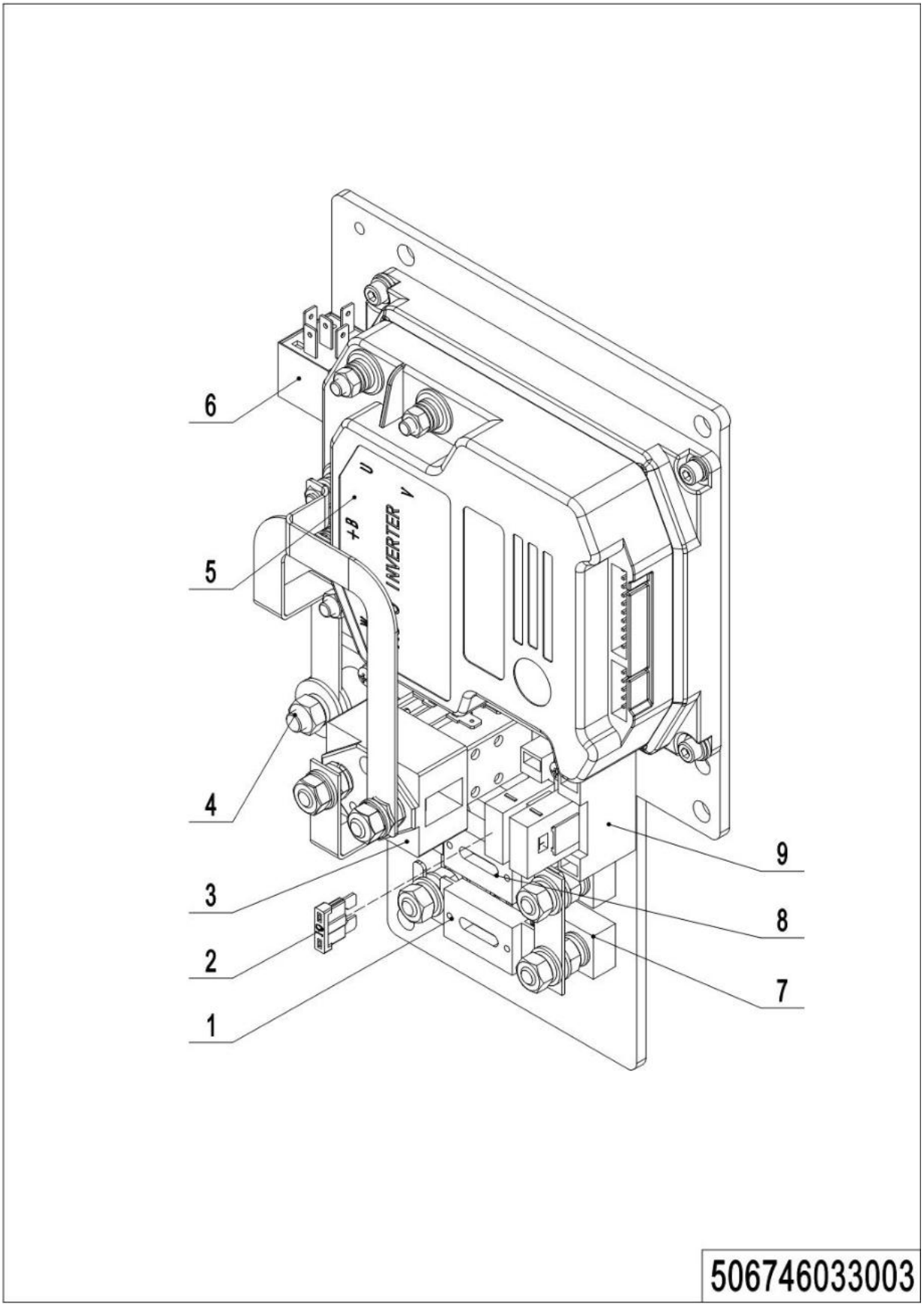

1= Supply as package. 2= Supply with constraints. 3= Phasing-out supply. 4= Supply as assembly. 5= Check other tables.

04 Controller (Manual Steering) (506746033003)

No.	Item Code	Mark	Item Description	Qty.	Substitute	Note
1	920100100004		Fuse	1		
2	920100200002		Fuse	1		
3	920700100004		Contactor	1		
4	920100400001		Fuse Holder	1		
5	921400100025		Controller	1		
6	920800100001		Relay	1		
7	920100400002		Fuse Holder	1		
8	920100100007		Fuse	1		
9	920100400005		Fuse Holder	1		

05 Controller (Electrical Steering) (506746033004)

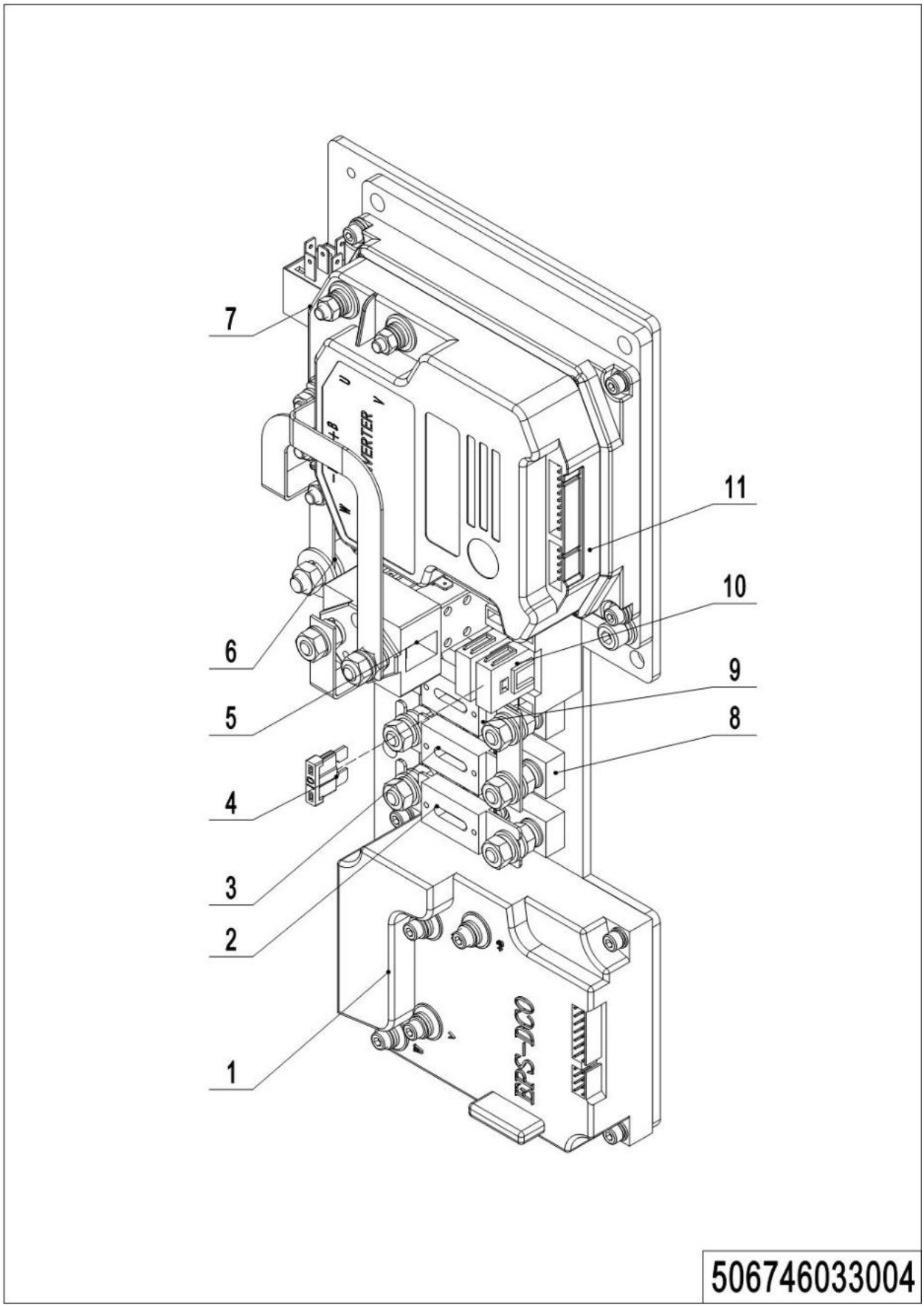

1= Supply as package. 2= Supply with constraints. 3= Phasing-out supply. 4= Supply as assembly. 5= Check other tables.

05 Controller (Electrical Steering) (506746033004)

No.	Item Code	Mark	Item Description	Qty.	Substitute	Note
1	921400100030		Controller	1		
2	920100100001		Fuse	1		
3	920100100004		Fuse	1		
4	920100200002		Fuse	1		
5	920700100004		Contactor	1		
6	920100400001		Fuse Holder	1		
7	920800100001		Relay	1		
8	920100400002		Fuse Holder	1		
9	920100100007		Fuse	1		
10	920100400005		Fuse Holder	1		
11	921400100025		Controller	1		

06 Charger (506746036501)

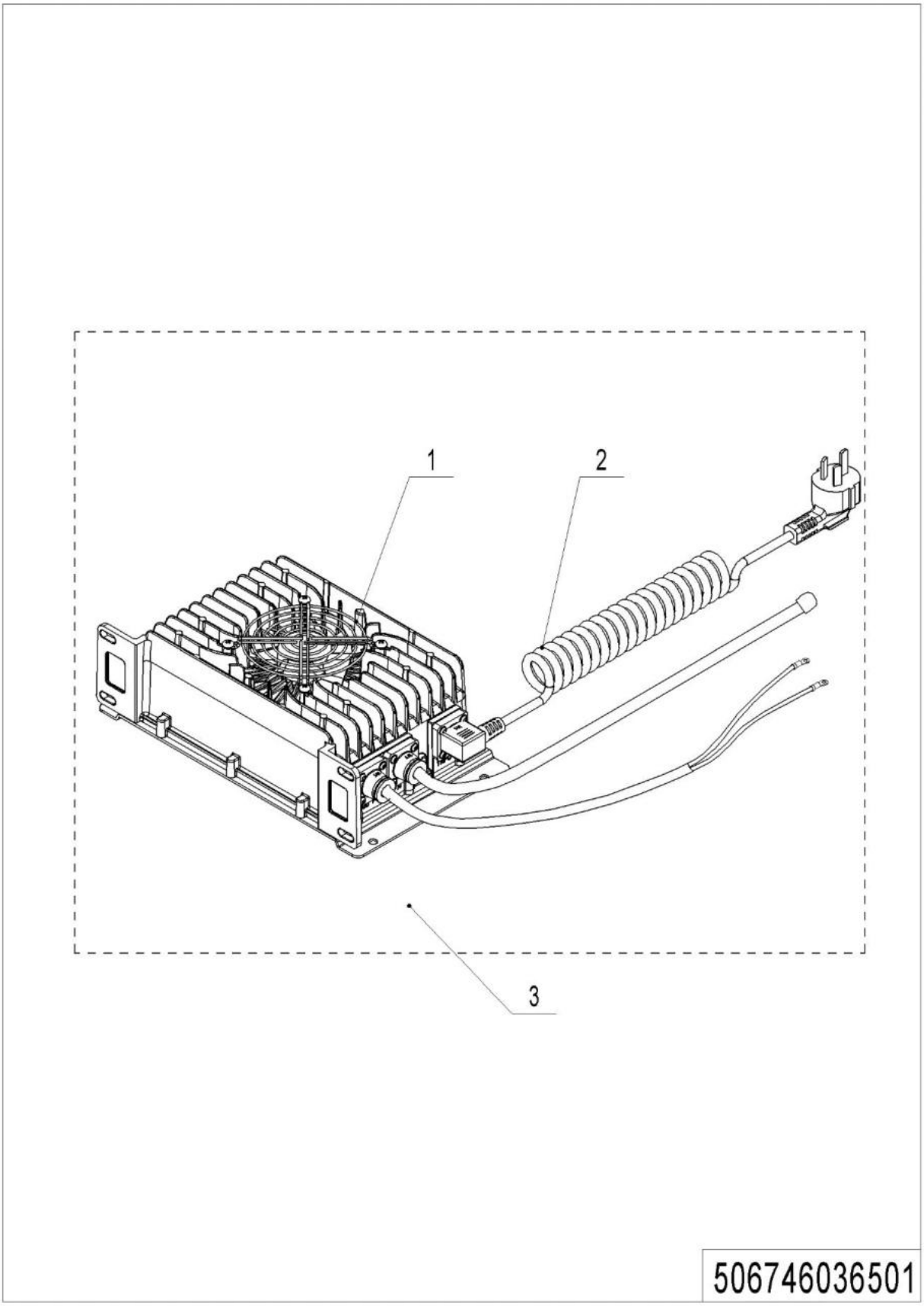

06 Charger (506746036501)

No.	Item Code	Mark	Item Description	Qty.	Substitute	Note
1	921000100038		Charger24V20A	1		
2	921500200008		Spring Cable（Asia）	1		
2	921500200005		Spring Cable(EU)	1		
2	921500200003		Spring Cable(AUS)	1		
2	921500200004		Spring Cable(ENG)	1		
2	921500200002		Spring Cable(USA)	1		
2	921500200037		Spring Cable(ARG)	1		
3	506702036501		Charger24V20A(Aisa-CHN)	1		**TL**
3	506702036502		Charger24V20A(Aisa-ENG)	1		**TL**
3	506702036503		Charger24V20A(EU)	1		**TL**
3	506702036504		Charger24V20A(AUS)	1		**TL**
3	506702036505		Charger24V20A(ENG)	1		**TL**
3	506702036506		Charger 24V20A(USA)	1		**TL**
3	506702036558		charger24V/20A(ARG)	1		**TL**
3	921000200281		Charger24V20A(Aisa-CHN)	1		**TL**
3	921000200287		Charger24V20A(Aisa-ENG)	1		**TL**
3	921000200291		Charger24V20A(EU)	1		**TL**
3	921000200299		Charger24V20A(AUS)	1		**TL**
3	921000200295		Charger24V20A(ENG)	1		**TL**
3	921000200303		Charger24V20A(USA)	1		**TL**
3	921000200421		Charger24V20A(ISR)	1		**TL**
3	921000200391		Charger24V20A(Aisa-CHN)	1		**SN**
3	921000200392		Charger24V20A(Aisa-ENG)	1		**SN**
3	921000200393		Charger24V20A(EU)	1		**SN**
3	921000200395		Charger24V20A(AUS)	1		**SN**
3	921000200394		Charger24V20A(ENG)	1		**SN**
3	921000200396		Charger24V20A(USA)	1		**SN**
3	506702036513		Charger 24V30A(Aisa)	1		**TL**
3	506702036515		Charger24V30A(EU)	1		**TL**
3	506702036516		Charger24V30A(AUS)	1		**TL**

1= Supply as package. 2= Supply with constraints. 3= Phasing-out supply. 4= Supply as assembly. 5= Check other tables.

06 Charger (506746036501) Continuation

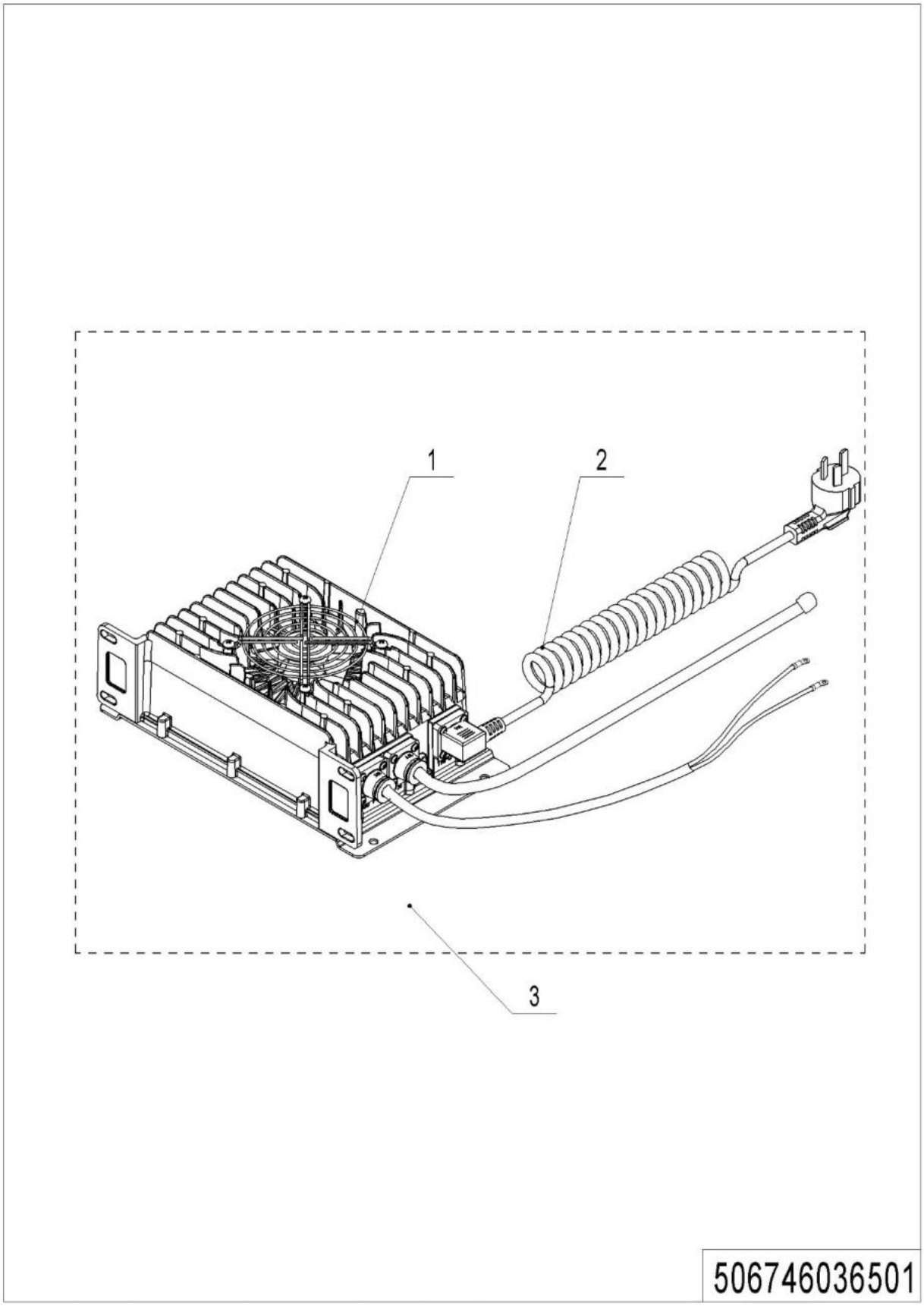

06 Charger (506746036501) Continuation

No.	Item Code	Mark	Item Description	Qty.	Substitute	Note
3	506702036517		Charger24V30A(ENG)	1		**TL**
3	506702036518		Charger 24V30A(USA)	1		**TL**
3	506702036519		charger24V/30A(ARG)	1		**TL**
3	921000200283		Charger24V30A(Aisa-CHN)	1		**TL**
3	921000200289		Charger24V30A(Aisa-ENG)	1		**TL**
3	921000200293		Charger24V30A(EU)	1		**TL**
3	921000200301		Charger24V30A(AUS)	1		**TL**
3	921000200297		Charger24V30A(ENG)	1		**TL**
3	921000200305		Charger24V30A(USA)	1		**TL**
3	921000200001		Charger24V30A(Aisa-CHN)	1		**SN**
3	921000200002		Charger24V30A(Aisa-ENG)	1		**SN**
3	921000200003		Charger24V30A(EU)	1		**SN**
3	921000200004		Charger24V30A(AUS)	1		**SN**
3	921000200005		Charger24V30A(ENG)	1		**SN**
3	921000200006		Charger24V30A(USA)	1		**SN**

07 Battery (506746037001)

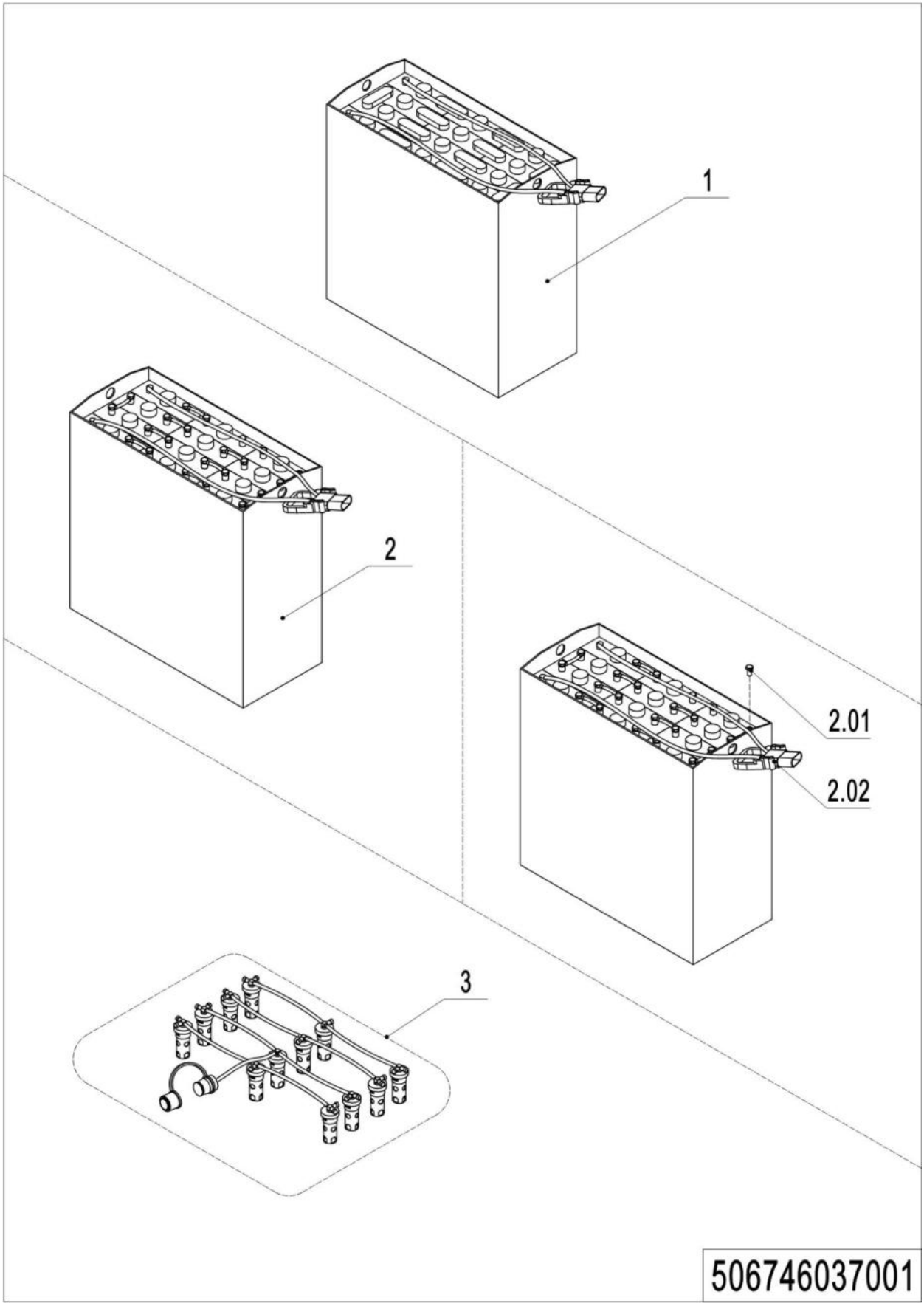

1= Supply as package. 2= Supply with constraints. 3= Phasing-out supply. 4= Supply as assembly. 5= Check other tables.

07 Battery (506746037001)

No.	Item Code	Mark	Item Description	Qty.	Substitute	Note
1	506737010002		Battery24V160Ah(welded)	1		
1	505637010001		Battery24V210Ah(welded)	1		
1	506937010002		Battery24V270Ah(welded)	1		
2	506737010005		Battery24V160Ah	1		
2	506737010001		Battery24V160Ah	1		
2	505637010000		Battery24V210Ah	1		
2	506937010001		Battery24V270Ah	1		
2.01	920400100007		Connector	1		General Use
2.02	505698520000		Bolt	24		Bolted Only
3	535937110000		Water refilling system	1		Optional

Chapter 6: Special Parts

01 Load Backrest (506746040501)

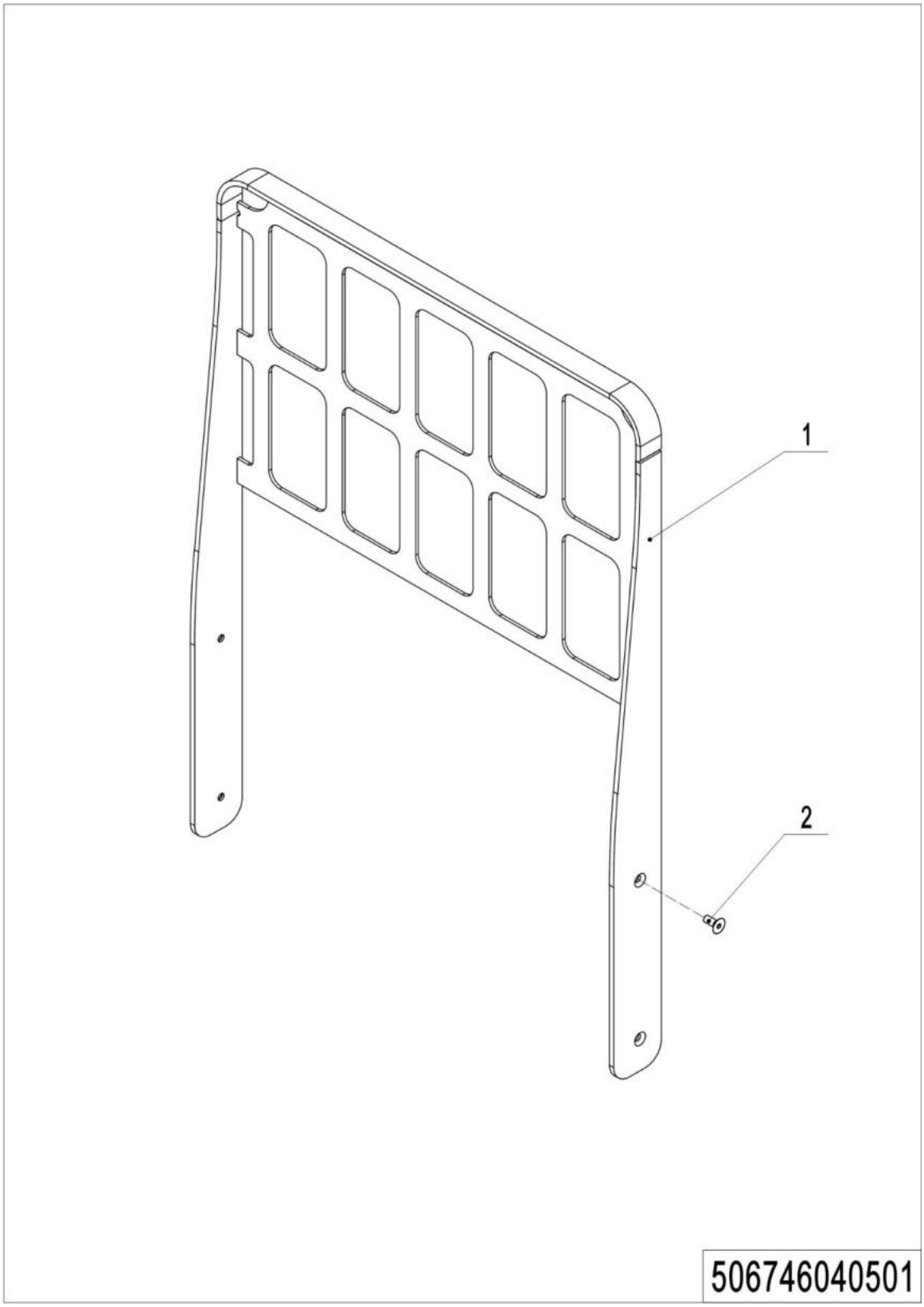

01 Load Backrest (506746040501)

No.	Item Code	Mark	Item Description	Qty.	Substitute	Note
1	506740510001	2	Load Backrest	1		
2	910200400036	1	Screw	4		

02 Load Backrest (Side Extraction) (506746040502)

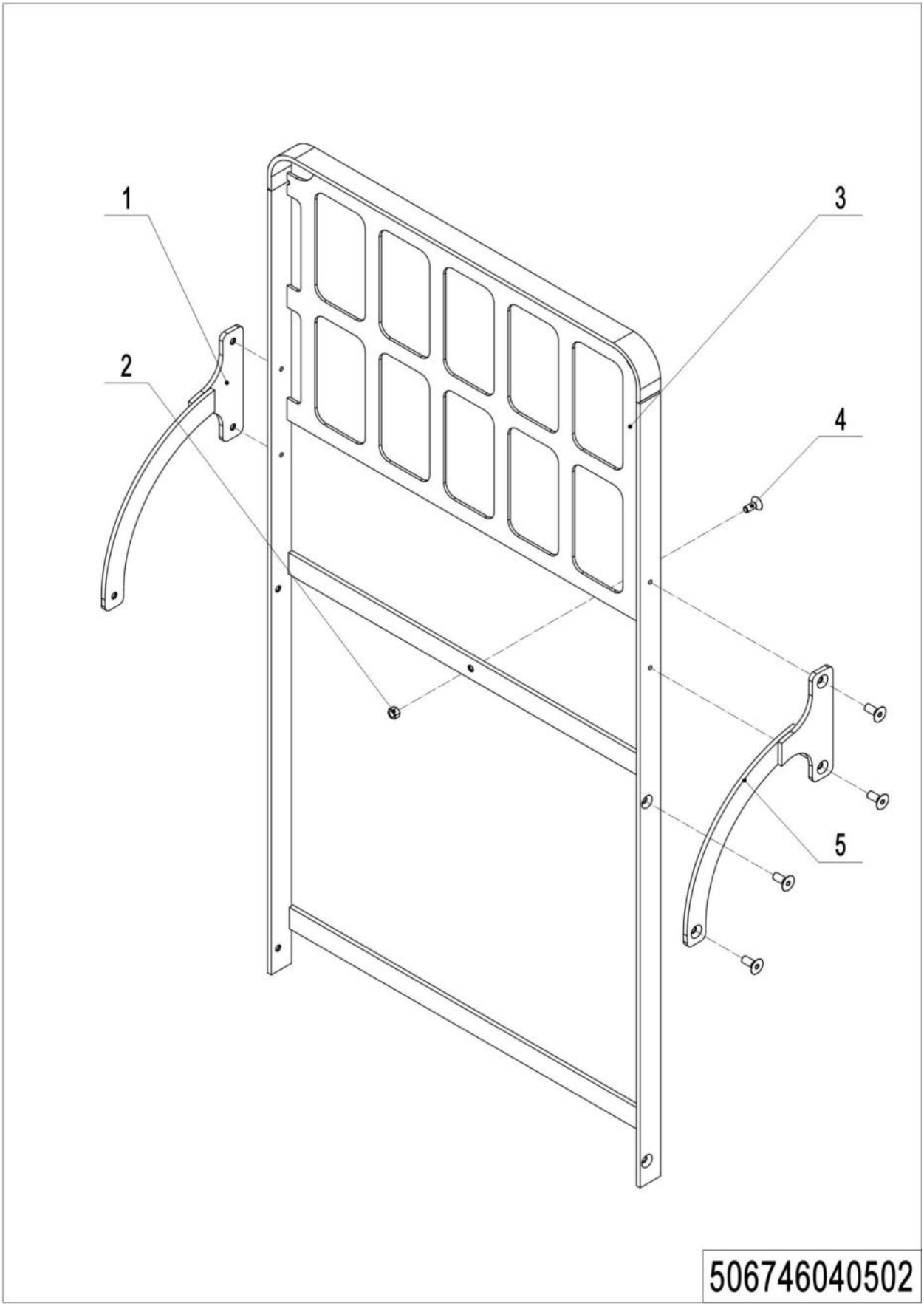

1= Supply as package. 2= Supply with constraints. 3= Phasing-out supply. 4= Supply as assembly. 5= Check other tables.

02 Load Backrest (Side Extraction) (506746040502)

No.	Item Code	Mark	Item Description	Qty.	Substitute	Note
1	506740510002	2	Plate	1		
2	910300100007	1	Nut	1		
3	506740510000	2	Load Backrest	1		
4	910200400036	1	Screw	7		
5	506740510003	2	Support Plate	1		

Chapter 7: Others

01 Labels and Decals (EU) (506746047001)

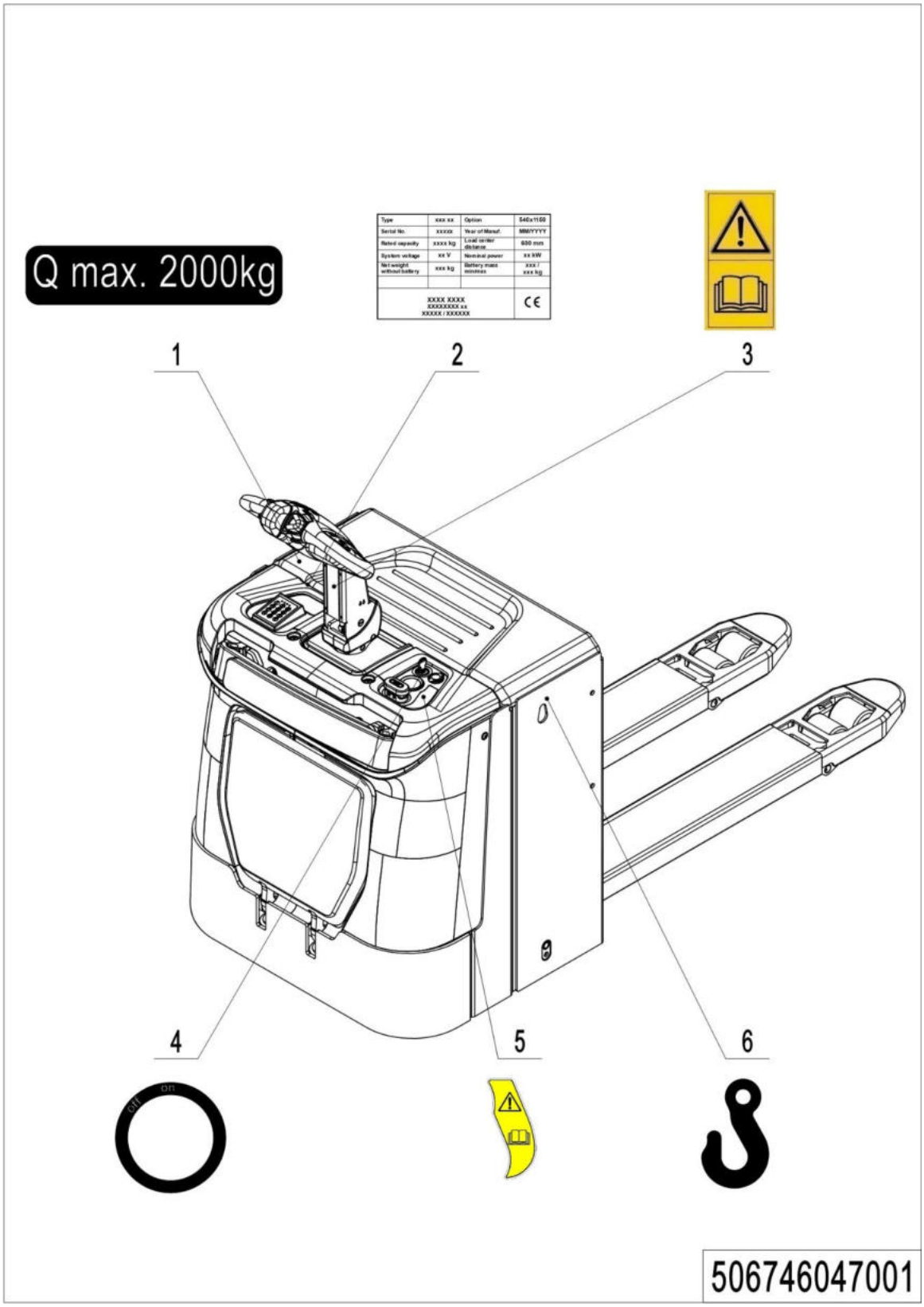

01 Labels and Decals (EU) (506746047001)

No.	Item Code	Mark	Item Description	Qty.	Substitute	Note
1	941200200010		Label	1		
2	506747520000		Truck data plate	1		
3	941200300002		Label	1		
4	941200400013		Label	1		
5	941200300018		Label	1		
6	941200300001		Label	2		

Appendix

01 Electrical Circuit Diagram (Manual Steering) (506746045501)

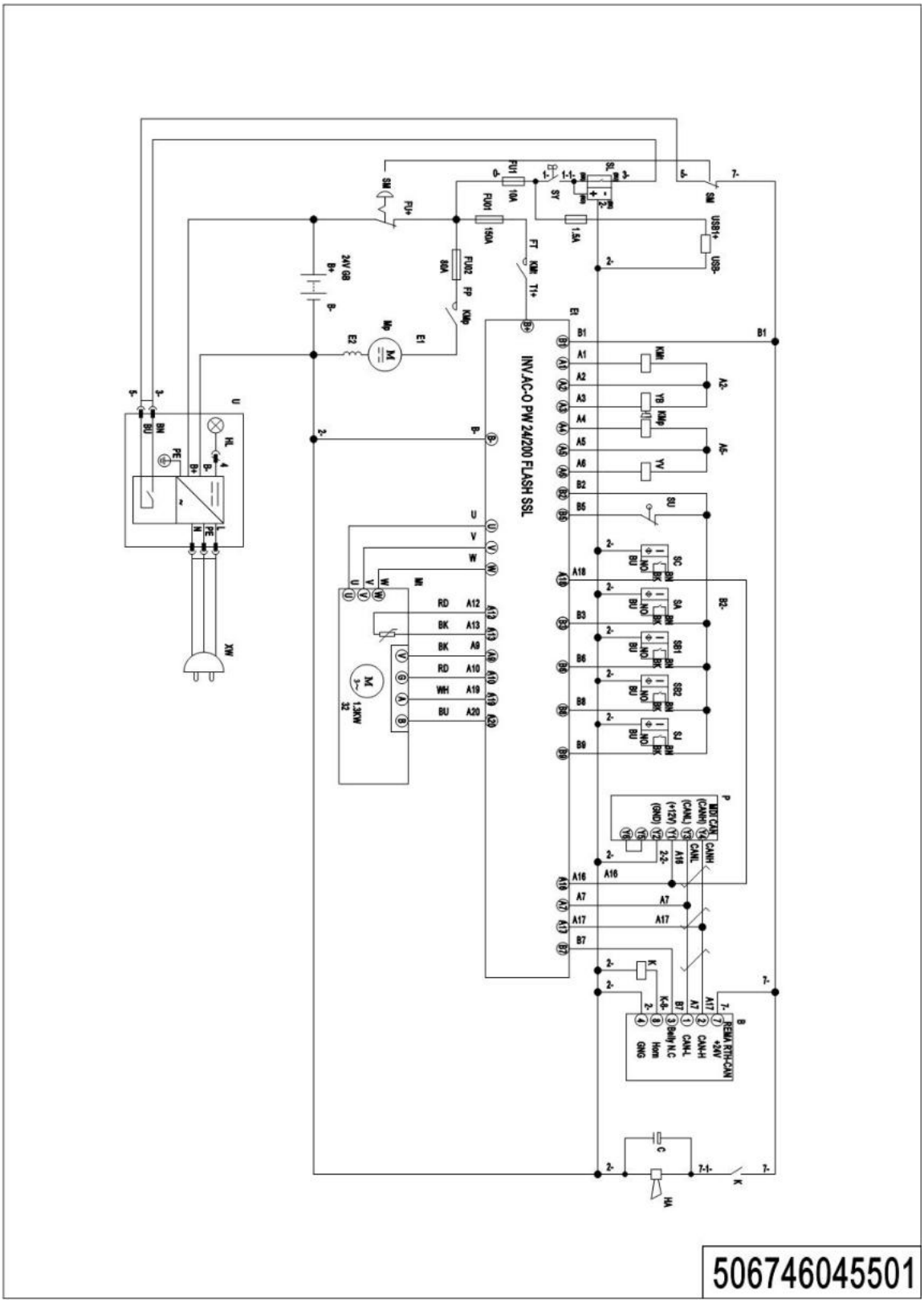

02 Electrical Circuit Diagram (Electrical Steering) (506746044502)

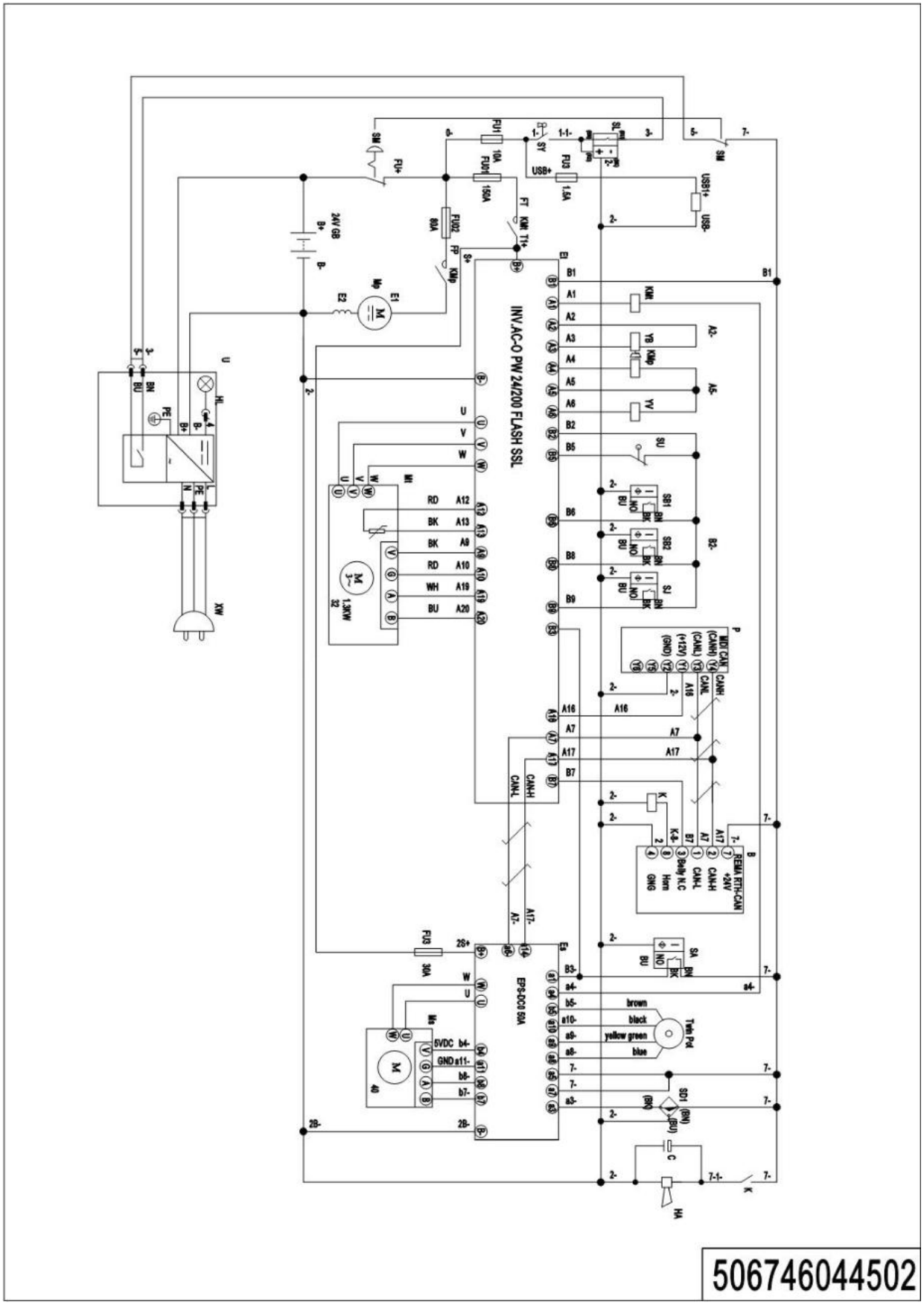

03 Hydraulic Circuit Diagram (506746045504)

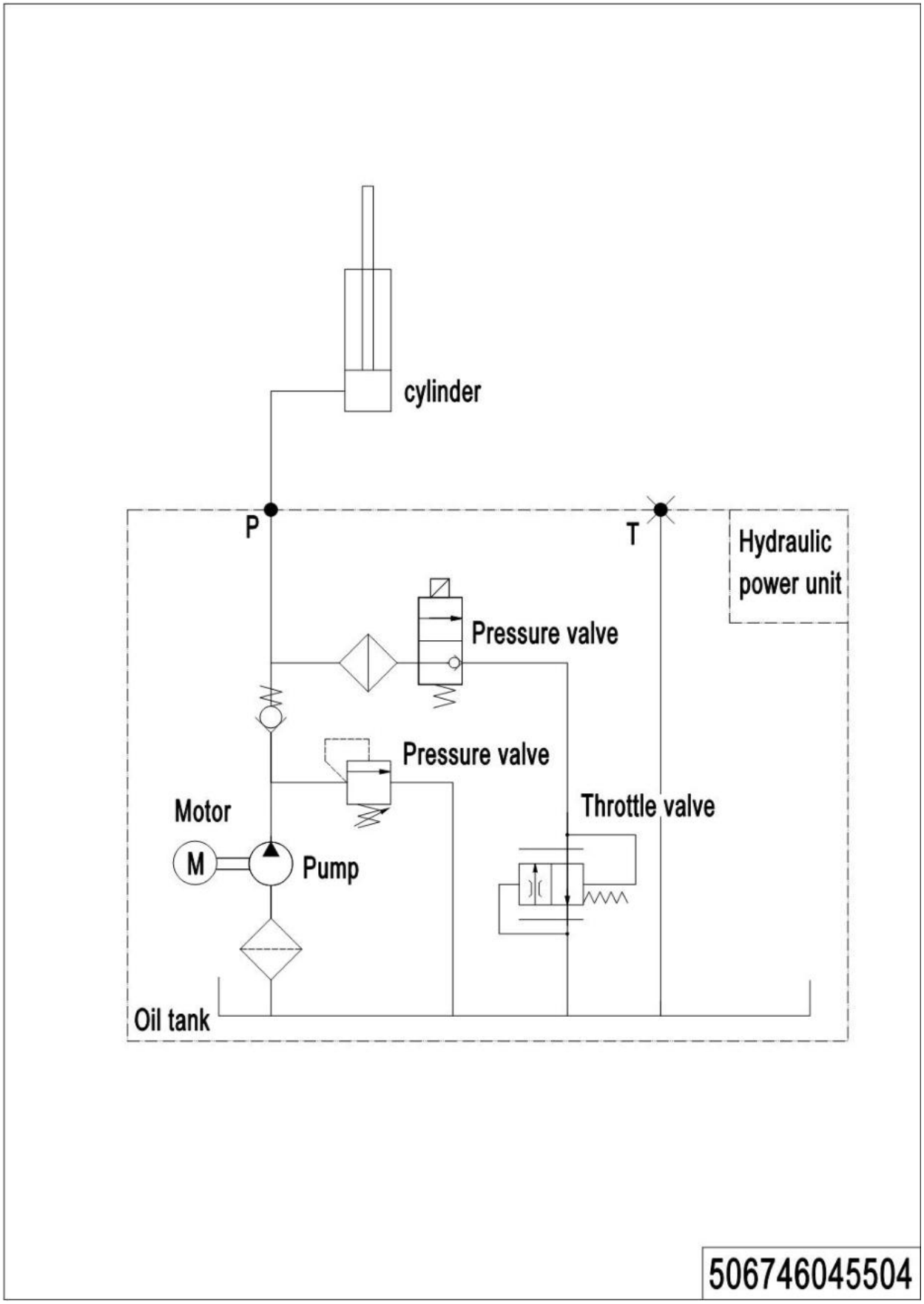

04 Consumable Parts List

No.	Item Code	Item Description	Qty.	Chapter/ Section/ Number
1	940300400005	WheelΦ230x70	1	Chapter 1/01/8 Chapter 1/03/7
2	504498510000	Seal Kit	1	Chapter 2/01/11.01
3	505798510013	Carbon Brush	1	Chapter 2/02/12
4	940400100038	Air Spring	1	Chapter 3/05/6
5	940400100001	Air Spring	1	Chapter 4/01/13
6	940400100045	Air Spring	1	Chapter 4/01/13
7	940300300010	WheelΦ84x84	4	Chapter 4/02/10.01
8	910700200019	Bearing	8	Chapter 4/02/10.02 Chapter 4/03/6.02
9	910700200019	Bearing		Chapter 4/04/17.01
10	940300300006	WheelΦ82x110	2	Chapter 4/03/6.01
11	910700500002	Bearing	1	Chapter 4/04/6
12	940300300018	WheelΦ100x40	1	Chapter 4/04/17.02
13	920100100004	Fuse	1	Chapter 5/04/1
14	920100200002	Fuse	1	Chapter 5/04/2 Chapter 5/05/4
15	920100100007	Fuse	1	Chapter 5/04/8 Chapter 5/05/9
16	920100100001	Fuse	1	Chapter 5/05/2
17	920100200002	Fuse	1	Chapter 5/05/4