NOBLELIFT

Scan QR Code for More

Service Hotline: 836115

Electric Pallet Truck PWB-200

PARTS MANUAL

511646010101

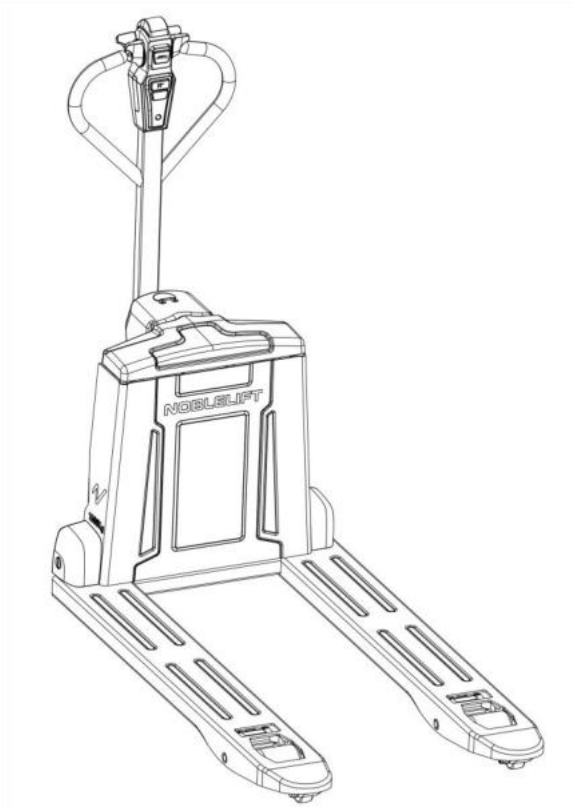

Version：V02

Truck Identification Number From：

Parts Manual

PWB-200-PM02EN

Please order spare parts from authorized dealers of Noblelift Intelligent Equipment Co., LTD.

In order to avoid wrong delivery, all the orders for spare parts should specify the following items:

- Truck model, identification number and manufacture year.
- Orders for spare parts of mast, hydraulic transmission unit, steering axle, motor, etc. shall indicate the manufacture number of these parts.
- Codes for Noblelift spare parts are shown in the table of parts manual. Please also pay attention to the description of supply status, order quantity, etc. (check the number listed in "Mark" column of the parts manual).

"Mark" Column:

The unmarked indicates the parts are in short supply cycle.

Number 1: supply as package. Indicating these that parts are small parts and seal parts, which are supplied in package unit and in short supply cycle.

Number 2: supply with constraints. Indicating that these spare parts are not in stock and will be prepared for production after receiving the order from customers, which are in long supply cycle.

Number 3: phasing-out supply. Indicating that these parts will be replaced by new parts due to technical improvements and the current stock will not be available when these parts run out. Please check the description of technical improvements notice.

Number 4: supply as assembly. Indicating that these parts are assembly parts defined by manufacture process, which cannot be supplied as a single part.

Number 5: check other tables.

This parts manual is the property of Noblelift and can be shared under the confidential agreement only, Noblelift has the right to claim for compensation of any unauthorized use. Copy without permission is not allowed. Figures in the manual are not limited by the original design. Noblelift Intelligent Equipment Co., LTD reserves the right to improve the products for continuous technology progress.

Table of Contents

Chapter 1: Drive System 4
01 Drive Unit Steering(511646013501) 4
02 Drive Assembly(AZ)(511646013501) 6
Chapter 2: Hydraulic System 8
01 Hydraulic Components(511646023502) 8
Chapter 3: Truck Frame 10
01 Truck Frame (511846038501) 10
02 Truck Frame (511846038502) 12
Chapter 4: Steering System, Braking System, Wheels 14
01 Tiller Unit(511646011001) 14
02 Tiller(511646011002) 16
03 Load Wheel (Tandem)(511846017001) 18
04 Caster (509946016504) 20
Chapter 5: Electrical Parts 22
01 Wire Harness (511646033001) 22
02 Electronic components (511646033002) 24
03 Charger (511646036501) 26
04 Traction Battery (511646037001) 28
Chapter 6: Others 30
01 Labels and Decals-EU (511846047003) 30
02 Labels and Decals-US (511846047004) 32
Appendix 34
01 Electrical Circuit Diagram (511646045501) 34
02 Electrical Circuit Diagram (508046045502) 35
03 Consumable Parts List 36

Chapter 1: Drive System

01 Drive Unit Steering(511646013501)

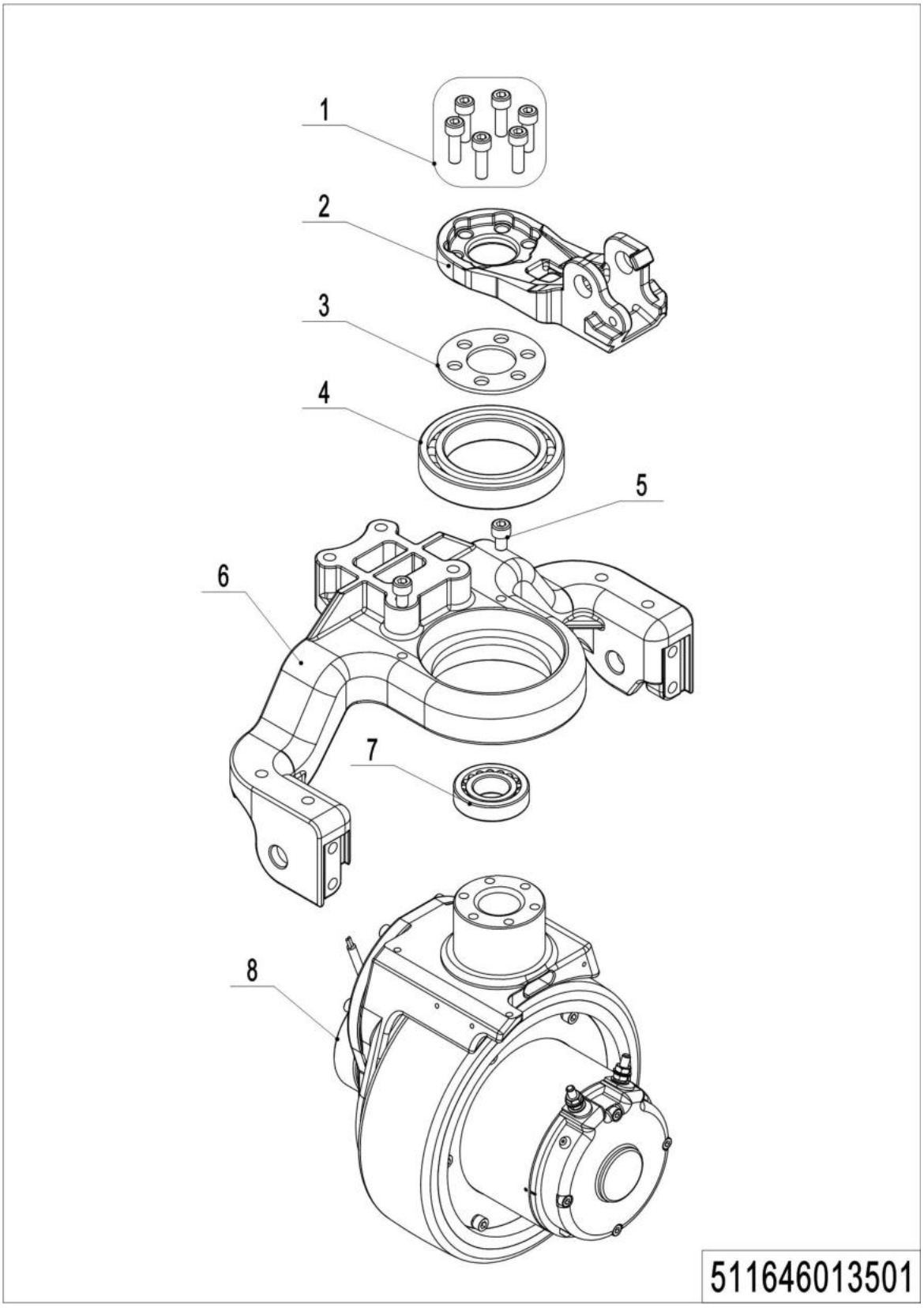

01 Drive Unit Steering(511646013501)

No.	Item Code	Mark	Item Description	Qty.	Substitute	Note
1	910200200058	1	Screw	6		
2	509913520004		Flange	1		
3	509913520002		Subplate	1		
4	910700200058		Bearing	1		
5	910200200074	1	Screw	2		
6	509913520006		Wheel Mount	1		
7	910700600044		Bearing	1		
8	961004800000	1	Drive Unit	1		YX

02 Drive Assembly(AZ)(511646013501)

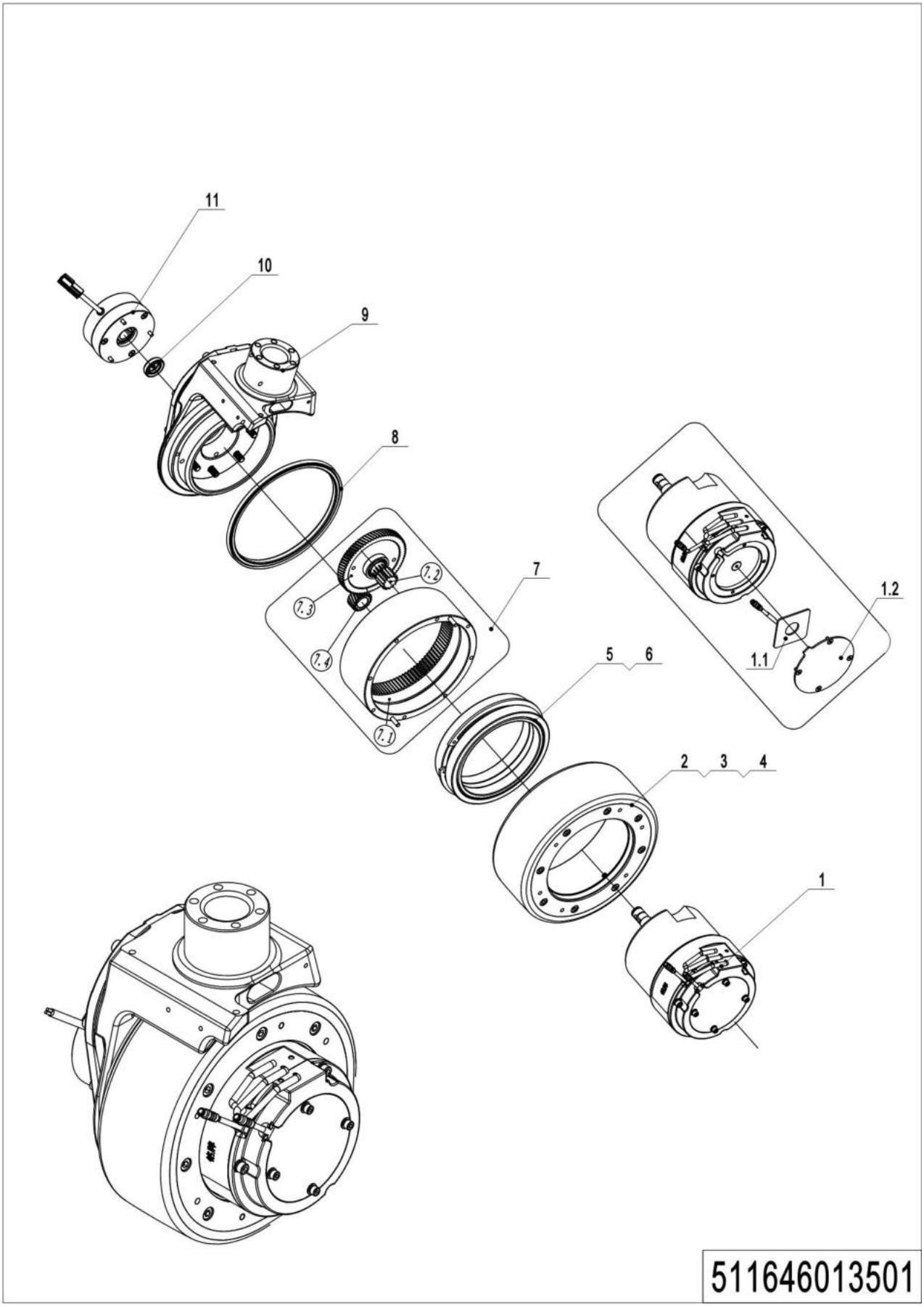

1= Supply as package. 2= Supply with constraints. 3= Phasing-out supply. 4= Supply as assembly. 5= Check other tables.

02 Drive Assembly(YX)(511646013501)

No.	Item Code	Mark	Item Description	Qty.	Substitute	Note
1	961004000012		Motor	1		
1.1	507798520023		Hall sensor	4		
1.2	507798520024		Cover	1		
2	961004000009		Wheel	1		
3	961004000011		Oil Seal	1		
4	910200200202		Screw	8		
5	910700200044		Bearing	2		
6	961004000007		Sleeve	1		
7	507798510006		Gear	1		
7.1	961004000006		Gear	1		
7.2	961004000003		Gear Shaft	1		
7.3	961004000002		Gear	1		
7.4	961004000005		Gear	1		
8	961004000010		Oil Seal	1		
9	509998510051		Gearbox	1		
10	961000700012		Oil Seal	1		
11	961002200004		Brake	1		

Chapter 2: Hydraulic System

01 Hydraulic Components(511646023502)

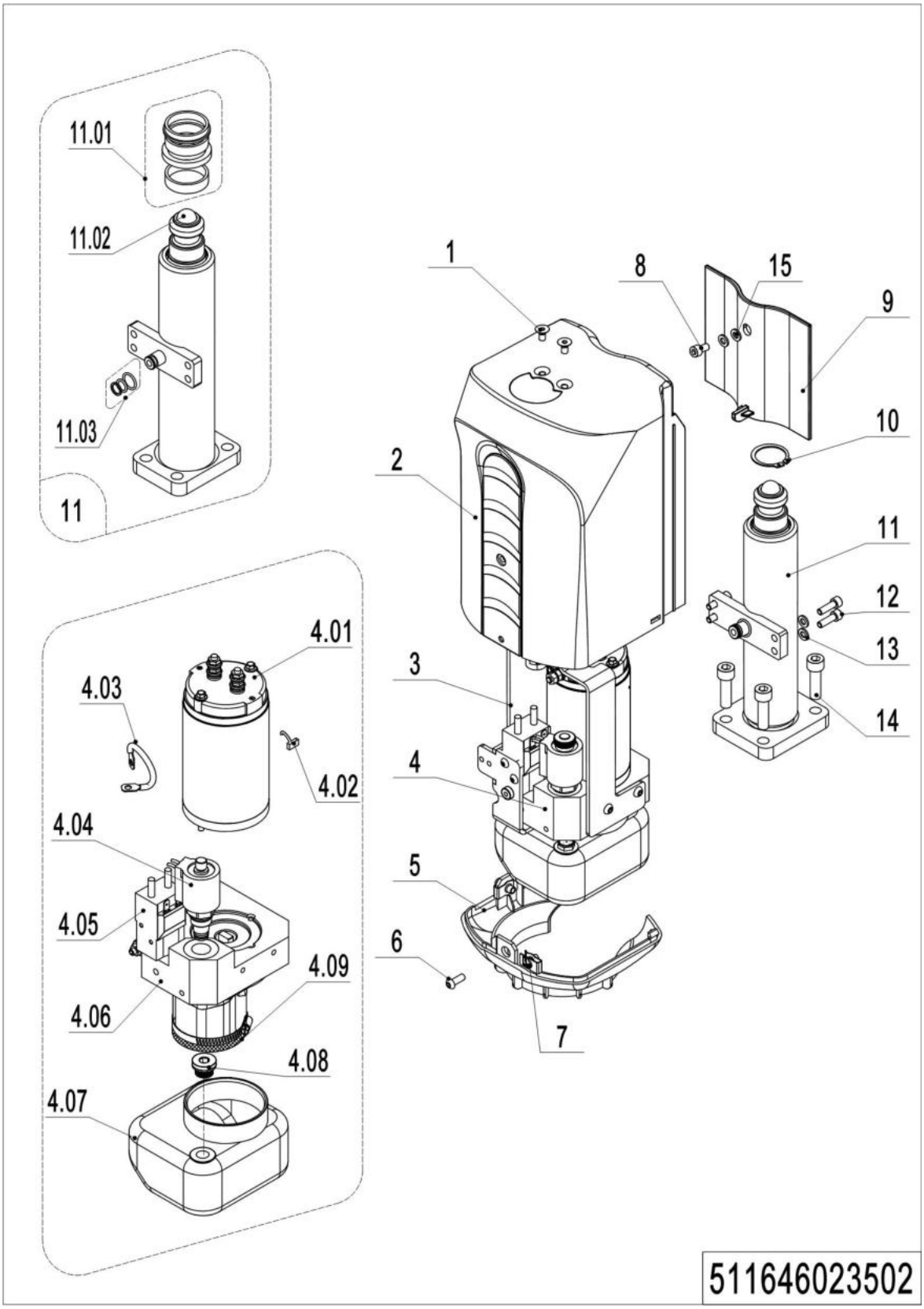

01 Hydraulic Components(511646023502)

No.	Item Code	Mark	Item Description	Qty.	Substitute	Note
1	910200400015	1	Screw	2		
2	509924020105		Cover	1		
3	51182401000		Mounting Rack	1		
4	950900100057	2	Pump Unit	1		
4.01	508598510007	2	Motor	1		
4.02	508598520014	2	Brush	1		
4.03	508598520001	2	Cables	1		
4.04	505698520054	2	Magnetic Valve	1		
4.05	508598520011	2	Switch	1		
4.06	508598510008	2	Gear Pump	1		
4.07	508598510010	2	Tank	1		
4.08	508598510009	2	Filter	1		
4.09	508598520005	2	Sieve	1		
5	509924020102		Shield	1		
6	910200300018	1	Screw	5		
7	940400400001	1	Cage Nut	2		
8	910200200176	1	Screw	1		
9	509924020103		Cover	1		
10	910401300017		Circlip	1		
11	511624010001		Cylinder	1		
11.01	509924010005		Seal Kit	1		
11.02	910701100019		Steel Ball	1		
11.03	508598510004		Seal Kit	1		
12	910200200036	1	Screw	4		
13	910400100005	1	Flat Washer	4		
14	910200200075	1	Screw	4		
15	509938520042	1	Spring Washer	2		

1= Supply as package. 2= Supply with constraints. 3= Phasing-out supply. 4= Supply as assembly. 5= Check other tables.

Chapter 3: Truck Frame

01 Truck Frame (511846038501)

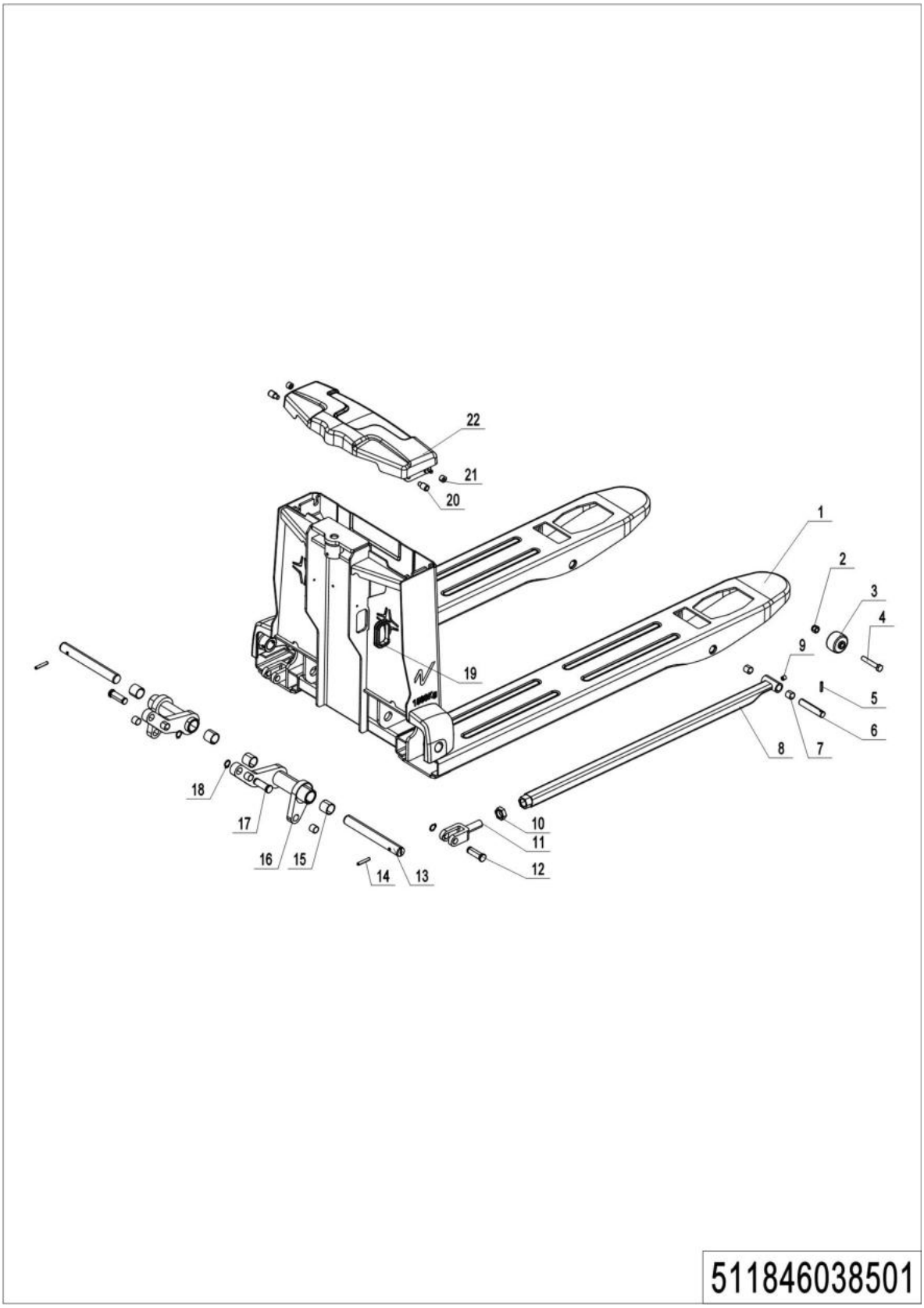

01 Truck Frame (511846038501)

No.	Item Code	Mark	Item Description	Qty.	Substitute	Note
1	511838510001		Chassis(685x1150)	1		
2	910300500005		Nut	2		
3	505638520039		Entry roller	2		
4	941100200019		Nut	1		
5	910600500002		Coiled Elastic Cylinder	4		
6	502338520030		Axle	2		
7	940500100083		Bushing	8		
8	509938510002		Push Rod Kit(1150)	2		
9	911200100001		Oil Cup	2		
10	910300400008		Nut	2		
11	502338520027		Push Rod Fork	2		
12	502338520026		Pin	4		
13	510838520104		Axle	2		
14	910600400041		Spring Pin	2		
15	940500100097		Bushing	4		
16	510838510004		Rise Arm	1		
17	910401300007		Circlip	4		
18	510838510005		Rise Arm	1		
19	509938520041		Jacket	1		
20	505621020003		Damping	2		
21	505621020004		Cushion	2		
22	511838510002		Weld	1		

02 Truck Frame (511846038502)

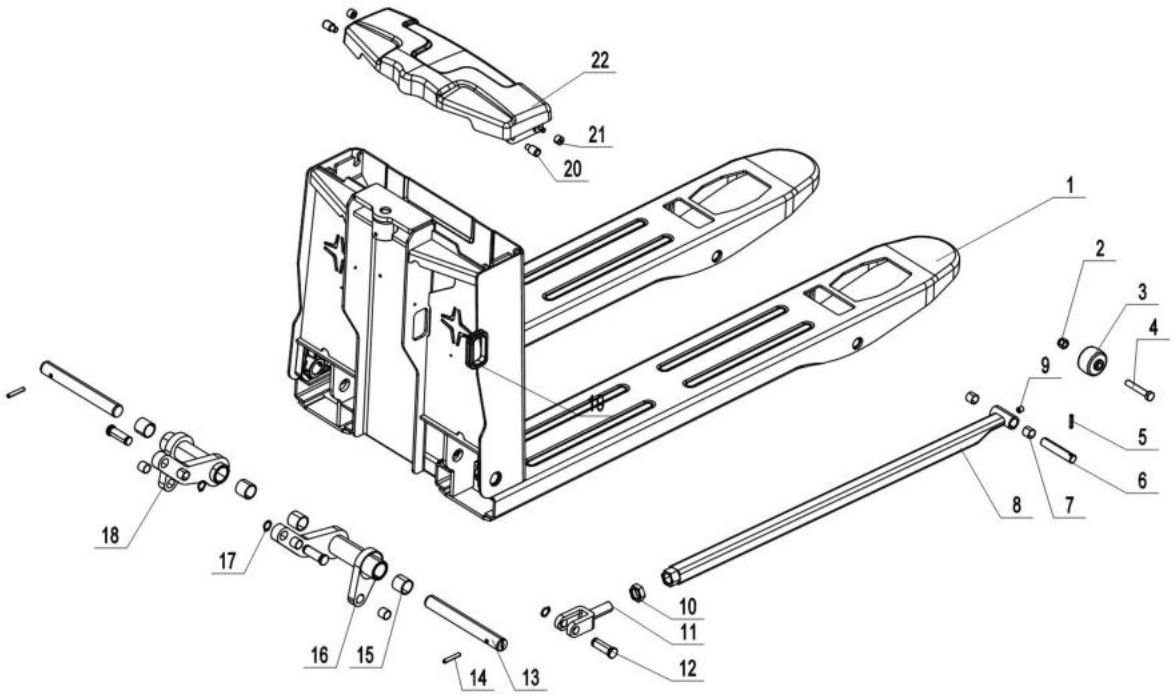

511846038502

02 Truck Frame (511846038502)

No.	Item Code	Mark	Item Description	Qty.	Substitute	Note
1	511838510000		Chassis(540x1150)	1		
2	910300500005		Nut	2		
3	505638520039		Entry roller	2		
4	941100200019		Nut	1		
5	910600500002		Coiled Elastic Cylinder	4		
6	502338520030		Axle	2		
7	940500100083		Bushing	8		
8	509938510002		Push Rod Kit(1150)	2		
9	911200100001		Oil Cup	2		
10	910300400008		Nut	2		
11	502338520027		Push Rod Fork	2		
12	502338520026		Pin	4		
13	511838520019		Axle	2		
14	910600400041		Spring Pin	2		
15	940500100097		Bushing	4		
16	510838510002		Rise Arm	1		
17	910401300007		Circlip	4		
18	510838510003		Rise Arm	1		
19	509938520041		Jacket	1		
20	505621020003		Damping	2		
21	505621020004		Cushion	2		
22	511838510002		Weld	1		

Chapter 4: Steering System, Braking System, Wheels

01 Tiller Unit(511646011001)

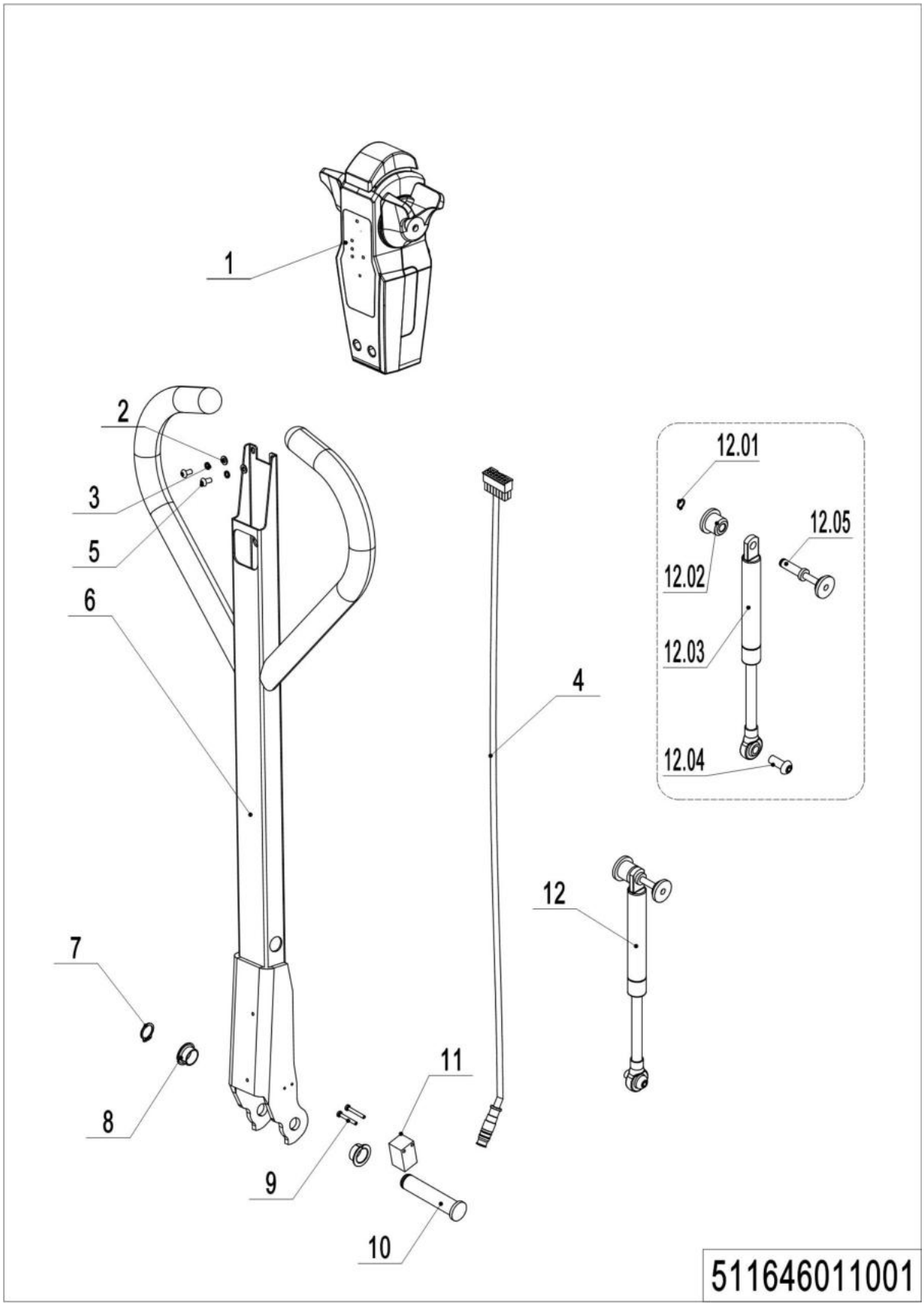

1= Supply as package. 2= Supply with constraints. 3= Phasing-out supply. 4= Supply as assembly. 5= Check other tables.

01 Tiller Unit(511646011001)

No.	Item Code	Mark	Item Description	Qty.	Substitute	Note
1	922100100285	2	Tiller	1		
2	910400100004	1	Flat Washer	1		
3	910400500004	1	Spring Washer	4		
4	511833010007		Wire Harness	1		
5	910200300011	1	Screw	1		
6	511211010002		Welding of handle rod	1		
7	910401300006	1	Circlip	1		
8	940500200001		Bushing	2		
9	941101100001	1	Screw	2		
10	508011020004		Pin	1		
11	920200400026		Proximity Switch	1		
12	508098510084		Gas Spring Kit	1		
12.1	910401300001	1	Circlip	1		
12.2	508011020005		Fixing Base	1		
12.3	508011010001		Gas Spring	1		
12.4	941100100011	1	Screw	1		
12.5	508011010002		Pin	1		

02 Tiller(511646011002)

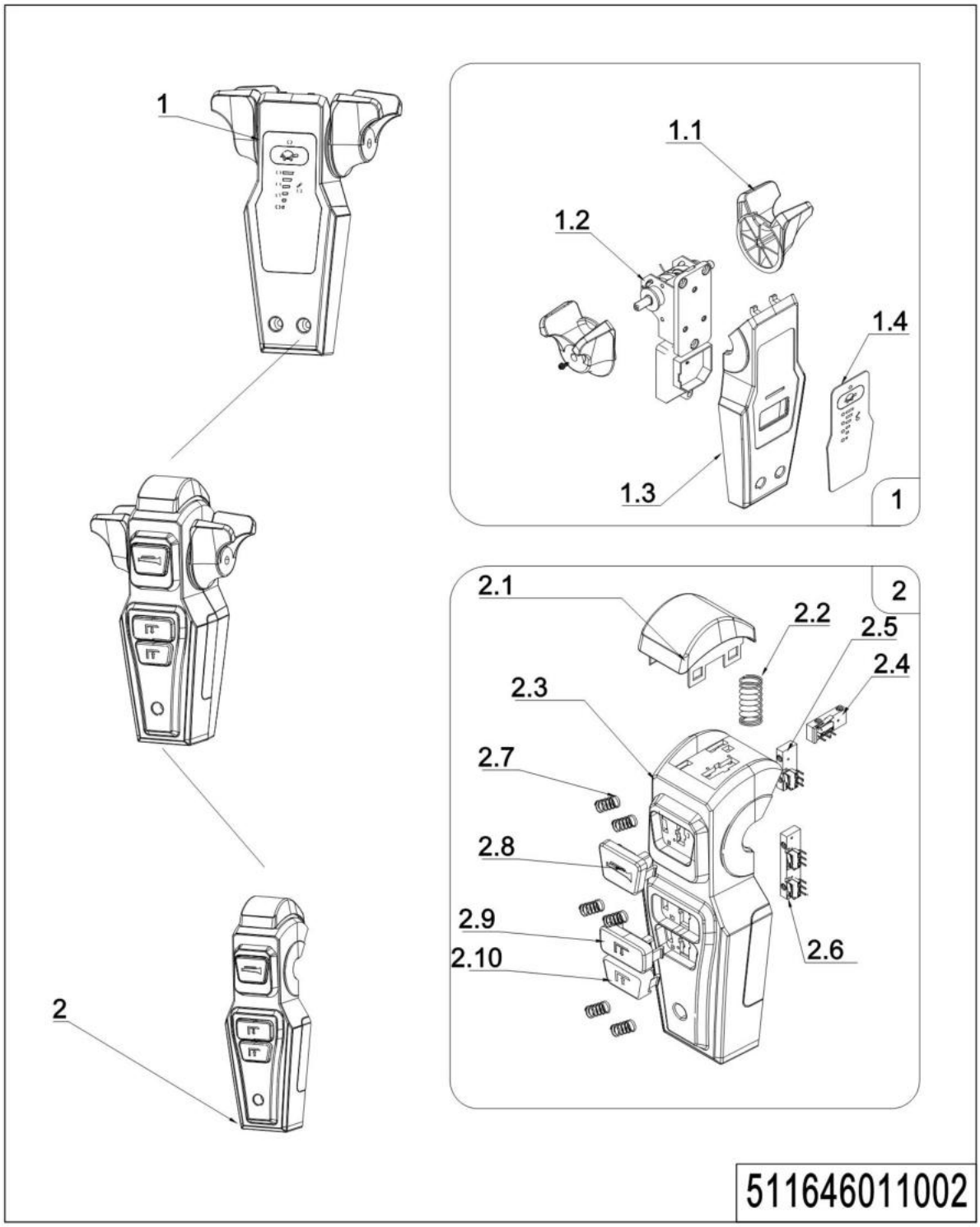

02 Tiller(511646011002)

No.	Item Code	Mark	Item Description	Qty.	Substitute	Note
1	511898510001		Accelerator	1		
1.1	511898520014		Dial Key	2		
1.2	511898520002		Circuit Board Assembly	1		
1.3	511898520003		Cover	1		
2	511898510002		Control Handle body	1		
2.1	511898520004		Button Cap	1		
2.2	511898520005		Spring	1		
2.3	511898520006		Cover	1		
2.4	511898520007		Wire Harness	1		
2.5	511898520008		Wire Harness	1		
2.6	511898520009		Wire Harness	1		
2.7	511898520010		Spring	6		
2.8	511898520011		Button Cap	1		
2.9	511898520012		Button Cap	1		
2.10	511898520013		Button Cap	1		

03 Load Wheel (Tandem)(511846017001)

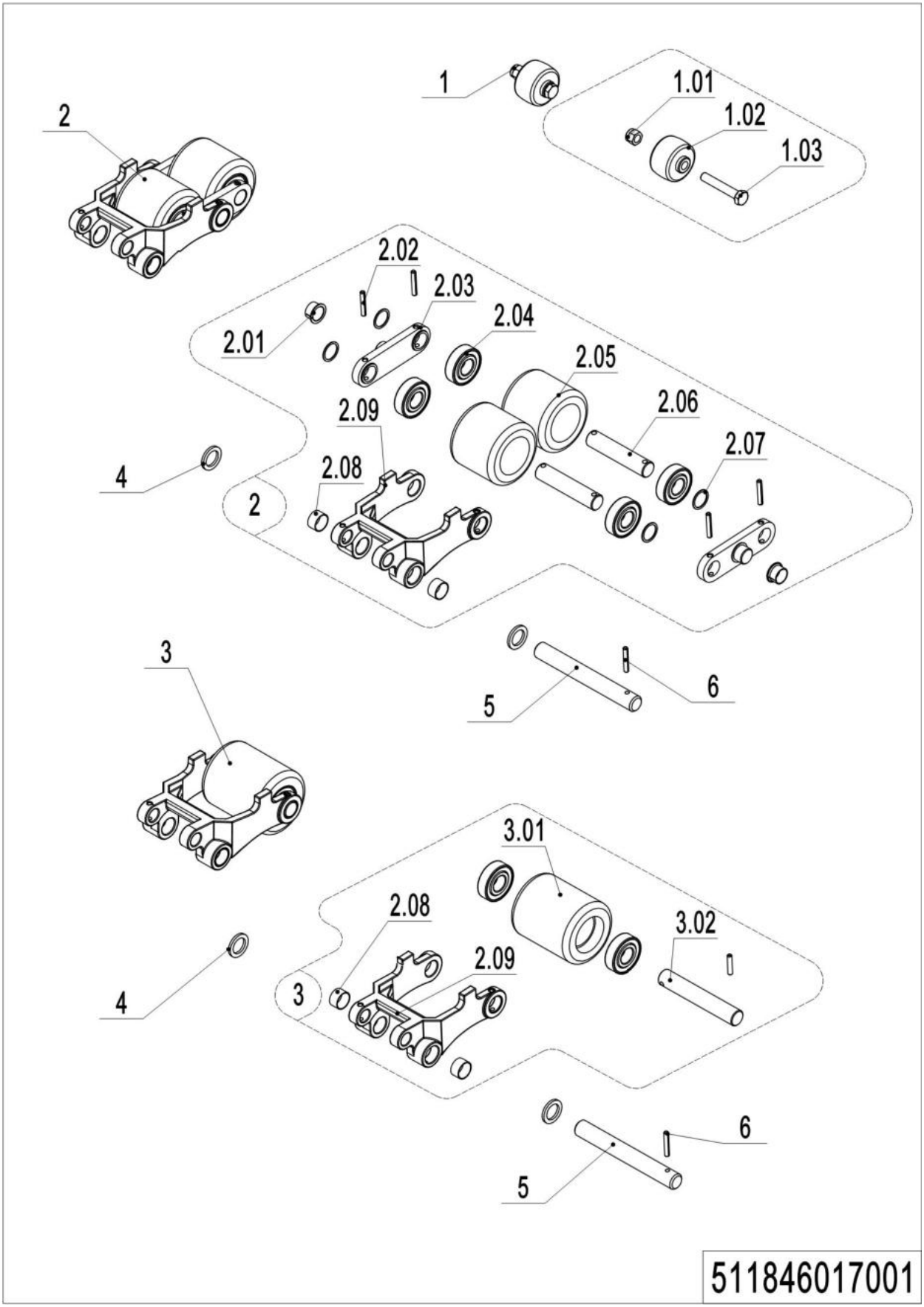

1= Supply as package. 2= Supply with constraints. 3= Phasing-out supply. 4= Supply as assembly. 5= Check other tables.

03 Load Wheel (Tandem)(511846017001)

No.	Item Code	Mark	Item Description	Qty.	Substitute	Note
1	502398510003		Pulley components	2		
1.01	910300500005	1	Nut	2		
1.02	505638520039		Running Pulley	2		
1.03	941100200019	1	Bolt	2		
2	511817001000		Wheel	2		
2.01	940500200038		Bushing	4		
2.02	910600400027	1	Spring Pin	8		
2.03	508017020001		Plate	4		
2.04	910700200019		Bearing	8/4		
2.05	511817020002		WheelΦ80x70	4		
2.06	511817020001		Axle	4		
2.07	940600500013		Washer	8/4		double /Single
2.08	940500100088		Bushing	4		
2.09	511838520017		Riser	2		
3	511817001001	2	Wheel	2		
3.01	511817020004		WheelΦ80x93	2		
3.02	511817020003		Axle	2		
4	502338520033		Roller	4		
5	502338520031		Pin	2		
6	910600400025		Spring Pin	2		

04 Caster (509946016504)

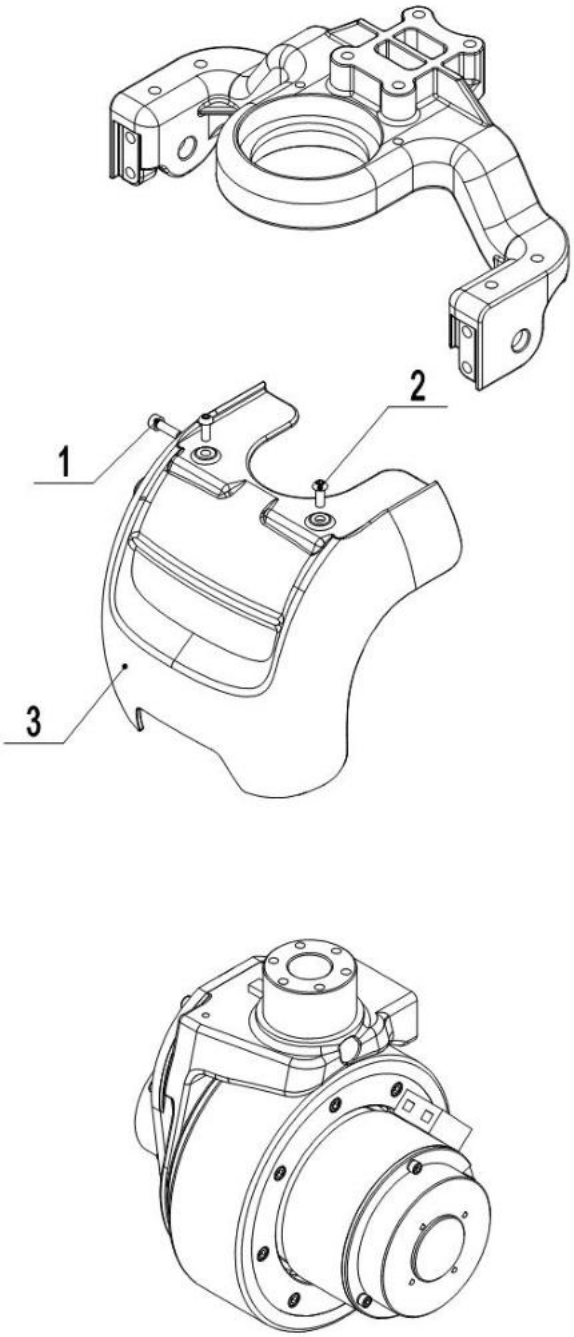

509946016504

1= Supply as package. 2= Supply with constraints. 3= Phasing-out supply. 4= Supply as assembly. 5= Check other tables.

04 Caster (509946016504)

No.	Item Code	Mark	Item Description	Qty.	Substitute	Note
1	910200200036	1	Screw	1		
2	910200300019	1	Screw	2		
3	509916520002		Apron	1		

Chapter 5: Electrical Parts

01 Wire Harness (511646033001)

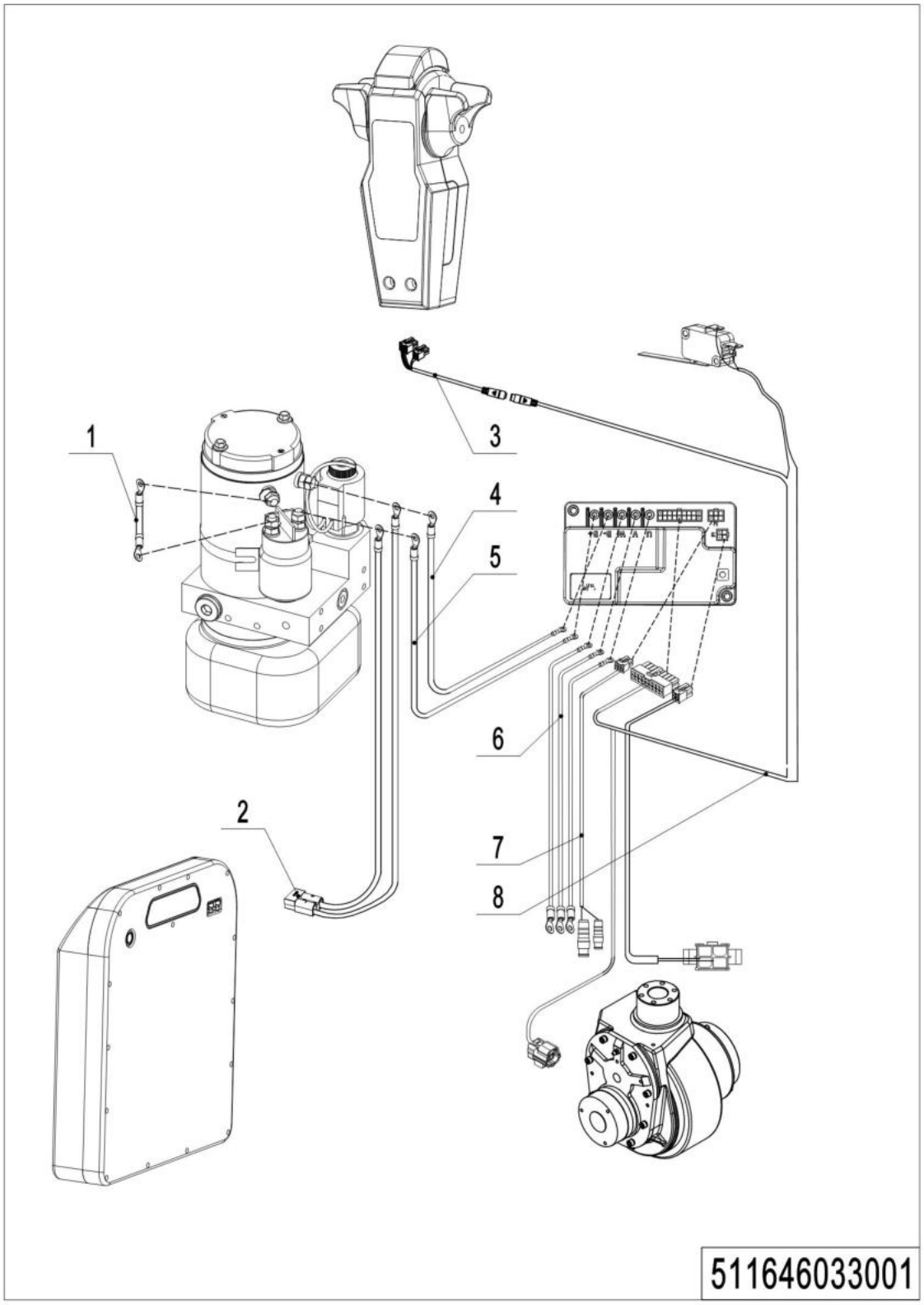

1= Supply as package. 2= Supply with constraints. 3= Phasing-out supply. 4= Supply as assembly. 5= Check other tables.

01 Wire Harness (511646033001)

No.	Item Code	Mark	Item Description	Qty.	Substitute	Note
1	509933010012		Cables	1		
2	511633010007		Wire Harness	1		
3	511833010007		Wire Harness	1		
4	511633010003		Cables	1		B-
5	511633010002		Cables	1		B+
6	511633010004		Wire Harness	1		
7	511633010005		Wire Harness	1		
8	511633010001		Wire Harness	1		

02 Electronic components (511646033002)

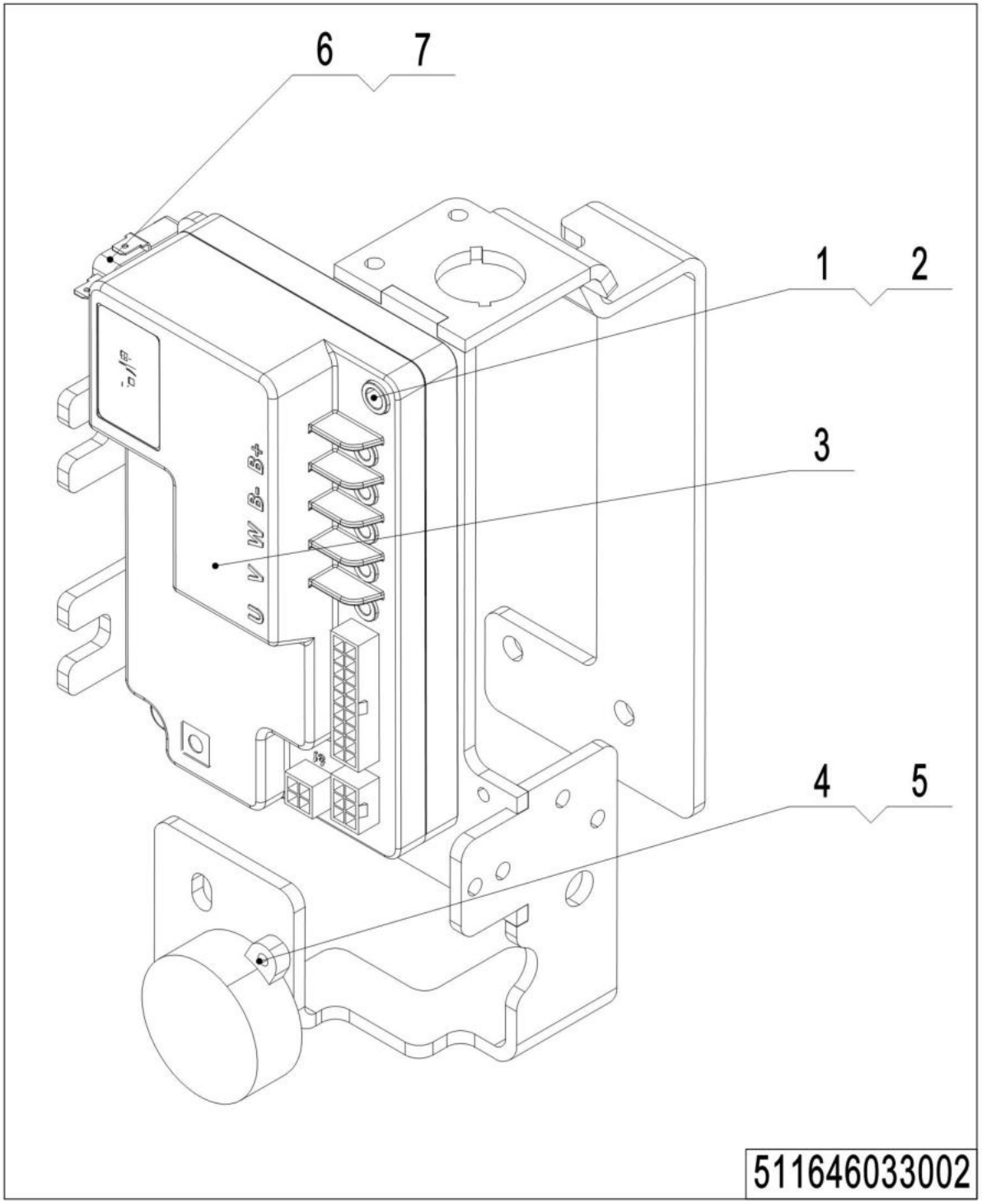

1= Supply as package. 2= Supply with constraints. 3= Phasing-out supply. 4= Supply as assembly. 5= Check other tables.

02 Controller (511646033002)

No.	Item Code	Mark	Item Description	Qty.	Substitute	Note
1	910200200025	1	Screw	2		
2	910400500004	1	Spring Washer			
3	961004500016		Controller	1		
4	910200300002	1	Screw	2		
5	509998520063		Horn	1		
6	910200200004	1	Screw	2		
7	920200300012		Microswitch	1		

03 Charger (511646036501)

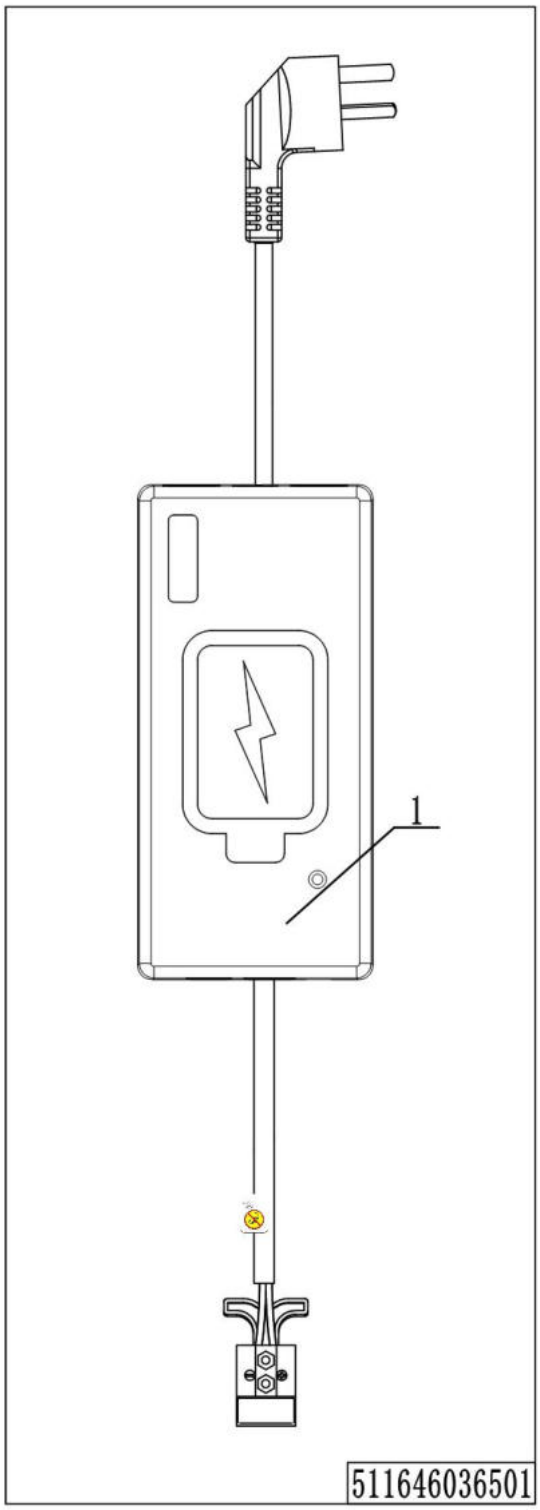

1= Supply as package. 2= Supply with constraints. 3= Phasing-out supply. 4= Supply as assembly. 5= Check other tables.

03 Charger (511646036501)

No.	Item Code	Mark	Item Description	Qty.	Substitute	Note
1	921000201011		Charger 48V5A (Aisa-CHN)	1		SW
1	921000201012		Charger 48V5A (Aisa-ENG)	1		SW
1	921000201013		Charger 48V5A (EU)	1		SW
1	921000201095		Charger 48V5A (US)	1		SW

04 Traction Battery (511646037001)

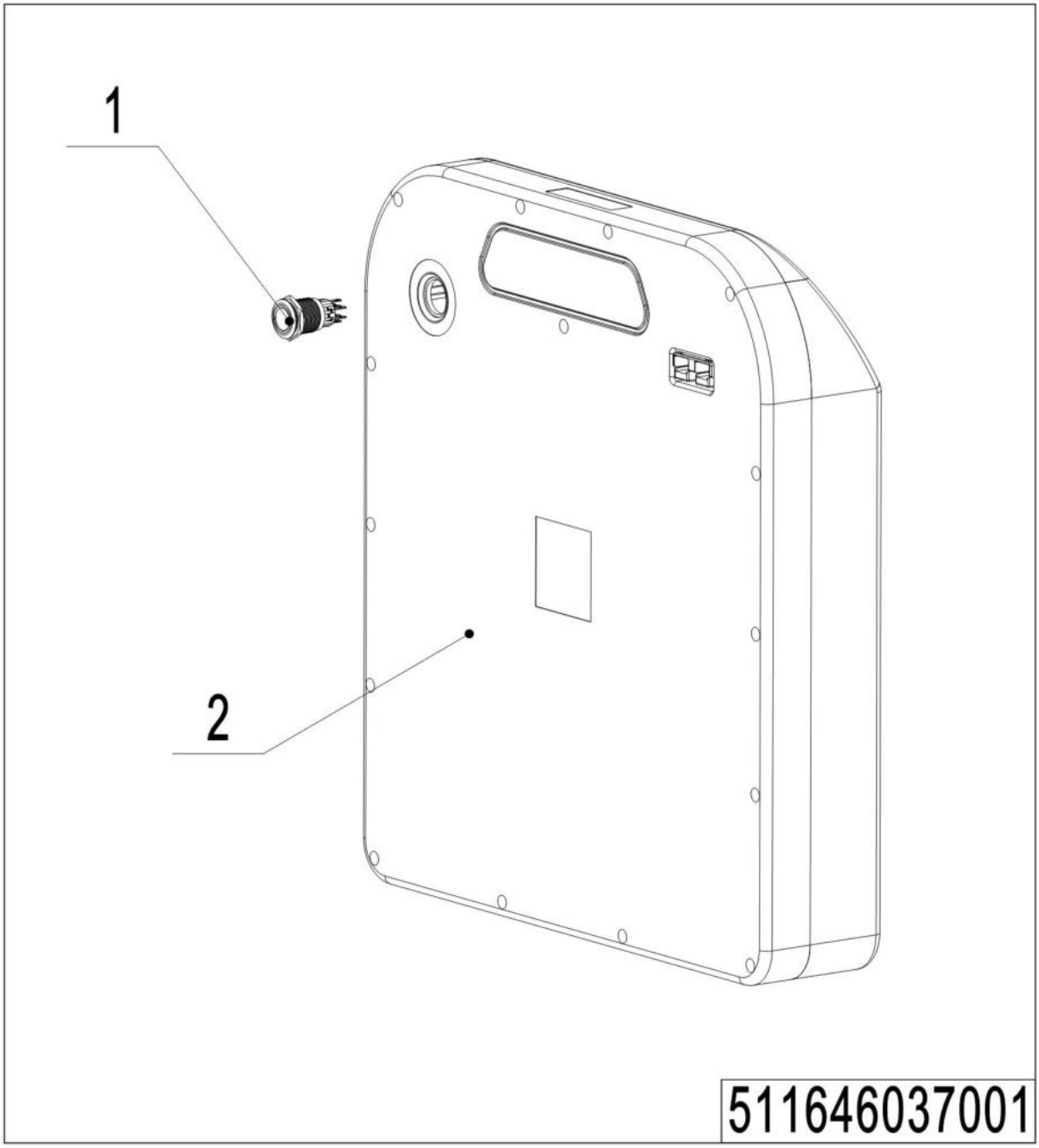

1= Supply as package. 2= Supply with constraints. 3= Phasing-out supply. 4= Supply as assembly. 5= Check other tables.

04 Traction Battery (511646037001)

No.	Item Code	Mark	Item Description	Qty.	Substitute	Note
1	921500200023		Metal Switch	1		
2	920600100872		Li Battery48V10Ah	1		
2	920600100774		Li Battery48V20Ah	1		

Chapter 6: Others

01 Labels and Decals-EU (511846047003)

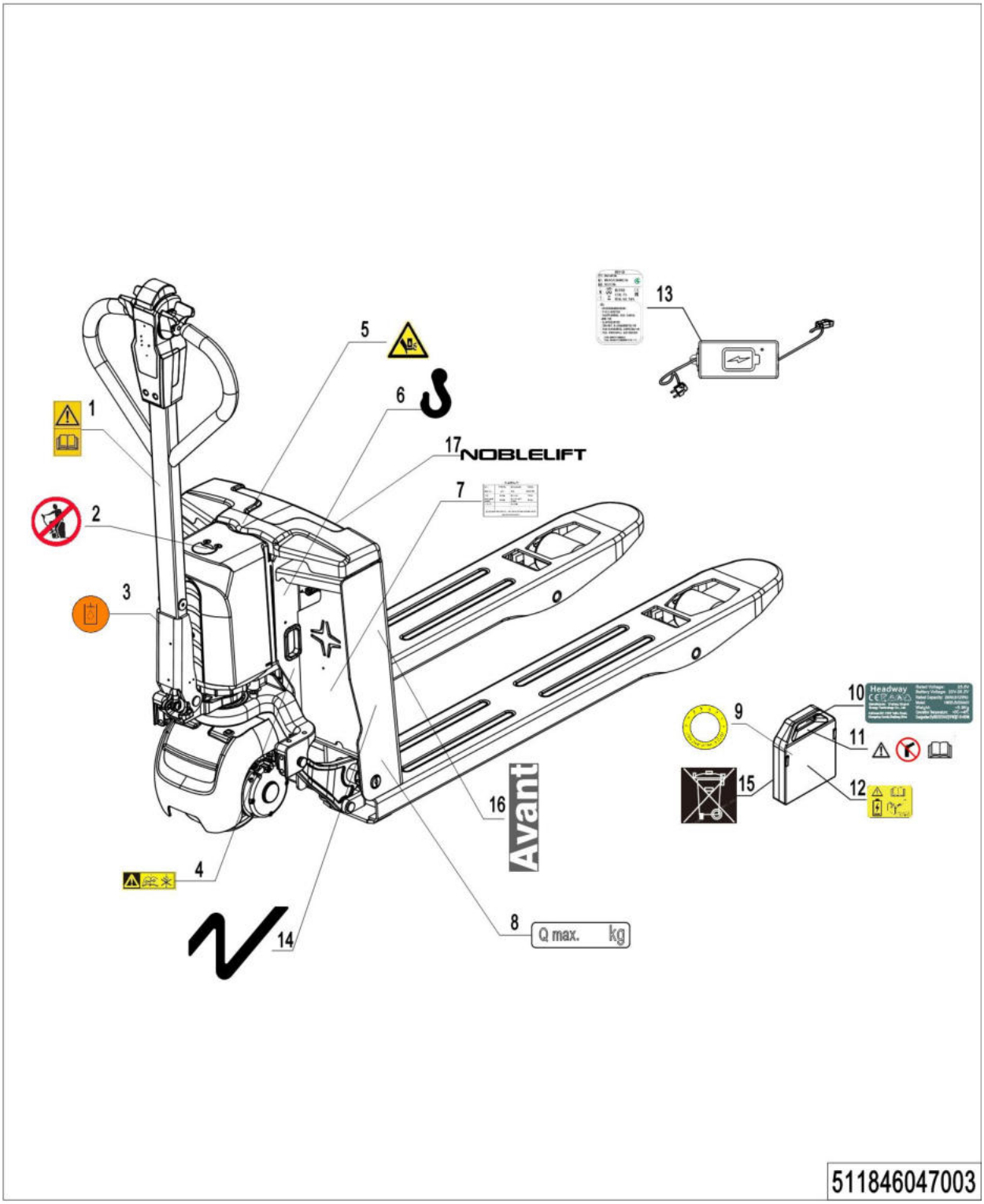

1= Supply as package. 2= Supply with constraints. 3= Phasing-out supply. 4= Supply as assembly. 5= Check other tables.

01 Labels and Decals-EU (511846047003)

No.	Item Code	Mark	Item Description	Qty.	Substitute	Note
1	941200300002		Label	1		
2	941200100003		Label	1		
3	941200300003		Label	1		
4	941200200009		Label	2		
5	508047020007		Label	1		
6	941200300001		Label	2		
7	509947520000		Truck data plate	1		
8	941200200009		Label	2		
9	509947020002		Label	1		
10	509947020003		Label	1		
11	508047020002		Label	1		
12	509947020004		Label	1		
13	509947020005		Label	1		
14	510847020003		Lable	2		
15	508047020015		Label	1		

02 Labels and Decals-US (511846047004)

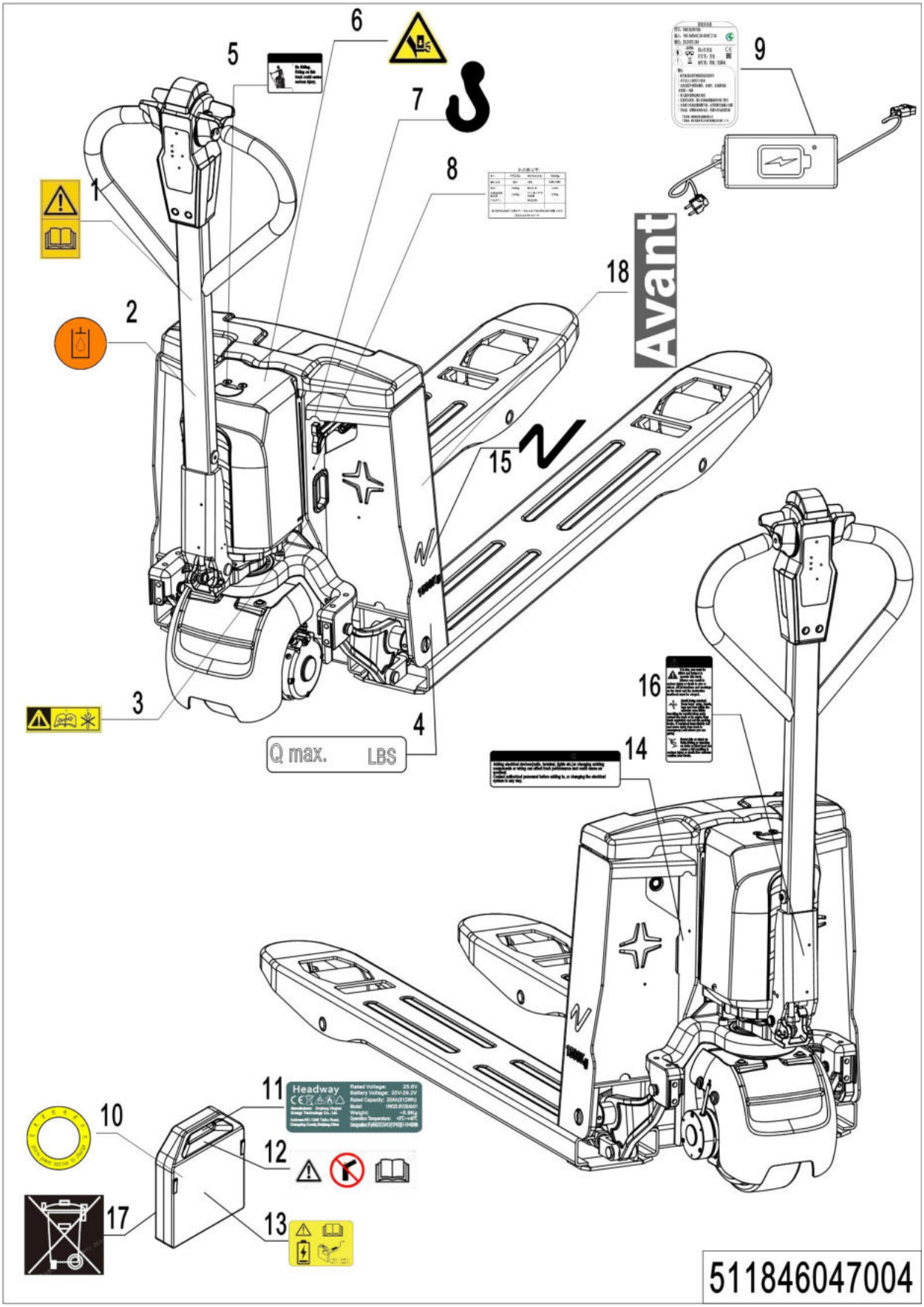

02 Labels and Decals-US(511846047004)

No.	Item Code	Mark	Item Description	Qty.	Substitute	Note
1	941200300002		Label	1		
2	941200300003		Label	1		
3	510847020004		Label	1		
5	941200200009		Label	2		
6	941200100011		Label	1		
7	508047020007		Label	1		
8	941200300001		Label	2		
9	509947520000		Truck data plate	1		
10	509947020005		Lable	1		
11	509947020002		Label	1		
12	509947020003		Label	1		
13	508047020002		Label	1		
14	509947020004		Label	1		
15	941200100010		Label	1		
16	510847020003		Label	2		
17	941200100009		Label	1		
18	508047020015		Label	1		

Appendix

01 Electrical Circuit Diagram (511646045501)

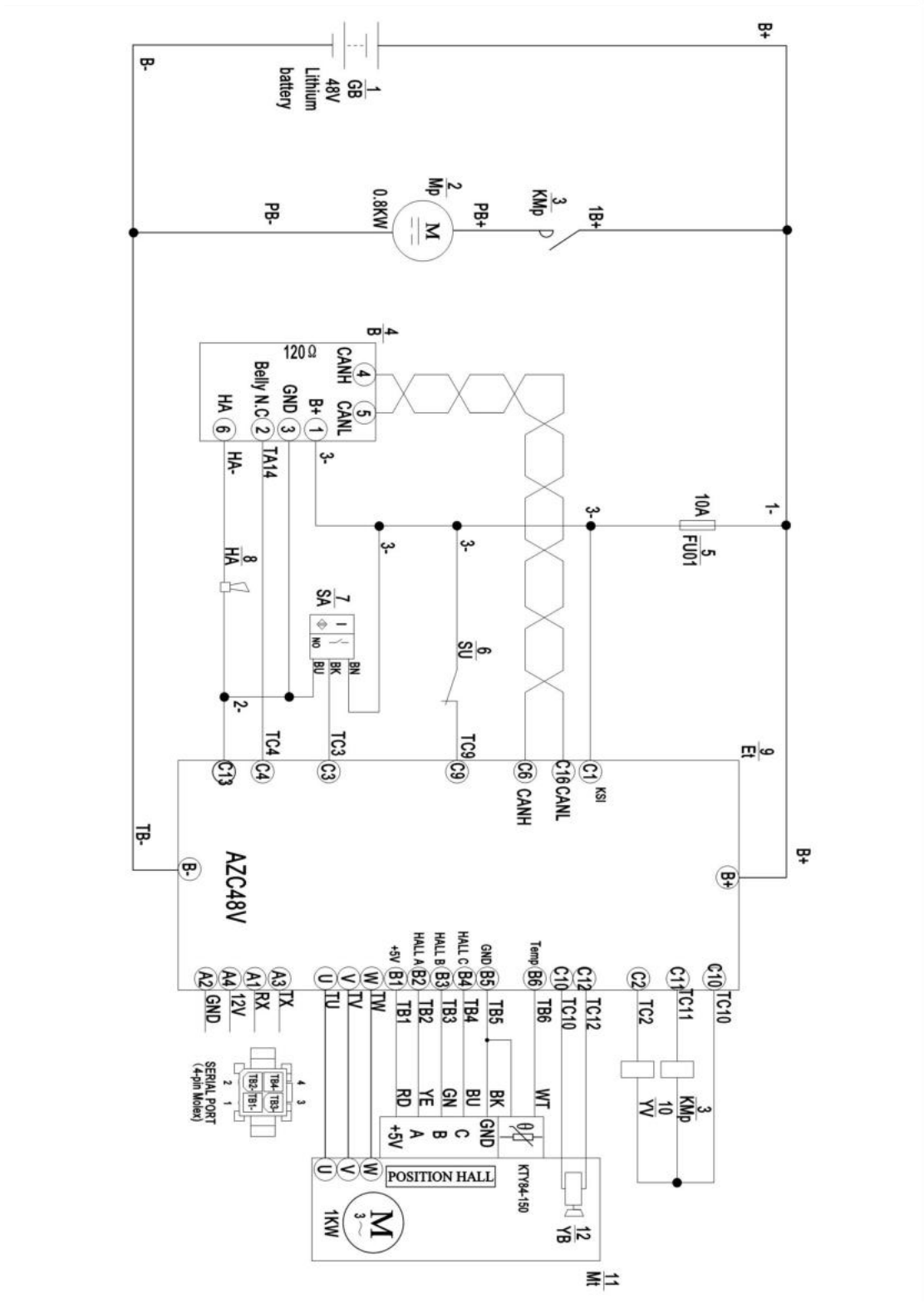

02 Electrical Circuit Diagram (508046045502)

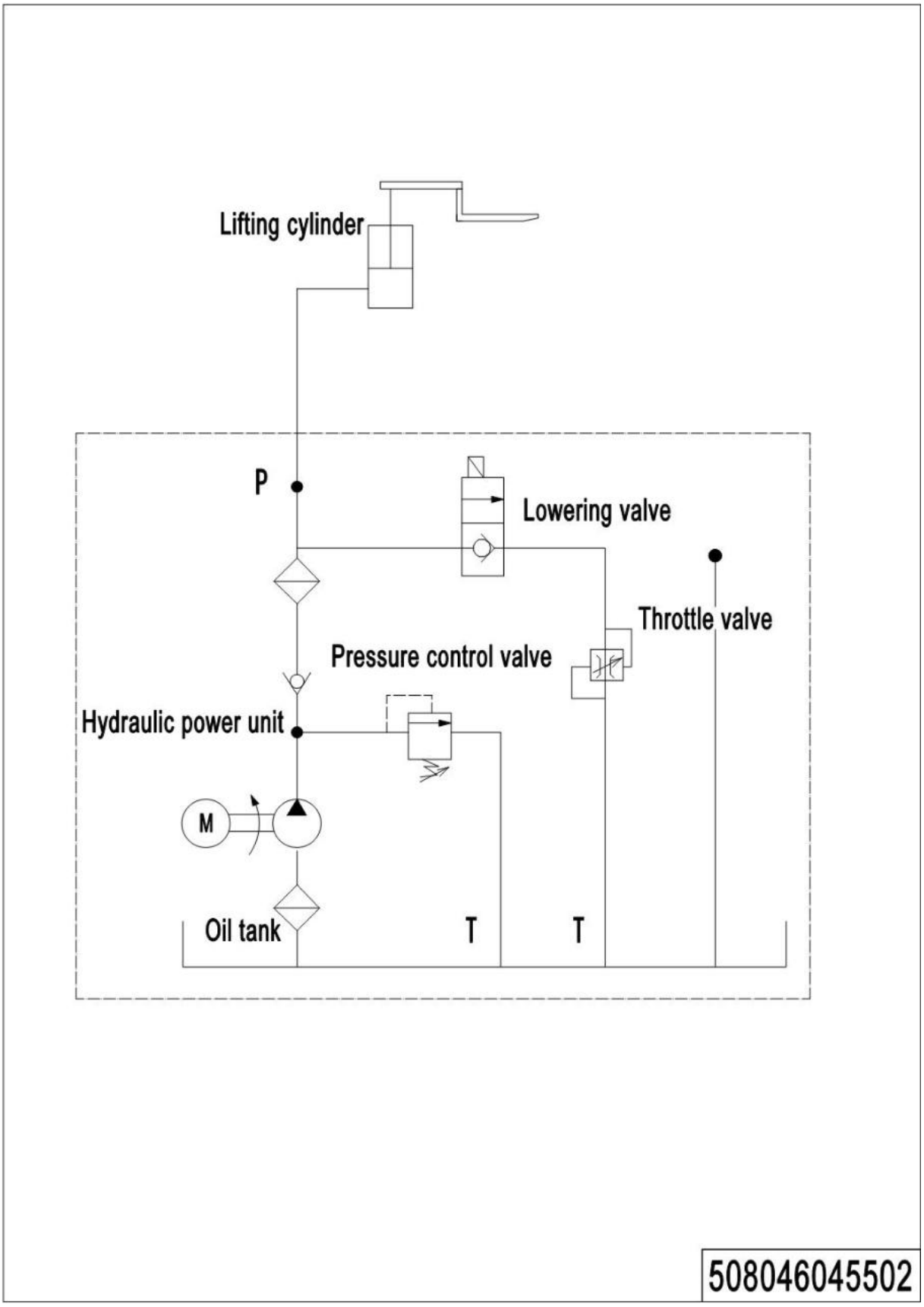

1= Supply as package. 2= Supply with constraints. 3= Phasing-out supply. 4= Supply as assembly. 5= Check other tables.

03 Consumable Parts List

No.	Item Code	Item Description	Qty.	Chapter/ Section/ Number
1	910700200058	Bearing	1	Chapter 1/01/4
2	910700600044	Bearing	1	Chapter 1/01/7
3	509924010005	Seal Kit	1	Chapter 2/01/11.01
4	508598510004	Seal Kit	1	Chapter 2/01/11.03
5	940500100097	Bushing	2	Chapter 3/01/15 Chapter 2/02/15
6	940500100083	Bushing	8	Chapter 3/01/7 Chapter 2/02/7
7	940500200001	Bushing	2	Chapter 4/01/06 Chapter 4/03/06
8	508098510084	Gas Spring	1	Chapter 4/01/08
9	940500200038	Bushing	4	Chapter 4/01/12
10	910700200019	Bearing	8/4	Chapter 4/03/2.01
11	511817020002	WheelΦ80x70	4	Chapter 4/03/2.05
12	940500100088	Bushing	4	Chapter 4/03/2.08
13	511817020004	WheelΦ80x83	2	Chapter 4/03/3.01

1= Supply as package. 2= Supply with constraints. 3= Phasing-out supply. 4= Supply as assembly. 5= Check other tables.