Print Number：　　Print Date：

NOBLELIFT

Scan QR Code for More

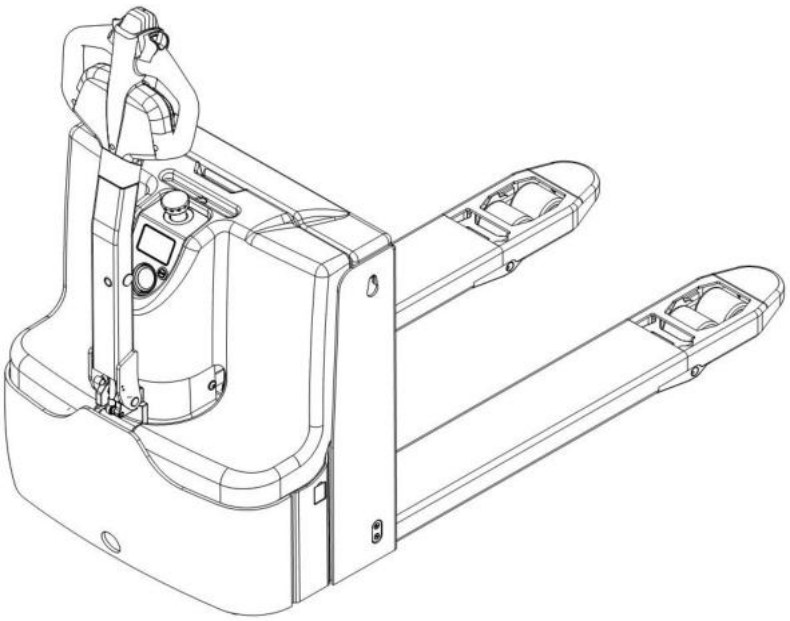

Electric Pallet Truck PT16L-Li

PARTS MANUAL

504646020102

Version：V02

Truck Identification Number From：

Parts Manual

PT16L-Li-PM02EN

Please order spare parts from authorized dealers of Noblelift Intelligent Equipment Co., LTD.

In order to avoid wrong delivery, all the orders for spare parts should specify the following items:

- Truck model, identification number and manufacture year.
- Orders for spare parts of mast, hydraulic transmission unit, steering axle, motor, etc. shall indicate the manufacture number of these parts.
- Codes for Noblelift spare parts are shown in the table of parts manual. Please also pay attention to the description of supply status, order quantity, etc. (check the number listed in "Mark" column of the parts manual).

"Mark" Column:

The unmarked indicates the parts are in short supply cycle.

Number 1: supply as package. Indicating these that parts are small parts and seal parts, which are supplied in package unit and in short supply cycle.

Number 2: supply with constraints. Indicating that these spare parts are not in stock and will be prepared for production after receiving the order from customers, which are in long supply cycle.

Number 3: phasing-out supply. Indicating that these parts will be replaced by new parts due to technical improvements and the current stock will not be available when these parts run out. Please check the description of technical improvements notice.

Number 4: supply as assembly. Indicating that these parts are assembly parts defined by manufacture process, which cannot be supplied as a single part.

Number 5: check other tables.

This parts manual is the property of Noblelift and can be shared under the confidential agreement only, Noblelift has the right to claim for compensation of any unauthorized use. Copy without permission is not allowed. Figures in the manual are not limited by the original design. Noblelift Intelligent Equipment Co., LTD reserves the right to improve the products for continuous technology progress.

Table of Contents

Chapter 1: Drive System....4
01 Drive Unit (504646013501)....4
02 Drive Unit (504646013502)....6
03 Drive Assembly 1.3kW (504646013502)....8
03 Drive Assembly 1.3kW (504646013502)Continuation....10
Chapter 2: Hydraulic System....12
01 Hydraulic System (504646024001)....12
02 Hydraulic Power Unit (WB) (504646024002)....14
03 Hydraulic Power Unit (YX) (504646024003)....16
Chapter 3: Truck Frame....18
01 Truck Body (504646021501)....18
01 Truck Body (504646021501) Continuation....20
02 Chassis (EU) (504646038501)....22
03 Chassis (US)(504646038502)....24
Chapter 4: Steering System, Braking System, Wheels....26
01 Tiller (504446011001)....26
02 Tiller (566546010002)....28
03 Load Wheel (Tandem) (505646017001)....30
04 Load Wheel (Single) (505646017002)....32
05 Caster (504446016501)....34
Chapter 5: Electrical Parts....36
01 Display Assembly (504646010001)....36
02 Wire Harness(F2A) (504646033001)....38
03 Wire Harness(A0E) (504646033002)....40
04 Controller(F2A) (504646033003)....42
05 Controller(A0E) (504646033004)....44
06 Charger (504646036501)....46
07 lithium battery (504646037001)....48
Chapter 6: Special Parts....50
01 Load Backrest (505646040501)....50
Chapter 7: Others....52
01 Labels and Decals (EU) (504646047002)....52
02 Labels and Decals (US) (504646047004)....54
Appendix....56
01 Electrical Circuit Diagram(F2A) (504646045501)....56
02 Electrical Circuit Diagram(A0E) (504646045502)....57
03 Hydraulic Circuit Diagram (504446045503)....58
04 Consumable Parts List....59

Chapter 1: Drive System

01 Drive Unit (504646013501)

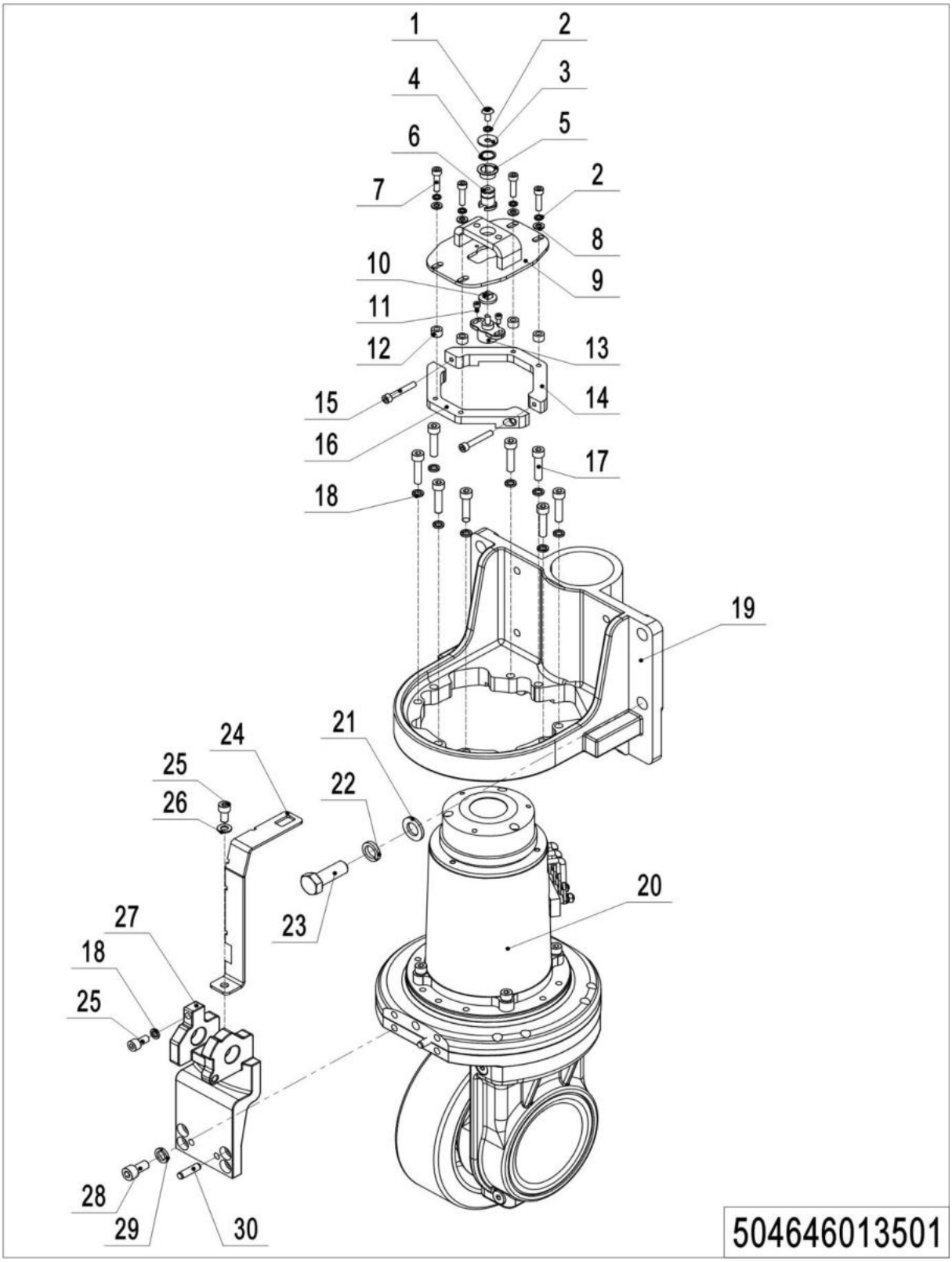

01 Drive Unit (504646013501)

No.	Item Code	Mark	Item Description	Qty.	Substitute	Note
1	910200300017		Screw	1		
2	910400500005		Spring Washer	5		
3	534813520008		Washer	1		
4	910401300006		Check Ring	1		
5	940500200001		Bushing	1		
6	534813520001		Fixed Axle	1		
7	910200200038		Screw	4		
8	910400100005		Flat Washer	4		
9	504613510000		Mounting Base	1		
10	505631520003		Link Block	1		
11	910200200012		Screw	2		
12	504613520001		Spacer	4		
13	921800200006		Sensor	1		
14	504613520003		Mounting Plate	1		
15	910200200041		Screw	1		
16	504613520002		Mounting Plate	1		
17	910200200060		Screw	8		
18	910400500006		Spring Washer	9		
19	504413520001		Wheel Mount	1		
20	940900400011		Drive Unit	1		
21	910400100010		Flat Washer	4		
22	910400500010		Spring Washer	4		
23	910100300071		Bolt	4		
24	504613520004		Rod	1		
25	910200200055		Screw	2		
26	910400100006		Flat Washer	1		
27	534813520000		Bracket	1		
28	910200200075		Screw	4		
29	910400500007		Spring Washer	4		
30	910600400044		Spring Pin	2		

02 Drive Unit (504646013502)

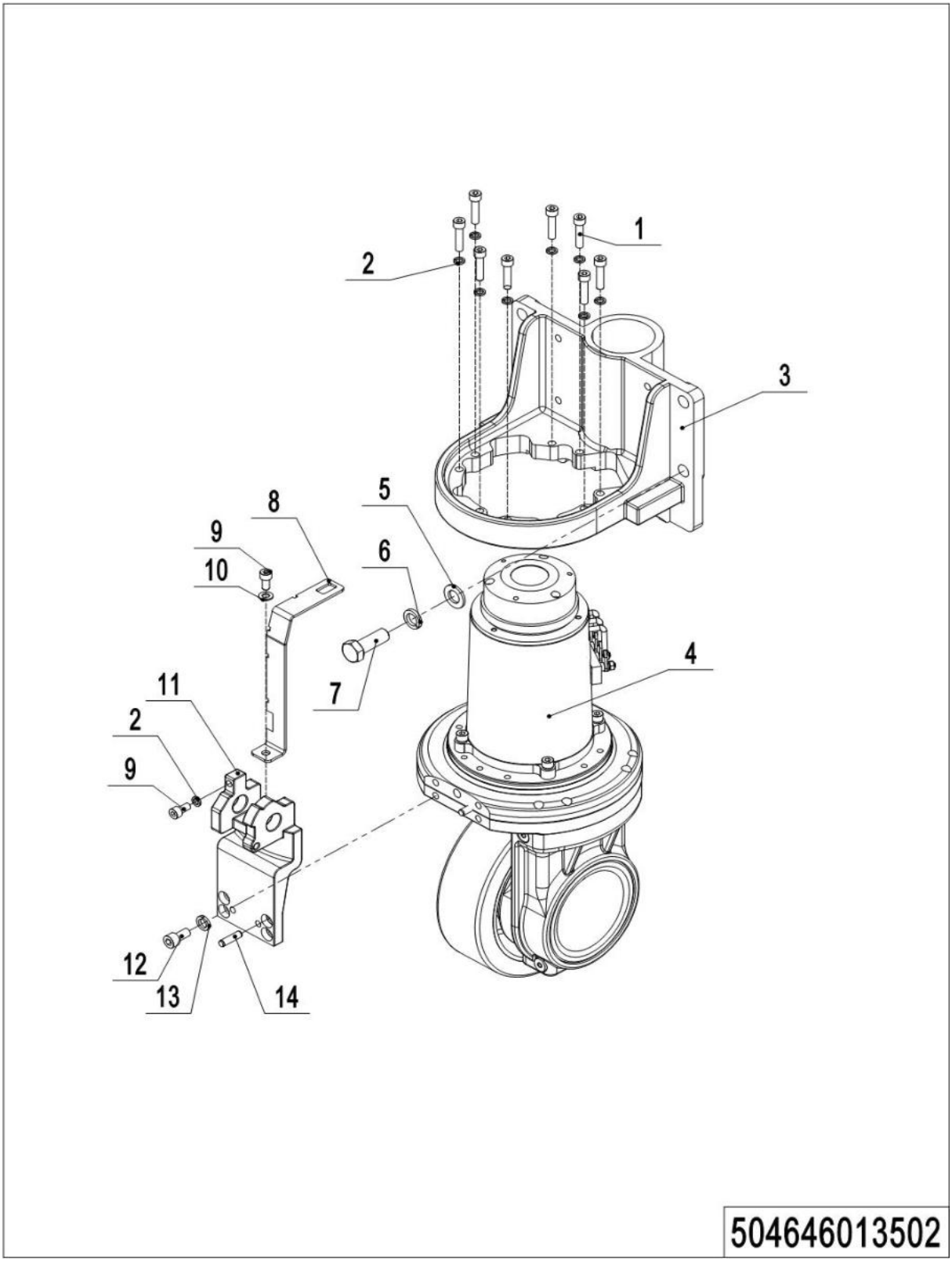

02 Drive Unit (504646013502)

No.	Item Code	Mark	Item Description	Qty.	Substitute	Note
1	910200200060		Screw	8		
2	910400500006		Spring Washer	9		
3	504413520001		Wheel Mount	1		
4	940900400011		Drive Unit	1		
5	910400100010		Flat Washer	4		
6	910400500010		Spring Washer	4		
7	910100300071		Bolt	4		
8	504613520004		Bracket	1		
9	910200200055		Screw	2		
10	910400100006		Flat Washer	1		
11	534813520000		Bracket	1		
12	910200200075		Screw	4		
13	910400500007		Spring Washer	4		
14	910600400044		Spring Pin	2		

03 Drive Assembly 1.3kW (504646013502)

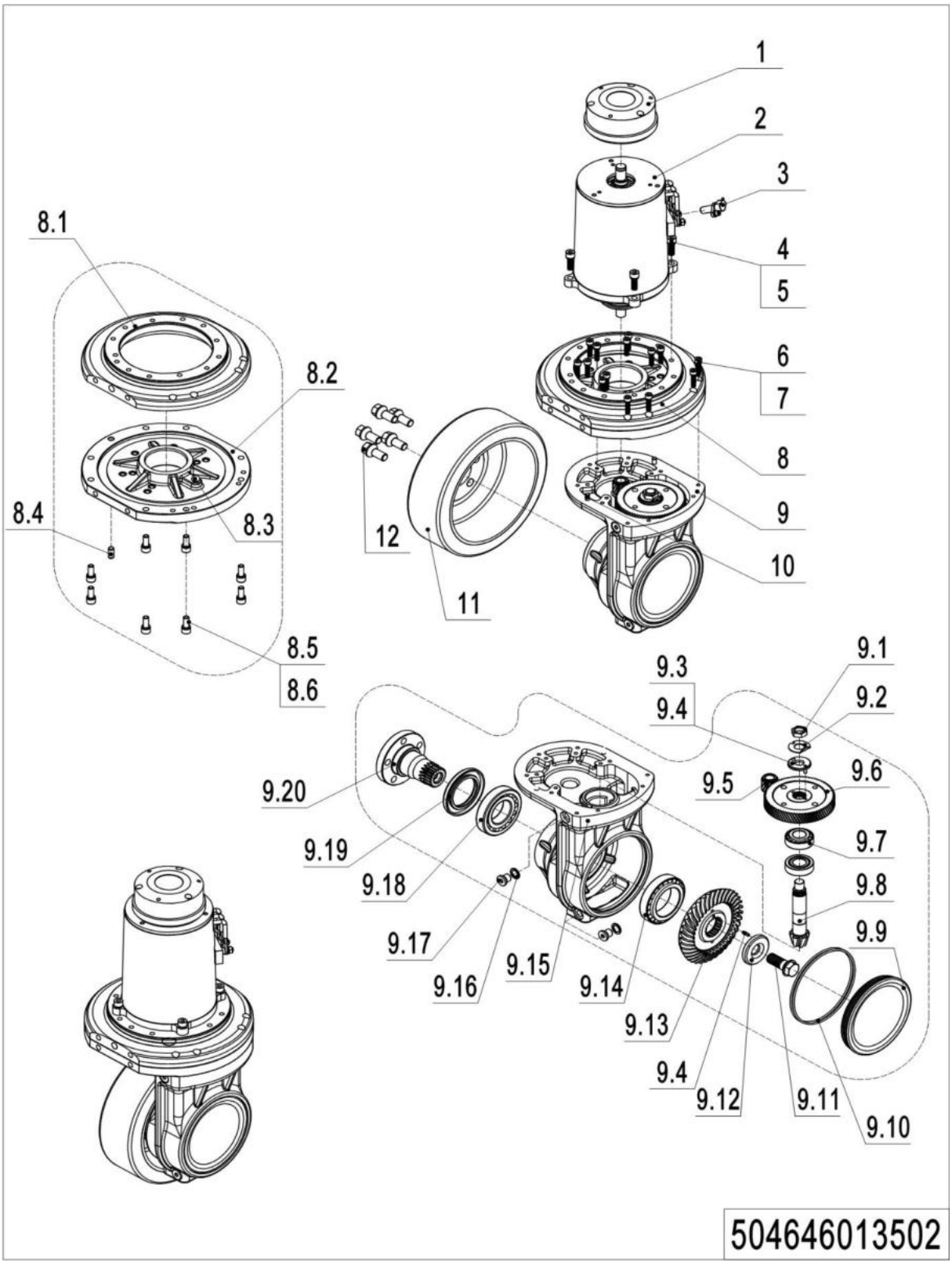

03 Drive Assembly 1.3kW (504646013502)

No.	Item Code	Mark	Item Description	Qty.	Substitute	Note
1	961000100014		Brake	1		
2	961002700008		Motor	2		AC 1.3KW
3	961002700009		Encoder	1		
4	910200200147		Screw	4		
5	910400500019		Washer	4		
6	910200200140		Screw	14		
7	910400500018		Washer	14		
8	961002701000		Slewing Bearing	1		
8.1	961002700006		Slewing Bearing	1		
8.2	961002700001		Gearbox	1		
8.3	940998510011		Filler Pug	1		
8.4	910600100025		Pin	1		
8.5	910200200180		Screw	8		
8.6	910400500018		Washer	8		
9	961002702000		Gearbox	1		
9.1	910300400014		Nut	1		
9.2	910401000005		Lock Washer	1		
9.3	940998520036		Washer	1		
9.4	910600100038		Pin	2		
9.5	961002700003		Gear	1		
9.6	961002700004		Gear	1		
9.7	910700600014		Bearing	2		
9.8	940998520019		Gear	1		
9.9	940998520018		Side Cover	1		
9.10	910800100095		O-Ring	1		
9.11	940998520028		Bolt	1		
9.12	940998520027		Check Ring	1		
9.13	940998520017		Gear	1		
9.14	910700600041		Bearing	1		

03 Drive Assembly 1.3kW (504646013502)Continuation

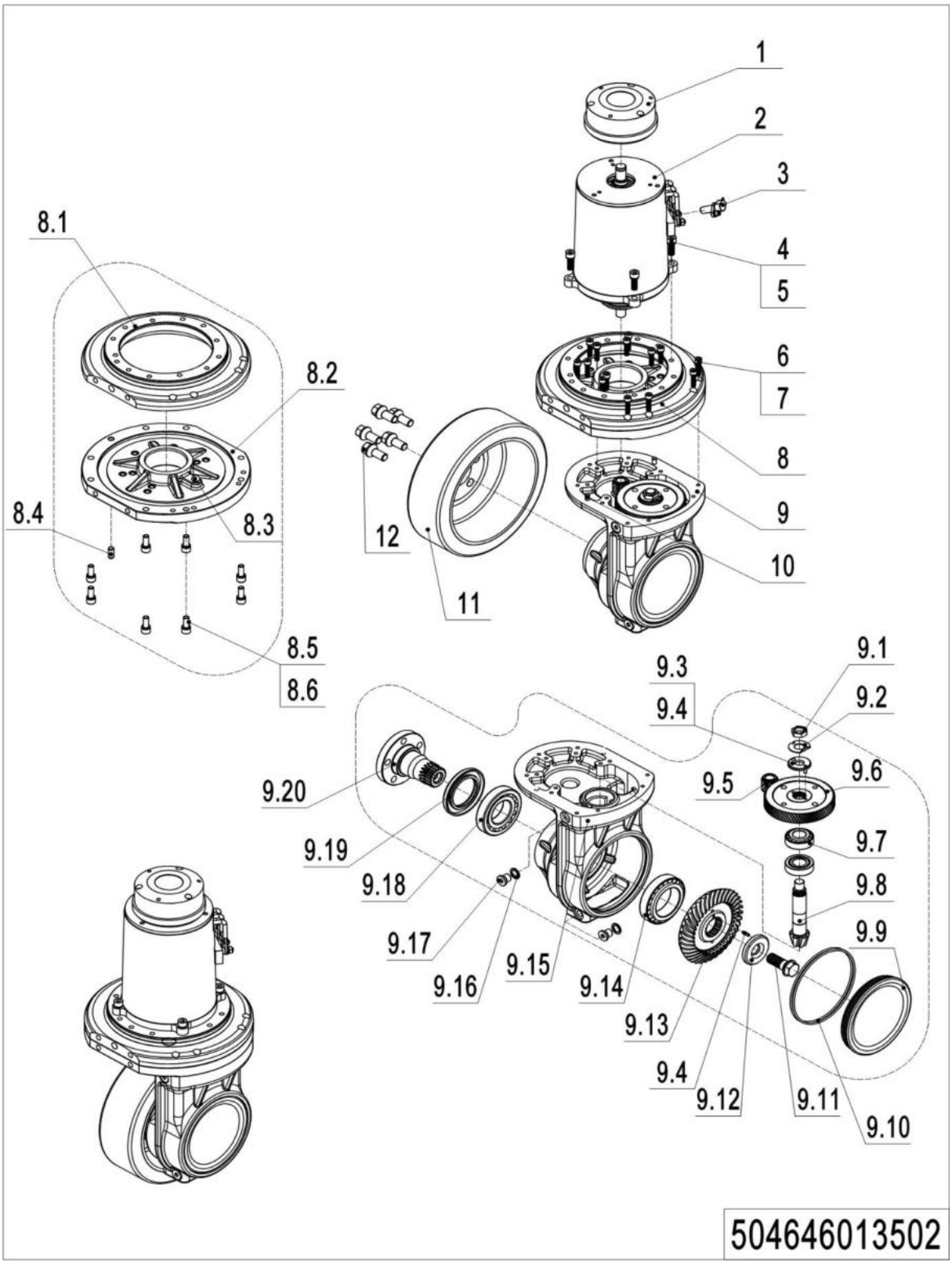

03 Drive Assembly 1.3kW (504646013502)Continuation

No.	Item Code	Mark	Item Description	Qty.	Substitute	Note
9.15	961002700002		Gearbox	1		
9.16	910800900007		Seal Ring	2		
9.17	940998520042		Screw Plug	2		
9.18	910700600040		Bearing	1		
9.19	940998520040		Sealing Ring	1		
9.20	961002700005		Drive Shaft	1		
10	910600200005		Spring Pin	2		
11	961002700010		Wheel Φ230×65	1		
12	940998520029		Screw	5		

Chapter 2: Hydraulic System

01 Hydraulic System (504646024001)

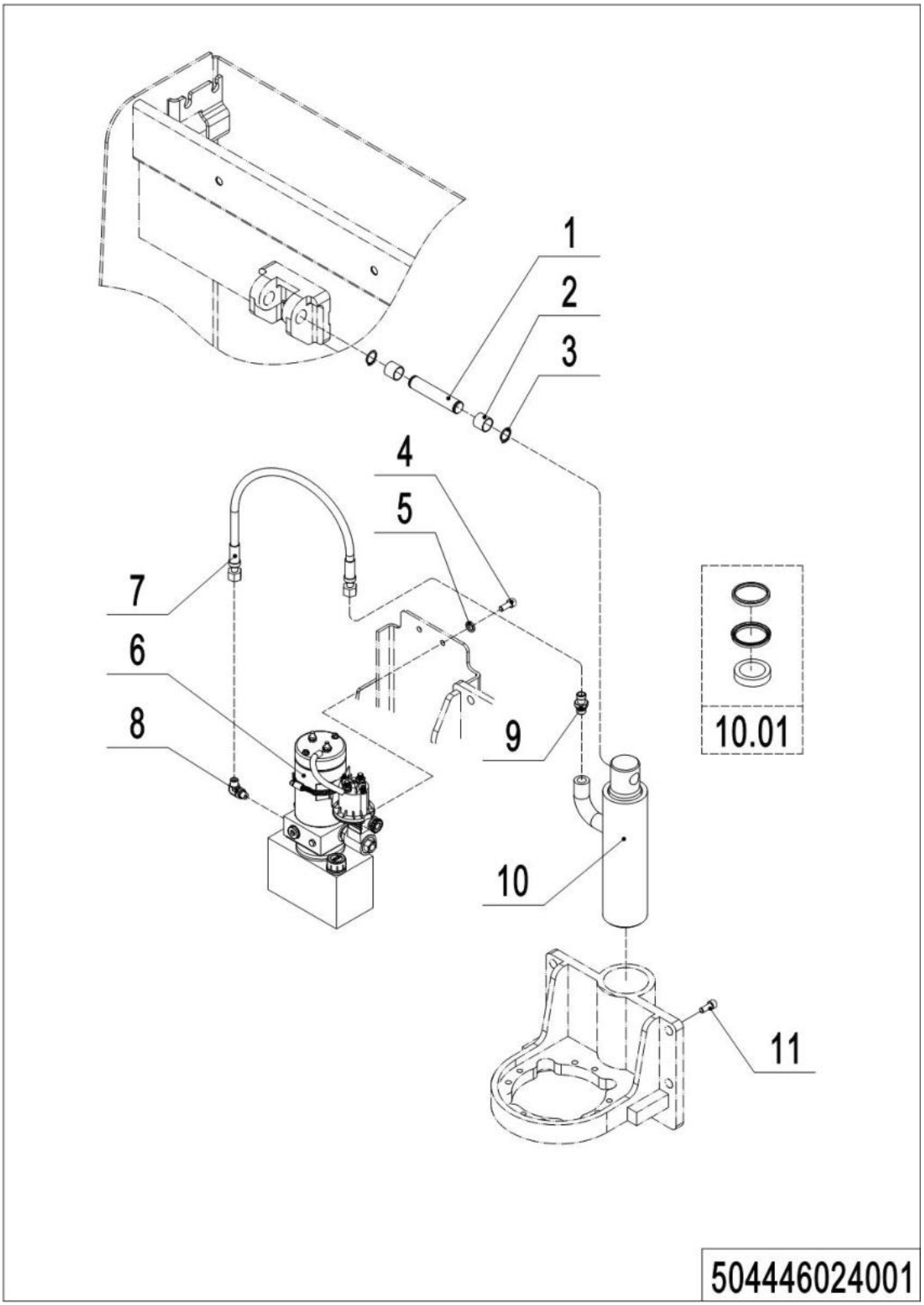

01 Hydraulic System (504646024001)

No.	Item Code	Mark	Item Description	Qty.	Substitute	Note
1	505638520033	2	Pin	1		
2	940500100019	1	Bushing	2		
3	910401300011	1	Circlip	2		
4	910200200055		Screw	2		
5	910400500006	1	Spring Washer	2		
6	950900100147		Pump Unit	1		See 504646024002(WB)
6	950900100143		Pump Unit	1		See 504646024003(YX)
7	504424020005		Hose	1		
8	950401100002		Joint	1		
9	950400400001		Joint	1		
10	504424010001	2	Cylinder	1		
10.01	504498510000	1	Seal Kit	1		
11	910200200075	1	Screw	1		

02 Hydraulic Power Unit (WB) (504646024002)

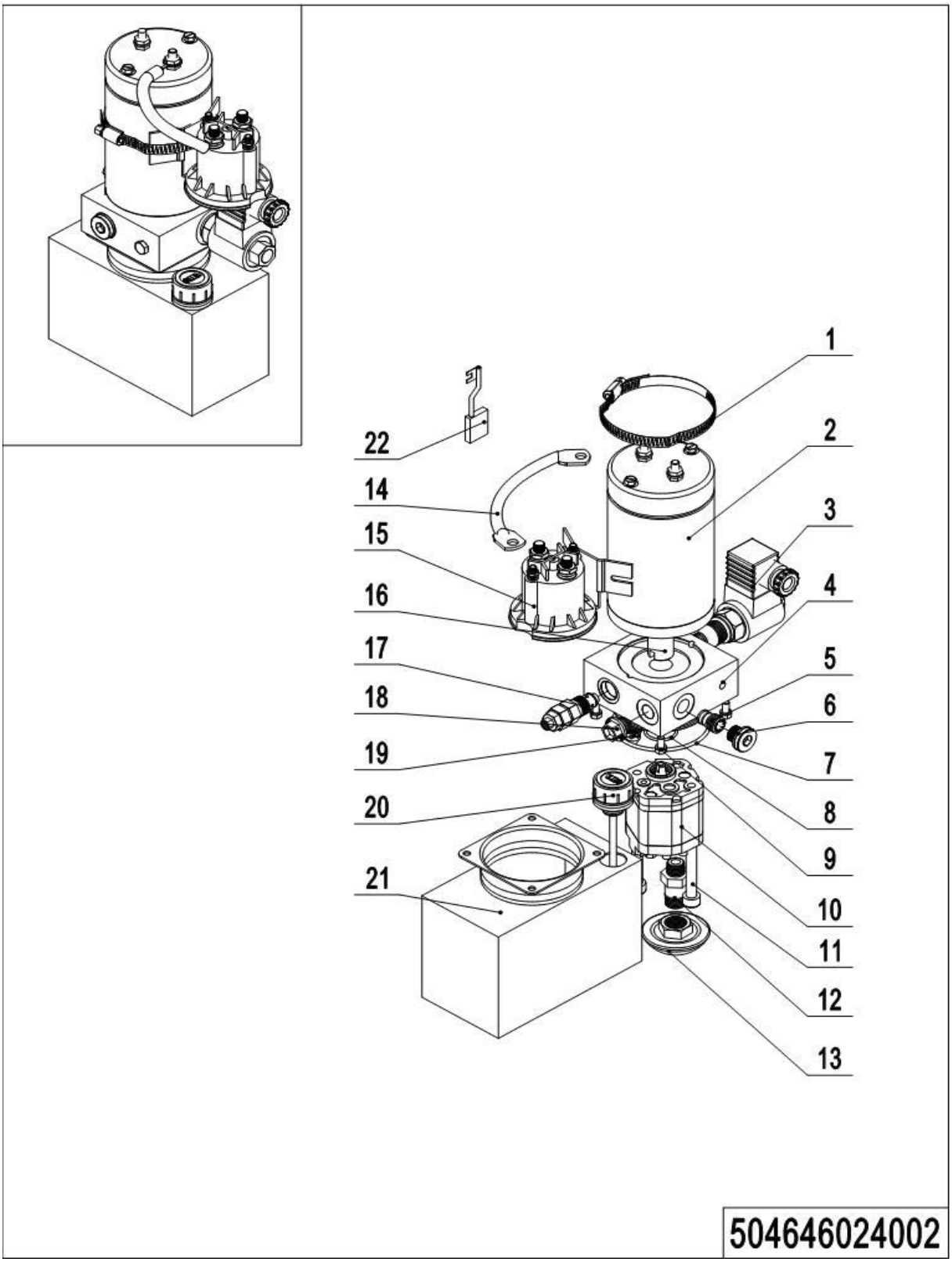

1= Supply as package. 2= Supply with constraints. 3= Phasing-out supply. 4= Supply as assembly. 5= Check other tables.

02 Hydraulic Power Unit (WB) (504646024002)

No.	Item Code	Mark	Item Description	Qty.	Substitute	Note
--	950900100147		Pump Unit	1		
1	504498520017	2	Hoop	1		
2	504498510007	2	Motor	1		
3	504498510011	2	Magnetic Valve	1		
4	504498520018	2	Valve Block	1		
5	504498510012	2	Check Valve	1		
6	504498520019	2	End Cap	2		
7	504498520020	2	O-Ring	1		
8	910800100063	2	O-Ring	1		
9	504498520022	2	Bolt	4		
10	504498510013	2	Gear Pump	1		
11	504498520023	2	Bolt	2		
12	504498520024	2	Oil Tube	1		
13	504498520025	2	Filter	1		
14	504498520026	2	Cables	1		
15	504498510014	2	Switch	1		
16	504498520027	2	Coupling	1		
17	504498510015	2	Overflow Valve	1		
18	504498520028	2	End Cap	1		
19	532698510027	2	Compensation Valve	1		
20	504498520029	2	Cap-Tank	1		
21	504498520030	2	Tank	1		
22	504498510017	2	Carbon Brush	1		

03 Hydraulic Power Unit (YX) (504646024003)

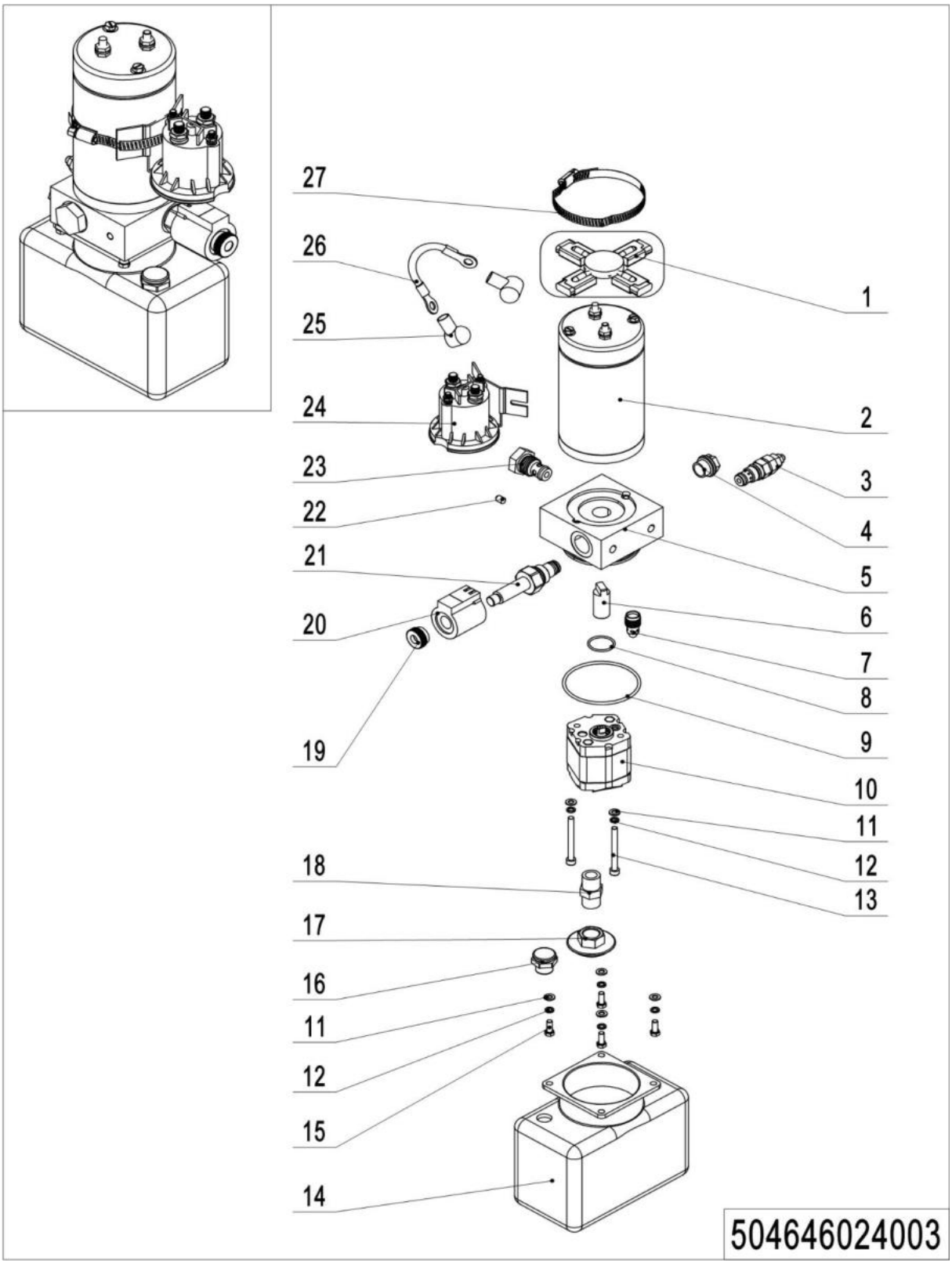

03 Hydraulic Power Unit (YX) (504646024003)

No.	Item Code	Mark	Item Description	Qty.	Substitute	Note
--	950900100143		Pump Unit	1		
1	504698510001		Carbon Brush	2		
2	504698510002		Motor	1		
3	504698510003		Overflow Valve	1		
4	504698520000		End Cap	1		
5	504698520001		Valve Block	1		
6	504698520002		Coupling	1		
7	504698510013		Throttle Valve	1		
8	504698520003		O-Ring	1		
9	504698520004		O-Ring	1		
10	504698510005		Gear Pump	1		
11	910400100004		Flat Washer	6		
12	590198520076		Washer	6		
13	910200200031		Screw	2		
14	504698520006		Tank	1		
15	910100300003		Bolt	4		
16	951100200007		Plug	1		
17	504698510006		Filter	1		
18	504698520007		Oil Tube	1		
19	532298520011		Nut	1		
20	532298510034		Magnetic Valve	1		
21	504698510007		Magnetic Valve	1		
22	504698510008		End Cap	1		
23	504698510009		Check Valve	1		
24	504698510010		Relay	1		
25	921600700002		Battery Terminal Cap	2		
26	537233010005		Cable	1		
27	504698510011		Hoop	1		

Chapter 3: Truck Frame

01 Truck Body (504646021501)

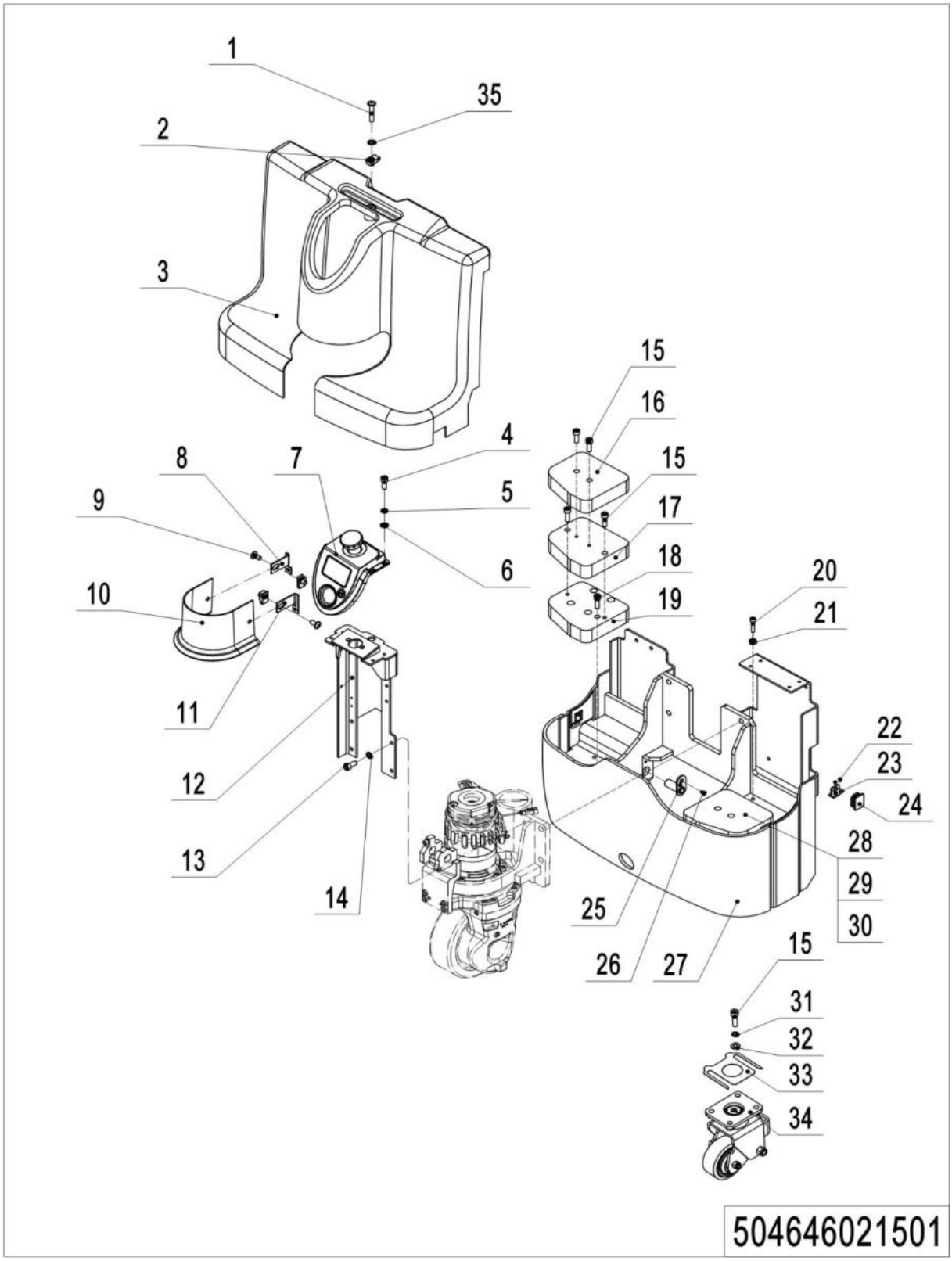

01 Truck Body (504646021501)

No.	Item Code	Mark	Item Description	Qty.	Substitute	Note
1	941100100006	1	Screw	1		
2	940400400003	1	Cage Nut	3		
3	504621520014		Protective Cover	1		
4	910200200035	1	Screw	4		
5	910400500005	1	Spring Washer	4		
6	910400100005	1	Flat Washer	4		
7	504610020000		Protective Cover	1		
8	504410020026		Mounting Plate	1		
9	941100100007	1	Screw	2		
10	504421520020		Protective Cover	1		
11	504410020027		Mounting Plate	1		
12	504421510002	1	Bracket	1		
13	910200200055	1	Screw	4		
14	910400500006	1	Spring Washer	4		
15	910200200078		Screw	16		
16	504621520004		Plate	1		
17	504621520005		Plate	1		
18	910200200076		Screw	2		
19	504621520007		Plate	1		
20	910200200081	1	Screw	2		
21	910300100007	1	Nut	2		
22	910200500035		Screw	2		
23	504621520002		Mounting Plate	1		
24	506621520022		Dust Cover	1		
25	505921510002		Axle	2		
26	910200400016		Screw	2		
27	504621510000		Chassis	1		EU
27	504621510001		Chassis	1		US
28	504621520003		Plate	1		
29	504621520006		Plate	1		

01 Truck Body (504646021501) Continuation

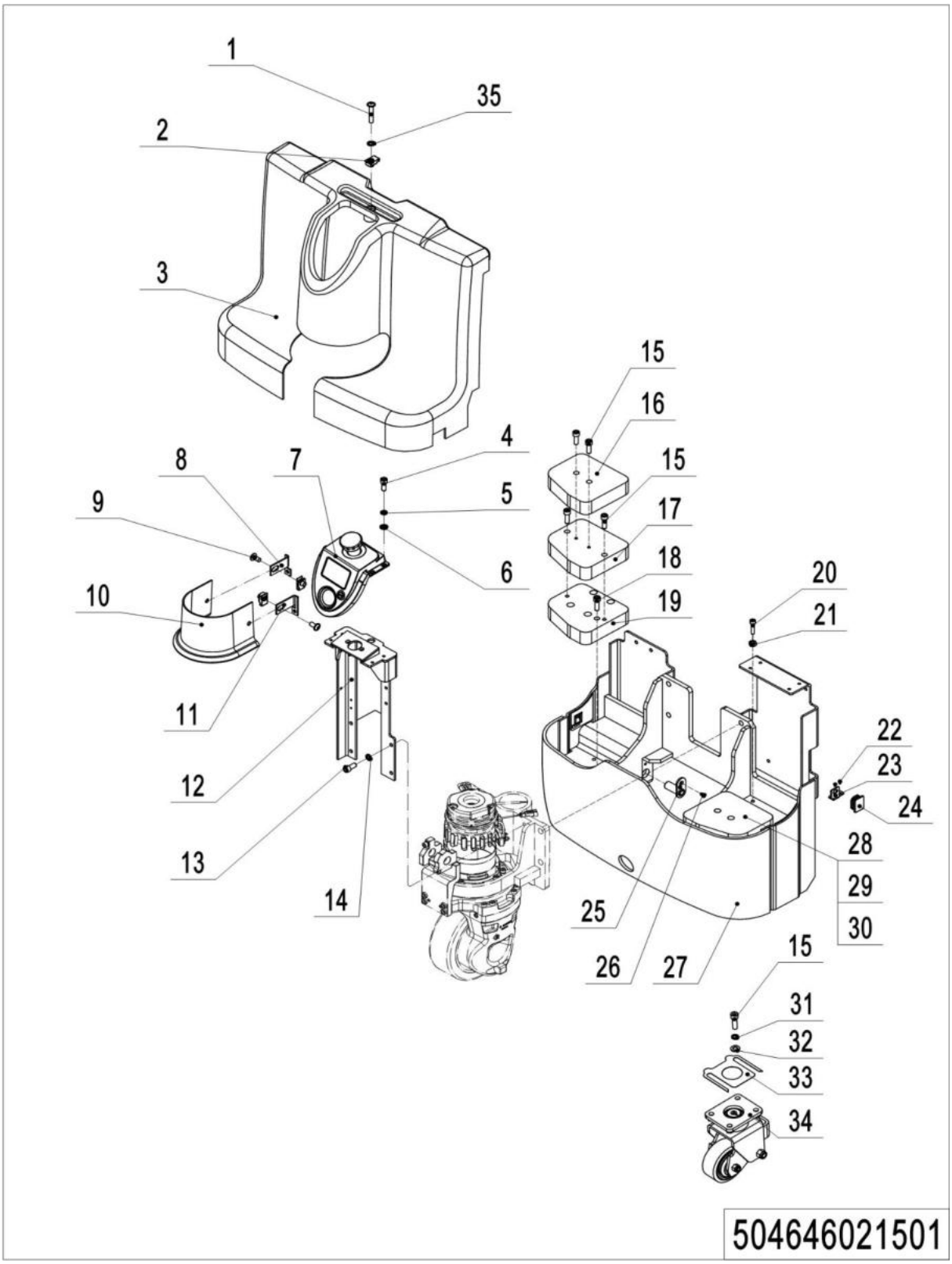

01 Truck Body (504646021501) Continuation

No.	Item Code	Mark	Item Description	Qty.	Substitute	Note
30	504621520008		Plate	1		
31	910400500007		Spring Washer	8		
32	910400100007		Flat Washer	8		
33	505616520014		Washer	2		
34	504416510001		Caster Assembly	2		
35	504621020002		Gasket	1		

02 Chassis (EU) (504646038501)

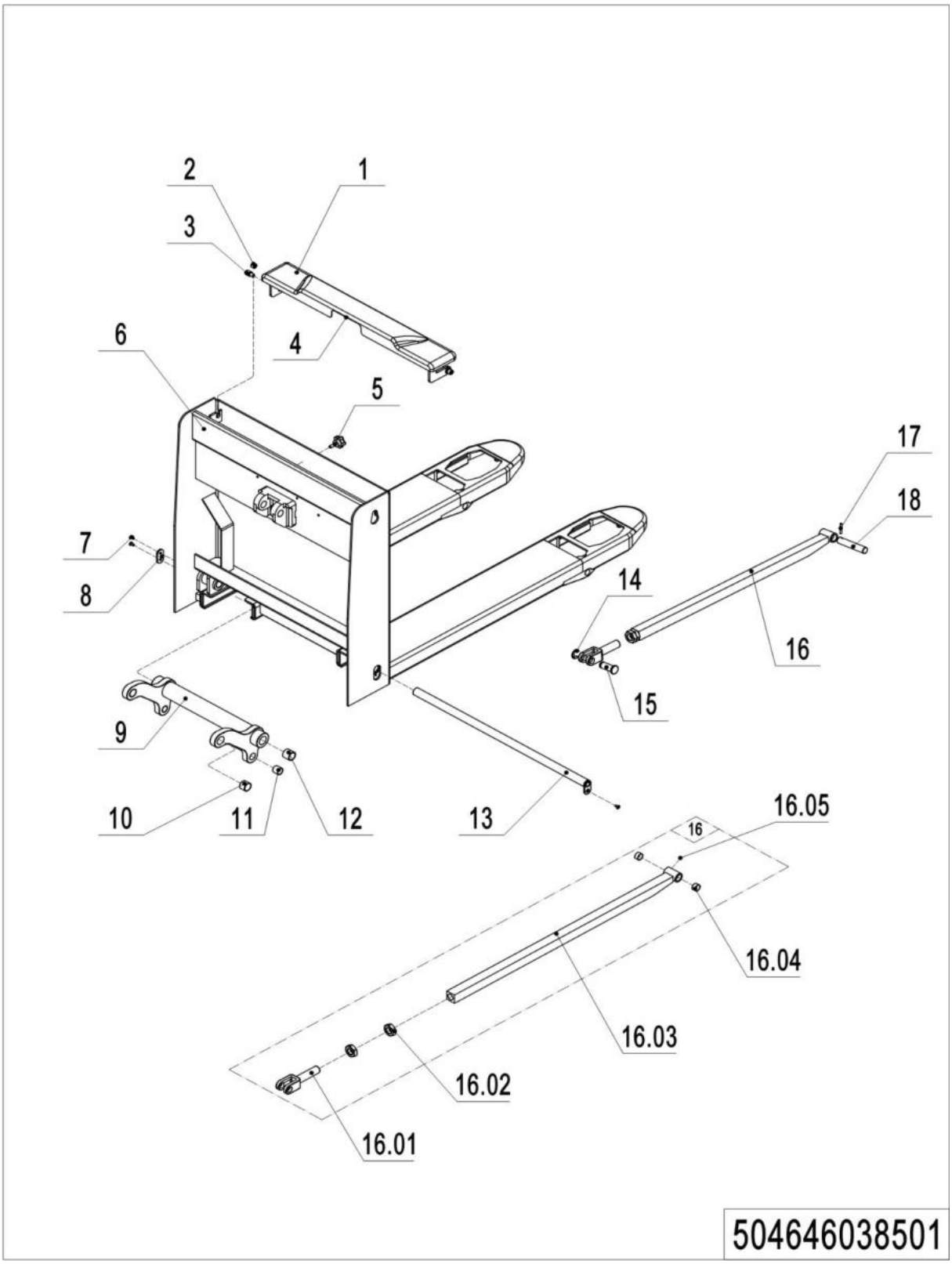

02 Chassis (EU) (504646038501)

No.	Item Code	Mark	Item Description	Qty.	Substitute	Note
1	504621010000		Cell Cover	1		
2	505621020004		Crash Pad	2		
3	505621020003		Crash Pad	2		
4	505921020007		Sealing Strip	1		
5	911000300005		Handle	1		
6	504638510000		Chassis(540x1150)	1		
6	504638510001		Chassis (685x1150)	1		
7	910200400016		Screw	3		
8	505638520031		Fixing Plate	1		
9	505638510001		Rise Arm	1		540
9	505638510007		Rise Arm	1		685
10	940500100027		Bushing	2		
11	940500100019		Bushing	2		
12	940500100032		Bushing	2		
13	505638510003		Pin	1		
14	910401700005		Circlip	2		
15	505638520034		Axle	2		
16	504698510000		Push Rod Kit (1150)	2		
16.01	505638520035		Push Rod Fork	2		
16.02	910300400010		Nut	4		
16.03	504638510004		Push Rod （1150）	2		
16.04	940500100012		Bushing	4		
16.05	911200100001		Oil Cup	2		
17	910600500004		Spring Pin	2		
18	505638520037		Axle	2		

03 Chassis (US)(504646038502)

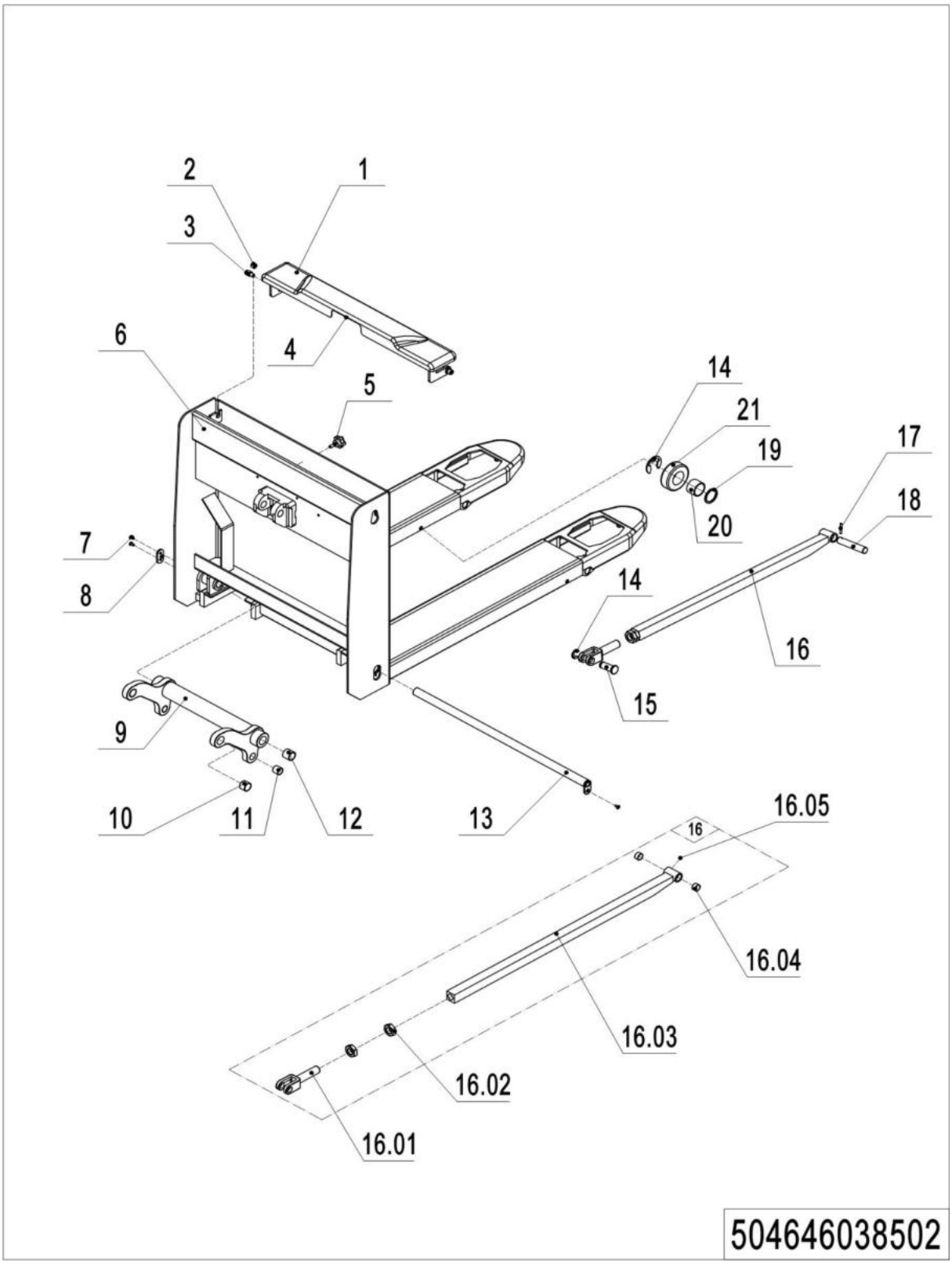

03 Chassis(US) (504646038502)

No.	Item Code	Mark	Item Description	Qty.	Substitute	Note
1	504621010000		Cell Cover	1		
2	505621020004		Crash Pad	2		
3	505621020003		Crash Pad	2		
4	505921020007		Sealing Strip	1		
5	911000300005		Handle	1		
6	504638510002		Chassis(540x1150)	1		
6	504638510003		Chassis(685x1150)	1		
7	910200400016		Screw	3		
8	505638520031		Fixing Plate	1		
9	505638510001		Rise Arm	1		540
9	505638510007		Rise Arm	1		685
10	940500100027		Bushing	2		
11	940500100019		Bushing	2		
12	940500100032		Bushing	2		
13	505638510003		Pin	1		
14	910401700005		Circlip	6		
15	505638520034		Axle	2		
16	504698510000		Push Rod Kit(1150)	2		
16.01	505638520035		Push Rod Fork	2		
16.02	910300400010		Nut	4		
16.03	504638510004		Push Rod (1150)	2		
16.04	940500100012		Bushing	4		
16.05	911200100001		Oil Cup	2		
17	910600500004		Spring Pin	2		
18	505638520037		Axle	2		
19	940600500014		Washer	4		
20	940500100017		Bushing	4		
21	504738520053		Roller	4		

Chapter 4: Steering System, Braking System, Wheels

01 Tiller (504446011001)

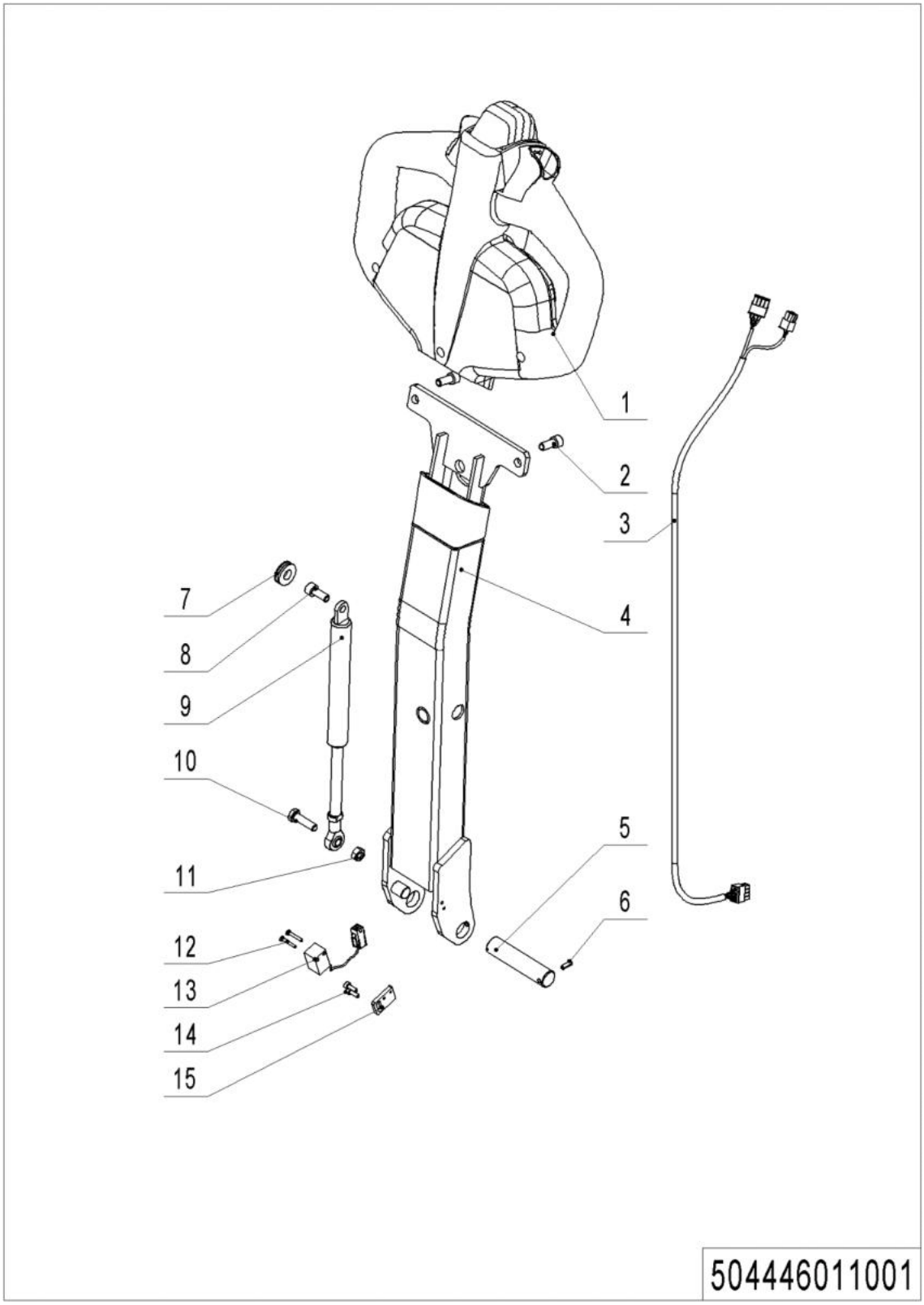

01 Tiller (504446011001)

No.	Item Code	Mark	Item Description	Qty.	Substitute	Note
1	922100100099		Tiller	1		See 566546010002
2	910200200057	1	Screw	2		
3	534733010001		Wire Harness	1		
4	504411010002		Tiller	1		
5	504411020011		Axle	1		
6	910600400009	1	Spring Pin	1		
7	502311020009		Close Plate	1		
8	941100400001	1	Screw	1		
9	940400100052		Air Spring	1		
10	910100300024	1	Bolt	1		
11	910300100006	1	Nut	1		
12	910200500015	1	Screw	2		
13	505633510002		Proximity Switch	1		
14	910200200014	1	Screw	2		
15	504411020009		Baseboard	1		

02 Tiller (566546010002)

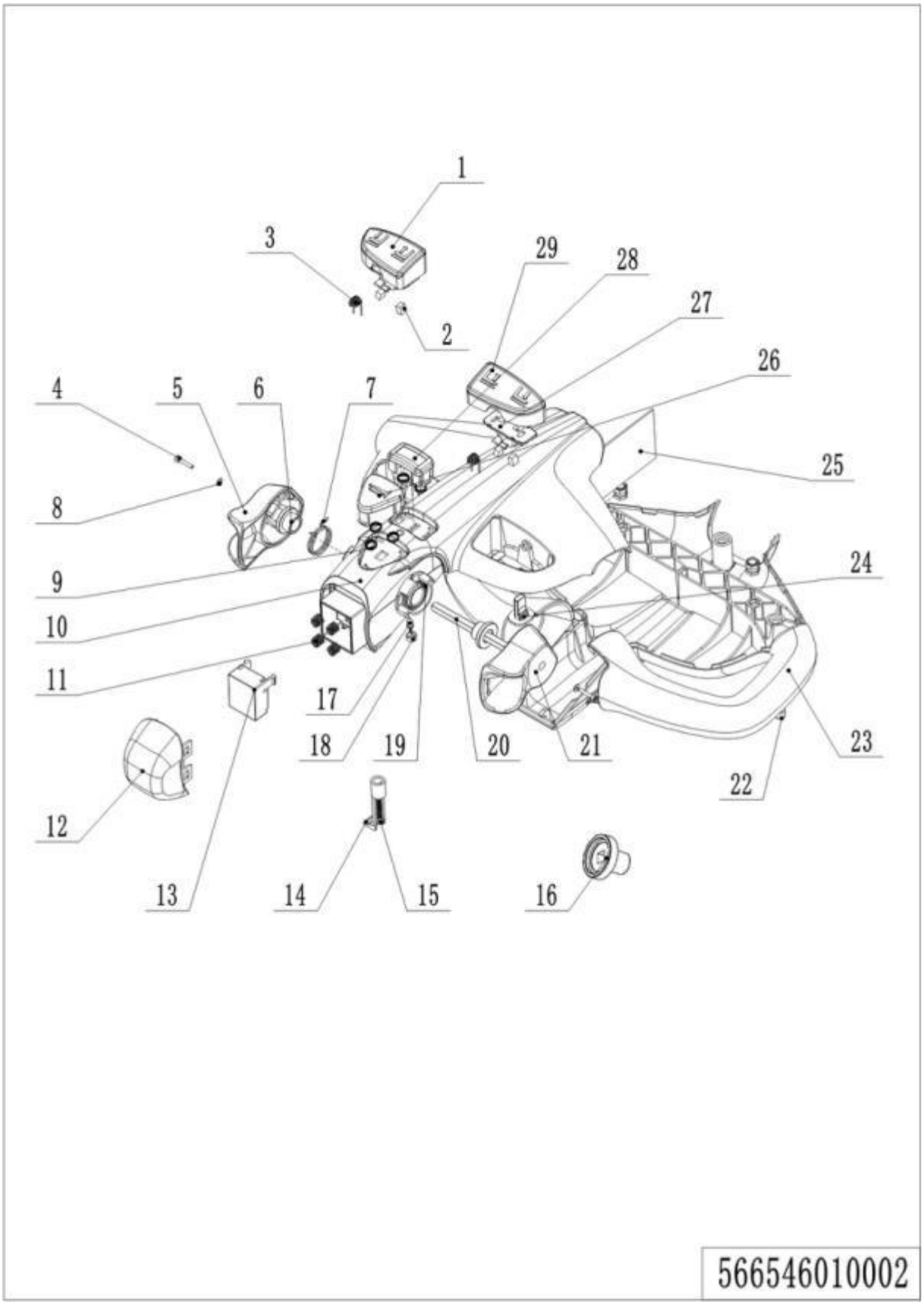

02 Tiller (566546010002)

No.	Item Code	Mark	Item Description	Qty.	Substitute	Note
1	505698520016		Button cap	1		
2	505698520005		Magnet	4		
3	505698520018		Torsional Spring	2		
4	505698520008		Screw	2		
5	505698520001		Traction lever	1		
6	505698520004		Sleeve	2		
7	505698520027		Torsional Spring	1		
8	505698520009		Washer	2		
9	505698520003		Spring	5		
10	505698520099		Handle Cap	1		
11	505698520006		Spring	4		
12	505698520020		Button Cap-	1		
13	505698520100		Pedestal	1		
14	505698520012		Clamp	1		
15	505698520023		Screw	1		
16	505698520102		Magnet holder	2		
17	505698520024		Light	1		
18	505698520025		Lamp Holder	1		
19	505698520026		Torsional Spring	1		
20	505698520011		Axle-Traction lever	1		
21	505698520010		Traction lever	1		
22	505698520007		Screw	3		
23	505698520015		Handle Cap	1		
24	505698520013		Sensor	2		
25	505698520101		circuit Board	1		
26	505698520002		Horn Button	1		
27	505698520017		Fixing Base	2		
28	505698520021		Button Cap	1		
29	505698520022		Button Cap	1		

03 Load Wheel (Tandem) (505646017001)

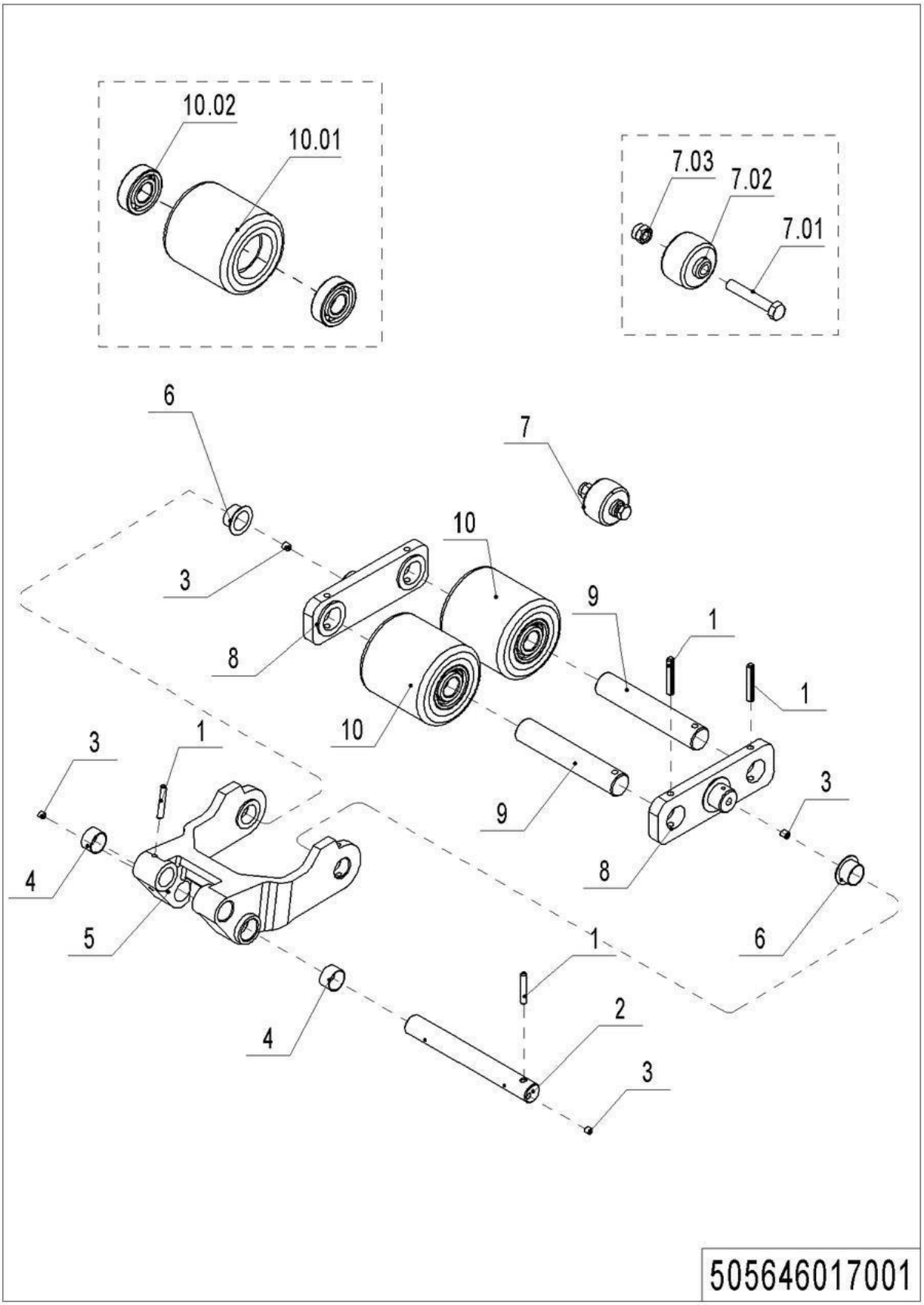

1= Supply as package. 2= Supply with constraints. 3= Phasing-out supply. 4= Supply as assembly. 5= Check other tables.

03 Load Wheel (Tandem) (505646017001)

No.	Item Code	Mark	Item Description	Qty.	Substitute	Note
1	910600400027	1	Spring Pin	8		
2	505638520038		Pin	2		
3	911200100001		Oil Cup	2		
4	940500100012		Bushing	4		
5	505638520036		Riser	2		
6	940500200003		Bushing	2		
7	502398510003		Pulley components	2		
7.01	910300500005	1	Nut	2		
7.02	505638520039		Running Pulley	2		
7.03	910100100035	1	Bolt	2		
8	505617020001		Plate	4		
9	505617020000		Axle	4		
10	505698510003		Wheel	4		
10.01	940300300010		WheelΦ84x84	4		
10.02	910700200019		Bearing	8		

04 Load Wheel (Single) (505646017002)

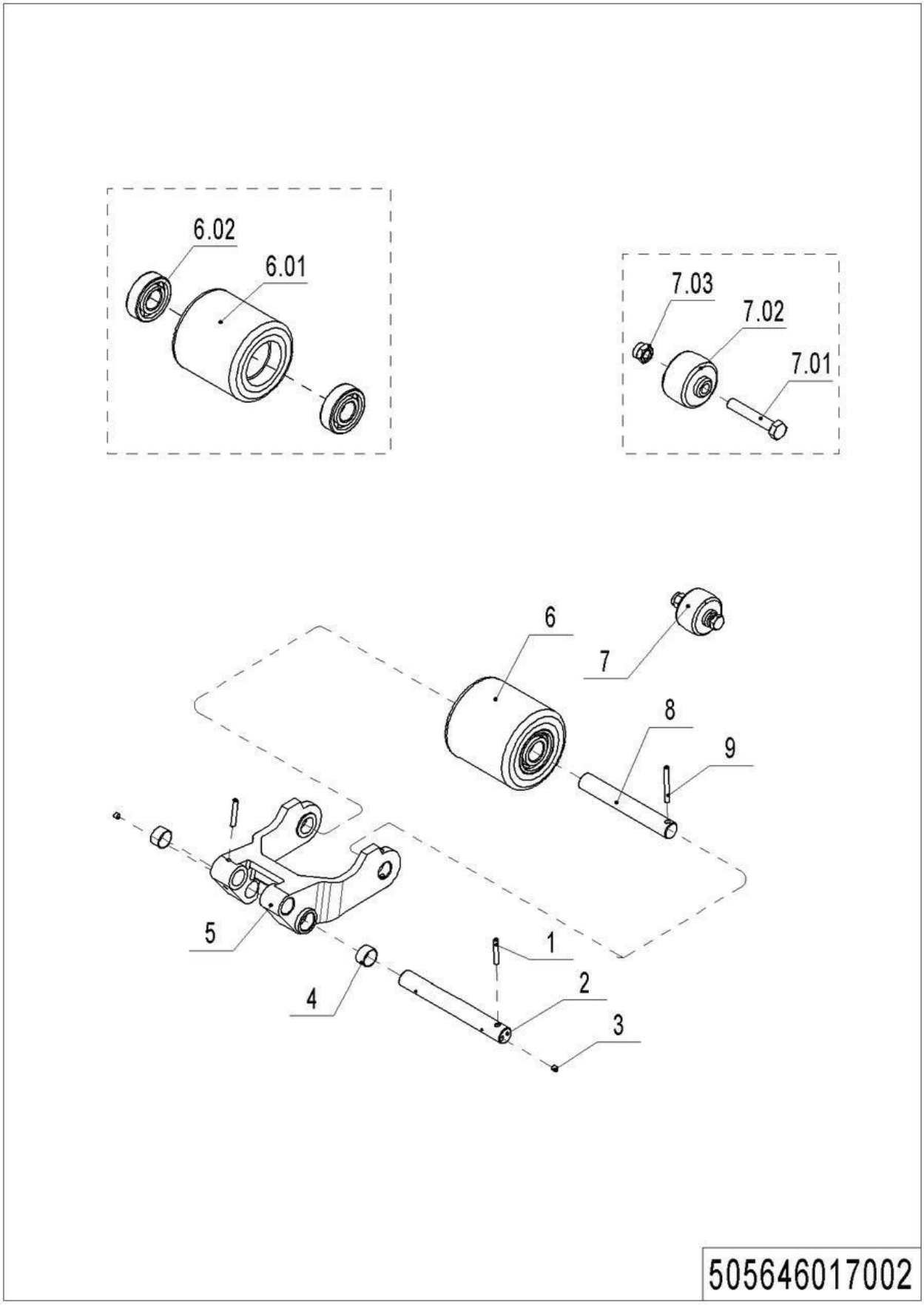

1= Supply as package. 2= Supply with constraints. 3= Phasing-out supply. 4= Supply as assembly. 5= Check other tables.

04 Load Wheel (Single) (505646017002)

No.	Item Code	Mark	Item Description	Qty.	Substitute	Note
1	910600400027	1	Spring Pin	4		
2	505638520038		Pin	2		
3	911200100001		Oil Cup	2		
4	940500100012		Bushing	4		
5	505638520036		Riser	2		**EU**
5	504738520054		Riser	2		**US**
6	505698510004		Wheel	2		
6.01	940300300006		WheelΦ82x110	2		
6.02	910700200019		Bearing	4		
7	502398510003		Pulley components	2		
7.01	910300500005		Nut	2		
7.02	505638520039		Running Pulley	2		
7.03	910100100035	1	Bolt	2		
8	505617020002		Axle	2		
9	910600400030	1	Spring Pin	4		

05 Caster (504446016501)

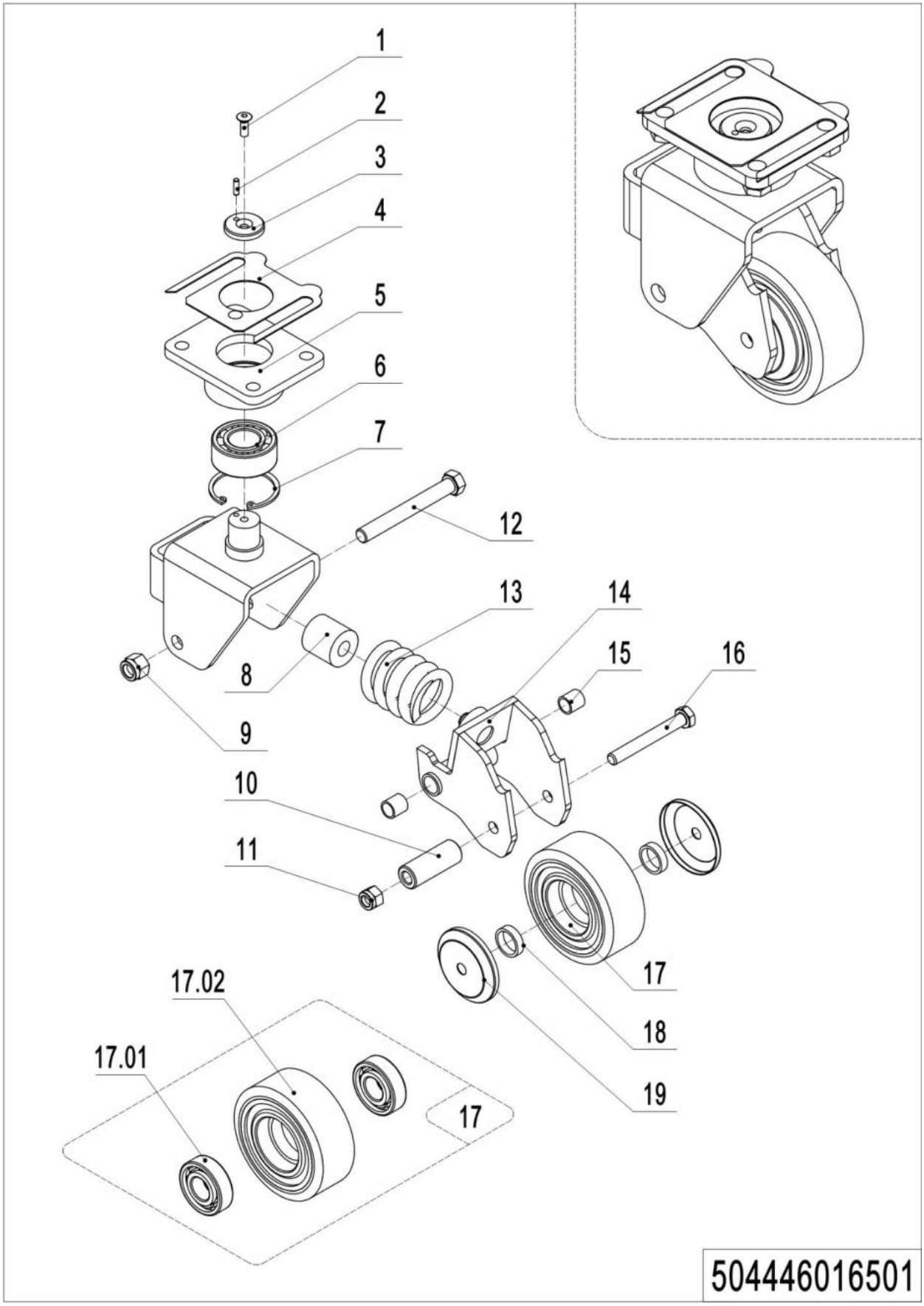

1= Supply as package. 2= Supply with constraints. 3= Phasing-out supply. 4= Supply as assembly. 5= Check other tables.

05 Caster (504446016501)

No.	Item Code	Mark	Item Description	Qty.	Substitute	Note
--	504416510001		Caster Assembly	1		
1	941100300001	1	Screw	1		
2	910600100004	1	Cylindrical Pin	1		
3	505616520007	1	Retaining Ring	1		
4	505616520014		Pad	1		
5	504416510002	2	Plate	1		
6	910700500002		Bearing	1		
7	910401400016	1	Circlip	1		
8	505616520000		Spring	1		
9	910300500006	1	Nut	1		
10	505616520013	1	Bushing	1		
11	910300500005	1	Nut	1		
12	941100200002	1	Bolt	1		
13	940400500006	1	Spring	1		
14	505616510003	2	Whirling Arm	1		
15	940500100002		Bushing	2		
16	910100100038	1	Bolt	1		
17	505698510000		Wheel	1		
17.01	910700200019		Bearing	2		
17.02	940300300018		WheelΦ100x40	1		
18	505616520012	1	Check Ring	2		
19	505616520011		Dust Cap	2		

Chapter 5: Electrical Parts

01 Display Assembly (504646010001)

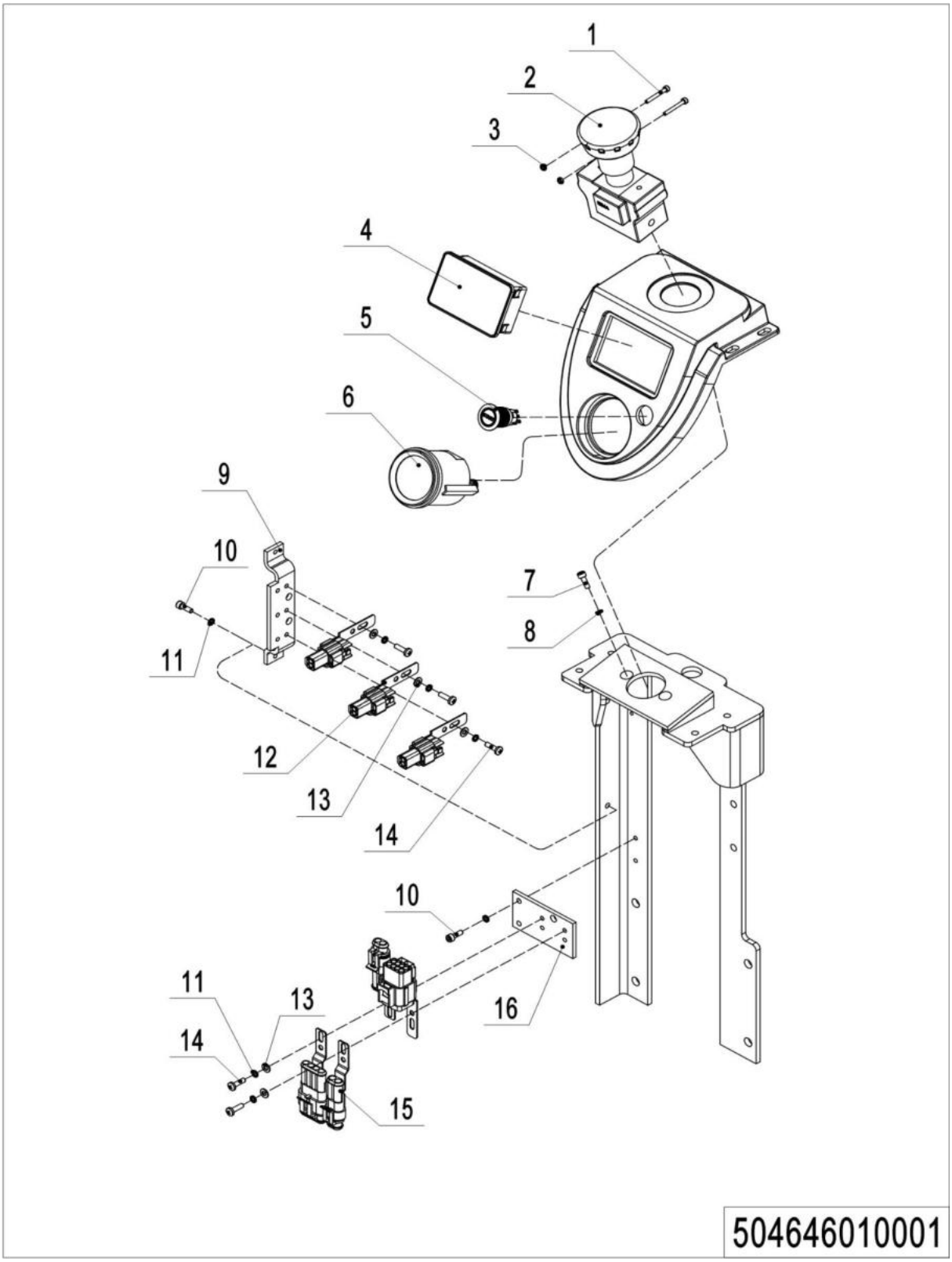

1= Supply as package. 2= Supply with constraints. 3= Phasing-out supply. 4= Supply as assembly. 5= Check other tables.

01 Display Assembly (504646010001)

No.	Item Code	Mark	Item Description	Qty.	Substitute	Note
1	910200500016		Screw	2		
2	920200100031		Button	1		
3	910300100002		Nut	2		
4	920200200071		Coded Lock	1		
5	532233010023		Button	1		
6	921100100135		Protective Cover	1		
6	921100100140		Coulombmeter	1		
7	910200200023		Screw	2		
8	910400500004		Spring Washer	2		
9	504421520023		Bracket	1		
10	910200200014		Screw	4		
11	910400500003		Spring Washer	10		
12	921300300005		Holder	5		
13	910400100003		Flat Washer	3		
14	910200500022		Screw	6		
15	921300300010		Connector Holder	3		
16	504421520024		Plate	1		

02 Wire Harness(F2A) (504646033001)

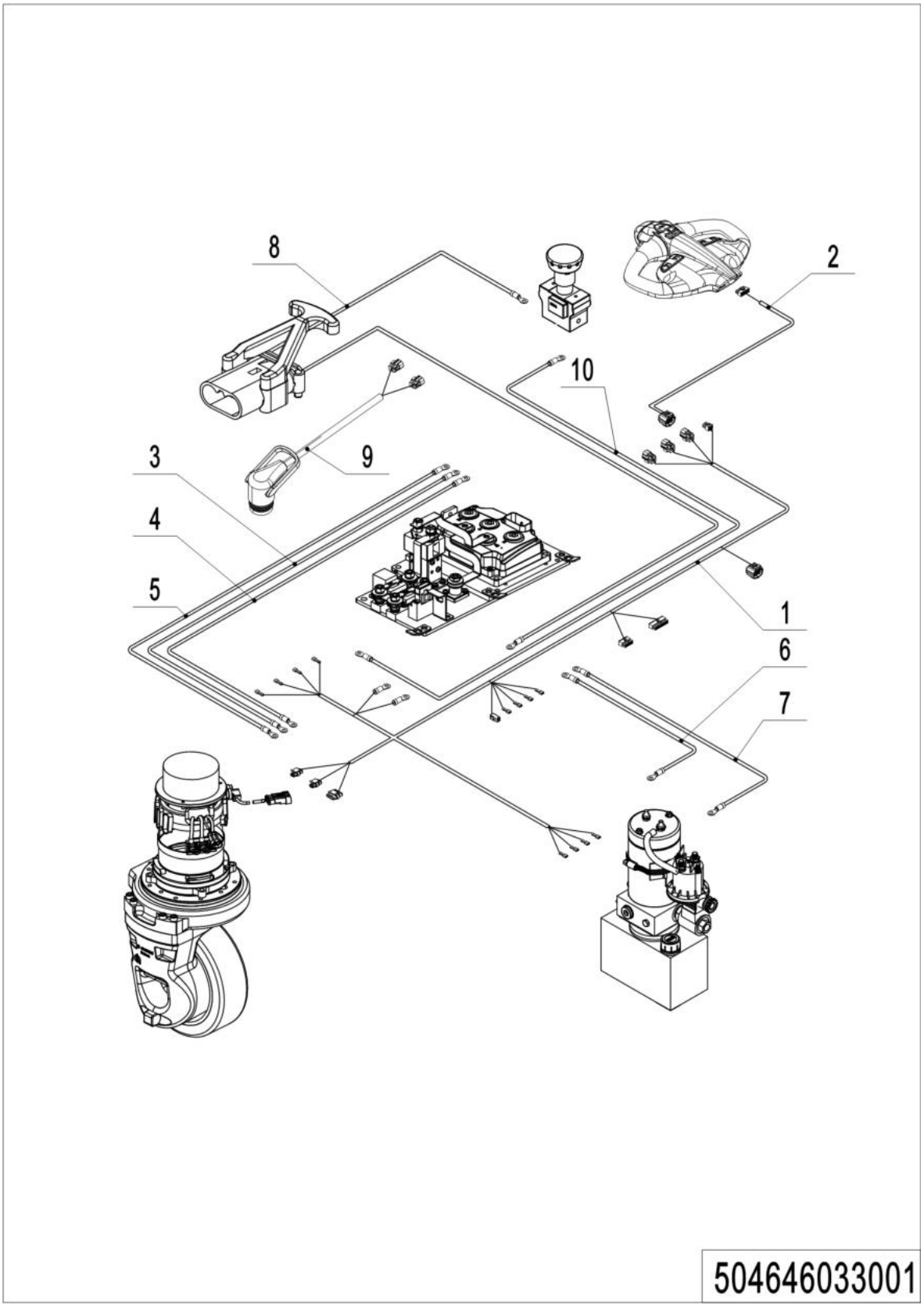

1= Supply as package. 2= Supply with constraints. 3= Phasing-out supply. 4= Supply as assembly. 5= Check other tables.

02 Wire Harness(F2A) (504646033001)

No.	Item Code	Mark	Item Description	Qty.	Substitute	Note
1	504633010013		Wire Harness	1		(F2A)
2	504633010016		Wire Harness	1		(F2A)
3	504633010008		Cable	1		
4	504633010009		Cable	1		
5	504633010010		Cable	1		
6	504633010003		Cable	1		
7	504633010004		Cable	1		
8	504633010011		Wire Harness	1		
9	504633010014		Wire Harness	1		
10	504633010007		Cable	1		

03 Wire Harness(A0E) (504646033002)

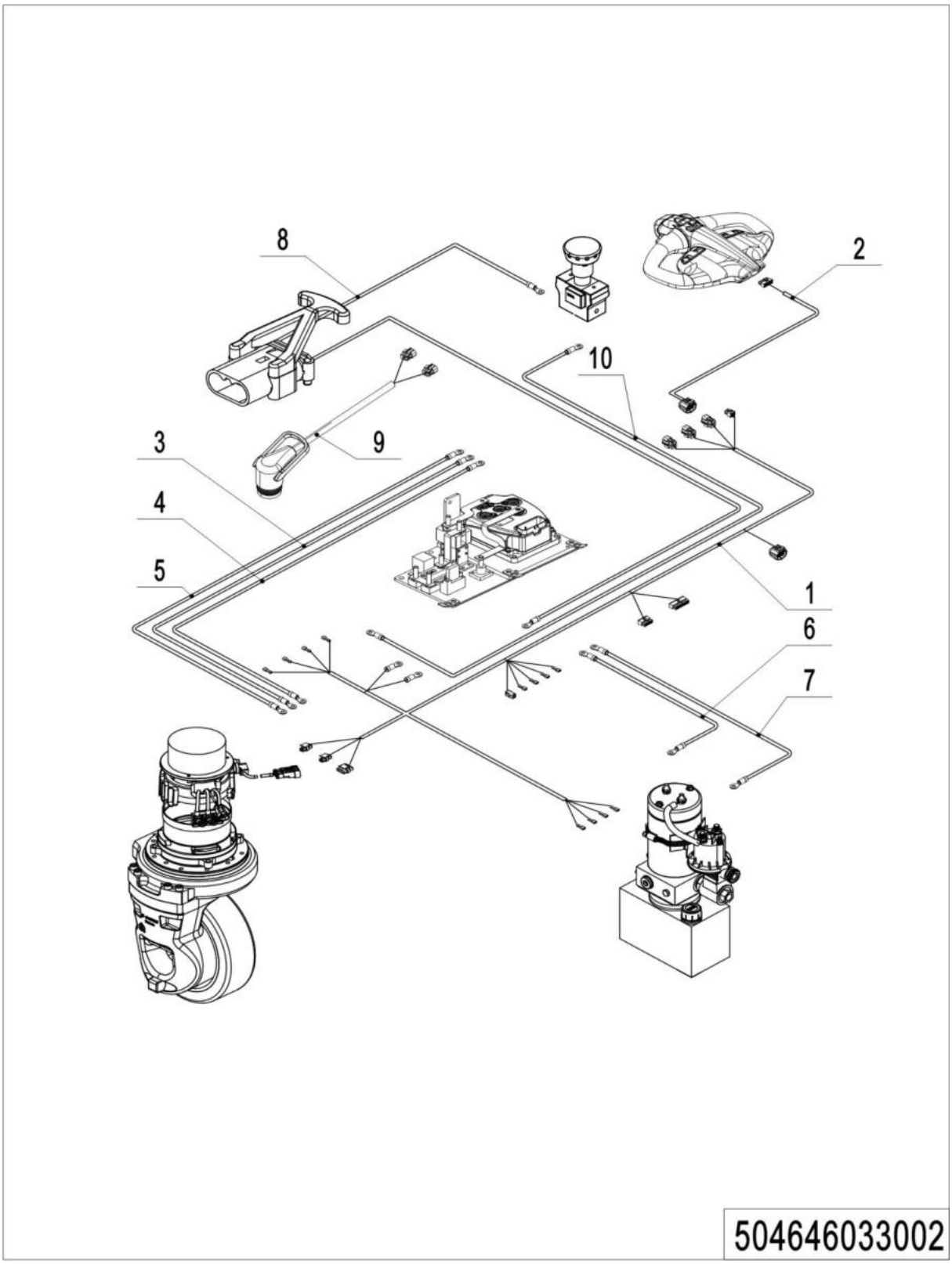

1= Supply as package. 2= Supply with constraints. 3= Phasing-out supply. 4= Supply as assembly. 5= Check other tables.

03 Wire Harness(A0E) (504646033002)

No.	Item Code	Mark	Item Description	Qty.	Substitute	Note
1	504633010000		Wire Harness	1		(A0E)
2	504633010012		Wire Harness	1		(A0E)
3	504633010008		Cable	1		
4	504633010009		Cable	1		
5	504633010010		Cable	1		
6	504633010003		Cable	1		
7	504633010004		Cable	1		
8	504633010011		Wire Harness	1		
9	504633010014		Wire Harness	1		
10	504633010007		Cable	1		

04 Controller(F2A) (504646033003)

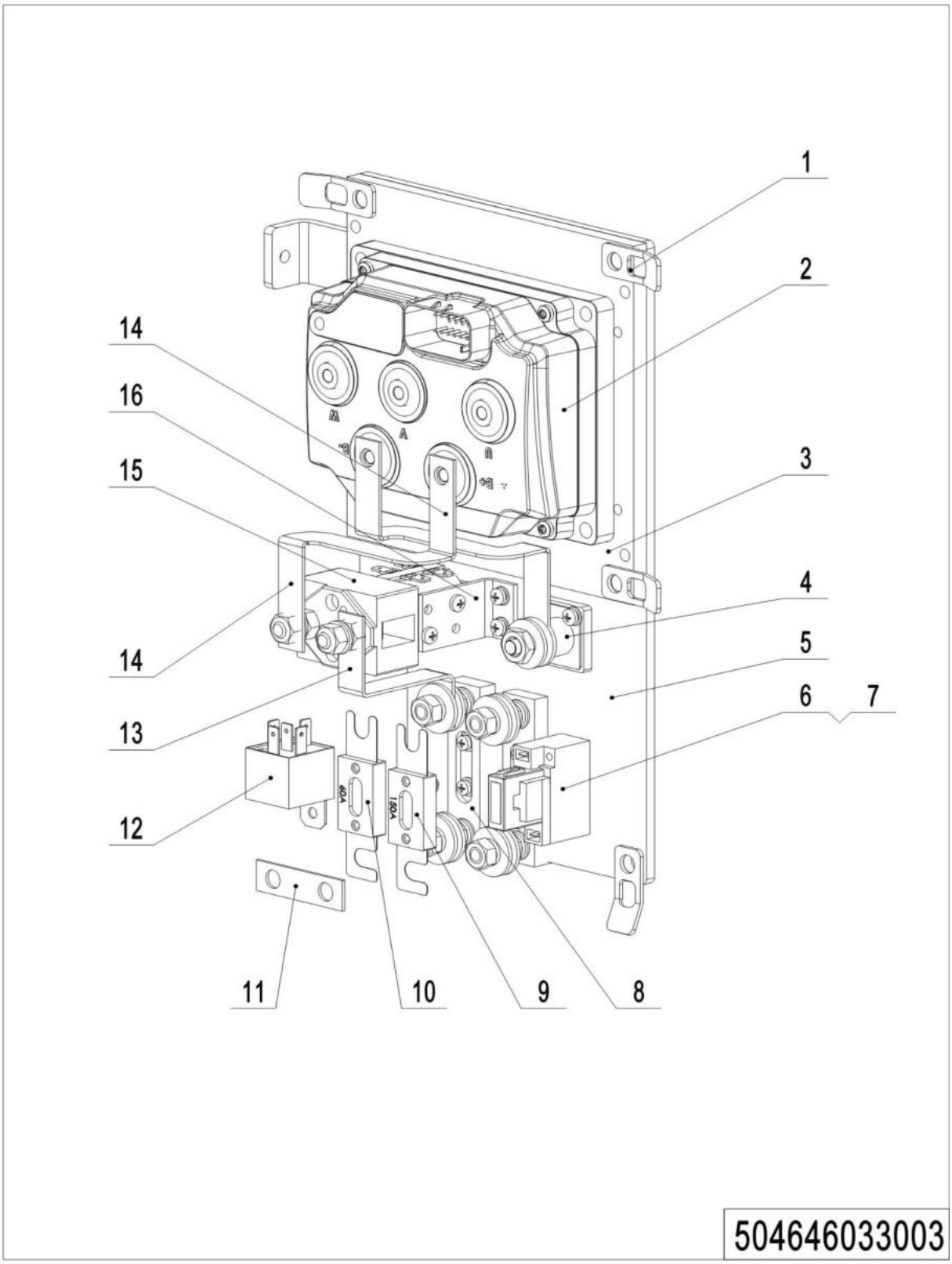

1= Supply as package. 2= Supply with constraints. 3= Phasing-out supply. 4= Supply as assembly. 5= Check other tables.

04 Controller (504646033003)

No.	Item Code	Mark	Item Description	Qty.	Substitute	Note
1	921300200012		Pipe Clip	4		
2	921400100164		Wire Harness	1		
3	504621520012		Aluminum Plate	1		
4	920100400001		Fuse Holder	1		
5	504621520011		Mounting Plate	1		
6	920100400006		Fuse Holder	1		
7	920100200002		Fuse	1		
8	920100400002		Fuse Holder	2		
9	920100100007		Fuse	1		
10	920100100004		Fuse	1		
11	505633020003		Copper Busbar	1		
12	920800100011		Relay	1		
13	505633020002		Copper Busbar	1		
14	505633020007		Copper Busbar	1		
15	505633020008		Copper Busbar	1		
16	920700100004		Fixing Mount	1		
17	921300400001		Fixing Mount	1		

05 Controller(A0E) (504646033004)

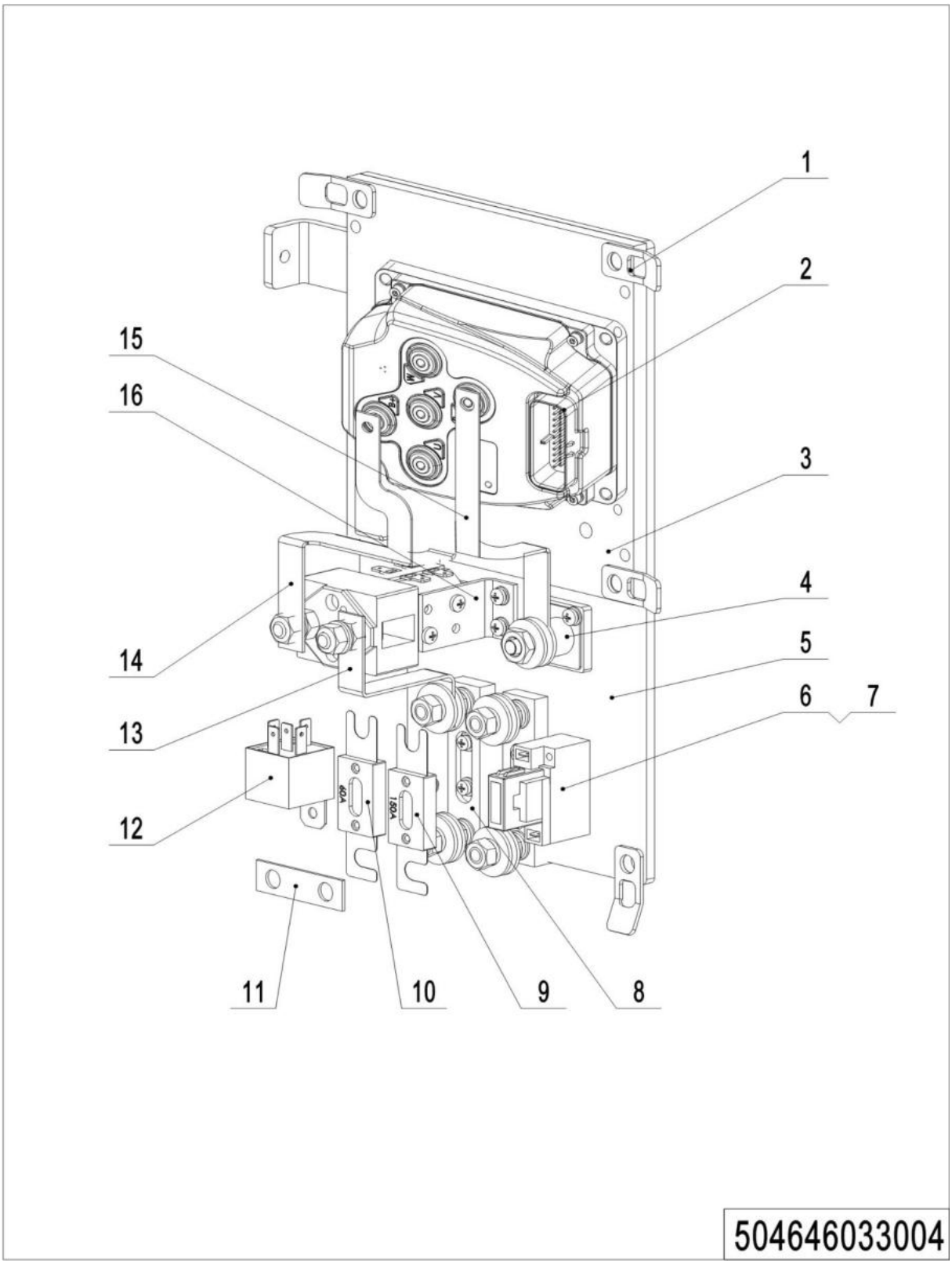

05 Controller (504646033004)

No.	Item Code	Mark	Item Description	Qty.	Substitute	Note
1	921300200012		Pipe Clip	4		
2	921400100219		Wire Harness	1		
3	504621520012		Aluminum Plate	1		
4	920100400001		Fuse Holder	1		
5	504621520011		Mounting Plate	1		
6	920100400006		Fuse Holder	1		
7	920100200002		Fuse	1		
8	920100400002		Fuse Holder	2		
9	920100100007		Fuse	1		
10	920100100004		Fuse	1		
11	505633020003		Copper Busbar	1		
12	920800100011		Relay	1		
13	505633020002		Copper Busbar	1		
14	504633020001		Copper Busbar	1		
15	504633020002		Copper Busbar	1		
16	920700100004		Fixing Mount	1		
17	921300400001		Fixing Mount	1		

06 Charger (504646036501)

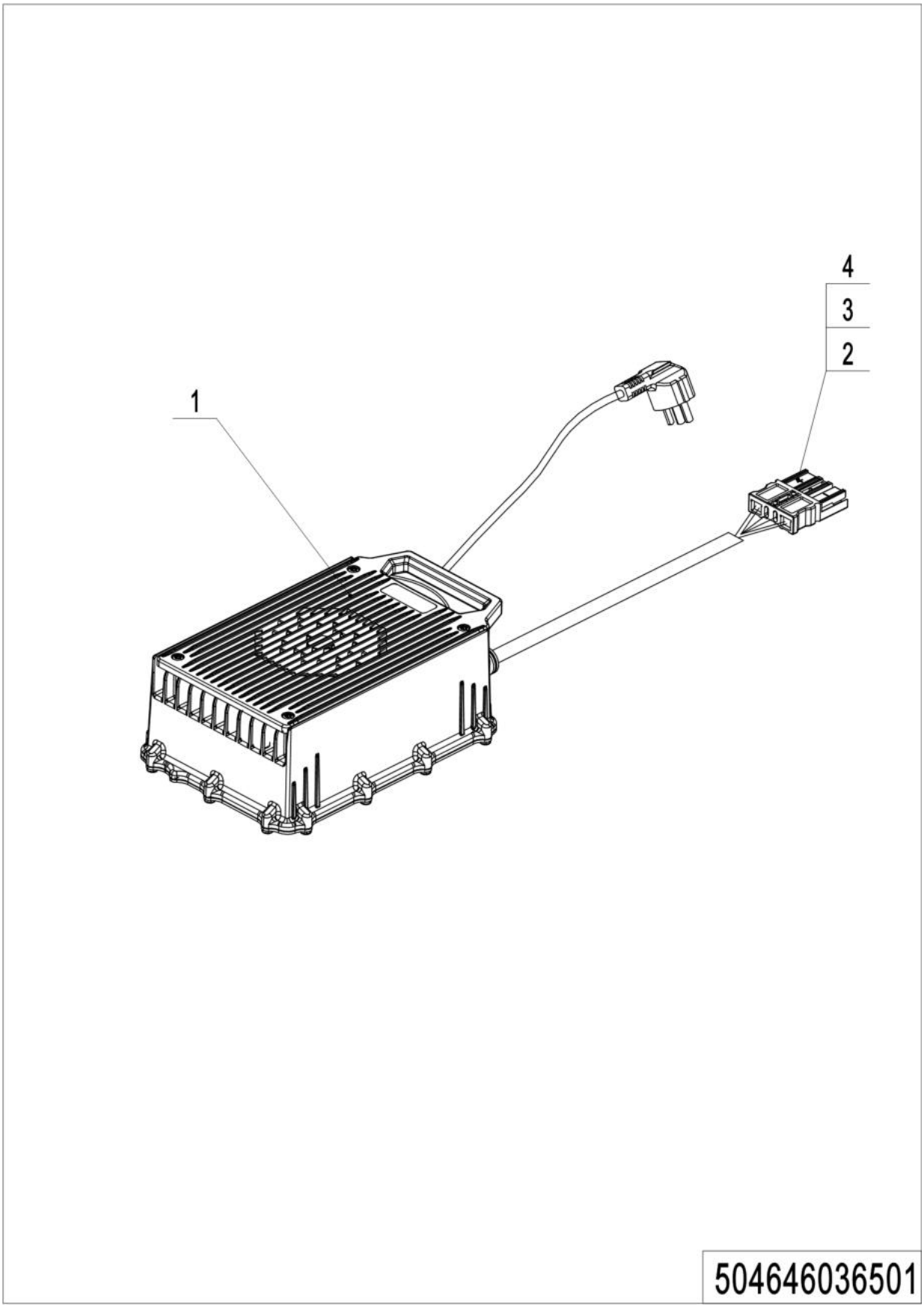

1= Supply as package. 2= Supply with constraints. 3= Phasing-out supply. 4= Supply as assembly. 5= Check other tables.

06 Charger (504646036501)

No.	Item Code	Mark	Item Description	Qty.	Substitute	Note
1	921000200901		Charger24V40A(EU-220V)	1		
2	921500200084		Wire Harness 3x1.5(AS)	1		
2	921500200085		Wire Harness 3x1.5(EU)	1		
2	921500200086		Wire Harness 3x1.5(AUS)	1		
2	921500200087		Wire Harness 3x1.5(ENG)	1		
2	921500200088		Wire Harness 3x1.5(US)	1		
2	921500200089		Wire Harness 3x1.5(AE)	1		
2	921500200090		Wire Harness 3x1.5(ITY)	1		
2	921500200091		Wire Harness 3x1.5(SWE)	1		
2	921500200092		Wire Harness 3x1.5(IL)	1		
2	921500200093		Wire Harness 3x1.5(BRA)	1		
2	921500200094		Wire Harness 3x1.5(SA)	1		
2	921500200095		Wire Harness 3x1.5(JP)	1		
2	921500200096		Wire Harness 3x1.5(IND)	1		
2	921500200097		Wire Harness 3x1.5(PE)	1		
3	920400100057		Connector	1		
4	920400100045		Pin	2		
5	920400100047		Pin	2		

07 lithium battery (504646037001)

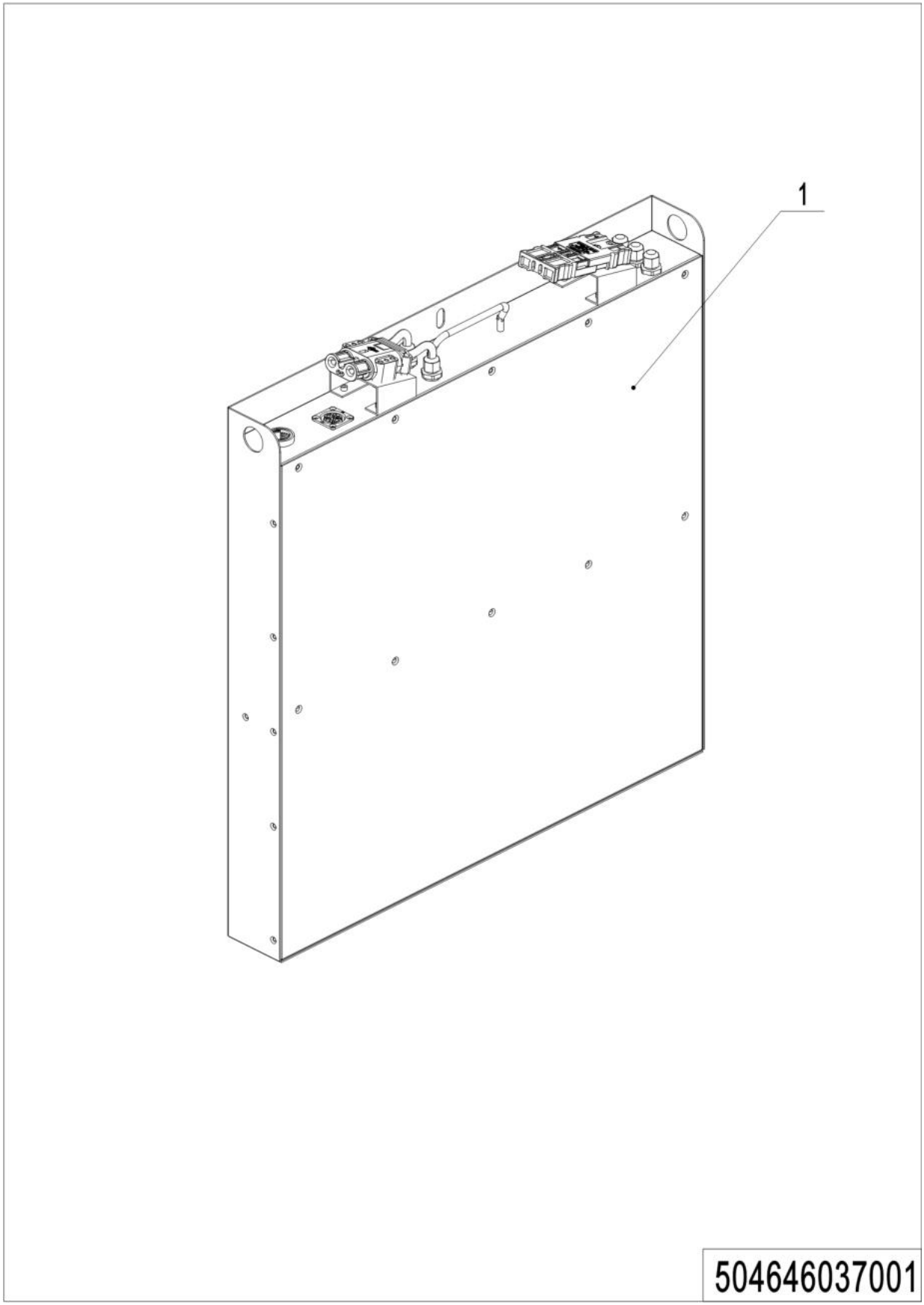

1= Supply as package. 2= Supply with constraints. 3= Phasing-out supply. 4= Supply as assembly. 5= Check other tables.

07 lithium battery (504646037001)

No.	Item Code	Mark	Item Description	Qty.	Substitute	Note
1	920600100734		lithium battery 24V100Ah	1		FDE
1	920600100636		lithium battery 24V100Ah	1		HF

Chapter 6: Special Parts

01 Load Backrest (505646040501)

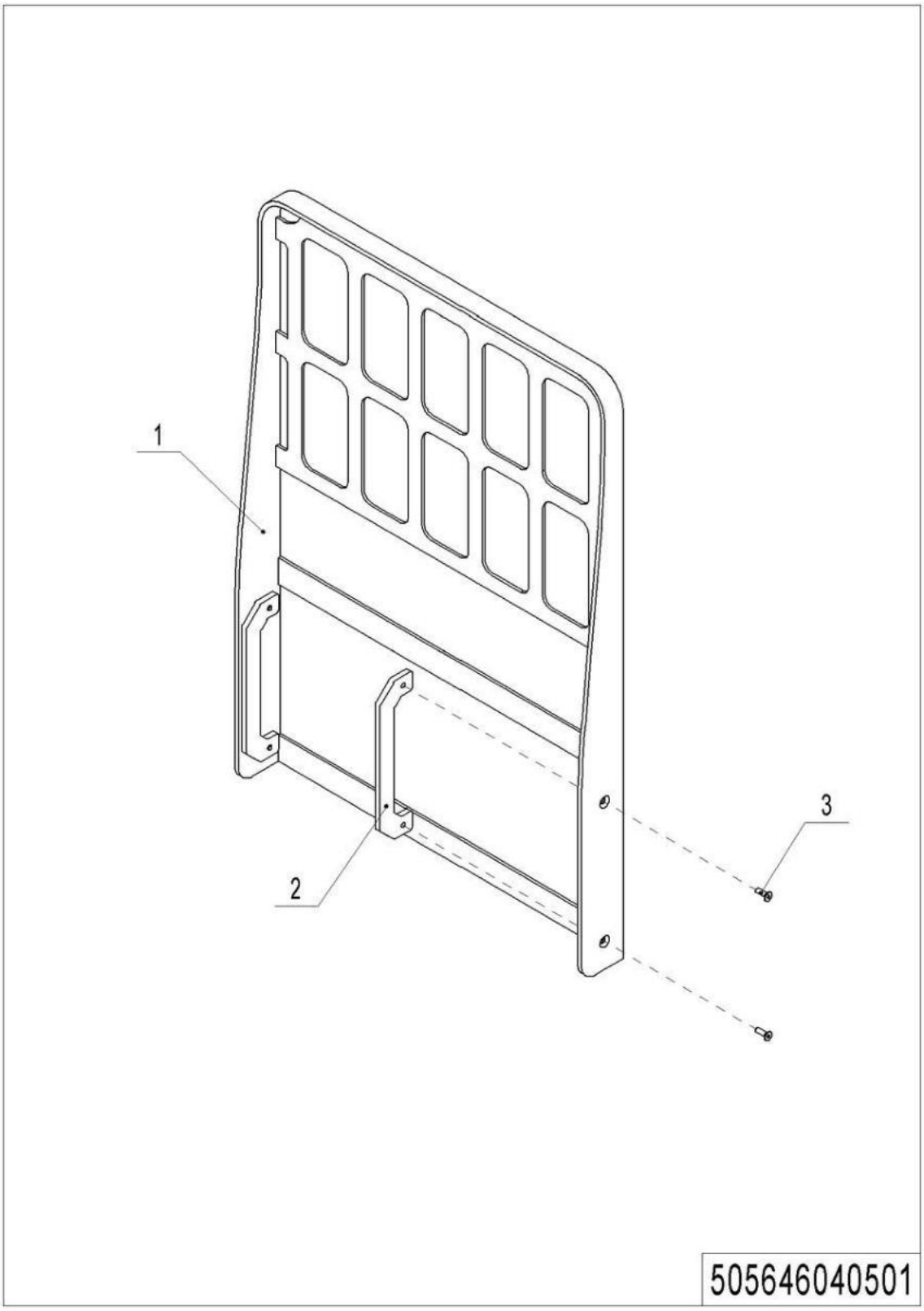

01 Load Backrest (505646040501)

No.	Item Code	Mark	Item Description	Qty.	Substitute	Note
1	505640510001		Load Backrest	1		
2	505640520004		Mounting Plate	2		
3	910200400036	1	Screw	4		

Chapter 7: Others

01 Labels and Decals (EU) (504646047002)

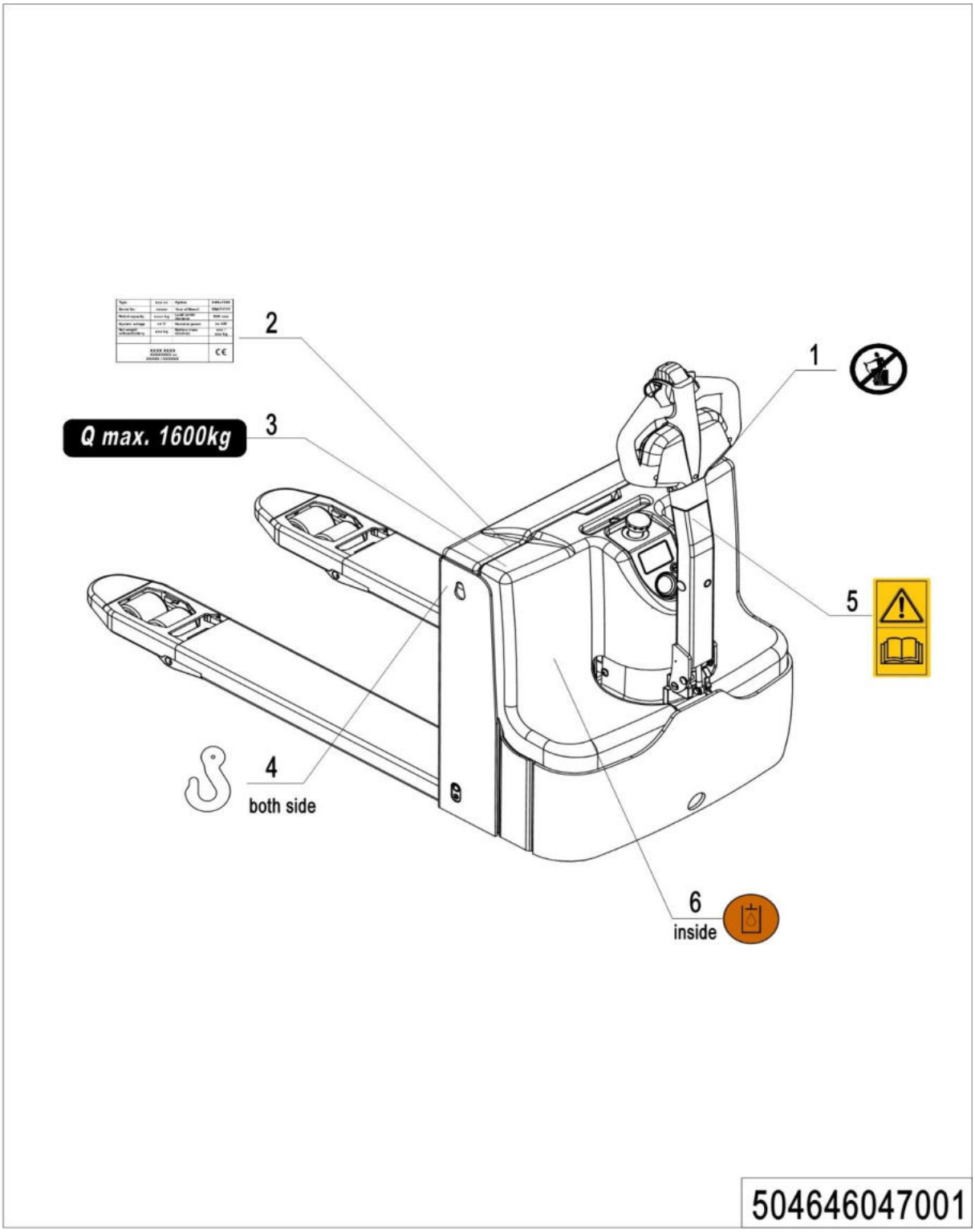

01 Labels and Decals (EU) (504646047002)

No.	Item Code	Mark	Item Description	Qty.	Substitute	Note
1	941200100003		Label	1		
2	504647020002		Truck data plate	1		540x1150-24V100Ah
2	504647020003		Truck data plate	1		685x1150-24V100Ah
3	941200200021		Label	1		
4	941200300001		Label	1		
5	941200300002		Label	1		
6	941200300003		Label	2		

02 Labels and Decals (US) (504646047004)

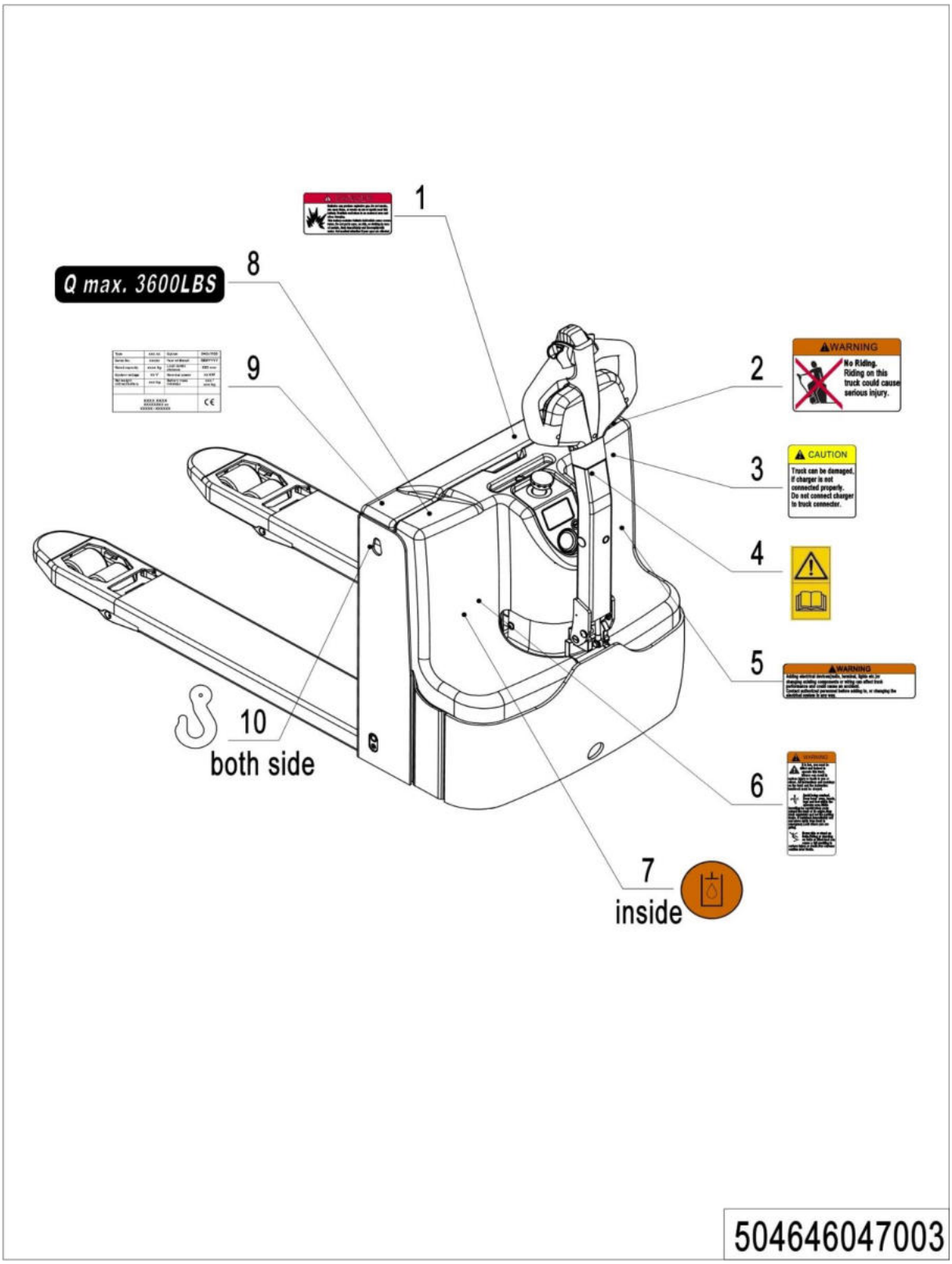

02 Labels and Decals (US) (504646047004)

No.	Item Code	Mark	Item Description	Qty.	Substitute	Note
1	941200100013		Label	1		
2	941200100011		Label	1		
3	941200100012		Label	1		
4	941200300002		Label	1		
5	941200100010		Label	1		
6	941200100009		Label	1		
7	941200300003		Label	1		
8	941200200036		Label	1		
9	504647020002		Truck data plate	1		540x1150-24V100Ah
9	504647020003		Truck data plate	1		685x1150-24V100Ah
10	941200300001		Label	2		

Appendix

01 Electrical Circuit Diagram(F2A) (504646045501)

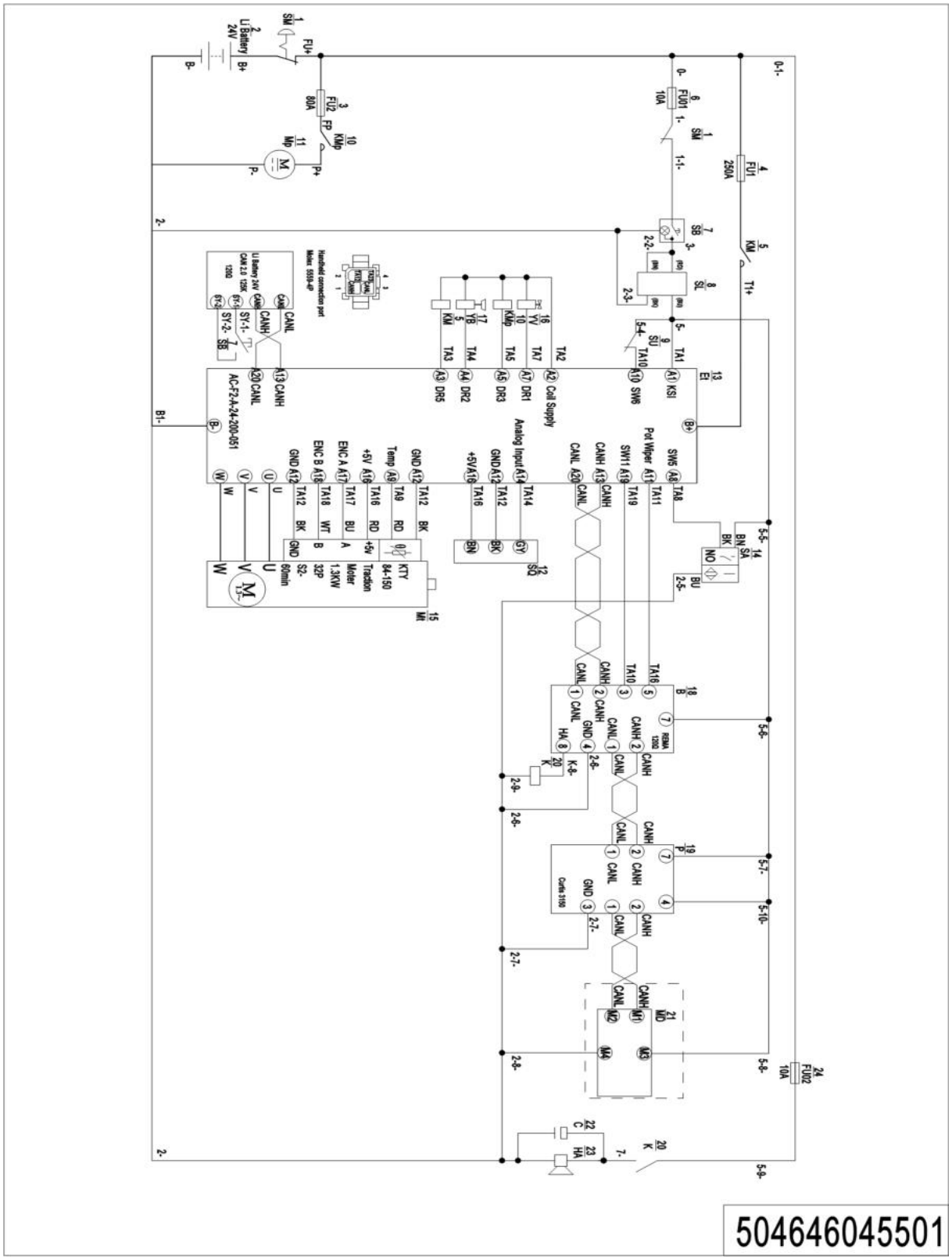

02 Electrical Circuit Diagram(A0E) (504646045502)

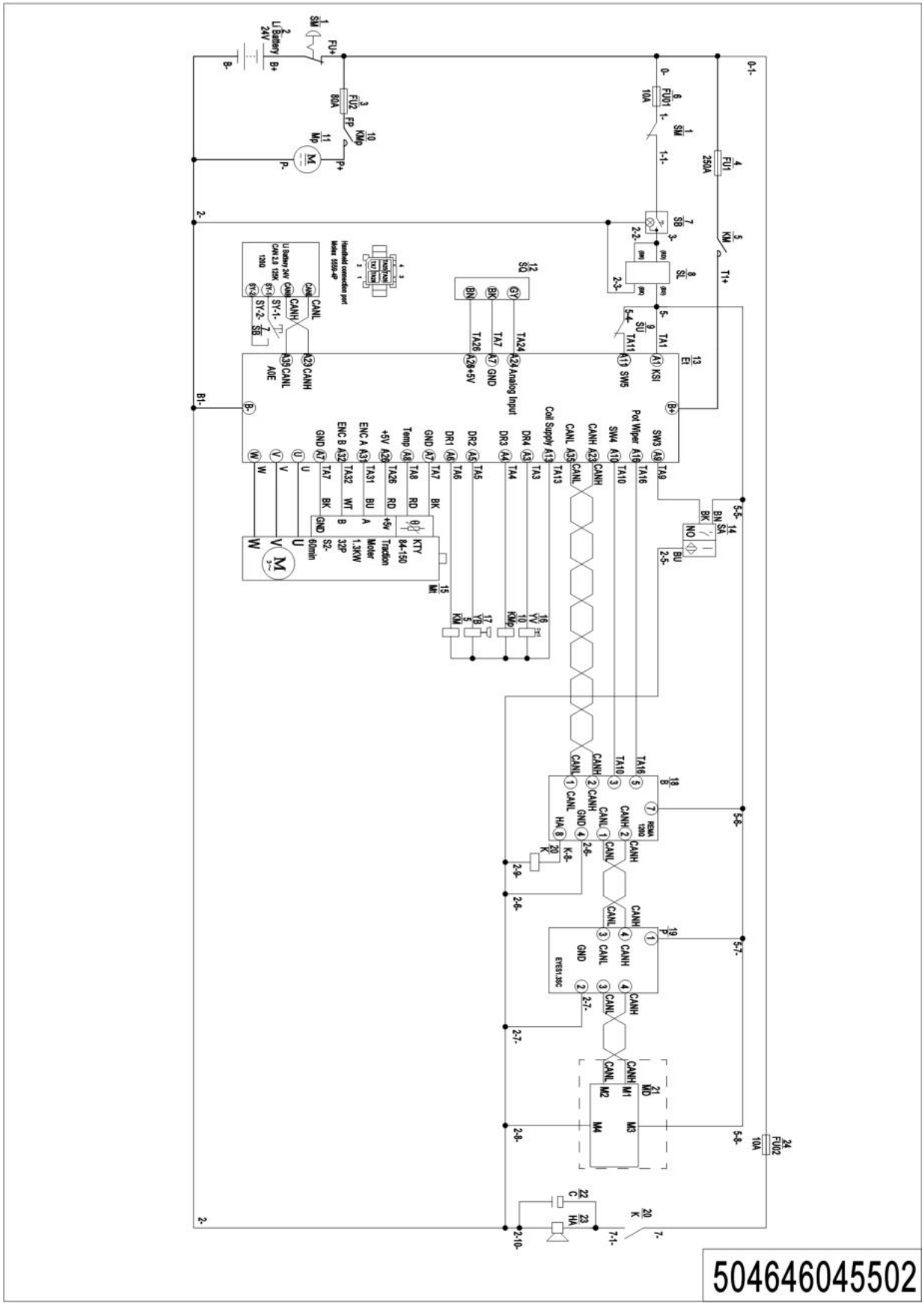

03 Hydraulic Circuit Diagram (504446045503)

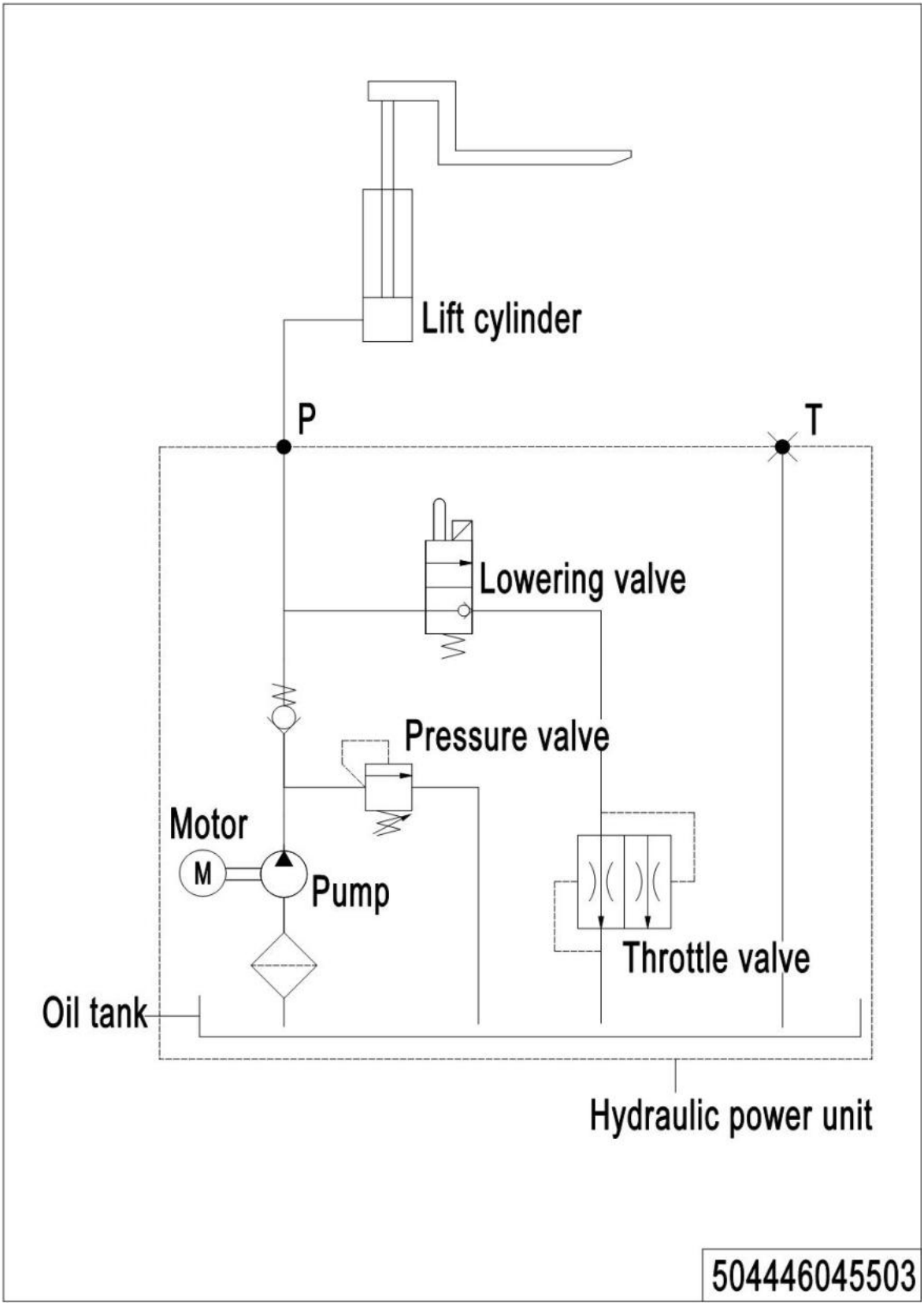

04 Consumable Parts List

No.	Item Code	Item Description	Qty.	Chapter/ Section/ Number
1	504498510000	Seal Kit	1	Chapter 2/01/13.01
2	940500100027	Bushing	2	Chapter 3/02/9
3	940500100019	Bushing	2	Chapter 2/01/2 Chapter 3/02/10
4	940500100032	Bushing	2	Chapter 3/02/11
5	940500100012	Bushing	12	Chapter 3/02/15.04
6	911200100001	Oil Cup	2	Chapter 3/02/15.05 Chapter 4/03/2.01
7	940500200003	Bushing	2	Chapter 4/03/2.01
8	910700500002	Bearing	1	Chapter 4/04/6
9	910700200019	Bearing	2	Chapter 4/03/2.04 Chapter 4/04/17.01
10	920100200002	Fuse	1	Chapter 5/03/7
11	920100100007	Fuse	1	Chapter 5/03/10
12	920100100004	Fuse	1	Chapter 5/03/11