NOBLELIFT

INSTRUCTION HANDBOOK

Electric Pallet Truck

PT16L-Li

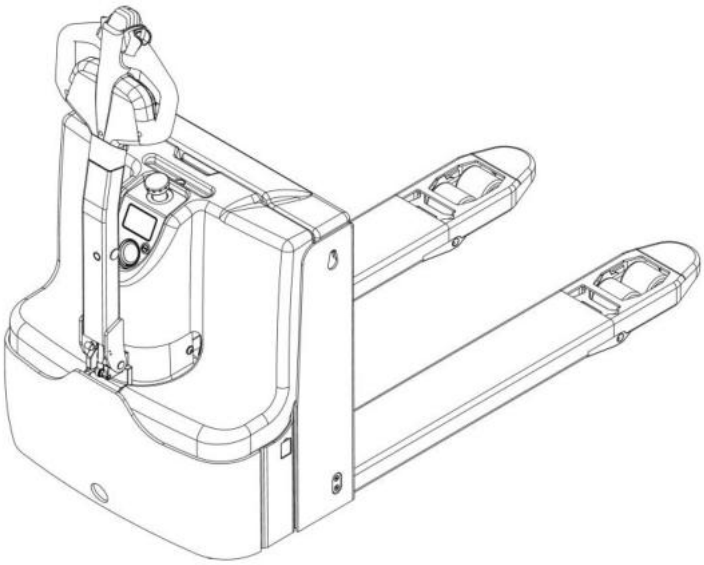

WARNING

Do not use the pallet truck before reading and understanding these operating instructions.

NOTE:

- **Please check the designation of your present type at the last page of this document as well as on the ID-plate.**
- **Keep for future reference.**

Version 05/2024

PT 16L-Li-SMS-002-EN

FOREWORD

Before operating the truck, read this ORIGINAL INSTRUCTION HANDBOOK carefully and understand the usage of the truck completely. Improper operation could create danger.
This handbook describes the usage of different electric pallet trucks. When operating and servicing the truck, make sure, that it applies to your type.

Chapter 11 describes specialized stipulations and regulations for the American market. Follow these instructions and stipulations if you operate the truck within the American market!

Keep this handbook for future reference. If this or the warning/ caution labels are damaged or got lost, please contact your local dealer for replacement.

ATTENTION:

- Environmentally hazardous waste, such as batteries, oil and electronics, will have a negative effect on the environment, or health, if handled incorrectly.

- The waste packages should be sorted and put into solid dustbins according to the materials and be collected disposal by local special environment protection bureau. To avoid pollution, it's forbidden to throw away the wastes randomly.

- To avoid leaking during the use of the products, the user should prepare some absorbable materials (scraps of wooden or dry duster cloth) to absorb the leaking oil in time. To avoid second pollution to the environment, the used absorbable materials should be handed in to special departments in terms of local authorities.

- Our products are subject to ongoing developments. Because this handbook is only for the purpose of operating /servicing the pallet truck, therefore please have understanding, that there is no guarantee out of particular features out of this handbook.

NOTE: On this manual, the left sign means warning and danger, which can lead to death or serious injury if not followed.

Copyright

The copyright remains with the company, mentioned on the CE- certificate at the end of this document or, if sold within the USA, with the company, mentioned on the company sticker.

TABLE OF CONTENTS

1. CORRECT APPLICATION 4
2. DESCRIPTION OF THE PALLET TRUCK 5
   a. Overview of the main components 5
   b. Main technical data 5
   c. Description of the safety devices and warning labels (Europe and other, excepting USA) 8
   d. Identification plate 9
3. WARNINGS, RESIDUAL RISK AND SAFETY INSTRUCTIONS 10
4. COMMISSIONING, TRANSPORTING, DECOMMISSIONING 11
   a. Commissioning 11
   b. Lifting/ transportation 11
   c. Decommissioning 12
5. DAILY INSPECTION 13
6. OPERATING INSTRUCTIONS 13
   a. Parking 13
   b. Lifting 13
   c. Lowering 14
   d. Travelling 14
   e. Steering 15
   f. Braking 15
   g. Malfunctions 15
   h. Emergency 15
7. Pin-code panel 16
   a. Introduction 16
   b. Main codes and functions 16
8. BATTERY CHARGING AND REPLACEMENT 17
   a. Replacement 18
   b. Battery indicator 18
   c. Charging 21
   d. Description of the lithium-ion battery 21
   e. Battery Decals 22
   f. Safety Instructions, Warning Indications and other Notes 23
9. REGULAR MAINTENANCE 29
   a. Maintenance checklist 29
   b. Lubricating points 31
   c. Check and refill hydraulic oil 31
   d. Checking electrical fuses 32
10. TROUBLE SHOOTING 33

11. WIRING/ CIRCUIT DIAGRAM 34
a. Electrical circuit diagram 34
b. Electrical circuit diagram 36
c. Hydraulic circuit 38
12. SPECIALIZED STIPULATIONS FOR THE US-AMERICAN MARKET 39
a. Foreword/ Compliance 39
b. Description warning labels (only US-market) 40
c. Technical data for US market 42
13. DECLARATION OF CONFORMITY(valid, if sold within the EU) 44

1. CORRECT APPLICATION

It is only allowed to use this electric pallet truck according to this instruction handbook.

The trucks described in this handbook are self propelled electric power pallet trucks, with electrically powered low height lifting function as well for trucks with mast-lift and initial lift. The trucks are designed to lift, lower and transport palletized loads.

A wrong usage can cause human injuries or can damage equipment.
The operator/ the operating company has to ensure the correct usage and has to ensure, that this pallet truck is used only by staff, which is trained and authorized to use this truck.

The pallet truck has to be used on substantially firm, smooth, prepared, level and adequate surfaces. The truck is intended to be used for indoor applications with ambient temperatures between +5°C and + 40°C and for various transportation applications without crossing permanent obstacles or potholes. Operating on ramps is not allowed. While operating, the load must be placed approximately on the longitudinal centre plane of the truck.
Lifting or transporting people is forbidden.

If used on tail lifts or loading ramps, please ensure that these are used correctly according to the operating instructions.

The capacity is marked on capacity sticker as well on the Identification plate. The operator has to consider the warnings and safety instructions.
Operating lighting must be minimum 50 Lux.

<u>Modification</u>
No modifications or alterations to this pallet truck which may affect, for example, capacity, stability or safety requirements of the truck, shall be made without the prior written approval of the original truck manufacturer, its authorized representative, or a successor thereof. This includes changes affecting, for example braking, steering, visibility and the addition of removable attachments. When the manufacturer or its successor approve a modification or alteration, they shall also make and approve appropriate changes to capacity plate, decals, tags and operation and maintenance handbooks.

By not observing these instructions, the warranty becomes void.

2. DESCRIPTION OF THE PALLET TRUCK

a. Overview of the main components

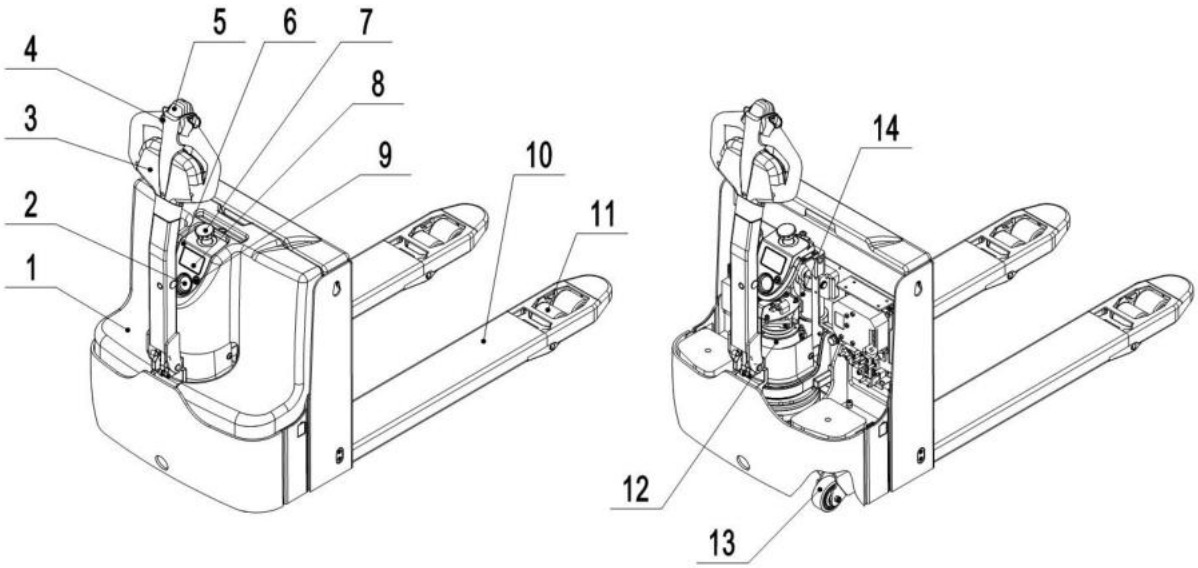

Fig. 1: Overview main components

1. Electrical box cover
2. Battery discharge Indicator
3. Tiller
4. Accelerator
5. Safety (belly) button
6. Instrument board cover
7. Emergency button
8. Coded Lock
9. Button
10. Fork chassis
11. Load wheels
12. Drive wheel
13. Castors
14. Hydraulic cylinder

b. Main technical data

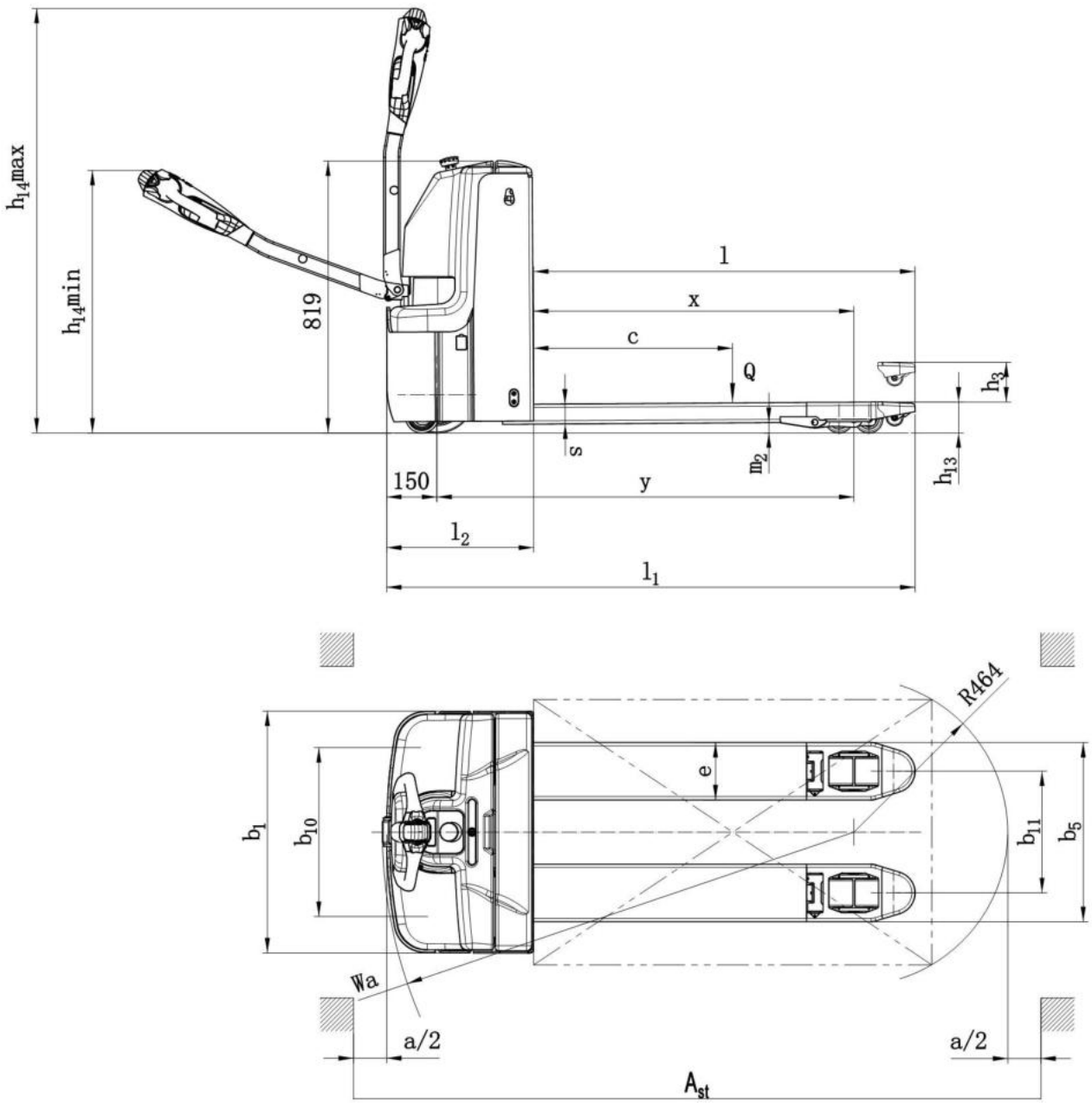

Fig. 2: Technical data PT 16L-Li

Table 1: Main technical data for standard version

Type sheet for industrial truck acc. to VDI 2198				2024.05.15
Distinguishing mark	1.2	Manufacturer`s type designation		PT16L-Li
	1.3	Drive		Battery
	1.4	Operator type		Pedestrian
	1.5	Load Capacity / rated load	Q(kg)	1600
	1.6	Load centre distance	c(mm)	600
	1.8	Load distance ,centre of drive axle to fork	x(mm)	966
	1.9	Wheelbase	y(mm)	1258
Weight	2.1	Service weight	kg	357
	2.2	Axle loading, laden front/rear	kg	991/966
	2.3	Axle loading, unladen front/rear	kg	295/62

Tyres, chassis	3.1	Tires		PU	
	3.2	Tire size,front	∅ x w (mm)	∅230×70	
	3.3	Tire size,rear	∅ x w (mm)	∅84×84/∅82×110[1)]	
	3.4	Additional wheels(dimensions)	∅ x w (mm)	∅100×40	
	3.5	Wheels,number front/rear(x=driven wheels)		1×+2/4	
	3.6	Tread, front	b_{10} (mm)	510	
	3.7	Tread, rear	b_{11} (mm)	367	512
Dimensions	4.4	Lift	h_3 (mm)	120	
	4.9	Height of tiller in drive position min./ max.	h_{14} (mm)	765 / 1250	
	4.15	Height, lowered	h_{13} (mm)	85/83[2)]	
	4.19	Overall length	l_1 (mm)	1590	
	4.20	Length to face of forks	l_2 (mm)	440	
	4.21	Overall width	b_1 (mm)	729	
	4.22	Fork dimensions	s/e/l	60/173/1150	
	4.25	Distance between fork- arms	b_5 (mm)	540	685
	4.32	Ground clearance, centre of wheelbase	m_2 (mm)	25/28[3)]	
	4.34	Aisle width for pallets800X1200 lengthways (200mm safe distance)	Ast(mm)	2086	
	4.35	Turning radius	Wa (mm)	1422	
Performance data	5.1	Travel speed, laden/ unladen	km/h	*5.7/6.0*	
	5.2	Lift speed, laden/ unladen	m/s	0.025/0.035	
	5.3	Lowering speed, laden/ unladen	m/s	0.035/0.030	
	5.8	Max. gradeability, laden/ unladen	%	8/15	
	5.10	Service brake		Electro magnetic	
Electric- engine	6.1	Drive motor rating S2 60min	kW	1.3	
	6.2	Lift motor rating at S3 10%	kW	0.8	
	6.3	Battery acc. to DIN 43531/ 35/ 36 A, B, C, no		NO	
	6.4	Battery voltage, nominal capacity K5	V/Ah	24/100	
	6.5	Battery weight	kg	29.5±0.5	
	6.6	Energy consumption acc. to VDI cycle	kWh/h	0.147	
Addition data	8.1	Type of drive control		AC -Speed Control	
	8.4	Sound level at driver`s ear acc. to EN 12053	dB(A)	<70	

Notes:1) When h_{13} in 83mm,select this single wheel;

2) With ∅ 82×110 single wheel;

3) When h_{13} is 83mm,m_2 is 28mm.

c. Description of the safety devices and warning labels (Europe and other, excepting USA)

For the USA –market, the description of the safety and warning labels is mentioned in chapter 11.

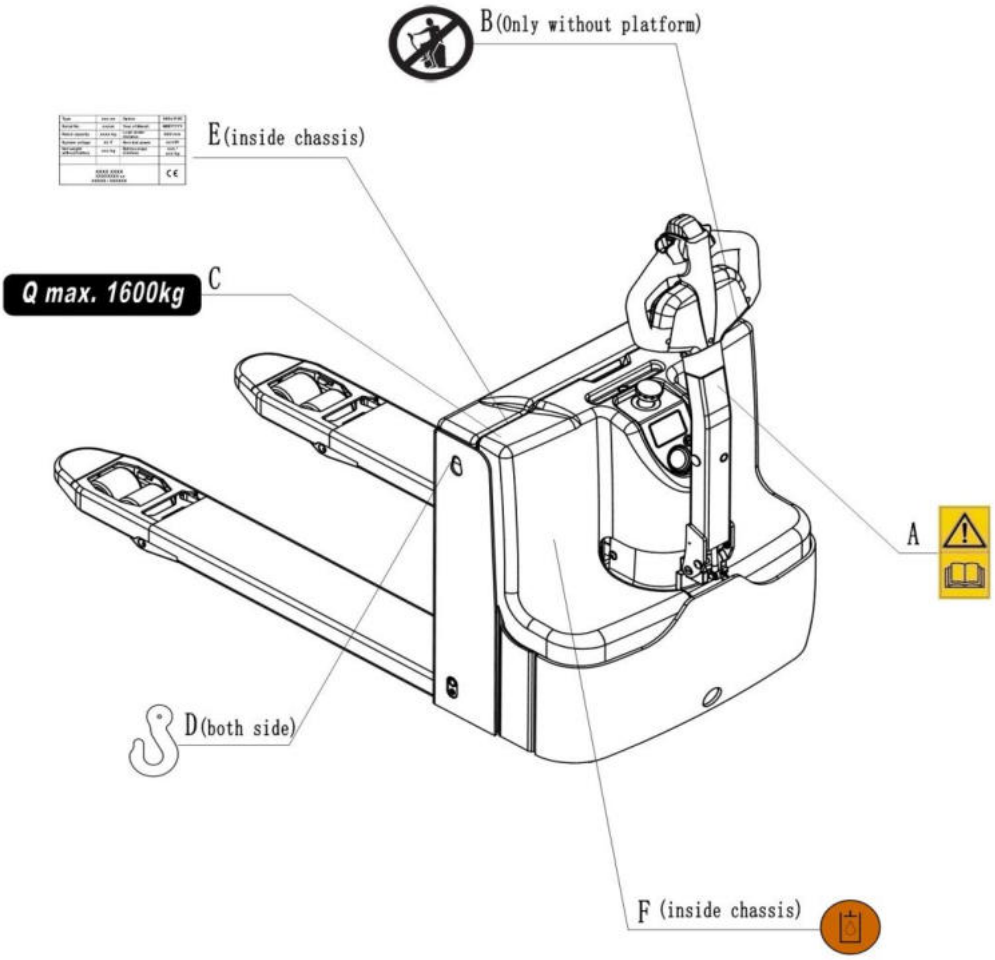

Fig. 3: Safety and warning labels PT 16L-Li

A Sticker to read and follow this instruction
B “No passengers” decal
C Capacity sticker
D Crane hook label
E Identification plate (ID-plate)
F Sign oil filling point

The truck is equipped with an emergency switch (7) which stops all lifting-, lowering-, driving- functions and engages the failsafe electromagnetic brake when it is pushed.
The truck is equipped with a safety (belly) button (5) which switches the driving function away from the operator, if the truck travels towards the operator and the tiller is activated in the tillers operating zone. Follow also the instructions given on the decals. Replace the decals if they are damaged or missing.

d. Identification plate

1 Designation, type
2 Serial number
3 Rated capacity in kg
4 Supply voltage in V
5 Own mass (self weight) in kg without battery
6 Name and address of manufacturer)
7 Battery weight minimum/ maximum
8 Nominal power in kW
9 Load center distance
10 Manufacturing date
11 Option

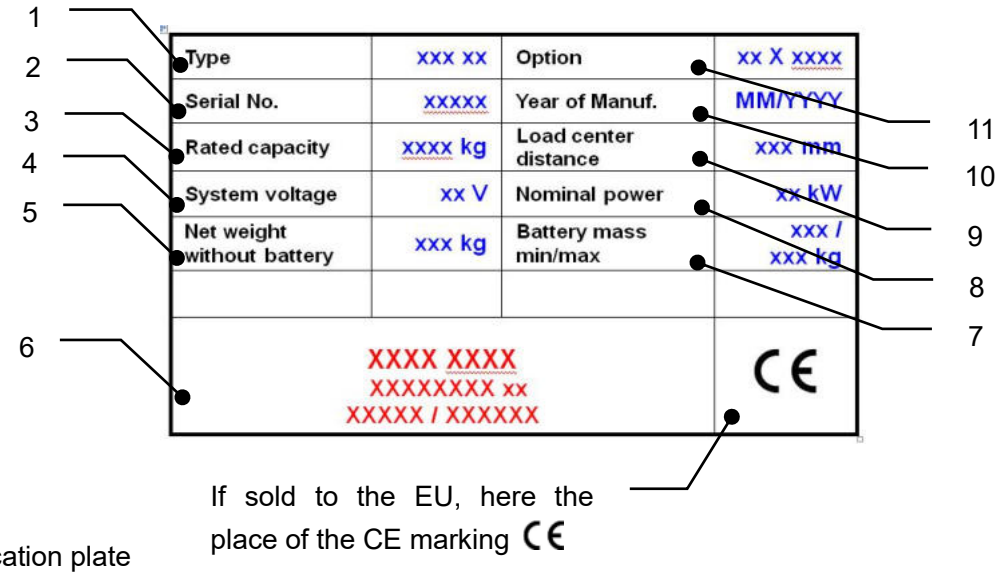

If sold to the EU, here the place of the CE marking CE

Fig. 4: Identification plate

3. WARNINGS, RESIDUAL RISK AND SAFETY INSTRUCTIONS

DO NOT

- Put foot or hand under or into the lifting mechanism.
- Allow other person than the operator to stand in front of or behind the truck when it is moving or lifting/lowering.
- Overload the truck.
- Put foot in front of the wheels, injury could result.
- Lift people. People could fall down and suffer severe injury.
- Push or pull loads
- Use this truck on ramps
- Side or end load. Load must be distributed evenly on the forks.
- Use the truck with unstable, unbalanced not stable load.
- Use truck without manufacturer's written consent.
- Lifted loads could become unstable at wind forces. In the case of wind forces do not lift the load if there is any influence to the stability

Watch difference in floor levels when driving. Load could fall down or the truck could get uncontrollable.

Keep watching the condition of load. Stop operating the truck if load becomes unstable.

Brake the truck and activate the emergency button (7) by pushing when sliding load on or off the truck. If the truck has any malfunctions, follow chapter 6.

Practice maintenance work according to regular inspection. This truck is not designed to be water resistant. Use the truck under dry condition. Prolonged continuous operation might cause damage of the power pack. Stop operation if temperature of hydraulic oil is too high.

- When operating the electric pallet truck, the operator has to wear safety shoes.
- The truck is intended to be used for indoor applications with ambient temperatures between +5°C and + 40°C.
- The operating lighting must be minimum 50 Lux.
- It is not allowed to use the truck on ramps.
- To prevent unintended sudden movements when not operating the tuck (i.e. from another person, etc.) switch of f the truck when not operating it.

4. COMMISSIONING, TRANSPORTING, DECOMMISSIONING

a. Commissioning

Table 2: Commissioning data

Type	PT 16L-Li
Commissioning weight [kg]	357
Dimensions [mm]	1590x729x1334

After receiving our new pallet truck or for re-commissioning you have to do following before (firstly) operating the truck:

- Check if are all parts included and not damaged
- Eventually installation of the multifunction tiller
- Eventually installation and charging the batteries (follow chapter 7)
- Do the work according to the daily inspections as well as functional checks.

b. Lifting/ transportation

For transporting, remove the load, lower the forks to the lowest position and fix the truck safe with dedicated lifting gear according to the following figures.

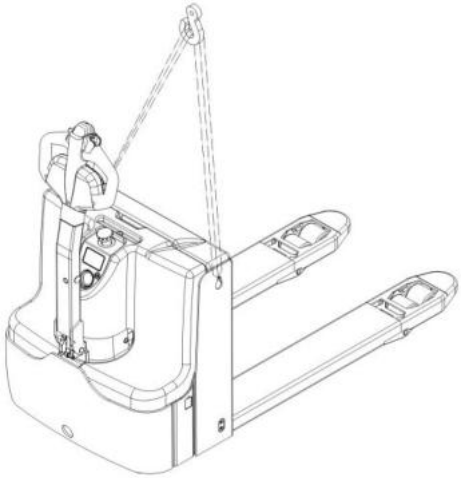

Fig. 5: Lifting with a crane

Lifting

USE DEDICATED CRANE AND LIFTING EQUIPMENT
DO NOT STAND UNDER THE SWAYING LOAD
DO NOT WALK INTO THE HAZARDOUS AREA DURING LIFTING

Park the truck securely and lash the truck according to the points identified in fig. 5. Lift the truck to its destination and place the truck securely before removing the lifting gear. The lashing points are according to the fig. 5.

.

Transportation

DURING TRANSPORTATION ON A LORRY OR TRUCK ALWAYS FASTEN THE TRUCK SECURELY

Lower the forks and park the truck securely.
Fasten the truck according to fig. 6 by fixing dedicated lashing belts to each side of the trucks crane hook holes and fasten the other side at the transporting truck.

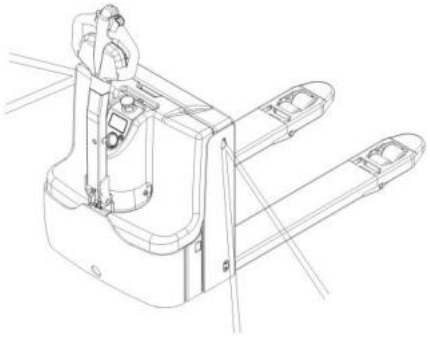

Fig. 6: fixing points

c. Decommissioning

For storage, remove the load, lower the truck to the lowest position, grease all in this handbook mentioned greasing points (regular inspection), eventually protect the truck against corrosion and dust. Remove the batteries and jack the truck safely, so that there will be no flattening after storage.
For final decommissioning hand the truck to a designated recycling company. Oil, batteries and electric components must be recycled due to legal regulations.

5. DAILY INSPECTION

This chapter describes pre-shift checks before putting the truck into operation.
Daily inspection is effective to find the malfunction or fault on this truck. Check the truck on the following points before operation.
Remove load from truck and lower the forks.

DO NOT USE THE TRUCK IF ANY MALFUNCTION IS FOUND.

- Check for scratches, deformation or cracks.
- Check if there is any oil leakage from the cylinder.
- Check the vertical creep of the truck.
- Check the smooth movement of the wheels.
- Check the function of the emergency brake by activating the emergency button.
- Check, the tiller arm- switch braking function
- Check the lifting and lowering functions by operating the buttons.
- Check if all bolts and nuts are tightened firmly.
- Visual check if there are any broken hoses or broken electric wires.

6. OPERATING INSTRUCTIONS

BEFORE OPERATING THIS TRUCK, PLEASE FOLLOW THE WARNINGS AND SAFETY INSTRUCTIONS (CHAPTER 3).

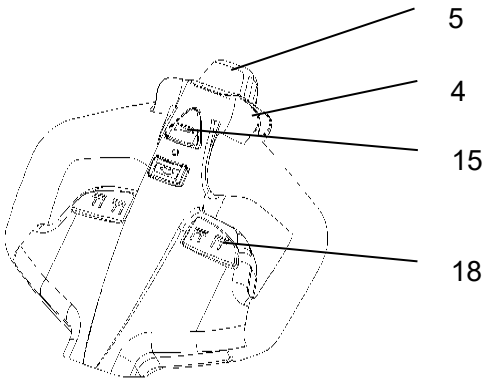

Fig.7: Tiller operating controls

Make sure, that the load is palletized and stable and that the daily inspection is carried out.

Press the start-stop button switch (9), manually enter the password on the password lock panel (8), and press "OK" to start the vehicle. The second uses to press the start-stop button switch (9), and uses the ID card to swipe the card near the combination lock sensing area to start the vehicle

Press the horn button (15) to activate the sound alarm signal.

a. Parking

DO NOT PARK THE TRUCK ON INCLINED SURFACES

The truck is equipped with an electromagnetic failsafe stopping and parking brake.
Always lower the forks fully. Press the emergency switch (7),

b. Lifting

DO NOT OVERLOAD THE TRUCK! THE MAXIMUM CAPACITY IS 1600kg（PT 16L-Li），

Travel with the lowered forks fully underneath the pallet until the load and press the lifting button (18) until you reached the desired lifting height.

c. Lowering

Press the lowering button (18) carefully.
Lower the load until the forks are clear of the pallet, then drive the truck carefully out of the load unit.

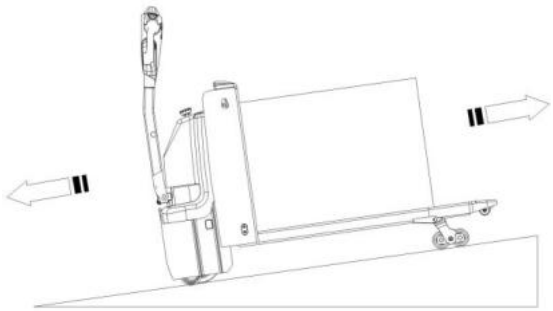

Fig. 8: Load facing uphill

d. Travelling

TRAVEL ON INCLINES ONLY WITH THE LOAD FACING UPHILL.
DO NOT TRAVEL ON INCLINES MORE THAN SPECIFIED WITH THE TECHNICAL DATA.

Press the button switch (9) to start the vehicle by the combination lock, move the tiller to the operating zone (‘F’, fig.9).
Turn the accelerator button to the desired direction forward ‘Fw.’ or backwards Bw.’(fig. 9).

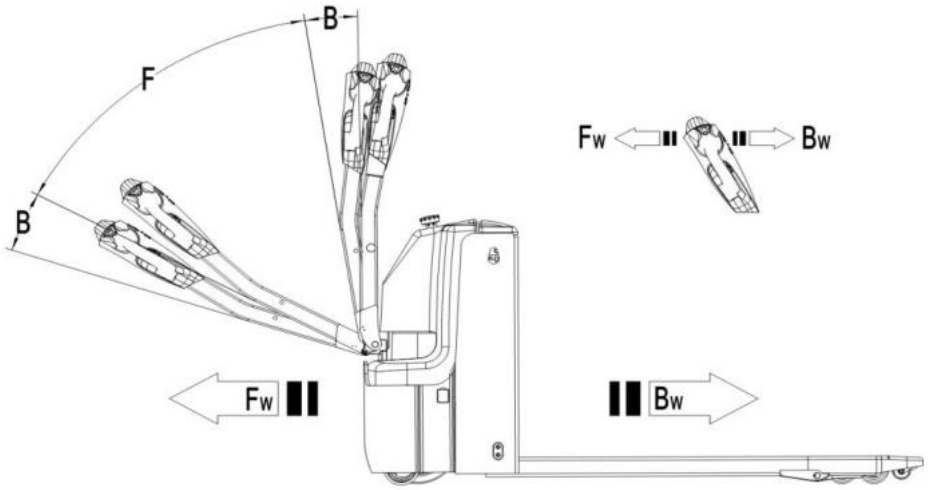

Fig. 9: Operating direction

Control the travelling speed by moving the accelerator button (4) carefully until you reached the desired speed. If you move the accelerator button back to the neutral position, the controller decelerates the

truck until the truck stops. If the truck stopped, the parking brake will be engaged.
Drive carefully the truck to the destination. Watch the route conditions and adjust the travelling speed with the accelerator-button.

e. Steering

You steer the truck by moving the tiller to the left or right side.

f. Braking

THE BRAKING PERFORMANCE DEPENDS ON THE TRACK CONDITONS AND TRHE LOAD CONDITONS OF THE TRUCK

The braking function can be activated on several ways:

- By moving the accelerator button (4) back to the initial ‘0’ position or by releasing the button, the regenerative braking is activated. The truck brakes until it stops.
- By moving the accelerator button (4) from one driving direction directly to the opposite direction, the truck brakes regenerative until it starts travelling into the opposite direction.
- The truck brakes, if the tiller is moved up or down to the braking zones (‘B’). If the tiller is released, the tiller moves automatically up to the upper baking zone (‘B’). The truck brakes until it stops.
- The safety (belly) button (5) prevents the operator from being crushed. If this button is activated, the truck decelerates and or starts travelling into the backwards direction (‘Bw.’) for a short distance and stops. Please consider, that this button also operates, if the truck is not travelling and the tiller is in the operating zone.

g. Malfunctions

If there are any malfunctions or the truck is inoperative, please stop using the truck and activate the emergency button (7) by pushing it. If possible, park the truck on a safe area and remove the key switch (8).Inform immediately the manager and, or call your service. If necessary, tow the truck out of the operating area by using dedicated towing/ lifting equipment.

h. Emergency

In emergencies or in the event of tip over (or off dock), keep safe distance immediately. If possible push the emergency button (7). All electrical functions will be stopped.

7. Pin-code panel

PT16L-Li(PT36L-Li) is equipped with the pin-code panel and RFID card.

a. Introduction

Pin-code panel is an electronic system which is similar with an electronic alarm system. Truck will not be able to operate before entering a correct access code, the main function is to prevent unauthorized operation. In addition to the convenience of operation, it is also of great help to the anti-theft and security of the machine.

b. Main codes and functions

PT16L-Li is configured with a pin-code lock and an ID card. It supports up to 24 ID cards and 1 set of access code. The access code consists of four digits with numbers ranging from 0-99.

ID card access

Place the ID card close to the pin-code panel. If the ID card is a valid ID card, the pin-code lock will emit a brief buzzer, followed by a blue indicator light, indicating that the pin-code lock is working normally, that is, the electric lock switch signal is output normally. (The red indicator flashes when the card is incorrectly operated).

Pin-code access

There are two types of access codes of the pin-code lock, one is the default user password “1234” for the operator. The other one is the administrator access code “3131” for setting a new user password, see the following steps:

- Enter access code “3131”, press “OK” key.
- Enter the control code*“ 3”* again, press “OK” key.
- Enter new password, and press “OK” key, the original password is updated.

In case you need to reset the password, please follow the procedures below:

- Enter *“*3131*”,* press “OK” key.
- Enter the control code*“ 3” again,* press “OK” key.
- Password and ID card is reset.

In case you need additional ID cards, please follow the procedure below:

- Enter *“*3131*”,* press “OK” key.
- Enter the control code "0", press “OK” key.
- Upload the new ID cards within 5 seconds by placing it near the ID card mark of the pin-code panel.
- This pin-code panel supports maximum 24 cards.

8. BATTERY CHARGING AND REPLACEMENT

- Only qualified personnel are allowed to service or charge the batteries. The instructions of this handbook and from the battery- manufacturer must be observed.
- The batteries are liquid acid traction batteries. Optional maintenance free batteries are available; for these batteries re- filling is prohibited.
- Recycling of batteries undergoes national regulations. Please follow these regulations.
- By handling batteries, open fire is prohibited, gases could cause explosion!
- In the area of battery charging neither burning materials nor burning liquids are allowed. Smoking is prohibited and the area must be ventilated.
- Park the truck securely before starting charging or installing/changing the batteries
- Before finishing the maintenance work, make sure, that all cables are connected correctly and that there are no disturbing towards other components of the truck.

Battery types

Depending on the version, the truck is equipped with different battery types. The following tables show which combinations are intended as standard, indicating the capacity.
The battery weights can be taken from the battery data plate.

Manufacturer`s type designation	Battery type	Capacity	Weight	Max. dimensions
PT16L-Li	24 V battery Li-Ion	100Ah	29.5kg	550x560x68mm

LITHIUM BATTERIES ARE ALLOWED FOR APPLICATION.
THE WEIGHT OF THE BATTERIES HAS AN INFLUENCE TO THE TRUCKS OPERATING BEHAVIOR.
PLEASE CONSIDER THE MAXIMUM OPERATING TEMPERATURE OF THE BATTERIES.

a. Replacement

PT 16L-Li

Park the vehicle safely, press the start-stop button switch (9), and press the emergency stop switch (7) to turn off the vehicle.
Open the battery case lid and keep it upright. Remove the handle (17), unplug the battery connector (16) and then lift out the battery.

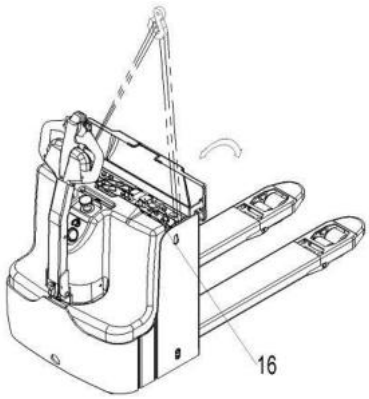

Fig. 10: Battery replacement PT 16L-Li

The installation is in the reverse order of the removal. Please connect the positive terminals firstly. Otherwise the tuck could be damaged.

b. Battery indicator

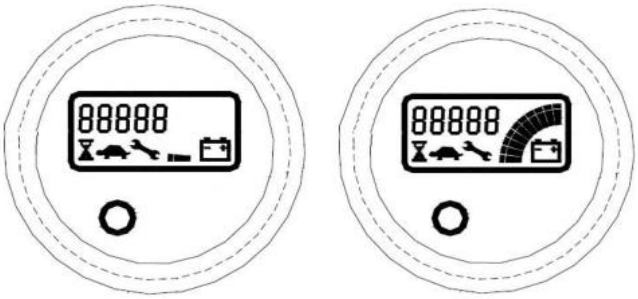

Battery discharged Battery charged

Fig. 11: Battery discharge indicator

Hour meter
An alpha-numeric liquid crystal display is fitted in the centre of the unit that shows the hours worked. The display is backlight (the backlight is normally lighted).
Alarms
The same display can also indicate the alarm state, showing a code corresponding to the type of alarm. To attract attention, the red LED will start blinking when an alarm is generated.

Software version
When the key switch is initially closed, in case truck is equipped with pin-code panel, please press start-button and enter the Pin-code or use RFID access card, then display shows the eprom version for a few seconds (EPXXX, where XXX represents the version) and traction controller eprom version appears, each one for 2 seconds. Simultaneously the symbol of a monkey wrench appears.

Battery State of charge

The battery's state of charge indication is integrated in the LCD display; it is shown by ten notches. Each notch represent the 10% of the battery charge. As the battery becomes discharged, the notches turn off progressively, one after the other, in proportion to the value of the residual battery charge. This value, sent to the MDI-CAN by the controller via CAN-BUS, is displayed in the tester menu of the Zapi console connected to the controller. When BATTERY LOW alarm appears on the controller, the battery symbol which is under the notches blinks.

Turtle Symbol:

It is normally off, when it appears (fixed) it shows activation of the “soft” mode of the truck, in which maximum speed and acceleration are reduced.

Monkey Wrench Symbol:

It is normally off, when it appears (fixed) it shows the request of programmed maintenance or the alarm state. In this case the relative code will be displayed. The information supplied by the MDI-CAN can be extremely useful. Failures can be quickly identified by the operator or service technician thereby finding the fastest solution to the problem.

Hourglass Symbol:

It is normally off, it blinks when the hour meter is working.

Battery indicator（CURTIS）

Normal Malfunction

Fig. 12: Battery indicator

The main interface displays as shown in the figure above.

Hour meter

The digital counter after Hourglass Symbol indicates the working hour of the truck.

Battery state of charge
It displays the battery symbol and the current battery level. The charge status of the battery is displayed in ten increments. Each is represented by a rectangle that corresponds to 10% of the battery charge.

Monkey Wrench Symbol
It displays the current fault code (TRA is for drive controller failure, STR is for steering controller failure).

Operating mode and truck speed
The number in the center of the battery indicator indicates the traveling speed (km/h).

Working state
The upper left corner of the battery indicator indicates the state of truck and the its mode.

Battery indicator（DALA）

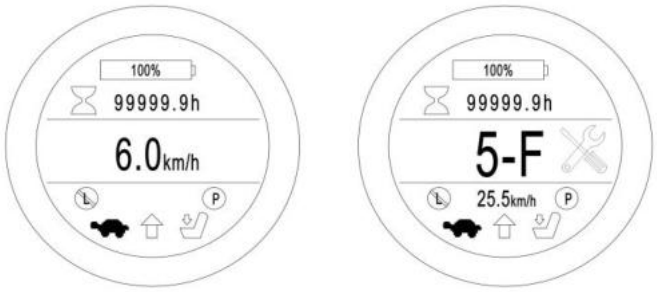

Normal Malfunction

Fig. 13: Battery indicator

The main interface displays as shown in the figure above.

Hour meter
The digital counter after Hourglass Symbol indicates the working hour of the truck.

Battery state of charge
It displays the battery symbol and the current battery level. The charge status of the battery is displayed in ten increments. Displays the battery level as a percentage.

Monkey Wrench Symbol
It displays the current fault code (5-F refers to: HPD failure does not give the interlock to the throttle first, and the fault is reported).

Operating mode and truck speed
The number in the center of the battery indicator indicates the traveling speed (km/h).

Working state

The upper left corner of the battery indicator indicates the state of truck and the its mode.

c. Charging

- Before charging ensure that you are using an appropriate charger for charging the installed battery!
- Before using the charger, please fully understand the instructions of the charger instructions.
- Always follow these instructions!
- The room, where you are charging must be ventilated.
- The exactly charge status can be only checked from the discharge indicator. To control the status, the charging must be interrupted and the truck must be started.

The external charger of lithium-ion battery

Parking the truck at a safe field which is dedicated for charging with a specific power resource.

Lower the forks and remove the load.

Turn off the power, Open the battery cover and let it stay upright, connect the charging connector (18) and power connector (19). Start charging.

Disconnect the charging plug after charging and install the battery cover. After charging, disconnect the connector from the socket and place it in the designated position.

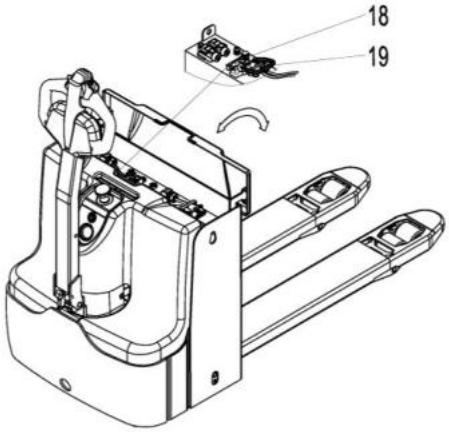

Fig.14: Li-ion battery charging

Charger specification

Manufacturer`s type designation	Battery type	Capacity	Charger specification
PT16L-Li	24 V battery	2VBS-100Ah	24V /40A

d. Description of the lithium-ion battery

The lithium-ion battery is a battery with rechargeable cells, the battery is designed for industrial trucks and can withstand related vibrations during operation. The battery is equipped with special connections for charging and discharging operations. Do not try to install or connected improper connectors to the battery.

The battery is equipped with BMS – battery management system, which performs the control of battery condition and implements related safety protocols to protect the battery and cells from damages caused by operation or environmental conditions. The BMS controls the following safety functions and conditions: voltage, temperature, undervoltage, overvoltage, overtemperature and overcurrent.

Battery temperature range

Temperature range for using the battery is from +5°C to +40°C. Low temperatures reduce the effective battery capacity, high temperatures reduce the battery's life time. The temperature difference between the two sides of the battery shall not exceed 5°C.

Only approved battery chargers must be used to charge the lithium battery.

e. Battery Decals

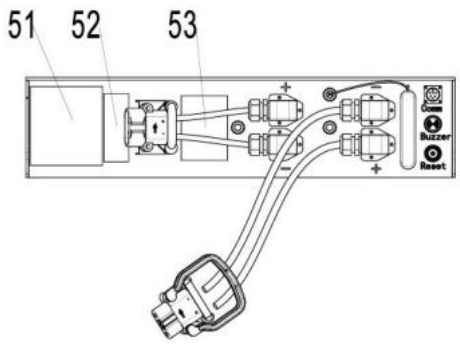

Item	Description
51	Identification plate
52	Bar code and two-dimensional
53	Warning Label

Identification plate and Warning label

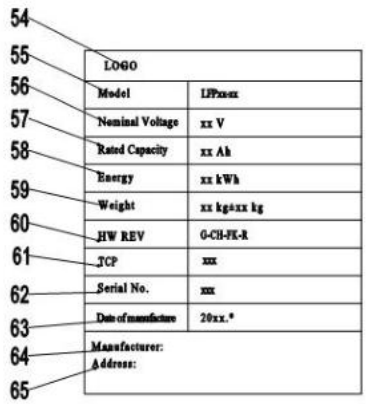

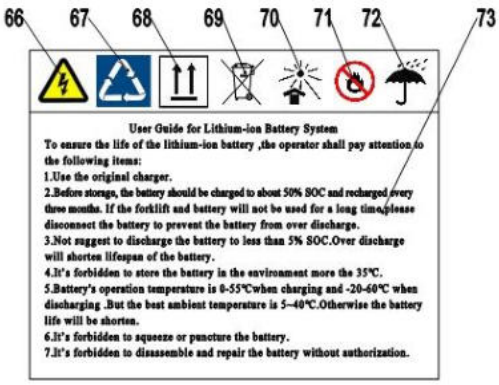

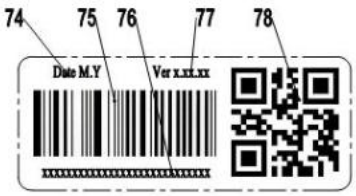

Item	Description	Item	Description
54	Manufacturer logo	67	Rechargeable logo
55	Battery model	68	Vertical upward packing, transportation
56	Nominal voltage of battery	69	No putting into ordinary garbage bins
57	Rated capacity of battery	70	No long-term exposure to sunshine
58	Battery energy of battery	71	Stay away from fire
59	Weight of battery	72	Keep out of the rain
60	Configuration of battery	73	Guide to use
61	Protocol version of battery	74	Production date
62	Production serial No.	75	Battery information bar code
63	Production date	76	Bar code interpretation
64	Name of manufacturer	77	Software version of battery
65	Manufacturer's address	78	Battery information 2D code
66	Electrical hazard marker		

f. Safety Instructions, Warning Indications and other Notes

Safety regulations for handling lithium-ion batteries

Do not try to make any repairs or servicing of lithium batteries

Risk of electric shock and burning

The battery's charging and discharging connectors have open terminals, avoid any body contacts, contamination or direct contacts with objects which can cause short circuit connection of terminals. Use necessary pre-cautions and protective caps to secure the open terminals. The connectors should be maintained in clean and dry conditions.

Use only batteries designed and approved by the manufacturer for the truck.
Do not try to modify or alter the battery.

Any damage or defects to the charger can result in accidents. Use only charger approved by the manufacturer of the truck, which is suitable for used battery

In case charger has any damages or defects, exclude the charger from operation and contact your service provider. Do not modify or try to repair the charger.

mproper use of charger or use of wrong charger can cause damages to a battery or charger. Follow the required charger specifications; If the operation voltage of the charger is out of the applicable voltage range, the charger or battery may be damaged causing serious safety risks. The charger in use must be approved by the battery (truck) manufacturer.

Reversed connection of charging plug is prohibited. Follow the instruction for correct connection.

For disconnection of charging plug use dedicated grip and never pull out the plug by means of cable.

Stop charging immediately if any abnormalities are detected, e.g. severe temperature increase, deformation of battery case, smoke, noise etc.

Intermediate charging

Lithium batteries support so called opportunity charging. The lithium battery, which is not fully discharged can be charged in any time. However, frequent opportunity charging not to the full charging state and stop of charging process before the appearance of corresponding indication of charger may result in dis-balance voltage of cells which increases the battery BMS calculation error. In order to effectively deal with this phenomenon, charge the battery in full allowing the automotive balancing process to be completed at least once a week.

Do not charge a fully charged battery

Note that in order to prevent the battery from continuing restart of charging under fully charged condition causing reduction of battery lifetime, the BMS has a protection function that prohibits recharging of fully charged battery. The charger will not work while battery is fully charged.

Potential hazards

If equipment is used according to its design purpose, following the correct operations procedures, there are no hazards anticipated.

The following hazards can arise in the event of improper use:

- Physical damage to the battery in case a battery falls or is deformed through impacts. Mechanical damages can cause leakages of harmful materials, fire or battery explosion.
- Short circuits may be caused by connecting the two battery terminals, for instance caused by water or intentional/unintentional connections.
- Temperature damages caused by location of batteries in overheated locations or being exposed to impact of fire, open sunlight etc. can cause leakages of harmful materials, fire or battery explosion.

In order to avoid fire, explosion and leakage of harmful materials, a safe place for storing batteries until the service arrives on site must satisfy the following criteria:

- Do not store in places where personnel is located.
- Do not store in places with valuable objects and close to valuable objects.
- A Class D fire extinguisher must be available on demand.
- There should not be any fire or smoke detectors in the storage area in order to ensure that an automatic fire detection system is only activated in the event of actual danger (e.g. naked flames).
- No ventilation intake pipes should be in the facility to exclude spreading of discharged content

within a building.

Examples of where to store a non-functional battery:

- Roofed outdoor position.
- Ventilated container.
- Covered fire resistant box with pressure and smoke discharge option.

Symbols - Safety and Warnings

	Caution! Battery short-circuit is prohibited.
	The battery can be recharged cyclically
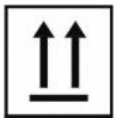	Vertical upward packing, transportation and use
	Used lithium-ion batteries must be treated as hazardous waste. Lithium-ion batteries marked with the recycling symbol and the sign showing a crossed-out waste bin must not be disposed of with ordinary household waste.
	Avoid fire and short circuits causing overheating. Do not ignite or locate batteries close to open flame, heat sources or sparks. Keep lithium-ion batteries away from heat sources.
	Protect the lithium-ion battery from solar radiation or other forms of heat radiation. Do not expose the lithium-ion battery to heat sources.
	Keep out of the rain.

Explosion and fire hazard

Physical damage, thermal effects or incorrect storage in the event of a defect can result in explosions or fire. The battery materials can be flammable.

Particular hazard from combustion products

The lithium batteries may be damaged by a fire. When extinguishing a lithium battery fire, the following information must be taken into consideration.

Contact with combustion products can be hazardous

Fire produces combustion products, which can occur in the form of smoke, through leaking fluids, escaping gases, debris as well decomposition products of certain chemicals. These combustion products are substances that enter the body through the respiratory tract and/or the skin can produce and adverse effects such as choking.

Avoid contact with combustion products.

Use protective equipment.

Special firefighting protective equipment

Use self-contained breathing apparatus.

Wear protective equipment.

Additional firefighting instructions

To prevent secondary fires, the lithium-ion battery must be cooled from the outside. Fluids or solids must never be directed into the lithium battery.

Suitable extinguishing agents

- Carbon dioxide extinguisher (CO2)
- Water (not on mechanically opened or damaged batteries)

Unsuitable extinguishing agents

- Foam
- Grease fire extinguishing agents
- Powder extinguishers
- Metal fire extinguishers (PM 12i extinguishers)
- Metal fire powder PL-9/78 (DIN EN 3SP-44/95)
- Dry sand

Instructions for cooling an overheated, non-physically damaged battery

This type of damage may be caused by a short circuit inside the battery, which may result in leakage of harmful materials, fire or battery explosion.

Material discharge

Battery electrolyte fluid can be hazardous

Electrolyte fluid can be discharged if the battery is physically damaged. Avoid its contact with skin or eyes. If the contact happened:

- Rinse the affected parts with big amount of water and request for medical assistance immediately.
- In case of skin irritation or if any substances are breathed in request the medical assistance immediately.

Precautionary measures for personnel

- Keep personnel away, avoid any contact with smoke or discharged materials.
- Block off the affected area and ensure its reasonable ventilation.
- Wear personal protective equipment. If vapors, dust or aerosols are presented use self-contained breathing apparatus.

Precautionary measures for the environment

Do not allow spilled fluids to enter the water system, drainage system or the underground water.

Cleaning measures

The leaked fluid must be removed professionally following the related protocols.

Battery lifetime and maintenance

The lithium-ion batteries are maintenance-free.

Full discharge can damage the battery

Self-discharge can cause the battery to fully discharged state. Full discharge shortens the service life of the battery and can cause deep discharge and activation of related safety protocols when battery will not be able to be charged anymore.

Before a long period of inactivity, the battery must be charged to at least 70%.
Re-charge the battery at least every 12 weeks.

If the battery is deeply discharged or if the battery temperature is below the permissible level, the battery will not charge. Deep discharged batteries can never be charged. Due to the risk of condensate formation, batteries that have been stored at 0°C or below must only be charged after natural warming up to at least +5°C, forced heating is forbidden.

Storage and safe handling

Storage of batteries

Deep Discharge can damage the battery

If the battery is not used for a long period of time, it can become damaged through discharge.

- Before a long period of inactivity, the battery must be charged to the level of at least 70%.
- Recommended to check and charge, if necessary, the battery every 4 weeks when not in use.
- The storage of fully charged battery reduces its lifetime. Recommended level of charge is in the range of 30% to 70%
- The temperature range for storing the battery is 0°C to 30°C.

Instructions for safe handling

New lithium-ion batteries are transported and stored with a charge status of at least <70 %.

- Do not modify the battery.
- Do not open, damage, drop, penetrate or deform the battery.
- Do not throw the battery into a fire.
- Protect the battery from overheating.
- Protect the battery from direct sun light.

- Follow storage and charging procedures

Failure to comply with these safety instructions can result in fire and explosion or the leakage of harmful materials.

Faults

If any damage is found to the battery or battery charger contact the service provider immediately. Do not open the battery.

Disposal and transport of a lithium-ion battery

Instructions for disposal

Lithium-ion batteries must be disposed of in accordance with the relevant national environmental protection regulations. Batteries must be treated as hazardous waste. Batteries must not be disposed with ordinary waste.

Shipping information

The lithium-ion battery is a hazardous material. The applicable regulations must be fulfilled during transportation.

Shipping functional batteries

Functioning batteries can be shipped in accordance with the related regulations

Shipping faulty batteries

To transport faulty lithium-ion batteries, contact the service provider. Faulty lithium batteries require following of special transporting procedures.

9. REGULAR MAINTENANCE

- Only qualified and trained personnel are allowed to do maintenance on this truck.
- Before maintaining, remove the load from the forks and lower the forks to the lowest position.
- If you need to lift the truck, follow chapter 4b by using designated lashing or jacking equipment. Before working, put safety devices (for instance designated lift jacks, wedges or wooden blocks) under the truck to protect against accidental lowering, movement or slipping.
- Please pay attention by maintain the tiller arm. The gas pressure spring is pre-loaded by compression, carelessness can cause injury.
- Use approved and from your dealer released original spare parts.
- Please consider that oil leakage of hydraulic fluid can cause failures and accidents.
- It is allowed to adjust the pressure valve only from trained service technicians.

If you need to change the wheels, please follow the instructions above. The castors must be round and they should have no abnormal abrasion.
Check the items emphasized maintenance checklist.

a. Maintenance checklist

Table 3: Maintenance checklist

		Interval(Month)			
		1	3	6	12
Hydraulic					
1	Check the hydraulic cylinder(s), piston for damage noise and leakage		●		
2	Check the hydraulic joints and hose for damage and leakage		●		
3	Inspect the hydraulic oil level, refill if necessary		●		
4	Refill the hydraulic oil (12 month or 1500 working hours)				●
5	Check and adjust function of the pressure valve (1600kg /2000kg /2500kg +0/+10% OR 3500lb /4500 lb /5500 lb +0/+10%)				●
Mechanical system					
6	Inspect the forks for deformation and cracks		●		
7	Check the chassis for deformation and cracks		●		
8	Check if all screws are fixed		●		
9	Check the push rods for deformation and damages		●		
10	Check the gearbox for noise and leakage		●		
11	Inspect the wheels for deformation and damages		●		
12	Inspect and lubricate the steering bearing				●
13	Inspect and lubricate the pivot points		●		
14	Lubricate the grease nipples	●			
Electrical system					
15	Inspect the electric wiring for damage		●		
16	Check the electric connections and terminals		●		

17	Test the Emergency switch function		●		
18	Check the electric drive motor for noise and damages		●		
19	Test the display		●		
20	Check, if correct fuses are used		●		
21	Test the warning signal		●		
22	Check the contactor(s)		●		
23	Check the frame leakage (insulation test)		●		
24	Check function and mechanical wear of the accelerator		●		
25	Check the electrical system of the drive motor		●		
Braking system					
26	Check brake performance, if necessary replace the brake disc or adjust the air gap		●		
Battery					
27	Check the battery voltage		●		
28	Clean and grease the terminals and check for corrosion and damage		●		
29	Check the battery housing for damages		●		
30	Check and if necessary refill the battery with distillated water	●			
Charger					
31	Check the main power cable for damages			●	
32	Check the start-up protection during charging			●	
Function					
33	Check the horn function	●			
34	Check the air gap of the electromagnetic brake	●			
35	Test the emergency braking	●			
36	Test the reverse and regenerative braking	●			
37	Test the safety (belly) button function	●			
38	Check the steering function	●			
39	Check the lifting and lowering function	●			
40	Check the tiller arm switch function	●			
General					
41	Check if all decals are legible and complete	●			
42	Inspect the castors, adjust the height or replace these if worn out.		●		
43	Carry out a test run	●			

b. Lubricating points

Lubricate the marked points according to the maintenance checklist. The required grease specification is: DIN 51825, standard grease.

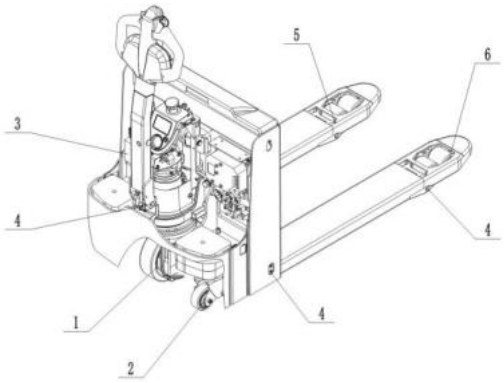

Fig. 15: Lubricating points

1. Steering castor bearing
2. Support castor bearing
3. Pump
4. Axle
5. Joint
6. Load roller bearing

c. Check and refill hydraulic oil

The required hydraulic fluid- type is

- H-LP 46, DIN 51524
- Viscosity is 41.4 - 47
- Depending on the type the amount is 0,7L

Waste material like oil, used batteries or other must be probably disposed and recycled according to the national regulations and if necessary brought to a recycling company.
If necessary add oil at the filling point.

d. Checking electrical fuses

Remove the main cover. The fuses are located according to fig. 16.

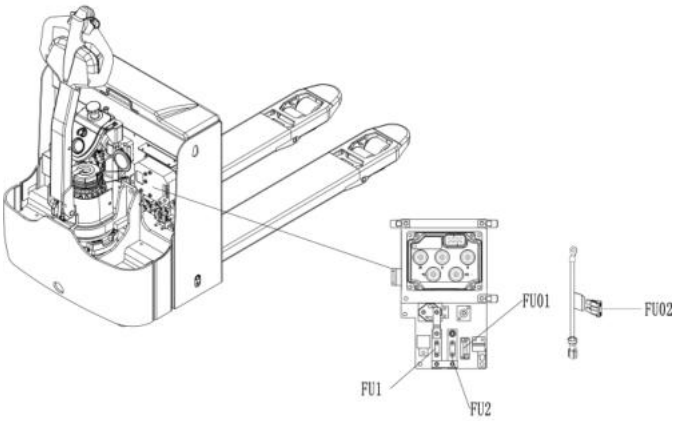

Fig. 16: Location fuses（PT16L-Li）

Table 4: Size fuses（PT16L-Li）

	Rate
FU1	150 A
FU2	80 A
FU01	10A
FU02	10A

10. TROUBLE SHOOTING

- If the truck has malfunctions follow the instructions, mentioned under chapter 6.

Table 6: Trouble shooting

TROUBLE	CAUSE	REPAIR
Load can’t be lifted	Load weight too high	Lift only the max. capacity, mentioned on the ID-plate
	Battery discharged	Charge the battery
	Lifting fuse faulty	Check and eventually replace the lifting fuse
	Hydraulic oil level too low	Check and eventually refill hydraulic oil
	Oil leakage	Repair the hoses and/or the sealing of the cylinder
Oil leakage from air breathing	Excessive quantity of oil.	Reduce oil quantity.
Truck not starts operating	Battery is charging	Charge the battery completely and then remove the main power plug form the electrical socket.
	Battery not connected	Connect the battery correctly
	Fuse faulty	Check and eventually replace fuses
	Low battery	Charge the battery
	Combined emergency switch is activated	De-activate the combined emergency switch by insert and pull the knob.
	Tiller in the operating zone	Move the tiller firstly to the braking zone.

If the truck has malfunctions and can’t be operated out of the working zone, jack the truck up and go with a load handler under the truck and safe the truck securely. Then move truck out of the aisle.

11. WIRING/ CIRCUIT DIAGRAM

a. Electrical circuit diagram

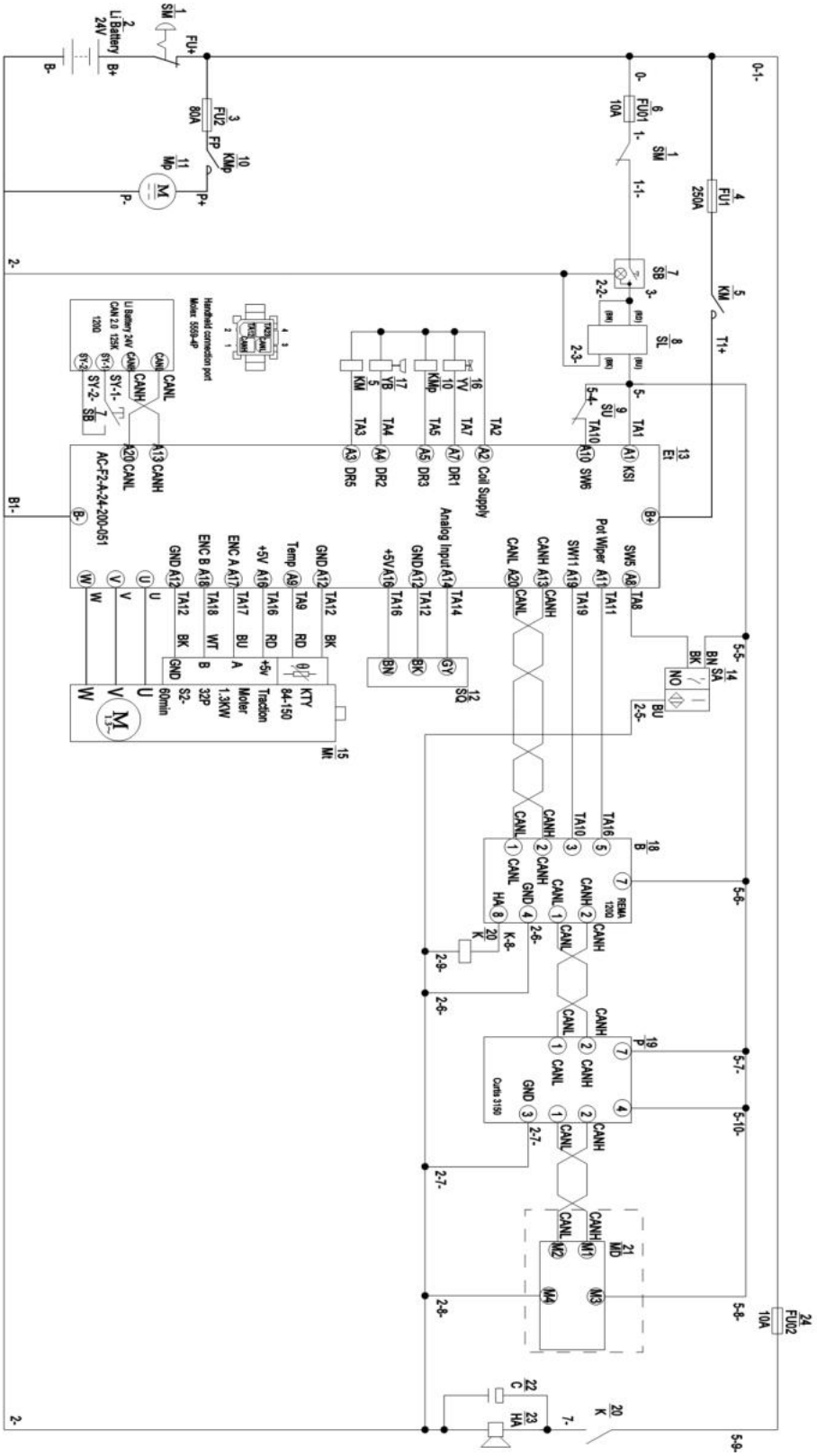

Fig. 17: Electrical diagram (PT16L-Li)(F2A)

Table 7: Description of electrical diagram

Code	Item	Code	Item
GB	Battery	K	Relay
SM	Emergency button	SA	Proximity switch
Et	Controller	P	Indicator
KMt	Main contactor	B	Tiller
FU01	Fuse 150A	C	Capacitor
FU02	Fuse 80A	HA	Horn
FU1	Fuse 10A	SU	Micro switch
SY	Key switch	YV	Electromagnetic valve
KMp	Lifting contactor	Mt	Traction motor
Es	Steering Controller	YB	Electromagnetic brake
Mp	Pump motor	VD	Diode
MD	Remote modules	SQ	Deceleration potentiometer

b. Electrical circuit diagram

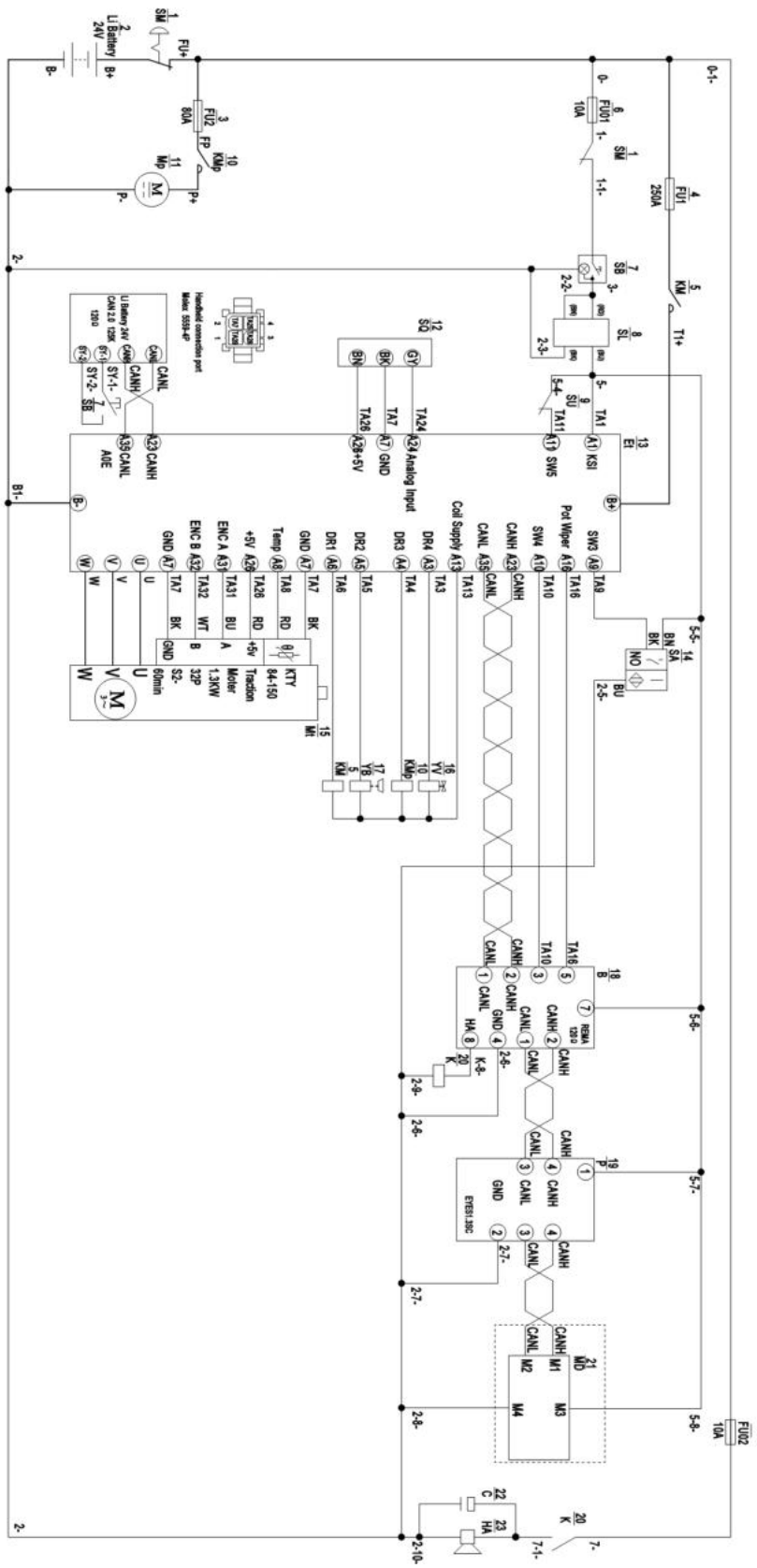

Fig. 18: Electrical diagram (PT16L-Li)(A0E)

Table 8: Description of electrical diagram

Code	Item	Code	Item
GB	Battery	K	Relay
SM	Emergency button	SA	Proximity switch
Et	Controller	P	Indicator
KMt	Main contactor	B	Tiller
FU01	Fuse 150A	C	Capacitor
FU02	Fuse 80A	HA	Horn
FU1	Fuse 10A	SU	Micro switch
SY	Key switch	YV	Electromagnetic valve
KMp	Lifting contactor	Mt	Traction motor
Es	Steering Controller	YB	Electromagnetic brake
Mp	Pump motor	VD	Diode
MD	Remote modules	SQ	Deceleration potentiometer

c. Hydraulic circuit

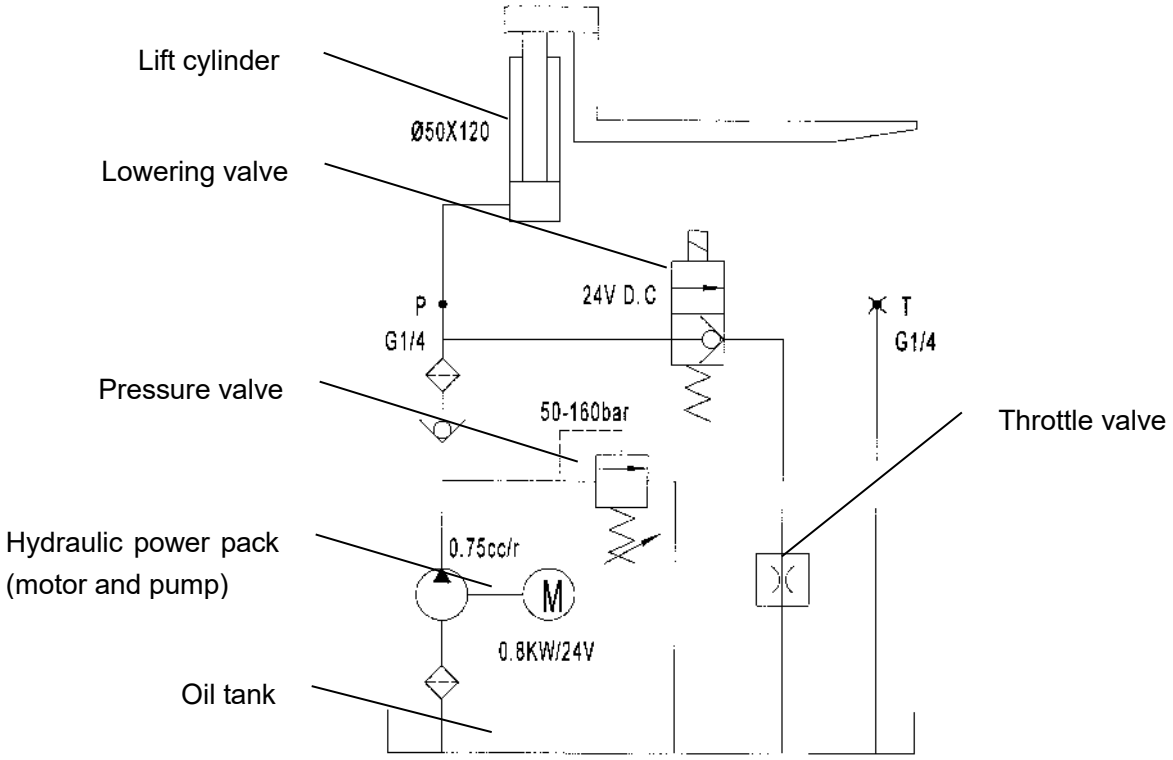

Fig. 19: PT16L-Li Hydraulic circuit

12. SPECIALIZED STIPULATIONS FOR THE US-AMERICAN MARKET

The content in this chapter is specialized for the US-American market.

a. Foreword/ Compliance

Operating this truck requires knowledge which can be acquired from this instruction handbook. This handbook must be kept available throughout the entire period of use of the industrial truck.

IT IS LAW; YOU MUST BE TRAINED AND CERTIFIED TO OPERATE THIS TRUCK! READ AND OBEY ALL WARNINGS AND INSTRUCTIONS IN THIS MANUAL AND ON THE TRUCK!

Only properly trained operators are allowed to operate a powered industrial truck. Your employer must train you and certify, that you are qualified to operate this truck (required by OSHA § 1910.178). The training must satisfy OSHA requirements and as minimum the topics mentioned in this handbook. Depending on the context in this operating manual, the user can refer to several people, including the owner of the truck, anyone who leases or borrows this truck, and the operator as defined in ASME B56.1. Please pay attention to the section in ASME B56.1 concerning the operator. In this standard, it is defined that the safe operation is the responsibility of the operator (ASME B56.1-2003, Part II, section 5.1.1). You and others can be seriously injured or even killed if you don't use this truck correctly. Before operating your truck, inspect your truck and ensure that it is in correct working order. This truck was designed and built to current industry and government standards. For more information see following:

- ASME B56.1 (American Society of Mechanical Engineers)
- OSHA §1910.178 (Occupational Safety and Health Act)
- UL 583 (Underwriters Laboratory)
- ANSI Z535.4 (American National Standards Institute)

⚠ DANGER This sign indicates hazard situations, if not avoided, will result in serious injury or death. The instructions or precautions to this message must be observed to avoid the potential risk of injury or death.

⚠WARNING If not followed, warning indicates hazard situations which may lead to moderate injury. The instructions or precautions to this message must be observed to avoid the potential risk of injury or death.

⚠ CAUTION If not followed, caution indicated situations which may lead to minor injury. Instructions or precautions must be observed to avoid minor injury.

b. Description warning labels (only US-market)

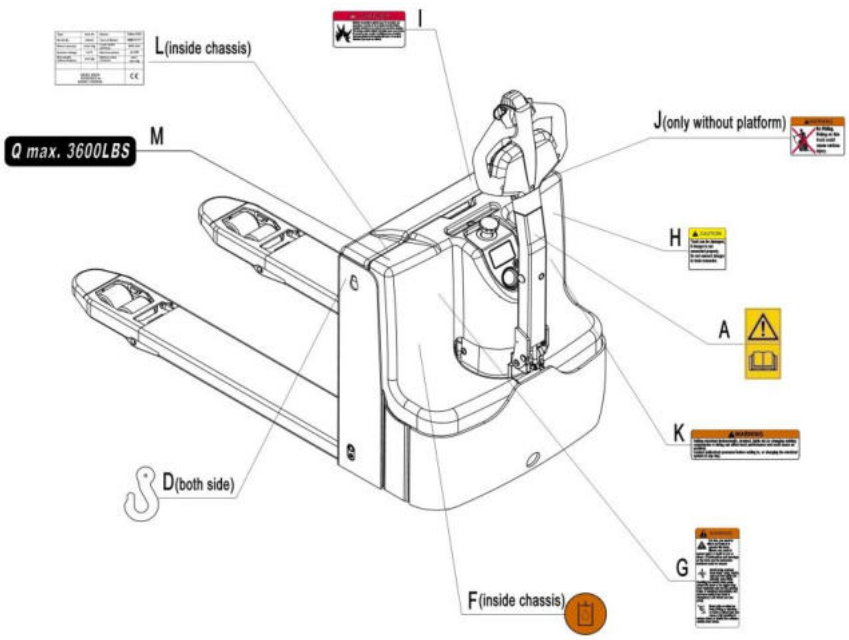

Fig. 20: Warning labels and safety devices PT 16L-Li (only USA)

A	Sticker to read and follow this instruction	I	Sign danger battery
D	Hook mark	J	Sign danger not riding
F	Sign oil filling point	K	Identification plate (ID-plate)
G	Sign warning stay clear stop truck	L	Name plate
H	Sign caution charge	M	Capacity sticker

The truck is equipped with an emergency button (7) which stops all lifting-, lowering-, driving- functions and engages the failsafe electromagnetic brake when it is pushed. The function is described in chapter 2c. Follow the instructions given on the decals. Replace the decals if they are damaged or miss

Sign read and follow this instruction (A)

Sign oil filling point (F)

Sign warning stay clear stop truck (G)

Sign Caution charger(H)

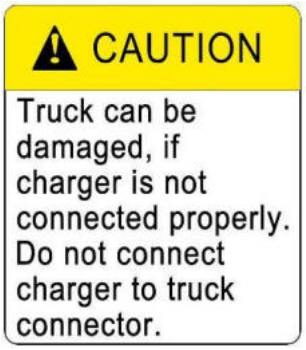

Sign danger battery (I)

Sign danger not riding (J)
(only if not equipped with a foldable platform)

Sign warning electrical devices (K)

c. Technical data for US market

Drawing see page 5

Table 11: Main technical data for standard version(US market)

Type sheet for industrial truck acc. to VDI 2198				2024.05.15	
Distinguishing mark	1.2	Manufacturer`s type designation		PT35L-Li	
	1.3	Drive		Battery	
	1.4	Operator type		Pedestrian	
	1.5	Load Capacity / rated load	Q(lbs)	3600	
	1.6	Load centre distance	c(in)	24	
	1.8	Load distance ,centre of drive axle to fork	x(in)	38	
	1.9	Wheelbase	y(in)	49.5	
Weight	2.1	Service weight	lbs	787	
	2.2	Axle loading, laden front/rear	lbs	2185/2130	
	2.3	Axle loading, unladen front/rear	lbs	650/137	
Tyres, chassis	3.1	Tires		PU	
	3.2	Tire size,front	∅ x w (in)	∅9.1×2.8	
	3.3	Tire size,rear	∅ x w (in)	∅3.3×3.3/∅3.2×4.3[1)]	
	3.4	Additional wheels(dimensions)	∅ x w (in)	∅3.9×1.6	
	3.5	Wheels,number front/rear(x=driven wheels)		1×+2/4	
	3.6	Tread, front	b_{10} (in)	20	
	3.7	Tread, rear	b_{11} (in	14.4	20.2
Dimensions	4.4	Lift	h_3 (in)	4.7	
	4.9	Height of tiller in drive position min./ max.	h_{14} (in)	30.1/49.2	
	4.15	Height, lowered	h_{13} (in)	3.4/3.3[2)]	
	4.19	Overall length	l_1 (in)	62.6	
	4.20	Length to face of forks	l_2 (in)	17.3	
	4.21	Overall width	b_1 (in)	28.7	
	4.22	Fork dimensions	s/e/l	60/173/1150	
	4.25	Distance between fork- arms	b_5 (in)	21.3	27
	4.32	Ground clearance, centre of wheelbase	m_2 (in)	1.0/1.1[3)]	
	4.34	Aisle width for pallets800X1200 lengthways (200mm safe distance)	Ast(in)	82.1	
	4.35	Turning radius	Wa (in)	55.9	
Performance data	5.1	Travel speed, laden/ unladen	Mph	3.5/3.7	
	5.2	Lift speed, laden/ unladen	fpm	0.082/0.115	
	5.3	Lowering speed, laden/ unladen	fpm	0.115/0.098	
	5.8	Max. gradeability, laden/ unladen	%	8/15	
	5.10	Service brake		Electromagnetic	
Electric- engine	6.1	Drive motor rating S2 60min	HP	1.8	
	6.2	Lift motor rating at S3 10%	HP	1.1	
	6.3	Battery acc. to DIN 43531/ 35/ 36 A, B, C, no		NO	
	6.4	Battery voltage, nominal capacity K5	V/Ah	24/100	
	6.5	Battery weight	lbs	65±1.1	
	6.6	Energy consumption acc. to VDI cycle	kWh/h	0.147	

Addition data	8.1	Type of drive control		AC -Speed Control
	8.4	Sound level at driver`s ear acc. to EN 12053	dB(A)	<70

Notes:1)when h_{13} is 3.3in,select this single wheel;

2)with ø3.2x4.3 single wheel;

3)When h_{13} is 3.3in, m_2 is 1.1in.

13. DECLARATION OF CONFORMITY(valid, if sold within the EU)

[GB] Original CE Declaration of conformity

The signatory hereby declares that the specified machine conforms to the EC Directive 2006/42/EC (Machine Directive), and 2014/30/EU (Electro-Magnetic Compatibility, EMC) including their amendments as translated into national legislation of the member countries. The signatory is individually authorized to compile the technical documents and declares that the following standards, including the normative procedures contained therein, have been applied:

[D] Original EG- Konformitätserklärung

Der Unterzeichner erklärt hiermit, dass die angegebene Maschine den EG-Richtlinien 2006/42/EG (Maschinenrichtlinie) und 2014/30/EU (Elektromagnetische Verträglichkeit, EMV) einschließlich ihrer Änderungen in der Umsetzung in die nationale Gesetzgebung der Mitgliedsländer entspricht. Der Unterzeichner ist zur Zusammenstellung der technischen Unterlagen einzeln befugt und erklärt, dass folgende Normen, einschließlich der darin enthaltenen normativen Verfahren, angewendet wurden:

[E] Original DECLARACIóN DE CONFORMIDAD CE

El signatario declara por la presente que la máquina especificada cumple con la Directiva CE 2006/42/EC (Directiva de Máquinas) y 2014/30/EU (Compatibilidad Electromagnética, EMC) incluidas sus enmiendas traducidas a la legislación nacional de los países miembros. El firmante está autorizado individualmente para compilar los documentos técnicos y declara que se han aplicado los siguientes estándares, incluidos los procedimientos normativos contenidos en ellos:

[F] Originale DECLARATION DE CONFORMITE CE

Le signataire déclare par la présente que la machine spécifiée est conforme à la directive CE 2006/42/CE (directive machine) et 2014/30/UE (compatibilité électromagnétique, CEM), y compris leurs modifications telles que traduites dans la législation nationale des pays membres. Le signataire est individuellement autorisé à compiler les documents techniques et déclare que les normes suivantes, y compris les procédures normatives qu'elles contiennent, ont été appliquées:

[NL] Origineel EG-CONFORMITEITSVERKLARING

De ondertekenaar verklaart hierbij dat de gespecificeerde machine voldoet aan de EG-richtlijnen 2006/42/EG (machinerichtlijn) en 2014/30/EU (elektromagnetische compatibiliteit, EMC) inclusief hun amendementen zoals vertaald in de nationale wetgeving van de aangesloten landen. De ondertekenaar is individueel gemachtigd om de technische documenten samen te stellen en verklaart dat de volgende normen, inclusief de normatieve procedures die daarin zijn opgenomen, zijn toegepast:

[P] Original DECLARAÇÃO DE CONFORMIDADE CE

O signatário declara que a máquina especificada está em conformidade com a Diretiva EC 2006/42/EC (Diretiva de Máquinas) e 2014/30/EU (Compatibilidade Eletromagnética, EMC), incluindo suas emendas traduzidas para a legislação nacional dos países membros. O signatário está individualmente autorizado a compilar os documentos técnicos e declara que as seguintes normas, incluindo os procedimentos normativos neles contidos, foram aplicadas:

[I] Originale DICHIARAZIONE DI CONFORMITÀ CE

Il firmatario dichiara che la macchina specificata è conforme alla Direttiva CE 2006/42/CE (Direttiva macchine) e 2014/30/UE (Compatibilità elettromagnetica, EMC) compresi i relativi emendamenti tradotti nella legislazione nazionale dei paesi membri. Il firmatario è autorizzato individualmente alla compilazione dei documenti tecnici e dichiara che sono state applicate le seguenti norme, comprese le procedure normative ivi contenute:

[BG] Оригинален ЕВРОПЕЙСКА ОБЩНОСТ - ДЕКЛАРАЦИЯ ЗА СЪОТВЕТСТВИЕ

С настоящото подписалото лице декларира, че посочената машина отговаря на Директива на ЕО 2006/42/ЕС (Директива за машини) и 2014/30/EU (Електромагнитна съвместимост, ЕМС), включително техните изменения, преведени в националното законодателство на страните-членки. Подписалото лице е лично упълномощено да съставя техническите документи и декларира, че са приложени следните стандарти, включително съдържащите се в тях нормативни процедури:

[CZ] Originál EG - PROHLÁŠENÍ OSHODĚ

Signatář tímto prohlašuje, že uvedený stroj je ve shodě se směrnicí ES 2006/42/ES (Směrnice o strojích) a 2014/30/EU (Elektromagnetická kompatibilita, EMC) včetně jejich změn ve znění přeložené do národní legislativy členských zemí. Podepisující osoba je samostatně oprávněna sestavit technické dokumenty a prohlašuje, že byly použity následující normy, včetně normativních postupů v nich obsažených:

[DK] Original EF-OVERENSSTEMMELSESERKLÆRING

Underskriveren erklærer hermed, at den specificerede maskine er i overensstemmelse med EF-direktivet 2006/42/EC (maskindirektivet) og 2014/30/EU (elektro-magnetisk kompatibilitet, EMC) inklusive deres ændringer som oversat til national lovgivning i medlemslandene. Underskriveren er individuelt bemyndiget til at udarbejde de tekniske dokumenter og erklærer, at følgende standarder, inklusive de normative procedurer indeholdt deri, er blevet anvendt:

[EST] Originaal EL vastavusavaldus

Allakirjutanu kinnitab käesolevaga, et nimetatud masin vastab EÜ direktiivile 2006/42/EÜ (masinadirektiiv) ja 2014/30/EL (elektromagnetiline ühilduvus, EMC), sealhulgas nende muudatustele, nagu on tõlgitud liikmesriikide siseriiklikesse õigusaktidesse. Allakirjutanul on individuaalselt õigus koostada tehnilisi dokumente ja ta kinnitab, et on kohaldatud järgmisi standardeid, sealhulgas neis sisalduvaid normatiivprotseduure:

[FIN] Alkuperäinen EU-YHDENMUKAISUUSSELOSTUS

Allekirjoittaja vakuuttaa täten, että määritetty kone on EY-direktiivin 2006/42/EY (konedirektiivi) ja 2014/30/EU (sähkömagneettinen yhteensopivuus, EMC) mukainen, mukaan lukien niiden muutokset, sellaisina kuin ne on käännetty jäsenmaiden kansalliseen lainsäädäntöön. Allekirjoittaja on henkilökohtaisesti valtuutettu kokoamaan tekniset asiakirjat ja vakuuttaa, että seuraavia standardeja, mukaan lukien niihin sisältyvät normatiiviset menettelyt, on sovellettu:

[GR] Πρωτότυπο ΔΗΛΩΣΗΣΥΜΜΟΡΦΩΣΗΣΕΟΚ

Ο υπογράφοντος δηλώνει με το παρόν ότι το συγκεκριμένο μηχάνημα συμμορφώνεται με την Οδηγία 2006/42/ΕΚ (Οδηγία Μηχανών) και 2014/30/ΕΕ (Ηλεκτρομαγνητική Συμβατότητα, ΕΜΣ) συμπεριλαμβανομένων των τροποποιήσεών τους όπως έχουν μεταφραστεί στην εθνική νομοθεσία των χωρών μελών. Ο υπογράφοντος είναι ατομικά εξουσιοδοτημένος να συντάξει τα τεχνικά έγγραφα και δηλώνει ότι έχουν εφαρμοστεί τα ακόλουθα πρότυπα, συμπεριλαμβανομένων των κανονιστικών διαδικασιών που περιέχονται σε αυτά:

[H] Eredeti EU KONFORMITÁSI NYILATKOZAT

Az aláíró ezennel kijelenti, hogy a megadott gép megfelel a 2006/42/EC (gépirányelv) és a 2014/30/EU (elektromágneses összeférhetőség, EMC) irányelveknek, beleértve azok módosításait a tagországok nemzeti jogszabályaiba lefordítva. Az aláíró egyénileg jogosult a műszaki dokumentumok összeállítására, és kijelenti, hogy a következő szabványokat, beleértve az abban foglalt normatív eljárásokat, alkalmazták:

[LT] Originalus ES atitikimo deklaracija

Pasirašęs asmuo pareiškia, kad nurodyta mašina atitinka EB direktyvą 2006/42/EB (mašinų direktyvą) ir 2014/30/ES (elektromagnetinį suderinamumą, EMC), įskaitant jų pakeitimus, išverstus į šalių narių nacionalinius teisės aktus. Pasirašęs asmuo yra individualiai įgaliotas rengti techninius dokumentus ir pareiškia, kad buvo taikomi šie standartai, įskaitant juose nurodytas normines procedūras:

[LV] Oriģināls ES atbilstības deklarācija

Parakstītājs ar šo apliecina, ka norādītā iekārta atbilst EK Direktīvai 2006/42/EK (Mašīnu direktīva) un 2014/30/ES (Elektromagnētiskā saderība, EMC), ieskaitot to grozījumus, kas ir tulkoti dalībvalstu nacionālajos tiesību aktos. Parakstītājs ir individuāli pilnvarots sastādīt tehniskos dokumentus un apliecina, ka ir piemēroti šādi standarti, tostarp tajos ietvertās normatīvās procedūras:

[N] Opprinnelig EU-KONFORMITETSERKLÆRING

Underskriveren erklærer herved at den spesifiserte maskinen er i samsvar med EC-direktivet 2006/42/EC (maskindirektivet), og 2014/30/EU (elektromagnetisk kompatibilitet, EMC) inkludert deres endringer som oversatt til nasjonal lovgivning i medlemslandene. Underskriveren er individuelt autorisert til å sammenstille de tekniske dokumentene og erklærer at følgende standarder, inkludert de normative prosedyrene som finnes deri, er brukt:

[PL] Oryginalny DEKLARACJA ZGODNOŚCI WE

Sygnatariusz niniejszym oświadcza, że określona maszyna jest zgodna z dyrektywą WE 2006/42/WE (dyrektywa maszynowa) i 2014/30/UE (kompatybilność elektromagnetyczna, EMC) wraz z ich poprawkami w tłumaczeniu na ustawodawstwo krajowe krajów członkowskich. Sygnatariusz jest indywidualnie upoważniony do sporządzania dokumentacji technicznej i oświadcza, że zastosowano następujące normy, w tym zawarte w nich procedury normatywne:

[RO] Original DECLARAŢIE DE CONFORMITATE CE

Semnatarul declară prin prezenta că mașina specificată este conformă cu Directiva CE 2006/42/CE (Directiva Mașini) și 2014/30/UE (Compatibilitate electro-magnetică, EMC), inclusiv amendamentele acestora, astfel cum au fost traduse în legislația națională a țărilor membre. Semnatarul este autorizat individual să întocmească documentele tehnice și declară că au fost aplicate următoarele standarde, inclusiv procedurile normative cuprinse în acestea:

[RUS] Оригинал Декларация соответствия стандартам ЕС

Настоящим подписывающая сторона заявляет, что указанная машина соответствует Директиве ЕС 2006/42/ЕС (Директива по машинам) и 2014/30/ЕС (Электромагнитная совместимость, ЭМС), включая их поправки, переведенные в национальное законодательство стран-членов. Подписавшаяся сторона имеет индивидуальное право на составление технических документов и заявляет, что были применены следующие стандарты, включая содержащиеся в них нормативные процедуры:

[S] Original EG-KONFORMITETSFÖRKLARING

Undertecknaren intygar härmed att den specificerade maskinen överensstämmer med EG-direktivet 2006/42/EC (maskindirektivet) och 2014/30/EU (elektromagnetisk kompatibilitet, EMC) inklusive deras tillägg som översatts till nationell lagstiftning i medlemsländerna. Undertecknaren är individuellt behörig att sammanställa de tekniska dokumenten och förklarar att följande standarder, inklusive de normativa procedurerna som finns däri, har tillämpats:

[SK] Originál vyhlásenie o zhode

Signatár týmto vyhlasuje, že špecifikovaný stroj je v súlade so Smernicou ES 2006/42/EC (Smernica o strojoch) a 2014/30/EU (Elektromagnetická kompatibilita, EMC) vrátane ich dodatkov preložených do národnej legislatívy členských krajín. Signatár je individuálne oprávnený zostavovať technické dokumenty a vyhlasuje, že boli aplikované nasledujúce normy vrátane normatívnych postupov v nich obsiahnutých:

[SLO] Original EU IZJAVA O SKLADNOSTI

Podpisnik s tem izjavlja, da je navedeni stroj v skladu z Direktivo ES 2006/42/ES (Direktiva o strojih) in 2014/30/EU (Electro-Magnetic Compatibility, EMC), vključno z njunimi spremembami, kot so prevedene v nacionalno zakonodajo držav članic. Podpisnik je posamično pooblaščen za sestavo tehnične dokumentacije in izjavlja, da so bili uporabljeni naslednji standardi, vključno z normativnimi postopki, ki jih vsebuje:

[TR] Orijinal AB Uygunluk Açıklaması

İmza sahibi, belirtilen makinenin AB Direktifi 2006/42/EC (Makine Direktifi) ve 2014/30/EU (Elektro-Manyetik Uyumluluk, EMC) ve bunların üye ülkelerin ulusal mevzuatına tercüme edilen değişiklikleri ile uyumlu olduğunu beyan eder. İmza sahibi, teknik belgeleri derlemeye bireysel olarak yetkilidir ve burada yer alan normatif prosedürler dahil olmak üzere aşağıdaki standartların uygulandığını beyan eder:

<the applied standards have to be shown here>

(1) Type: **XX XX– Self-propelled industrial truck**

(2) Serial No: **XXXXXXXX**

(3) Year of constr.: **YYYY**

(4) Manufacturer: Noblelift Intelligent Equipment Co., Ltd.
528 Changzhou Road, Taihu Sub-district, Changxing, 313100, PR China

(5) Responsible for compiling the technical documentation: <Company name>,
<Company Address>

(6) Date: <Place>, **YYYY.MM.DD**

(7) Authorized signatory: <Position> **Mr. Sample**

If you can read this text, your declaration is not complete. In this case ask for a copy.

(1) Type/ Typ/ Tipo/ Modello/ Tyyppi/ Tipo / ΤΥΠΟΣ/ Típus/ Tip/ Тип/ Tips/ Tipas/ Tüüp:
(2) Serial No./ Serien-Nr./ N°. de série/ Serienummer/ Nº de serie/ Numero di serie/ Serienr./ Sarjanro/ αυξάνωναριθμός/ Seriové číslo/ Szériaszám/ Nr.Seryjny/ Serijska številka/ Výrobné číslo/ Серийныйномер/ Seri No./ Seerianr./ Sērijas Nr./ Serijos numeris:
(3) Year of constr./ Baujahr/ Année de constr./ Bouwjaar/ Año de constr./ Anno di costruzione/ Produktionsår/ Byggeår/ Tillverkningsår/ Valmistusvuosi / Ano de fabrico / έτοςκατασκευής/ Rokvýroby/ Gyártásév/ Rokprodukcji / Letnik / Годизготовления / Üretimyılı / Väljalaskeaasta / Izgatavošanas gads / Gamybosmetai
(4) Manufacturer/ Hersteller/ Fabricante/ Fabricant/ Fabrikant/ Fabricante/ Produttore/ производител/ Výrobce/ Fabrikant/ Tootja/ Valmistaja/ Κατασκευαστής/ Gyártó/ Gamintojas/ Ražotājs/ Produsent/ Producent/ Producător/ Производитель/ Tillverkare/ Výrobca/ Proizvajalec/ Üretici firma
(5) Responsible for compiling the technical documentiton/ Verantwortlich für die Zusammenstellung der technischen Dokumentation/ Responsable de compilar la documentación técnica/ Responsable de la compilation de la documentation technique/ Verantwoordelijk voor het samenstellen van de technische documentatie/ Responsável pela compilação da documentação técnica/ Responsabile della compilazione della documentazione tecnica/ Отговаря за съставянето на техническата документация/ Zodpovídá za sestavení technické dokumentace/ Ansvarlig for udarbejdelse af den tekniske documentation/ Vastutab tehnilise dokumentatsiooni koostamise eest/ Vastaa teknisen dokumentaation laatimisesta/ Υπεύθυνος για τη σύνταξη της τεχνικής τεκμηρίωσης/ Felelős a műszaki dokumentáció összeállításáért/ Atsakingas už techninės dokumentacijos sudarymą/ Atbildīgs par tehniskās dokumentācijas sastādīšanu/ Ansvarlig for sammenstilling av teknisk dokumentasjon/ Odpowiedzialny za kompletowanie dokumentacji technicznej/ Responsabil cu intocmirea documentatiei tehnice/ Ответственный за составление технической документации/ Ansvarig för att sammanställa den tekniska dokumentationen/ Zodpovedá za zostavenie technickej dokumentácie/ Odgovoren za pripravo tehnične dokumentacije/ Teknik dokümantasyonun derlenmesinden sorumlu
(6) Date/ Datum/ Data/ Fecha/ datum/ Dato/ päiväys/ Kuupäev/ Datums/дата/ Dátum/ dátum/ tarih/ ημερομηνία
(7) Authorised signatory/ ImAuftrag/ pour ordre/ Incaricato/ Por orden de/ por procuração/ op last van/ påvegneaf/ påuppdrag/ Etteroppdrag/ psta./ Ülesandel / pavedus / v.i. / Попоручению / megbízásából /длъжностнолице / z pověření / z poverenia / po nalogu / napolecenie / din sarcina / adına / θαη' ελληνή