Print Number：　　Print Date：

NOBLELIFT

Scan QR Code for More

Electric Pallet Truck PT20L

PARTS MANUAL

504746010101

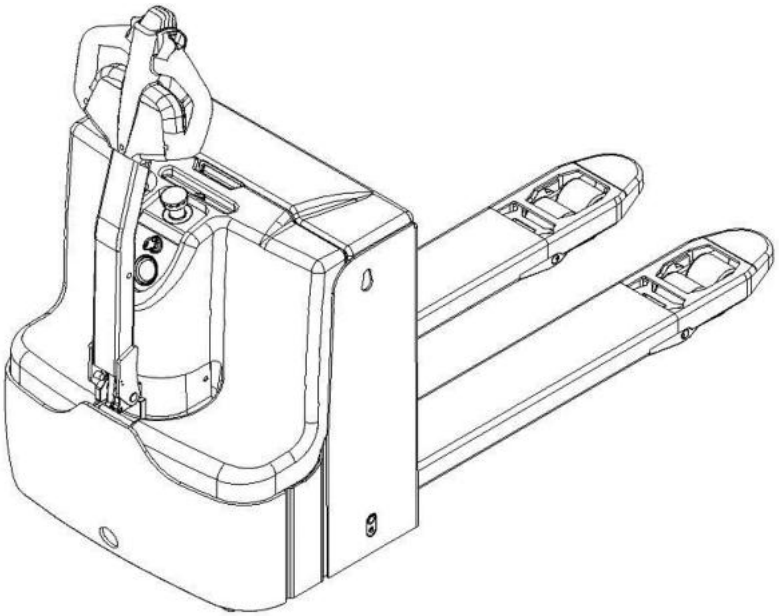

Version：V02

Truck Identification Number From：

Parts Manual

PT20L-PM02EN

Please order spare parts from authorized dealers of Noblelift Intelligent Equipment Co., LTD.

In order to avoid wrong delivery, all the orders for spare parts should specify the following items:

- Truck model, identification number and manufacture year.
- Orders for spare parts of mast, hydraulic transmission unit, steering axle, motor, etc. shall indicate the manufacture number of these parts.
- Codes for Noblelift spare parts are shown in the table of parts manual. Please also pay attention to the description of supply status, order quantity, etc. (check the number listed in "Mark" column of the parts manual).

"Mark" Column:

The unmarked indicates the parts are in short supply cycle.

Number 1: supply as package. Indicating these that parts are small parts and seal parts, which are supplied in package unit and in short supply cycle.

Number 2: supply with constraints. Indicating that these spare parts are not in stock and will be prepared for production after receiving the order from customers, which are in long supply cycle.

Number 3: phasing-out supply. Indicating that these parts will be replaced by new parts due to technical improvements and the current stock will not be available when these parts run out. Please check the description of technical improvements notice.

Number 4: supply as assembly. Indicating that these parts are assembly parts defined by manufacture process, which cannot be supplied as a single part.

Number 5: check other tables.

This parts manual is the property of Noblelift and can be shared under the confidential agreement only, Noblelift has the right to claim for compensation of any unauthorized use. Copy without permission is not allowed. Figures in the manual are not limited by the original design. Noblelift Intelligent Equipment Co., LTD reserves the right to improve the products for continuous technology progress.

Table of Contents

Chapter 1: Drive System....4
01 Drive Unit (504446013501)....4
02 Drive Assembly 1.3kW (534746013502)....6
Chapter 2: Hydraulic System....8
01 Hydraulic System (504446024001)....8
02 Hydraulic Power Unit (504446024002)....10
Chapter 3: Truck Frame....12
01 Truck Body (504446021501)....12
02 Chassis (504746038501)....14
02 Chassis (504746038501) Continuation1....16
02 Chassis (504746038501) Continuation2....18
03 Chassis (Sideways Exchange)(504746038502)....20
03 Chassis (Sideways Exchange) (504746038502) Continuation1....22
03 Chassis (Sideways Exchange) (504746038502) Continuation2....24
Chapter 4: Steering System, Braking System, Wheels....26
01 Tiller (504446011001)....32
02 Tiller (535946011002)....34
03 Load Wheel (Tandem) (505646017001)....36
04 Load Wheel (Single) (505646017002)....38
05 Caster (504446016501)....40
Chapter 5: Electrical Parts....42
01 Display Assembly (504746010001)....42
02 Wire Harness (504746033001)....44
03 Controller (504746033002)....46
04 Charger (504746036501)....48
04 Charger (504746036501) Continuation 1....50
05 Battery (504746037001)....52
Chapter 6: Special Parts....54
01 Load Backrest (505646040501)....54
Chapter 7: Others....56
01 Labels and Decals (EU) (504746047001)....56
02 Labels and Decals (US) (504746047002)....58
Appendix....60
01 Electrical Circuit Diagram (504446045501)....60
02 Hydraulic Circuit Diagram (504446045501)....61
03 Consumable Parts List....62

Chapter 1: Drive System

01 Drive Unit (504446013501)

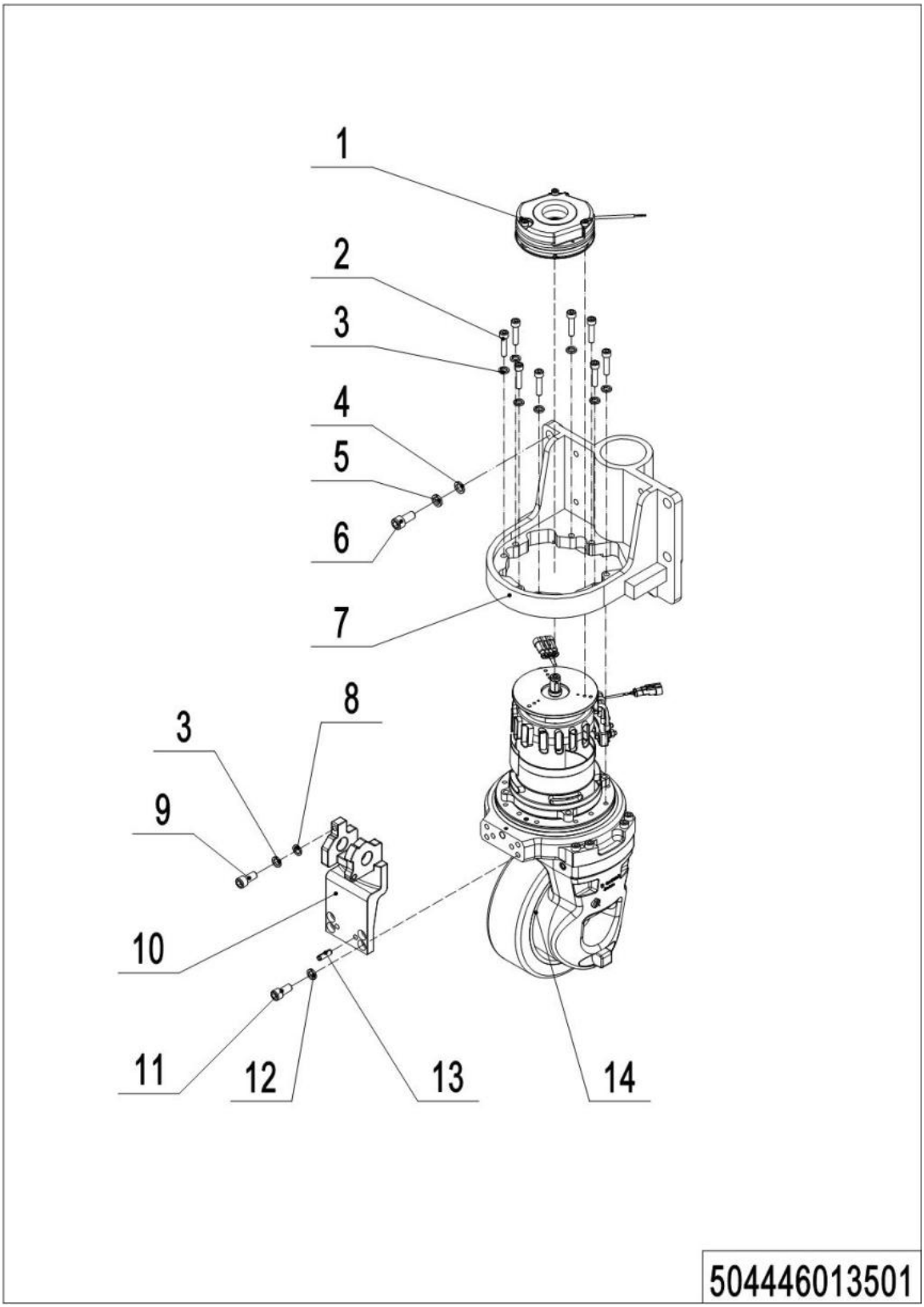

1= Supply as package. 2= Supply with constraints. 3= Phasing-out supply. 4= Supply as assembly. 5= Check other tables.

01 Drive Unit (504446013501)

No.	Item Code	Mark	Item Description	Qty.	Substitute	Note
1	940700100001	2	Brake	1		
2	910200200060	1	Screw	8		
3	910400500006	1	Spring Washer	9		
4	910400100010	1	Flat Washer	4		
5	910400500010	1	Spring Washer	4		
6	910100300071	1	Bolt	4		
7	504413520001	2	Wheel Mount	1		
8	910400300005	1	Flat Washer	1		
9	910200200058	1	Screw	1		
10	504413520002	2	Bracket	1		
11	910200200075	1	Screw	4		
12	910400500007	1	Spring Washer	4		
13	910600100010	1	Cylindrical Pin	2		
14	940900400002	1	Drive Unit	1		**See 534746013502**

1= Supply as package. 2= Supply with constraints. 3= Phasing-out supply. 4= Supply as assembly. 5= Check other tables.

02 Drive Assembly 1.3kW (534746013502)

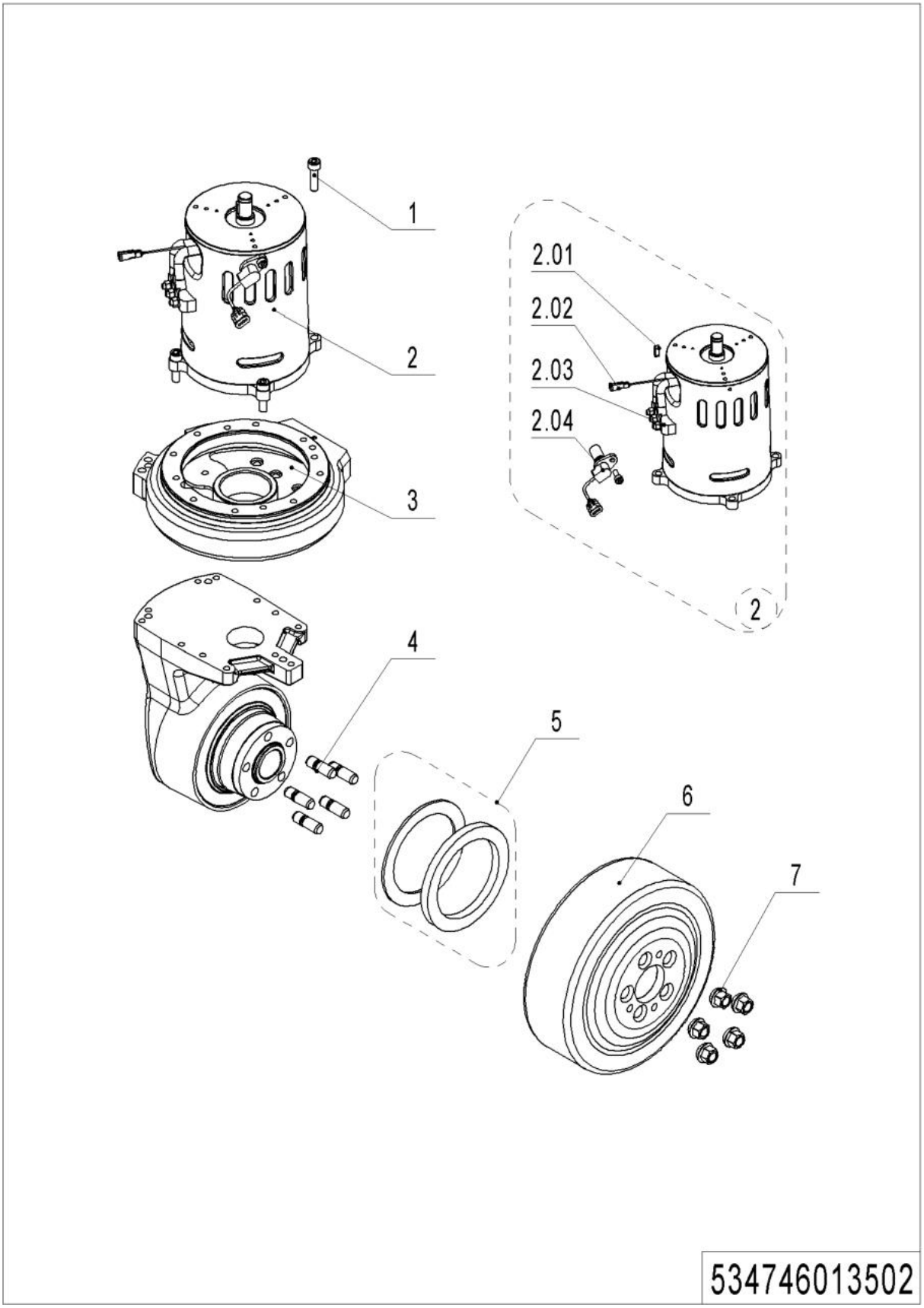

1= Supply as package. 2= Supply with constraints. 3= Phasing-out supply. 4= Supply as assembly. 5= Check other tables.

02 Drive Assembly 1.3kW (534746013502)

No.	Item Code	Mark	Item Description	Qty.	Substitute	Note
1	504498520016	1	Screw	4		
2	504498510005	2	Motor	1		
2.01	504498520011	2	Feather Key	1		
2.02	504498520012	2	Sensor	1		
2.03	504498520013	2	Wiring Board	1		
2.04	504498520010	2	Sensor	1		
3	504498510002	2	Rotary Table Kit	1		
4	504498520005	2	Bolt	5		
5	504498510003	2	Seal Kit	1		
6	940300400005		WheelΦ230x70	1		
7	504498520003	1	Nut	5		

Chapter 2: Hydraulic System

01 Hydraulic System (504446024001)

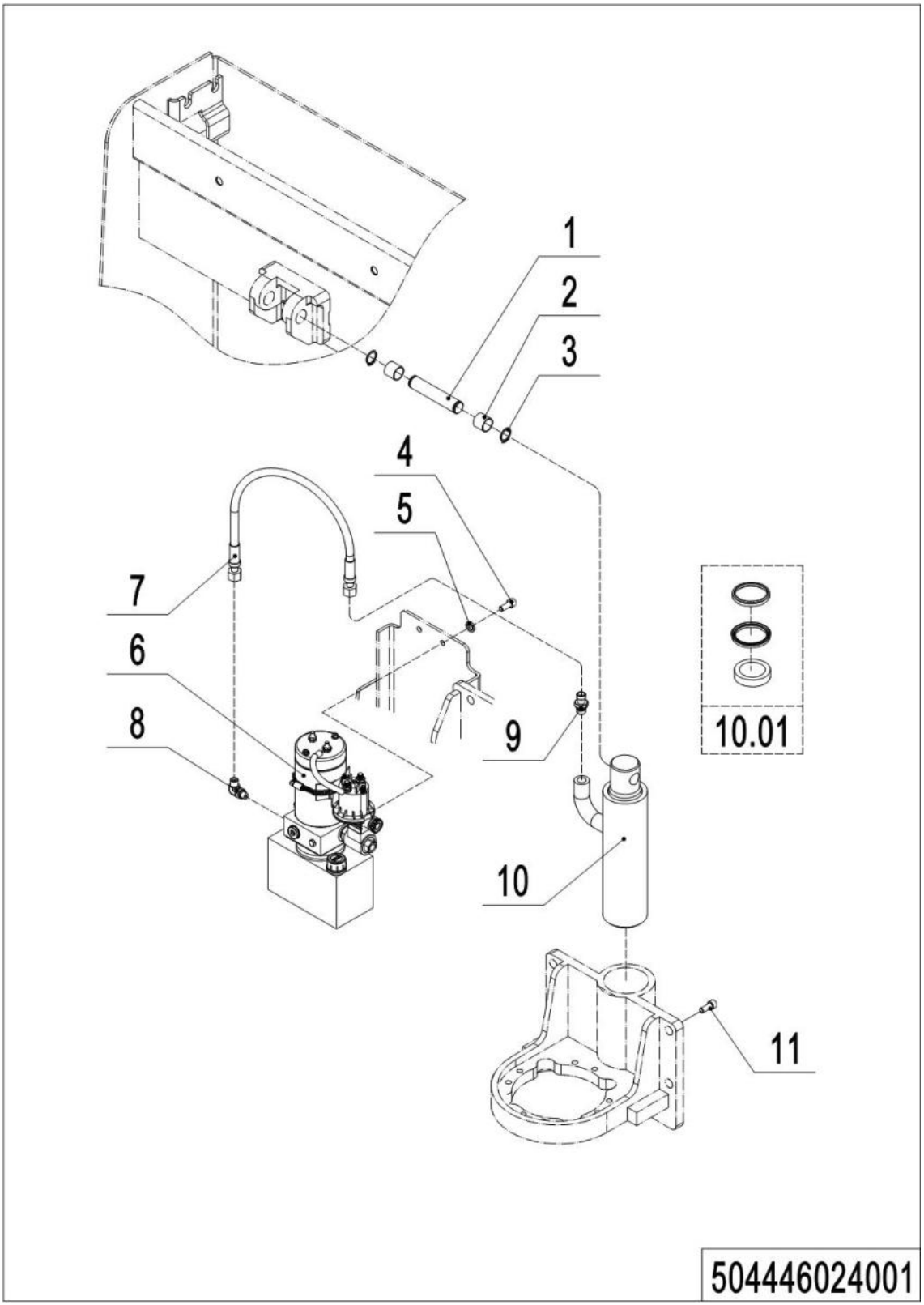

1= Supply as package. 2= Supply with constraints. 3= Phasing-out supply. 4= Supply as assembly. 5= Check other tables.

01 Hydraulic System (504446024001)

No.	Item Code	Mark	Item Description	Qty.	Substitute	Note
1	505638520033	2	Pin	1		
2	940500100019	1	Bushing	2		
3	910401300011	1	Circlip	2		
4	910200200055		Screw	2		
5	910400500006	1	Spring Washer	2		
6	950900100021		Pump Unit	1		See 504446024002
7	504424020005		Hose	1		
8	950401100002		Joint	1		
9	950400400001		Joint	1		
10	504424010001	2	Cylinder	1		
10.01	504498510000	1	Seal Kit	1		
11	910200200075	1	Screw	1		

02 Hydraulic Power Unit (504446024002)

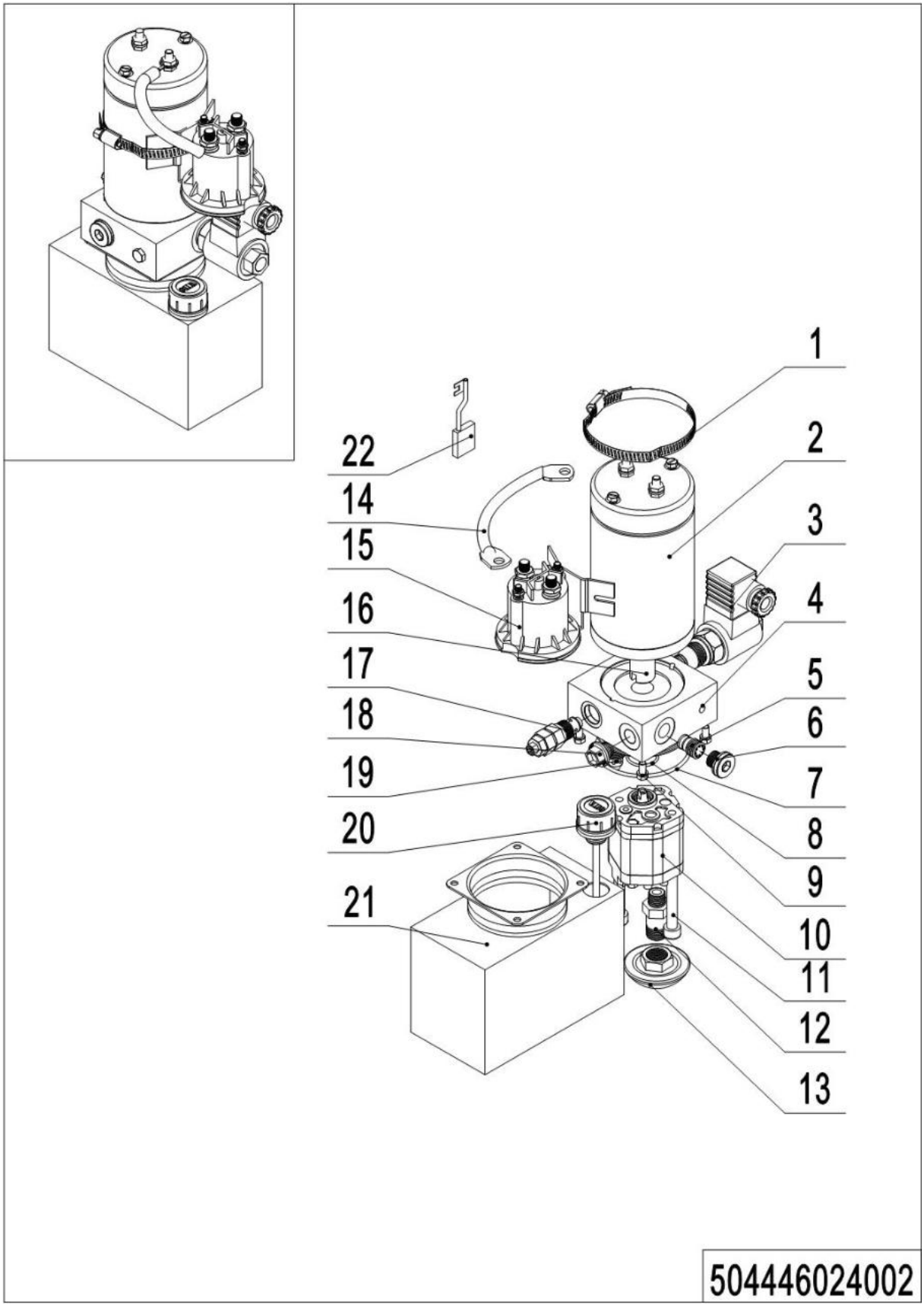

1= Supply as package. 2= Supply with constraints. 3= Phasing-out supply. 4= Supply as assembly. 5= Check other tables.

02 Hydraulic Power Unit (504446024002)

No.	Item Code	Mark	Item Description	Qty.	Substitute	Note
--	950900100021		Pump Unit	1		
1	504498520017	2	Hoop	1		
2	504498510007	2	Motor	1		
3	504498510011	2	Magnetic Valve	1		
4	504498520018	2	Valve Block	1		
5	504498510012	2	Check Valve	1		
6	504498520019	2	End Cap	2		
7	504498520020	2	O-Ring	1		
8	910800100063	2	O-Ring	1		
9	504498520022	2	Bolt	4		
10	504498510013	2	Gear Pump	1		
11	504498520023	2	Bolt	2		
12	504498520024	2	Oil Tube	1		
13	504498520025	2	Filter	1		
14	504498520026	2	Cables	1		
15	504498510014	2	Switch	1		
16	504498520027	2	Coupling	1		
17	504498510015	2	Overflow Valve	1		
18	504498520028	2	End Cap	1		
19	504498510016	2	Compensation Valve	1		
20	504498520029	2	Cap-Tank	1		
21	504498520030	2	Tank	1		
22	504498510017	2	Carbon Brush	1		

Chapter 3: Truck Frame

01 Truck Body (504446021501)

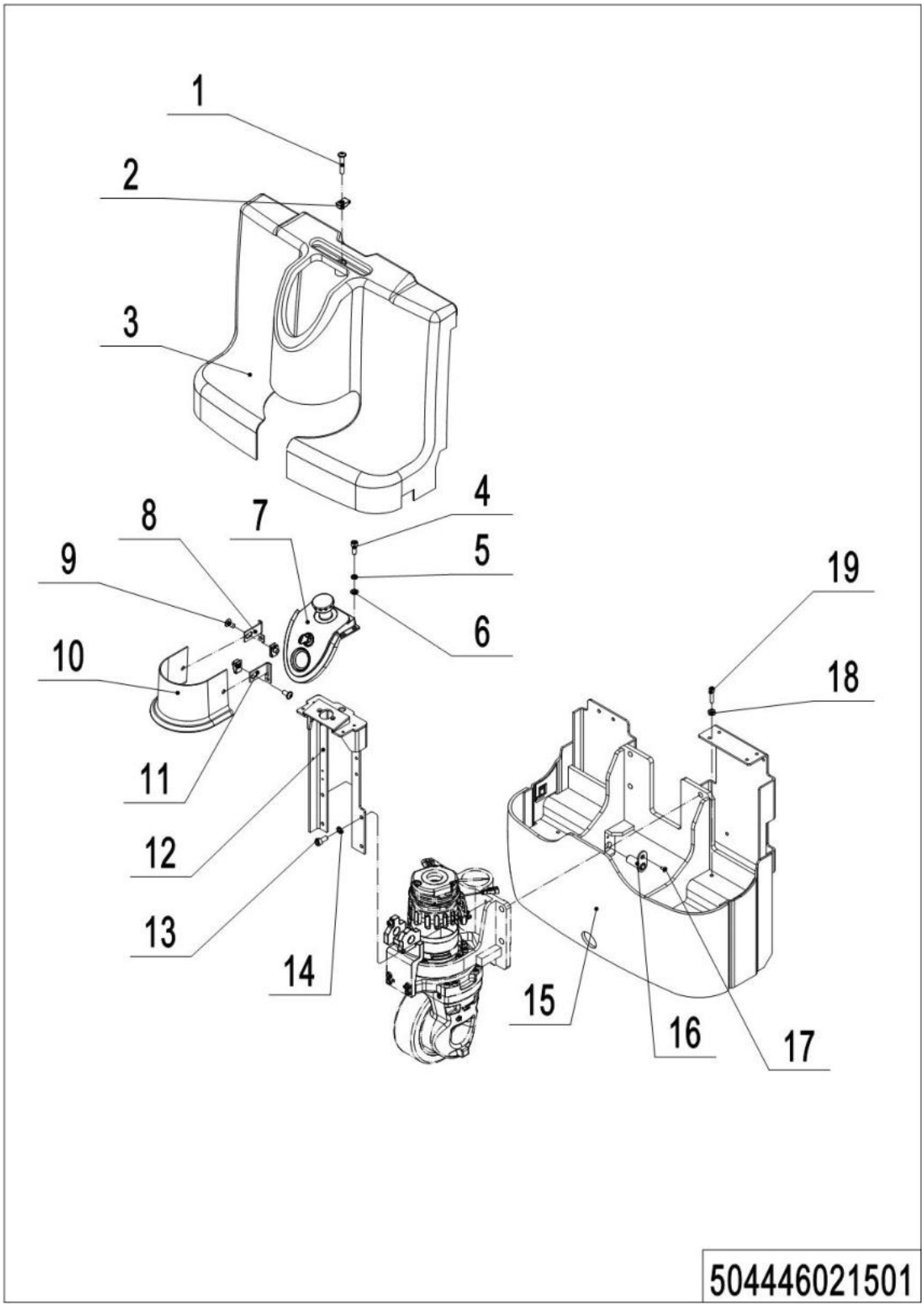

1= Supply as package. 2= Supply with constraints. 3= Phasing-out supply. 4= Supply as assembly. 5= Check other tables.

01 Truck Body (504446021501)

No.	Item Code	Mark	Item Description	Qty.	Substitute	Note
1	941100100006	1	Screw	1		
2	940400400003	1	Cage Nut	3		
3	504421520019		Protective Cover	1		
4	910200200035	1	Screw	4		
5	910400500005	1	Spring Washer	4		
6	910400100005	1	Flat Washer	4		
7	504410020001		Protective Cover	1		
8	504410020026		Mounting Plate	1		
9	941100100007	1	Screw	2		
10	504421520020		Protective Cover	1		
11	504410020027		Mounting Plate	1		
12	504421510002	1	Bracket	1		
13	910200200055	1	Screw	4		
14	910400500006	1	Spring Washer	4		
15	504421510001	2	Chassis(EU)	1		
15	504421510003	2	Chassis(USA)	1		
16	505921510002		Pin	2		
17	910200400016	1	Screw	2		
18	910300100007	1	Nut	2		
19	910200200081	1	Screw	2		

1= Supply as package. 2= Supply with constraints. 3= Phasing-out supply. 4= Supply as assembly. 5= Check other tables.

02 Chassis(EU) (504746038501)

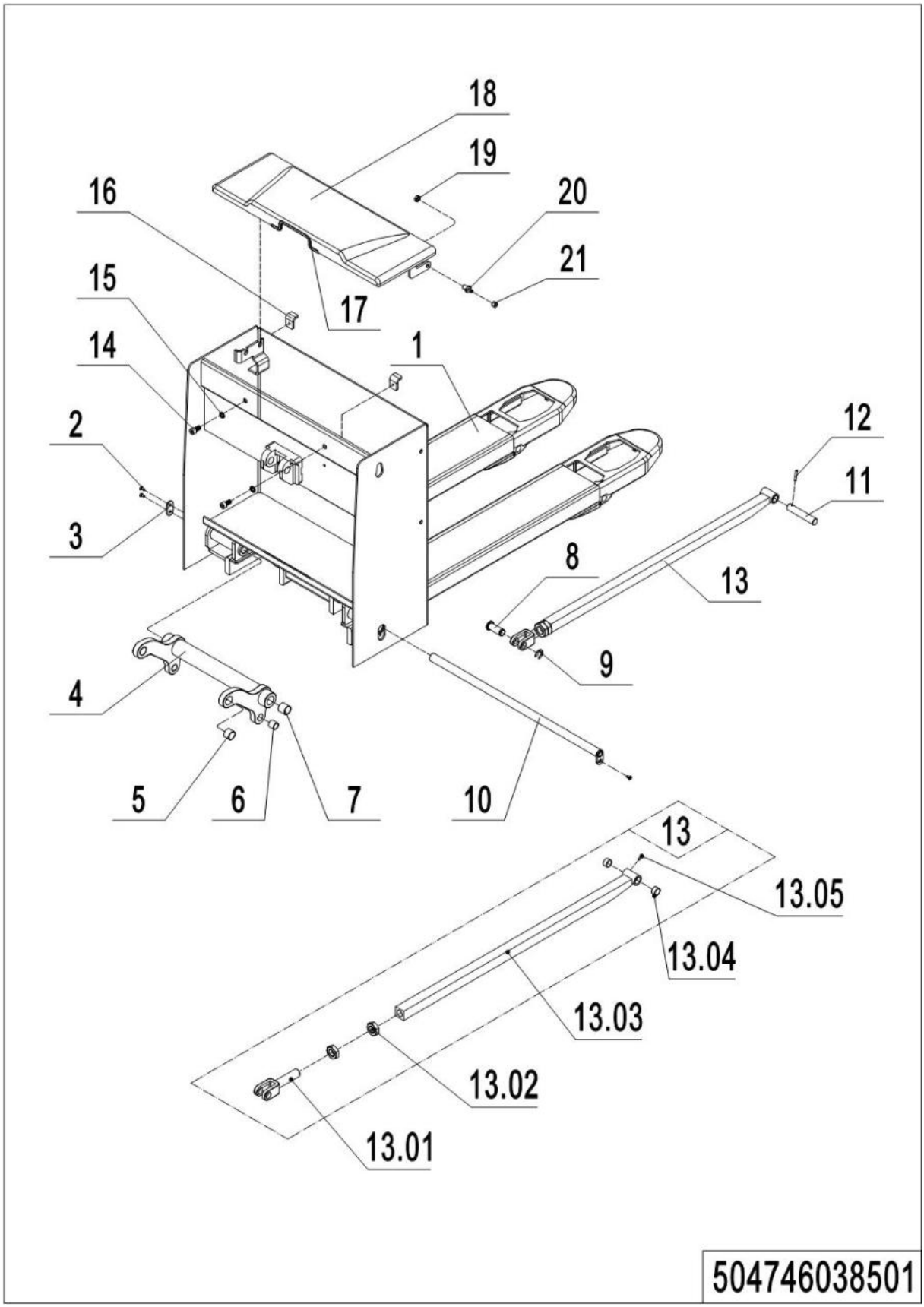

1= Supply as package. 2= Supply with constraints. 3= Phasing-out supply. 4= Supply as assembly. 5= Check other tables.

02 Chassis(EU) (504746038501)

No.	Item Code	Mark	Item Description	Qty.	Substitute	Note
1	504738510046	2	Chassis(EU540x800)	1		
1	504738510035	2	Chassis(EU685x800)	1		
1	504738510047	2	Chassis(EU540x900)	1		
1	504738510049	2	Chassis(EU685x900)	1		
1	504738510050	2	Chassis(EU540x1000)	1		
1	504738510018	2	Chassis(EU685x1000)	1		
1	504738510001	2	Chassis(EU540x1150)	1		
1	504738510005	2	Chassis(EU685x1150)	1		
1	504738510006	2	Chassis(EU540x1220)	1		
1	504738510003	2	Chassis(EU685x1220)	1		
1	504738510029	2	Chassis(EU540x1350)	1		
1	504738510031	2	Chassis(EU685x1350)	1		
1	504738510032	2	Chassis(EU540x1400)	1		
1	504738510034	2	Chassis(EU685x1400)	1		
1	504738510020	2	Chassis(EU540x1500)	1		
1	504738510024	2	Chassis(EU685x1500)	1		
1	504738510037	2	Chassis(EU540x1600)	1		
1	504738510039	2	Chassis(EU685x1600)	1		
1	504738510022	2	Chassis(EU540x1800)	1		
1	504738510011	2	Chassis(EU685x1800)	1		
1	504738510040	2	Chassis(EU540x2000)	1		
1	504738510042	2	Chassis (EU685x2000)	1		
1	504738510043	2	Chassis(EU540x2400)	1		
1	504738510045	2	Chassis(EU685x2400)	1		
2	910200400016	1	Screw	3		
3	505638520031		Fixing Plate	1		
4	505638510001		Rise Arm	1		**540**
4	505638510007		Rise Arm	1		**685**
5	940500100027		Bushing	2		
6	940500100019		Bushing	2		

1= Supply as package. 2= Supply with constraints. 3= Phasing-out supply. 4= Supply as assembly. 5= Check other tables.

02 Chassis(EU) (504746038501) Continuation1

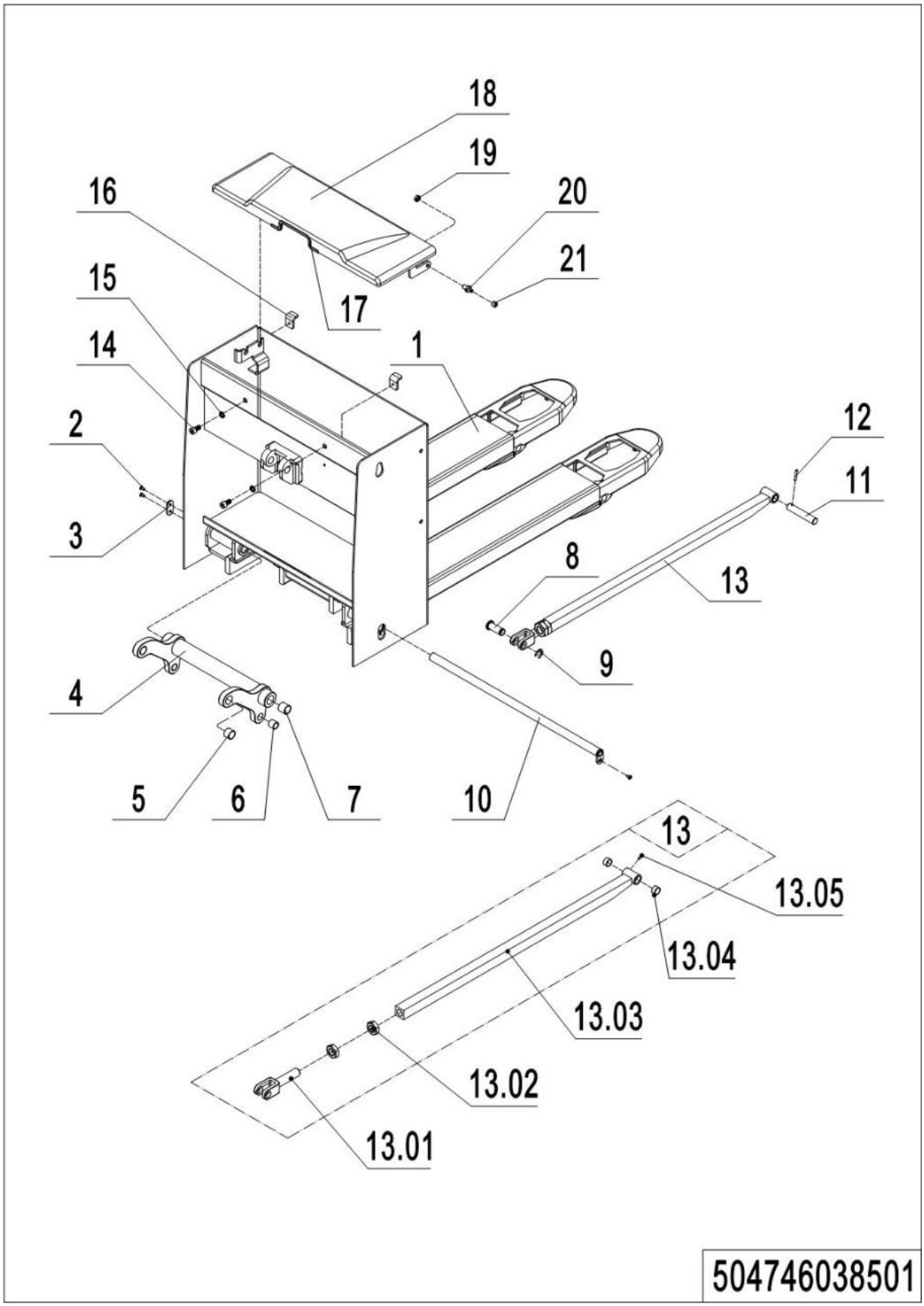

1= Supply as package. 2= Supply with constraints. 3= Phasing-out supply. 4= Supply as assembly. 5= Check other tables.

02 Chassis(EU) (504746038501) Continuation1

No.	Item Code	Mark	Item Description	Qty.	Substitute	Note
7	940500100032		Bushing	2		
8	505638520034		Pin	2		
9	910401700005	1	Circlip	2		
10	505638510003		Pin			
11	505638520037		Axle	2		
12	910600500004		Spring Pin	2		
13	504798510015	2	Push Rod Kit(800)	2		800
13	504798510006	2	Push Rod Kit(900)	2		900
13	504798510007	2	Push Rod Kit(1000)	2		1000
13	504798510003	2	Push Rod Kit(1150)	2		1150
13	504798510004	2	Push Rod Kit(1220)	2		1220
13	504798510008	2	Push Rod Kit(1350)	2		1350
13	504798510009	2	Push Rod Kit(1400)	2		1400
13	504798510010	2	Push Rod Kit(1500)	2		1500
13	504798510011	2	Push Rod Kit(1600)	2		1600
13	504798510012	2	Push Rod Kit(1800)	2		1800
13	504798510013	2	Push Rod Kit(2000)	2		2000
13	504798510014	2	Push Rod Kit(2400)	2		2400
13.01	505638520035		Push Rod Fork	2		
13.02	910300400010	1	Nut	4		
13.03	504738510036	2	Push Rod (800)	2		800
13.03	504738510048	2	Push Rod (900)	2		900
13.03	504738510019	2	Push Rod (1000)	2		1000
13.03	504738510002	2	Push Rod (1150)	2		1150
13.03	504738510004	2	Push Rod (1220)	2		1220
13.03	504738510030	2	Push Rod (1350)	2		1350
13.03	504738510033	2	Push Rod (1400)	2		1400
13.03	504738510021	2	Push Rod (1500)	2		1500
13.03	504738510038	2	Push Rod (1600)	2		1600
13.03	504738510023	2	Push Rod (1800)	2		1800

02 Chassis(EU, Sideways Exchange) Continuation2

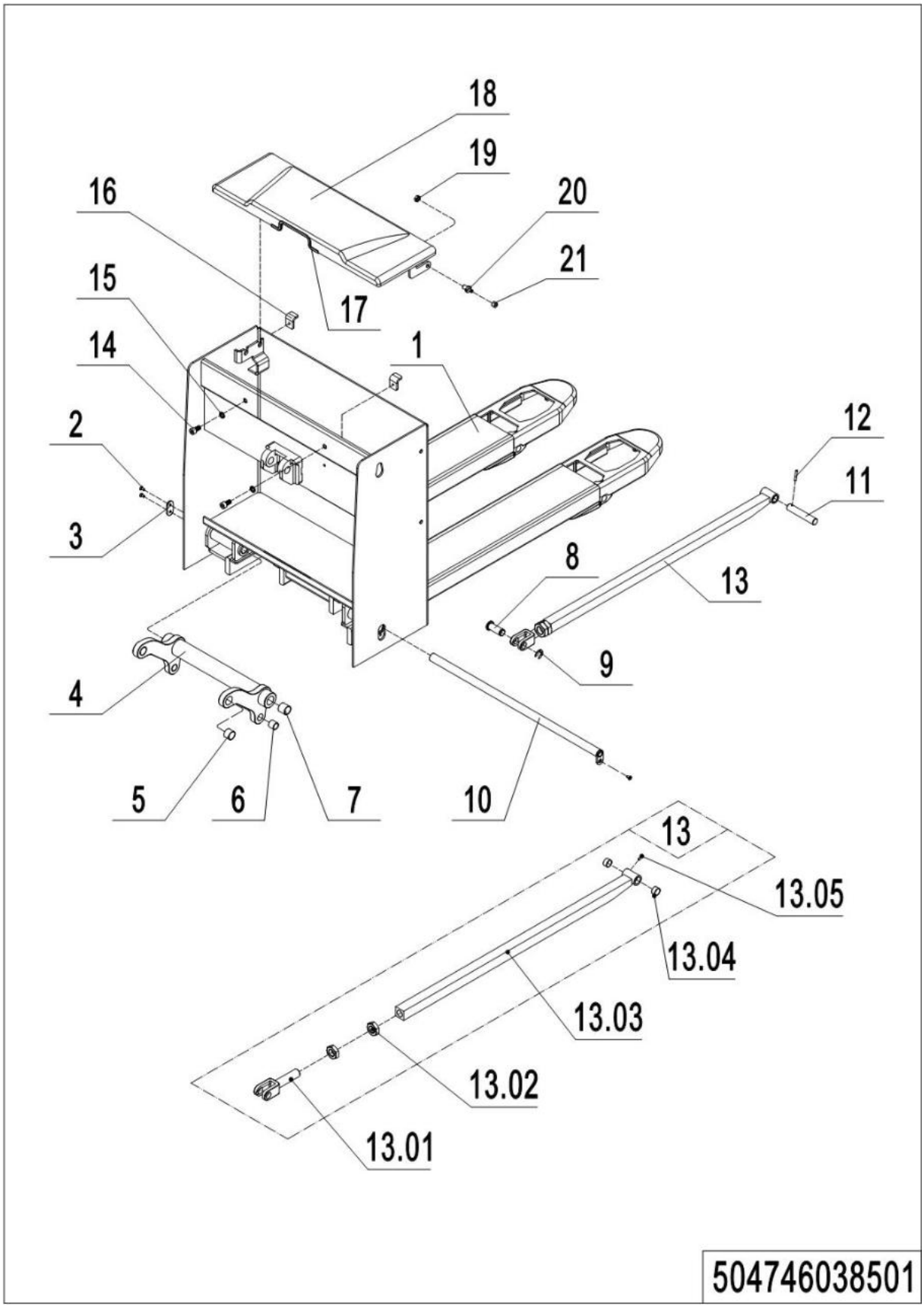

02 Chassis(EU, Sideways Exchange) Continuation2

No.	Item Code	Mark	Item Description	Qty.	Substitute	Note
13.03	504738510041	2	Push Rod (2000)	2		2000
13.03	504738510044	2	Push Rod (2400)	2		2400
13.04	940500100012		Bushing	4		
13.05	911200100001	1	Oil Cup	2		
14	910200200056	1	Screw	2		
15	910400500006	1	Spring Washer	2		
16	504438520017		Stop Plate	2		
17	505921020007		Sealing Strip	1		
18	505621010000		Cell Cover	1		
19	910300300005		Nut	2		
20	505621020005		Axle	2		
21	505621020004		Crash Pad	2		

03 Chassis(EU, Sideways Exchange) (504746038502)

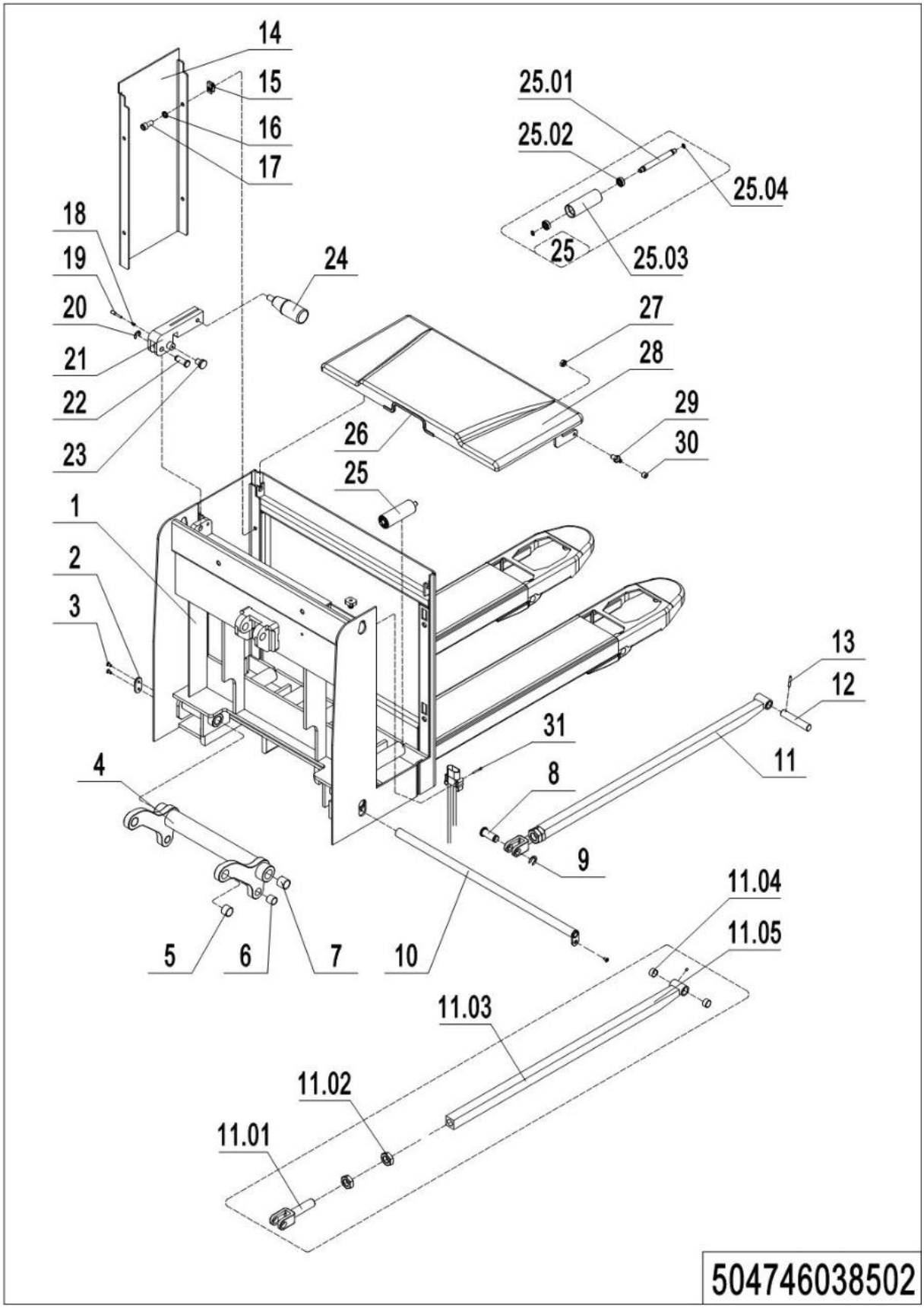

03 Chassis(EU, Sideways Exchange) (504746038502)

No.	Item Code	Mark	Item Description	Qty.	Substitute	Note
1	504738510053	2	Chassis(EU540x800)	1		
1	504738510054	2	Chassis(EU685x800)	1		
1	504738510055	2	Chassis(EU540x900)	1		
1	504738510056	2	Chassis(EU685x900)	1		
1	504738510057	2	Chassis(EU540x1000)	1		
1	504738510059	2	Chassis(EU685x1000)	1		
1	504738510052	2	Chassis(EU685x1150)	1		
1	504738510051	2	Chassis(EU540x1220)	1		
1	504738510060	2	Chassis(EU540x1350)	1		
1	504738510062	2	Chassis(EU685x1350)	1		
1	504738510063	2	Chassis(EU540x1400)	1		
1	504738510065	2	Chassis(EU685x1400)	1		
1	504738510066	2	Chassis(EU540x1500)	1		
1	504738510068	2	Chassis(EU685x1500)	1		
1	504738510069	2	Chassis(EU540x1600)	1		
1	504738510071	2	Chassis(EU685x1600)	1		
1	504738510072	2	Chassis(EU540x1800)	1		
1	504738510074	2	Chassis(EU685x1800)	1		
1	504738510075	2	Chassis(EU540x2000)	1		
1	504738510077	2	Chassis(EU685x2000)	1		
1	504738510078	2	Chassis(EU540x2400)	1		
1	504738510080	2	Chassis(EU685x2400)	1		
2	505638520031		Fixing Plate	1		
3	910200400016	1	Screw	3		
4	505638510001		Rise Arm	1		
4	505638510007		Rise Arm	1		
5	940500100027		Bushing	2		
6	940500100019		Bushing	2		
7	940500100032		Bushing	2		
8	505638520034		Pin	2		

1= Supply as package. 2= Supply with constraints. 3= Phasing-out supply. 4= Supply as assembly. 5= Check other tables.

03 Chassis(EU, Sideways Exchange) (504746038502) Continuation1

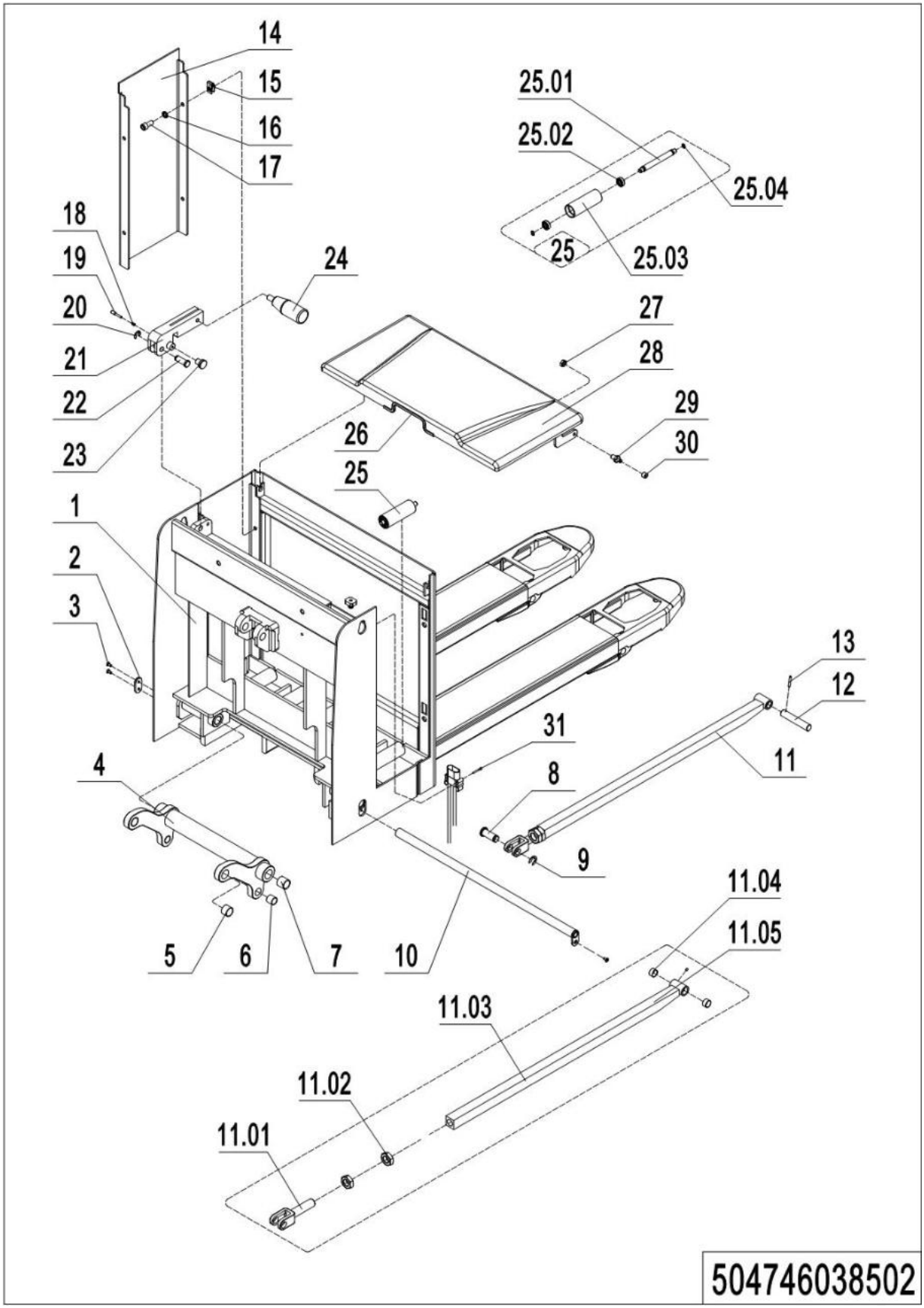

03 Chassis(EU, Sideways Exchange) (504746038502) Continuation1

No.	Item Code	Mark	Item Description	Qty.	Substitute	Note
9	910401700005	1	Circlip	2		
10	505638510003		Pin	1		
11	504798510005	2	Push Rod Kit(800)	2		800
11	504798510006	2	Push Rod Kit(900)	2		900
11	504798510007	2	Push Rod Kit(1000)	2		1000
11	504798510003	2	Push Rod Kit(1150)	2		1150
11	504798510004	2	Push Rod Kit(1220)	2		1220
11	504798510008	2	Push Rod Kit(1350)	2		1350
11	504798510009	2	Push Rod Kit(1400)	2		1400
11	504798510010	2	Push Rod Kit(1500)	2		1500
11	504798510011	2	Push Rod Kit(1600)	2		1600
11	504798510012	2	Push Rod Kit(1800)	2		1800
11	504798510013	2	Push Rod Kit(2000)	2		2000
11	504798510014	2	Push Rod Kit(2400)	2		2400
11.01	505638520035		Push Rod Fork	2		
11.02	910300400010	1	Nut	4		
11.03	504738510048	2	Push Rod (900)	2		800
11.03	504738510019	2	Push Rod (1000)	2		900
11.03	504738510058	2	Push Rod (1000, EU)	2		1000
11.03	504738510002	2	Push Rod (1150)	2		1150
11.03	504738510010	2	Push Rod (1220)	2		1220
11.03	504738510061	2	Push Rod (1350, EU)	2		1350
11.03	504738510064	2	Push Rod (1400, EU)	2		1400
11.03	504738510067	2	Push Rod (1500, EU)	2		1500
11.03	504738510070	2	Push Rod (1600, EU)	2		1600
11.03	504738510073	2	Push Rod (1800, EU)	2		1800
11.03	504738510076	2	Push Rod (2000, EU)	2		2000
11.03	504738510079	2	Push Rod (2400, EU)	2		2400
11.04	940500100012		Bushing	4		
11.05	911200100001	1	Oil cup	2		

03 Chassis(EU, Sideways Exchange) (504746038502) Continuation2

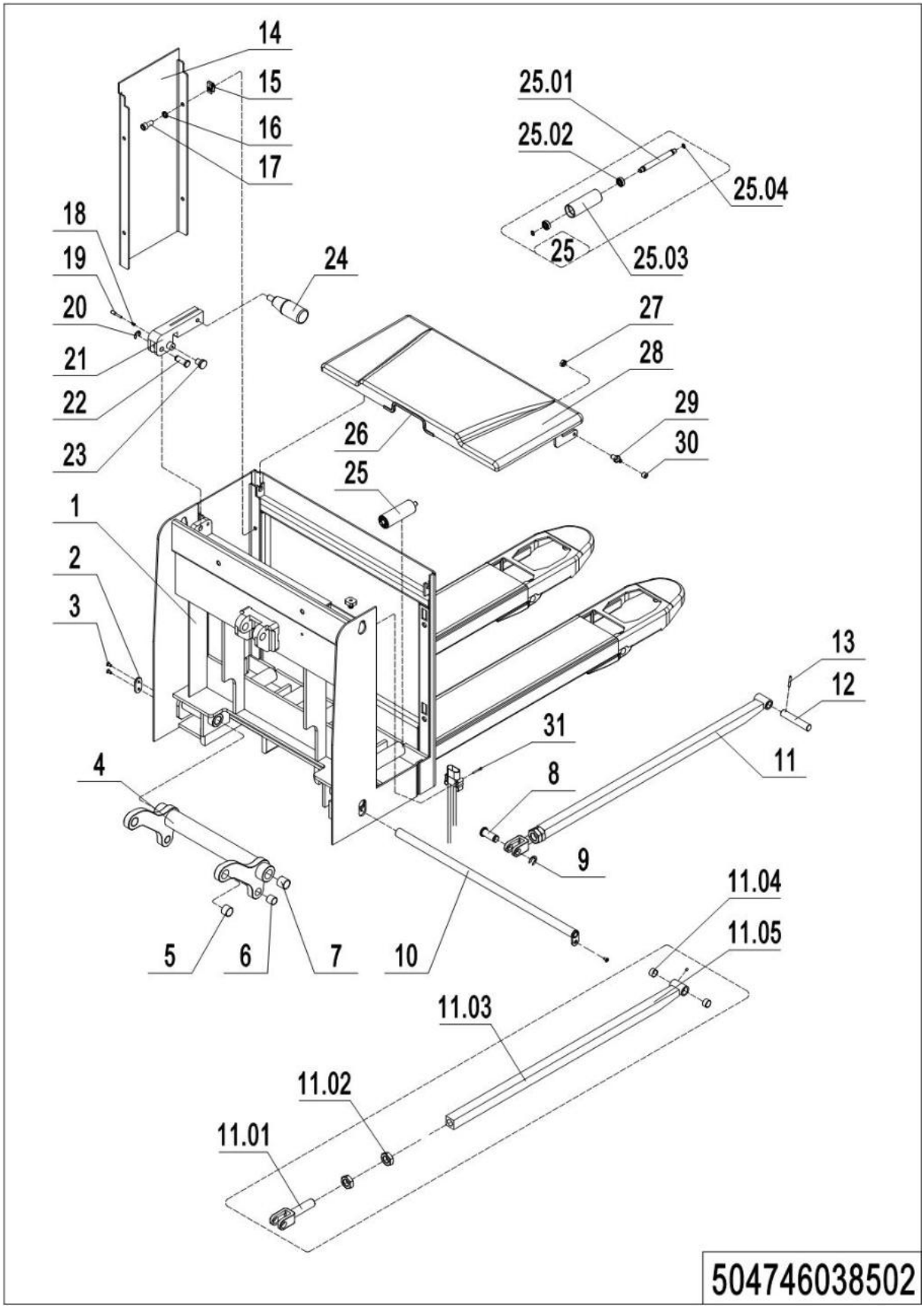

03 Chassis(EU, Sideways Exchange) (504746038502) Continuation2

No.	Item Code	Mark	Item Description	Qty.	Substitute	Note
12	505638520037		Axle	2		
13	910600500004		Spring Pin	2		
14	504738520028		Panel	1		
15	940400400003		Cage Nut	4		
16	910400500007		Spring Washer	4		
17	910200200076		Screw	4		
18	940400500001		Spring	1		
19	505638520122		Screw	1		
20	910401700004		Circlip	1		
21	505638510026		Lock	1		
22	505638520117		Pin	1		
23	505638520123		Handle	1		
24	911000400001		Tiller	1		
25	505638510028		Roller	6		
25.01	505638520119		Axle	6		
25.02	910700200017		Bearing	12		
25.03	505638520120		Roller	6		
25.04	910401300006		Circlip	12		
26	505921020007		Sealing Strip	1		
27	910300300005		Nut	2		
28	505621010002		Cell Cover	1		
29	505621020004		Crash Pad	2		
30	505621020004		Crash Pad	2		
31	91020020004		Screw	2		

04 Chassis(US) (504746038503)

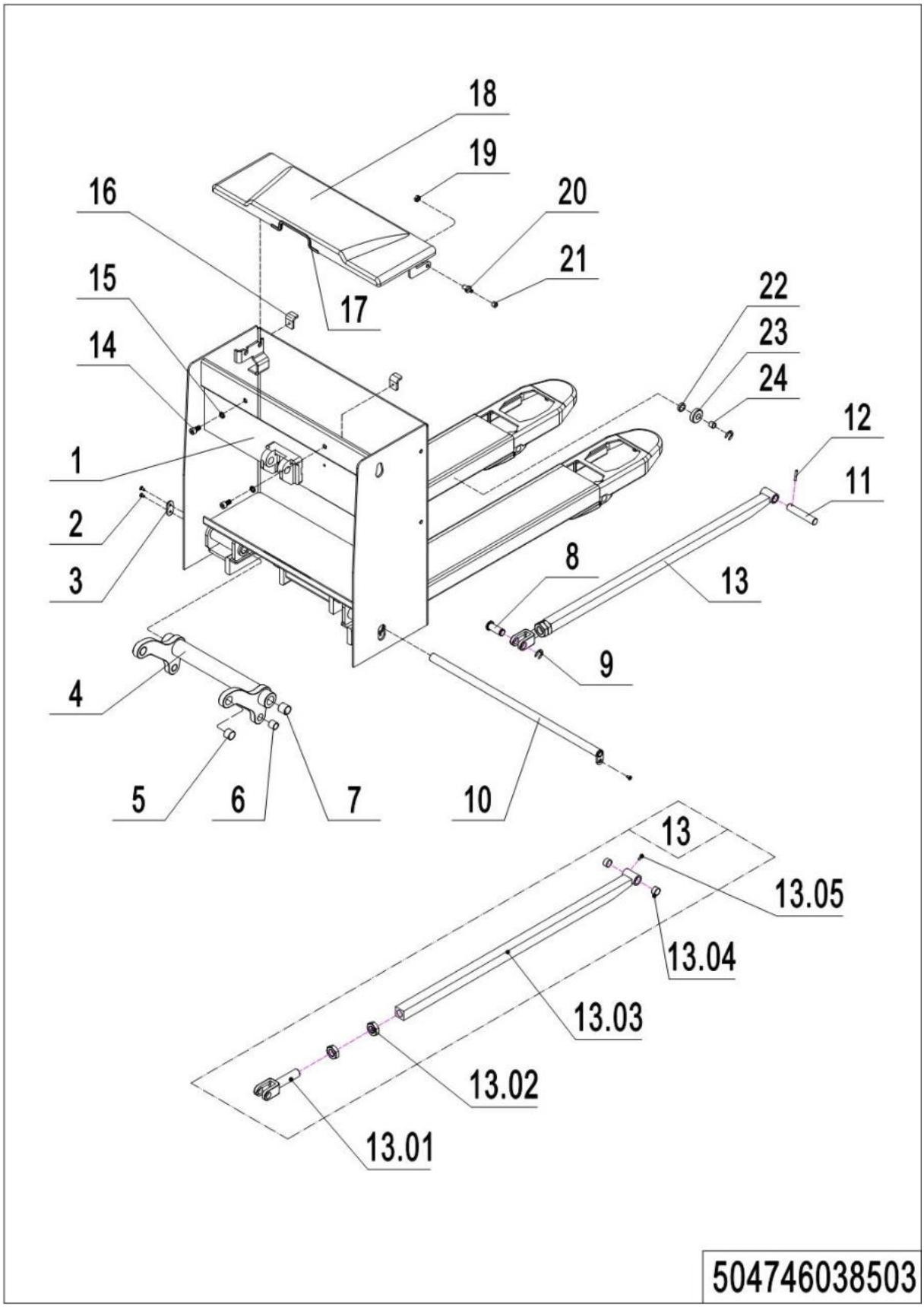

1= Supply as package. 2= Supply with constraints. 3= Phasing-out supply. 4= Supply as assembly. 5= Check other tables.

04 Chassis(US) (504746038503)

No.	Item Code	Mark	Item Description	Qty.	Substitute	Note
1	504738510014	2	Chassis (US685x1220)	1		
2	910200400016	1	Screw	3		
3	505638520031		Fixing Plate	1		
4	505638510007		Rise Arm	1		
5	940500100027		Bushing	2		
6	940500100019		Bushing	2		
7	940500100032		Bushing	2		
8	505638520034		Pin	2		
9	910401700005	1	Circlip	6		
10	505638510003		Pin	1		
11	505638520037		Axle	2		
12	910600500004		Spring Pin	2		
13	504798510004	2	Push Rod Kit(1220)	2		1220
13.01	505638520035		Push Rod Fork	2		
13.02	910300400010	1	Nut	4		
13.03	504738510004	2	Push Rod (1220)	2		1220
13.04	940500100012		Bushing	4		
13.05	911200100001	1	Oil Cup	2		
14	910200200056	1	Screw	2		
15	910400500006	1	Spring Washer	2		
16	504438520017		Stop Plate	2		
17	505921020007		Sealing Strip	1		
18	505621010000		Cell Cover	1		
19	910300300005		Nut	2		
20	505621020005		Axle	2		
21	505621020004		Crash Pad	2		
22	940600500014		Washer	4		
23	504738520053		Roller	4		
24	940500100017		Bushing	4		

05 Chassis(US, Sideways Exchange) (504746038504)

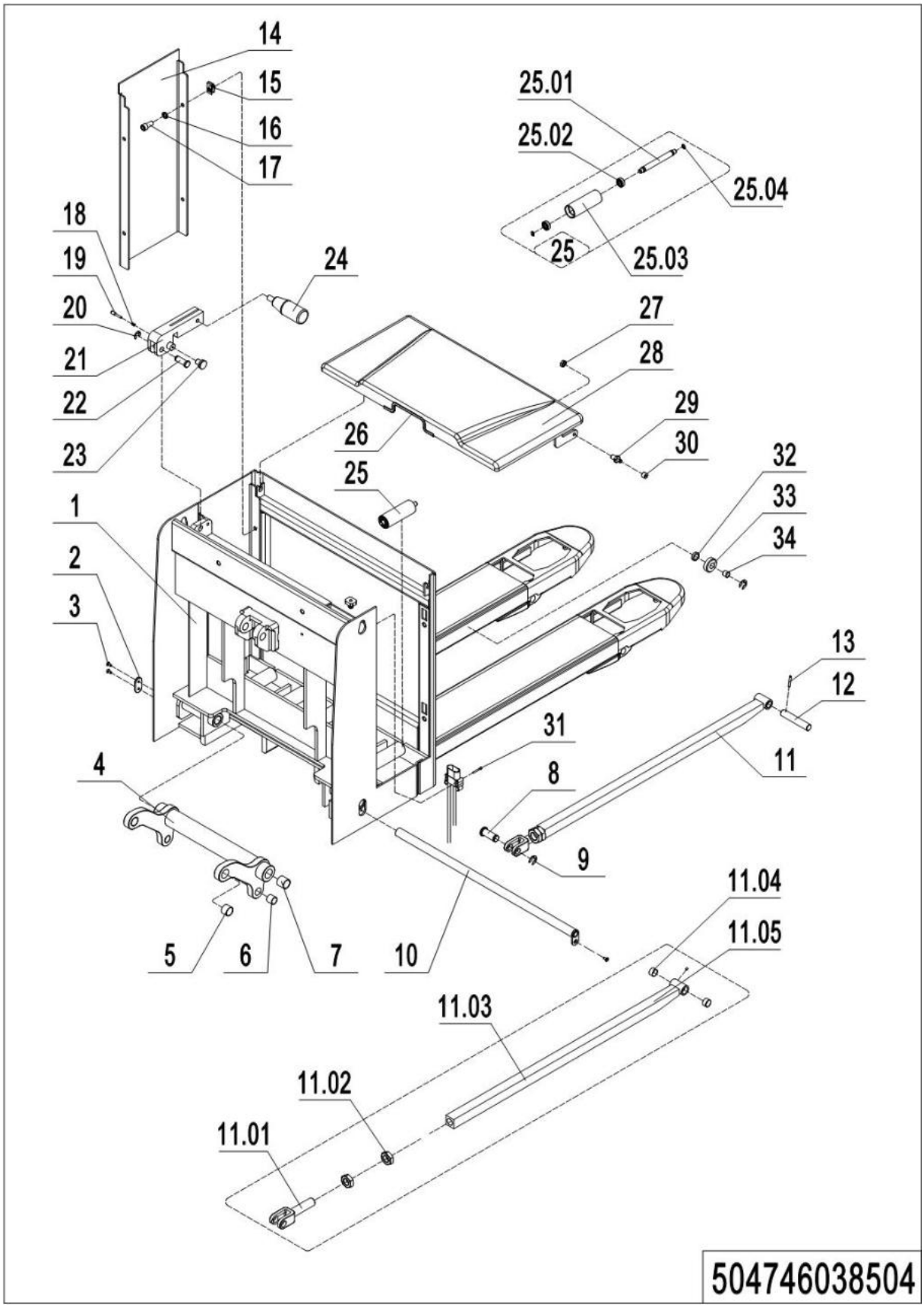

05 Chassis(US, Sideways Exchange) (504746038504)

No.	Item Code	Mark	Item Description	Qty.	Substitute	Note
1	504738510025	2	Chassis (US685x1220)	1		
2	505638520031		Fixing Plate	1		
3	910200400016	1	Screw	3		
4	505638510007		Rise Arm	1		
5	940500100027		Bushing	2		
6	940500100019		Bushing	2		
7	940500100032		Bushing	2		
8	505638520034		Pin	2		
9	910401700005	1	Circlip	6		
10	505638510003		Pin	1		
11	504798510004	2	Push Rod Kit (1220)	2		1220
11.01	505638520035		Push Rod Fork	2		
11.02	910300400010	1	Nut	4		
11.03	504738510010	2	Push Rod (1220)	2		1220
11.04	940500100012		Circlip	4		
11.05	911200100001	1	Oil cup	2		
12	505638520037		Axle	2		
13	910600500004		Spring Pin	2		
14	504738520028		Panel	1		
15	940400400003		Cage Nut	4		
16	910400500007		Spring Washer	4		
17	910200200076		Screw	4		
18	940400500001		Spring	1		
19	505638520122		Screw	1		
20	910401700004		Circlip	1		
21	505638510026		Lock	1		
22	505638520117		Pin	1		
23	505638520123		Handle	1		
24	911000400001		Tiller	1		
25	505638510028		Roller	6		

1= Supply as package. 2= Supply with constraints. 3= Phasing-out supply. 4= Supply as assembly. 5= Check other tables.

05 Chassis(US, Sideways Exchange) (504746038504) Continuation1

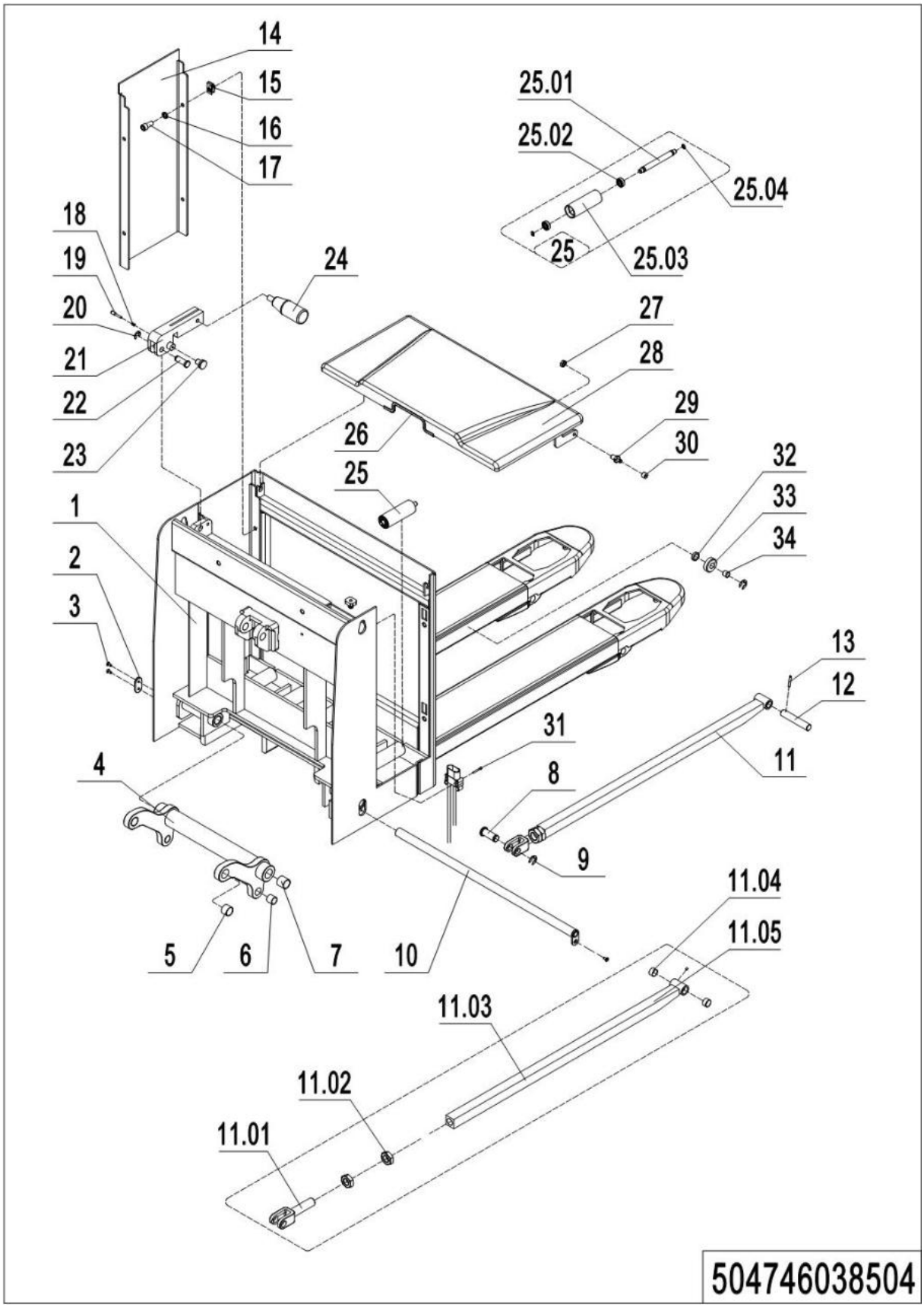

05 Chassis(US, Sideways Exchange) (504746038504) Continuation1

No.	Item Code	Mark	Item Description	Qty.	Substitute	Note
25.01	505638520119		Axle	6		
25.02	910700200017		Bearing	12		
25.03	505638520120		Roller	6		
25.04	910401300006		Circlip	12		
26	505921020007		Sealing Strip	1		
27	910300300005		Nut	2		
28	505621010002		Cell Cover	1		
29	505621020005		Axle	2		
30	505621020004		Crash Pad	2		
31	91020020004		Screw	2		
32	940600500014		Washer	4		
33	504738520053		Roller	4		
34	940500100017		Bushing	4		

Chapter 4: Steering System, Braking System, Wheels

01 Tiller (504446011001)

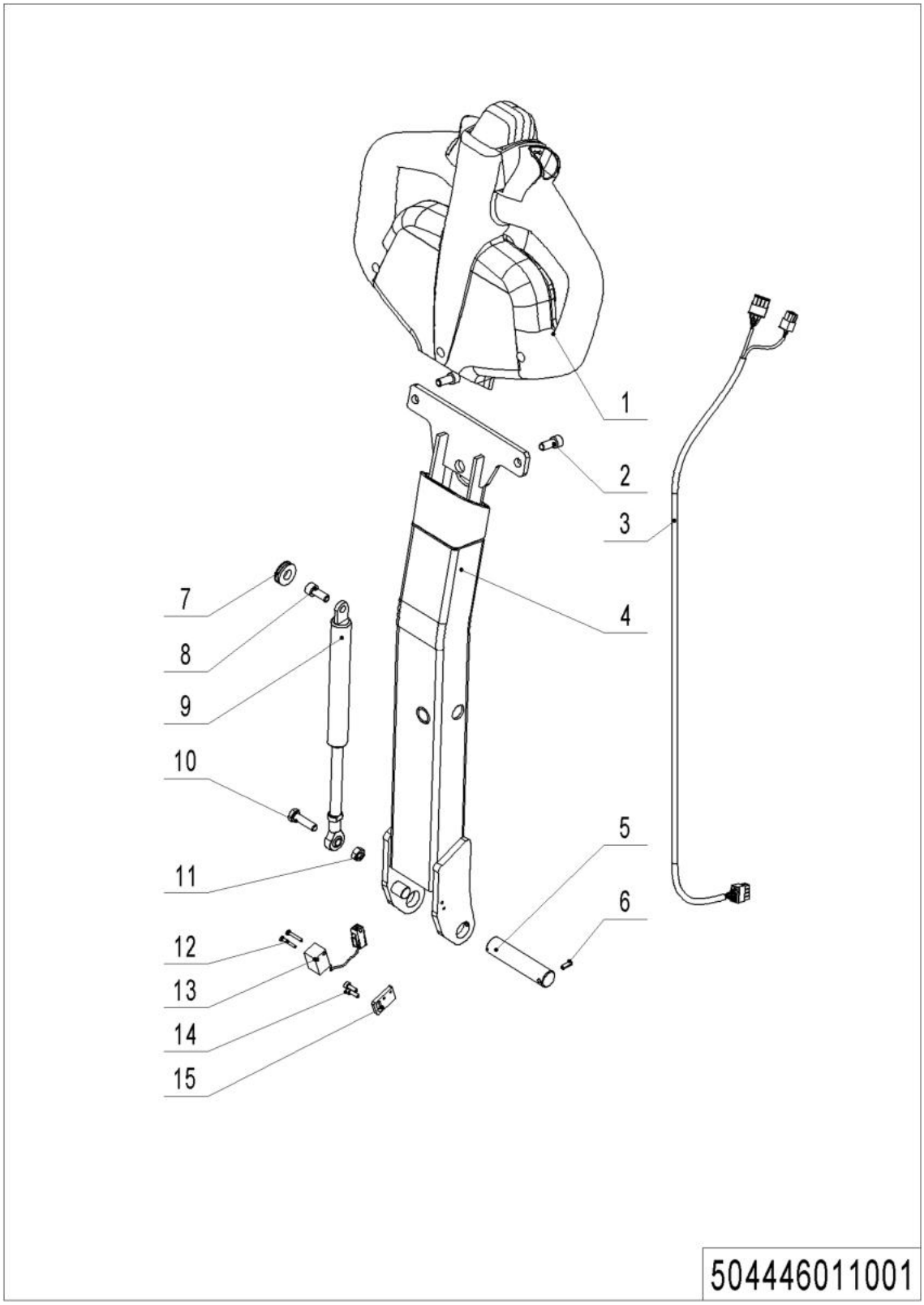

01 Tiller (504446011001)

No.	Item Code	Mark	Item Description	Qty.	Substitute	Note
1	922100100001		Tiller	1		**See 535946011002**
2	910200200057	1	Screw	2		
3	534733010001		Wire Harness	1		
4	504411010001		Tiller	1		
5	504411020011		Axle	1		
6	910600400009	1	Spring Pin	1		
7	502311020009		Close Plate	1		
8	941100400001	1	Screw	1		
9	940400100011		Air Spring	1		
10	910100300024	1	Bolt	1		
11	910300100006	1	Nut	1		
12	910200500015	1	Screw	2		
13	505633510002		Proximity Switch	1		
14	910200200014	1	Screw	2		
15	504411020009		Baseboard	1		

02 Tiller (535946011002)

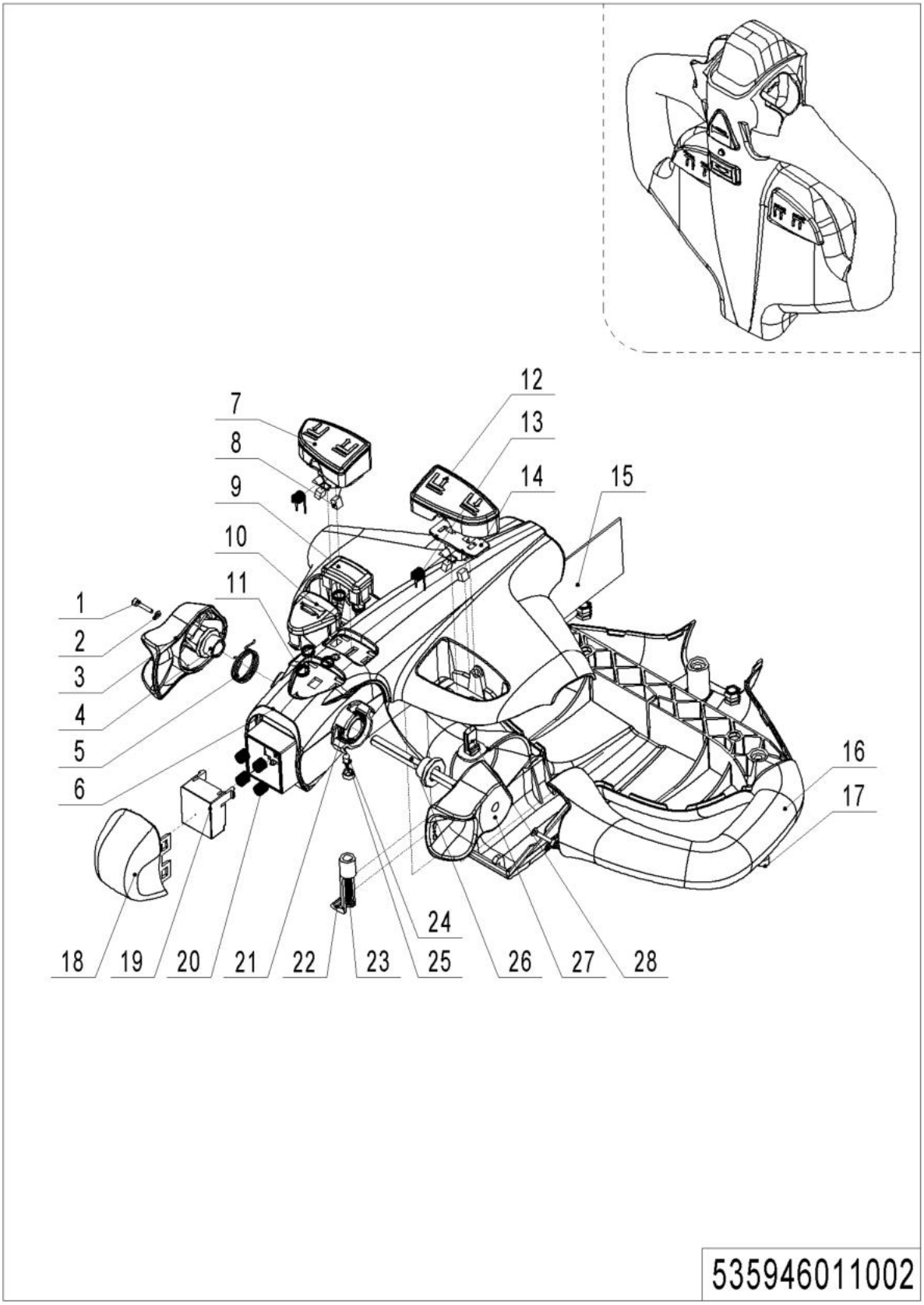

02 Tiller (535946011002)

No.	Item Code	Mark	Item Description	Qty.	Substitute	Note
--	922100100001		Tiller	1		
1	505698520008		Screw	2		
2	505698520009		Washer	2		
3	505698520001		Traction lever	1		
4	505698520004		Sleeve	2		
5	505698520027		Torsional Spring	1		
6	505698520014		Handle Cap	1		
7	505698520016		Button cap	1		
8	505698520005		Magnet	4		
9	505698520021		Button Cap	1		
10	505698520002		Horn Button	1		
11	505698520003		Spring	5		
12	505698520022		Button Cap	1		
13	505698520018		Torsional Spring	2		
14	505698520017		Fixing Base	2		
15	505698520028		circuit Board	1		
16	505698520015		Handle Cap	1		
17	505698520007		Screw	3		
18	505698520020		Button Cap-	1		
19	505698520019		Pedestal	1		
20	505698520006		Spring	4		
21	505698520026		Torsional Spring	1		
22	505698520012		Clamp	1		
23	505698520023		Screw	1		
24	505698520024		Light	1		
25	505698520025		Lamp Holder	1		
26	505698520011		Axle-Traction lever	1		
27	505698520010		Traction lever	1		
28	505698520013		Sensor	2		

03 Load Wheel (Tandem) (505646017001)

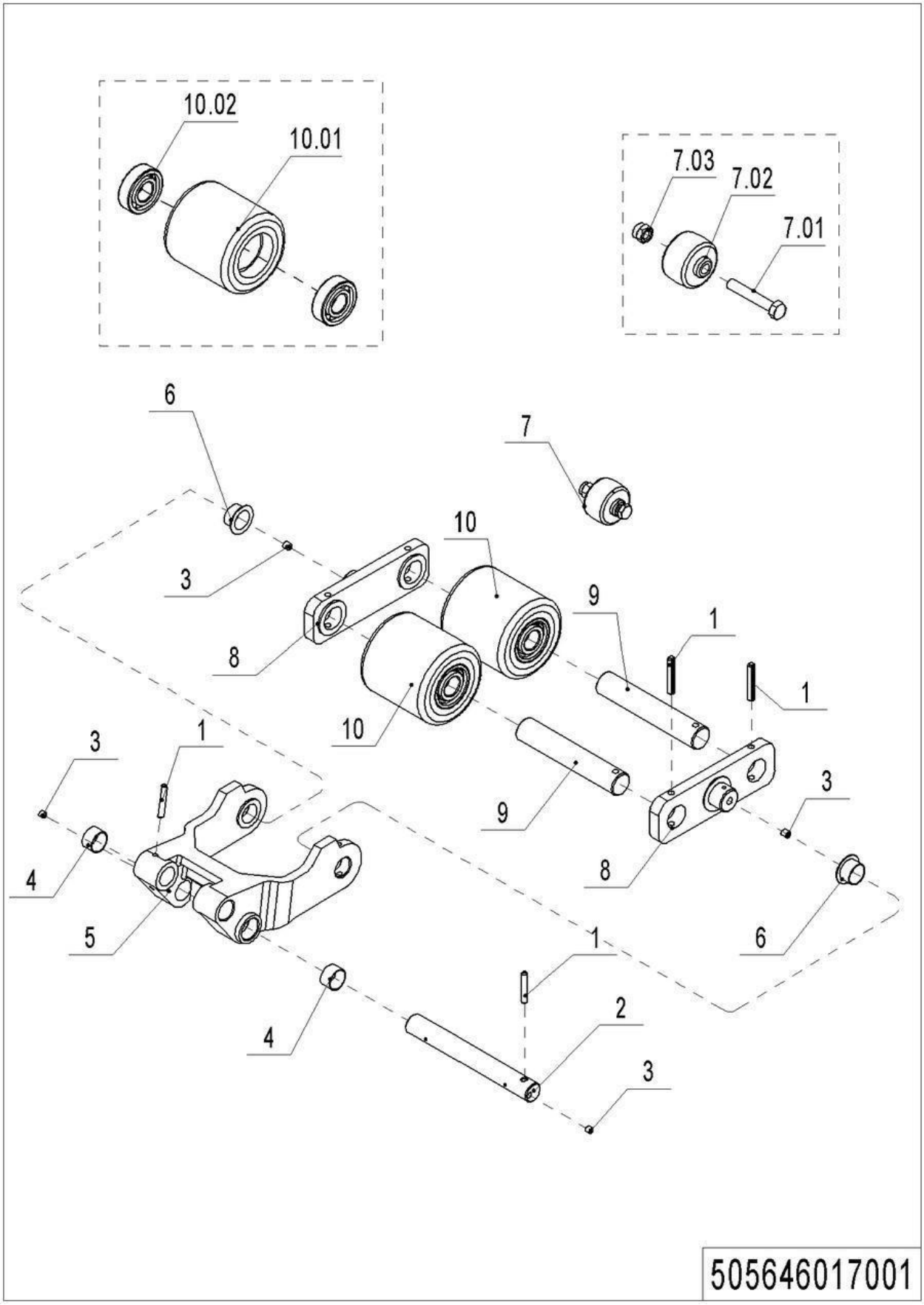

1= Supply as package. 2= Supply with constraints. 3= Phasing-out supply. 4= Supply as assembly. 5= Check other tables.

03 Load Wheel (Tandem) (505646017001)

No.	Item Code	Mark	Item Description	Qty.	Substitute	Note
1	910600400027	1	Spring Pin	8		
2	505638520038		Pin	2		
3	911200100001		Oil Cup	2		
4	940500100012		Bushing	4		
5	505638520036		Riser	2		
6	940500200003		Bushing	2		
7	502398510003		Pulley components	2		
7.01	910300500005	1	Nut	2		
7.02	505638520039		Running Pulley	2		
7.03	910100100035	1	Bolt	2		
8	505617020001		Plate	4		
9	505617020000		Axle	4		
10	505698510003		Wheel	4		
10.01	940300300010		WheelΦ84x84	4		
10.02	910700200019		Bearing	8		

04 Load Wheel (Single) (505646017002)

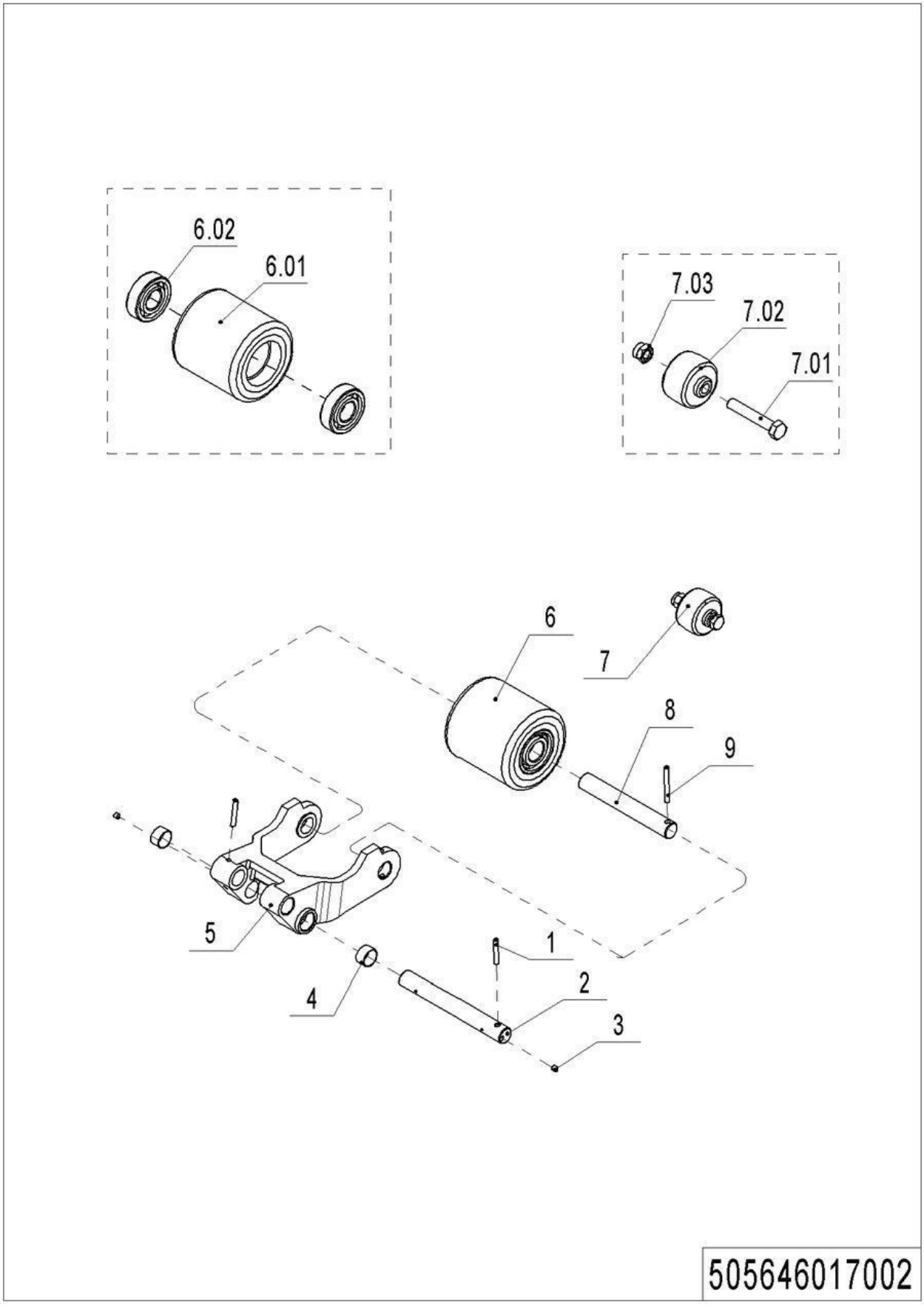

1= Supply as package. 2= Supply with constraints. 3= Phasing-out supply. 4= Supply as assembly. 5= Check other tables.

04 Load Wheel (Single) (505646017002)

No.	Item Code	Mark	Item Description	Qty.	Substitute	Note
1	910600400027	1	Spring Pin	4		
2	505638520038		Pin	2		
3	911200100001		Oil Cup	2		
4	940500100012		Bushing	4		
5	505638520036		Riser	2		**EU**
5	505638520065		Riser	2		**US**
6	505698510004		Wheel	2		
6.01	940300300006		WheelΦ82x110	2		
6.02	910700200019		Bearing	4		
7	502398510003		Pulley components	2		
7.01	910300500005		Nut	2		
7.02	505638520039		Running Pulley	2		
7.03	910100100035	1	Bolt	2		
8	505617020002		Axle	2		
9	910600400030	1	Spring Pin	4		

05 Caster (504446016501)

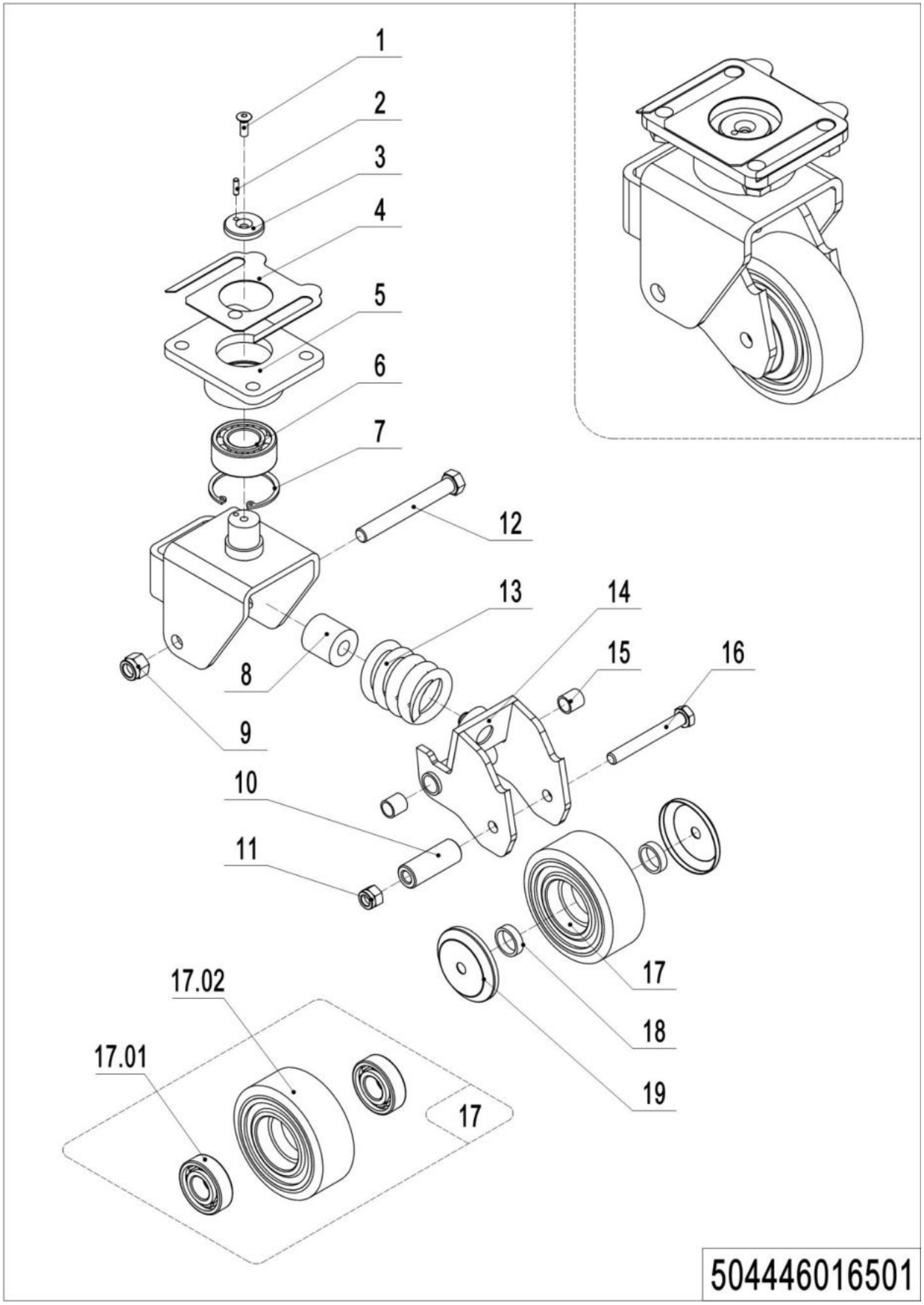

1= Supply as package. 2= Supply with constraints. 3= Phasing-out supply. 4= Supply as assembly. 5= Check other tables.

05 Caster (504446016501)

No.	Item Code	Mark	Item Description	Qty.	Substitute	Note
--	504416510001		Caster Assembly	1		
1	941100300001	1	Screw	1		
2	910600100004	1	Cylindrical Pin	1		
3	505616520007	1	Retaining Ring	1		
4	505616520014		Pad	1		
5	504416510002	2	Plate	1		
6	910700500002		Bearing	1		
7	910401400016	1	Circlip	1		
8	505616520000		Spring	1		
9	910300500006	1	Nut	1		
10	505616520013	1	Bushing	1		
11	910300500005	1	Nut	1		
12	941100200002	1	Bolt	1		
13	940400500006	1	Spring	1		
14	505616510003	2	Whirling Arm	1		
15	940500100002		Bushing	2		
16	910100100038	1	Bolt	1		
17	505698510000		Wheel	1		
17.01	910700200019		Bearing	2		
17.02	940300300018		WheelΦ100x40	1		
18	505616520012	1	Check Ring	2		
19	505616520011		Dust Cap	2		

Chapter 5: Electrical Parts

01 Display Assembly (504746010001)

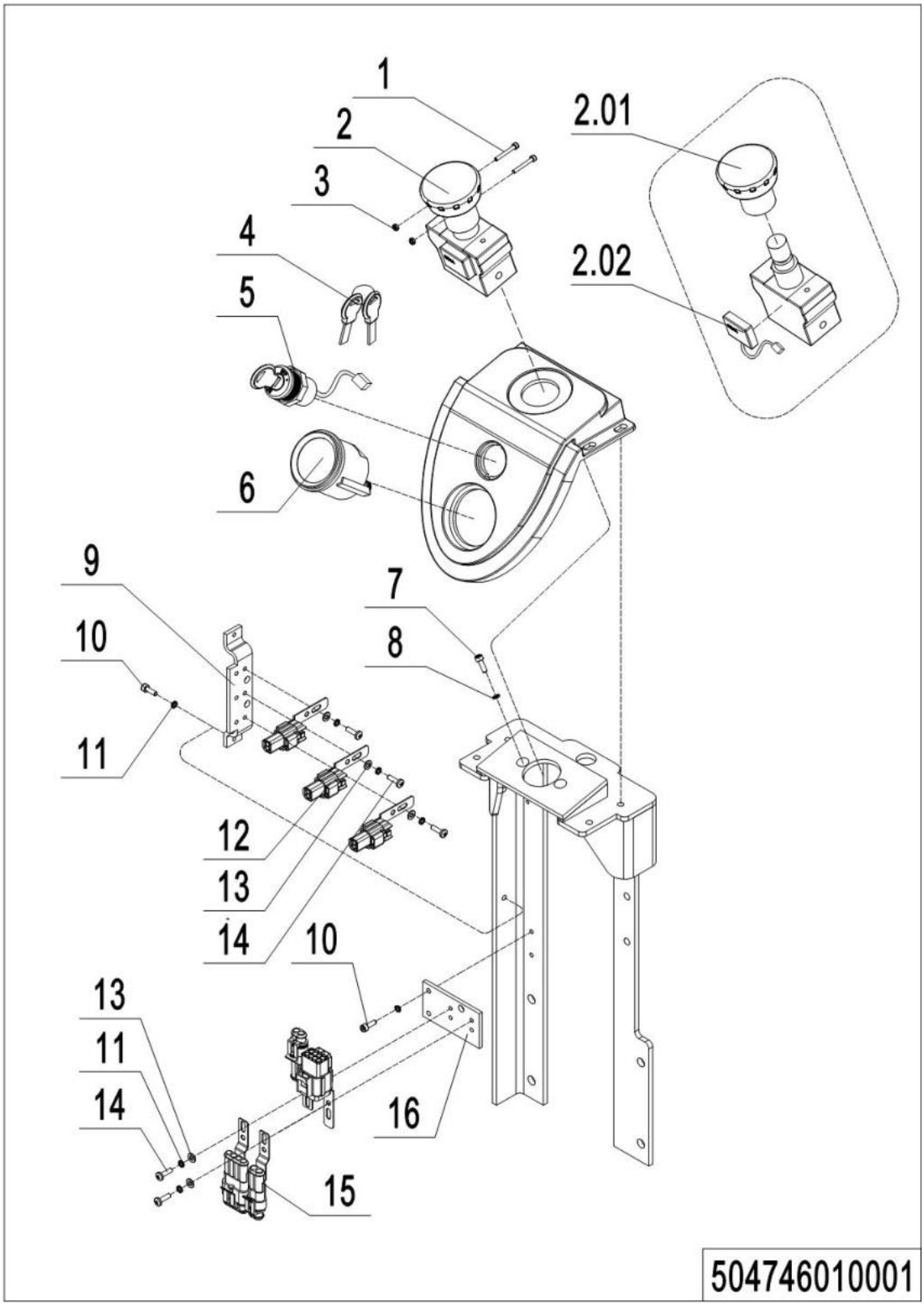

1= Supply as package. 2= Supply with constraints. 3= Phasing-out supply. 4= Supply as assembly. 5= Check other tables.

01 Display Assembly (504746010001)

No.	Item Code	Mark	Item Description	Qty.	Substitute	Note
1	910200500016		Screw	2		
2	920200100001		Emergency Button	1		
2.01	920200100008		Emergency Button	1		
2.02	505698520030		Proximity Switch	1		
3	910300100002		Nut	2		
4	920200200002		Key Switch	1		
5	920200200001		Key Switch	1		
6	921100100012		Display	1		
7	910200200023		Screw	2		
8	910400500004		Spring Washer	2		
9	504421520023		Bracket	1		
10	910200200014		Screw	4		
11	910400500003		Spring Washer	10		
12	921300300005		Holder	5		
13	910400100003		Flat Washer	3		
14	910200500022		Screw	6		
15	921300300010		Connector Holder	3		
16	504421520024		Plate	1		

02 Wire Harness (504746033001)

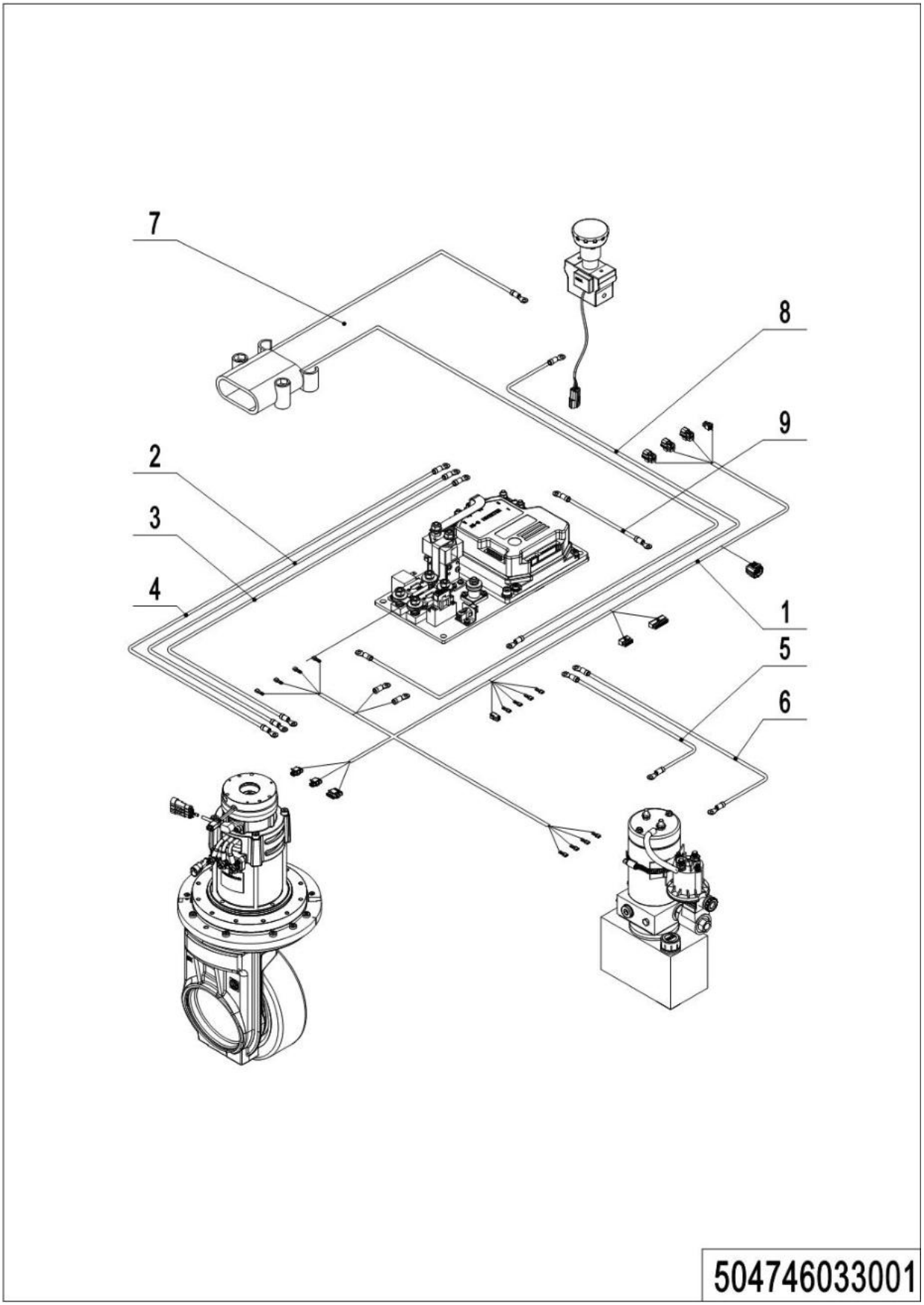

1= Supply as package. 2= Supply with constraints. 3= Phasing-out supply. 4= Supply as assembly. 5= Check other tables.

02 Wire Harness (504746033001)

No.	Item Code	Mark	Item Description	Qty.	Substitute	Note
1	505033010000		Wire Harness	1		
1	505033010005		Wire Harness	1		Li battery
2	504433010003		Cable	1		
3	504433010004		Cable	1		
4	504433010005		Cable	1		
5	505033010001		Cable	1		
6	505033010002		Cable	1		
7	505033010003		Wire Harness	1		
7	505033010006		Wire Harness	1		Li battery
8	505033010004		Cable	1		
9	504433010010		Cable	1		

03 Controller (504746033002)

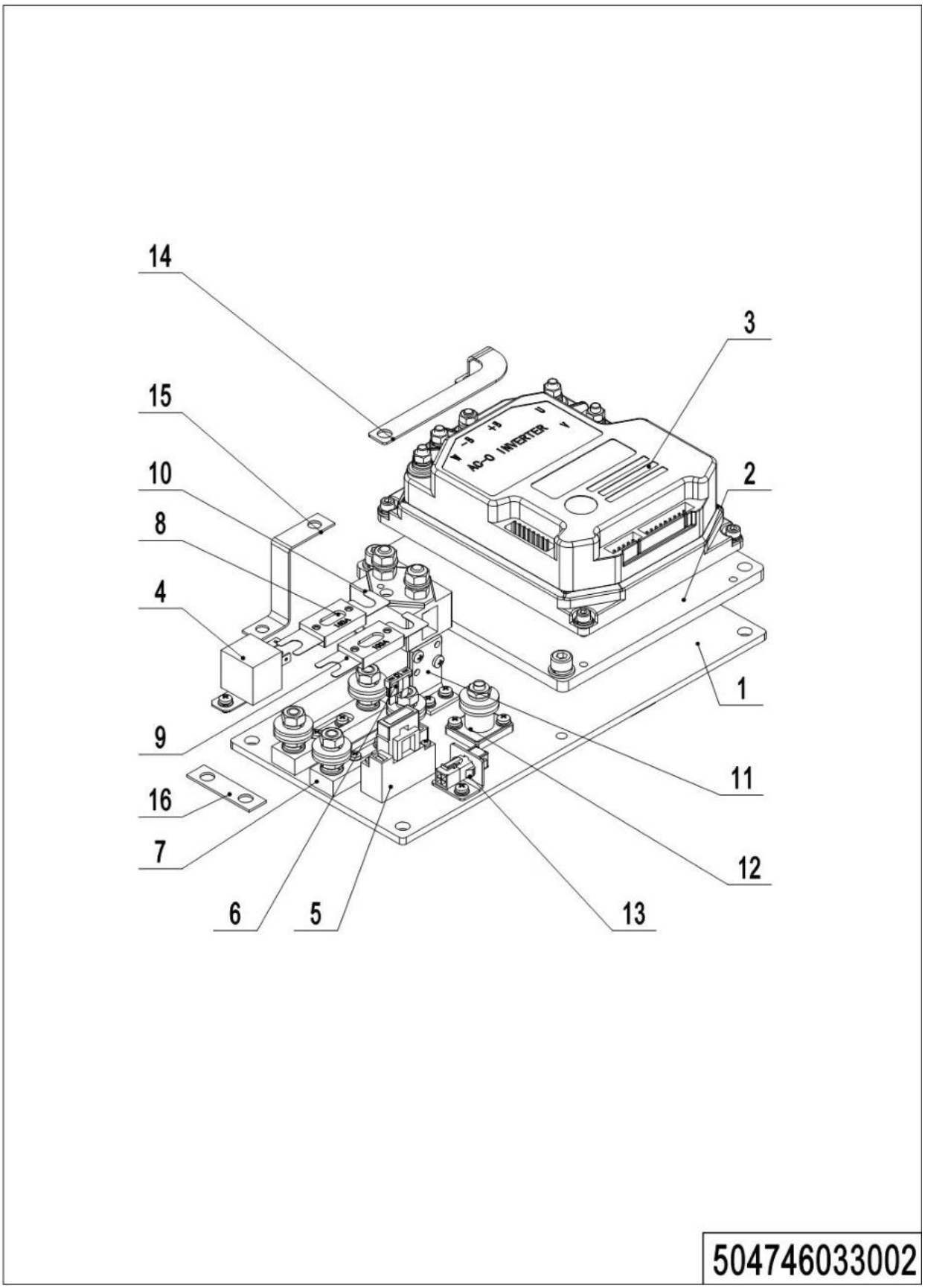

1= Supply as package. 2= Supply with constraints. 3= Phasing-out supply. 4= Supply as assembly. 5= Check other tables.

03 Controller (504746033002)

No.	Item Code	Mark	Item Description	Qty.	Substitute	Note
1	504421520025		Mounting Plate	1		
2	504433020000		Plate	1		
3	921400100025		Controller	1		
4	920800100001		Relay	1		
5	920100400006		Fuse Holder	1		
6	920100200002		Fuse	1		
7	920100400002		Fuse Holder	1		
8	920100100007		Fuse	1		
9	910400100004		Flat Washer	1		
10	920700100004		Contactor	1		
11	921300400001		Holder	1		
12	920100400001		Fuse Holder	1		
13	921300300001		Holder	1		
14	504433020001		Copper Busbar	1		
15	505633020002		Copper Busbar	1		
16	505633020003		Copper Busbar	1		

04 Charger (504746036501)

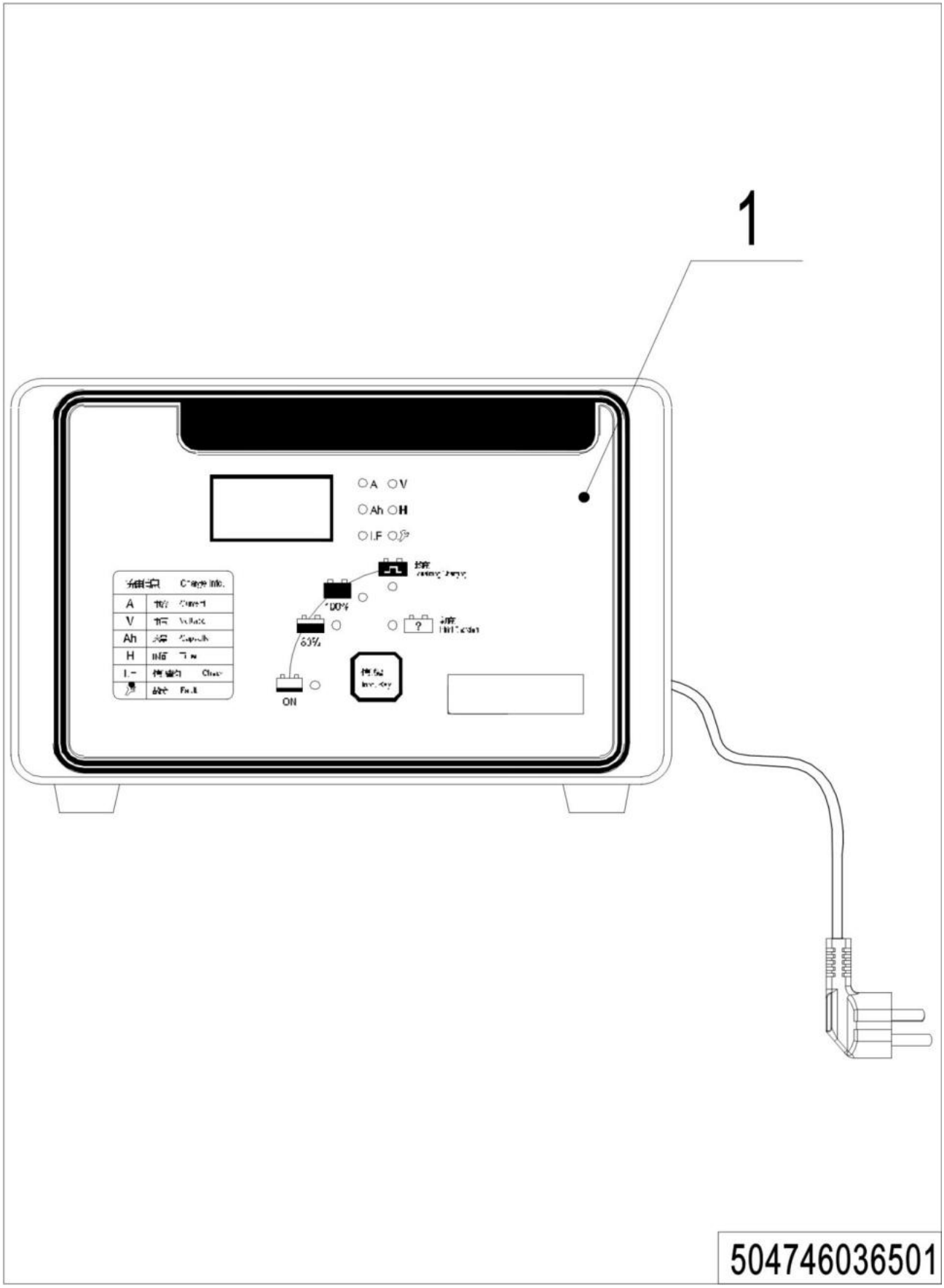

1= Supply as package. 2= Supply with constraints. 3= Phasing-out supply. 4= Supply as assembly. 5= Check other tables.

04 Charger (504746036501)

No.	Item Code	Mark	Item Description	Qty.	Substitute	Note
1	921000200001		Charger24V30A(Aisa-CHN)	1		SN
1	921000200002		Charger24V30A(Aisa-ENG)	1		SN
1	921000200003		Charger24V30A(EU)	1		SN
1	921000200004		Charger24V30A(AUS)	1		SN
1	921000200005		Charger24V30A(ENG)	1		SN
1	921000200006		Charger24V30A(USA)	1		SN
1	921000200151		Charger24V30A(Aisa-CHN)	1		NL
1	921000200152		Charger24V30A(EU)	1		NL
1	921000200153		Charger24V30A(Aisa-ENG)	1		NL
1	921000200154		Charger24V30A(ENG)	1		NL
1	921000200207		Charger 24V50A (Aisa-CHN)	1		SN
1	921000200208		Charger 24V50A (Aisa-ENG)	1		SN
1	921000200209		Charger 24V50A (EU)	1		SN
1	921000200211		Charger 24V50A (AUS)	1		SN
1	921000200210		Charger 24V50A (ENG)	1		SN
1	921000200212		Charger 24V50A (USA)	1		SN
1	921000200486		Charger 24V30A	1		SW
1	921000200450		Charger24V30A(ARG)	1		SN
1	921000200522		Charger24V60A(Asia-CHN)	1		安德普
1	921000200523		Charger24V60A(Asia-EN)	1		安德普
1	921000200524		Charger24V60A(EU)	1		安德普
1	921000200525		Charger24V60A(ENG)	1		安德普
1	921000200526		Charger24V60A(AUS)	1		安德普
1	921000200527		Charger24V60A((ISR)	1		安德普
1	921000200528		Charger24V60A(ARG)	1		安德普
1	921000200529		Charger24V60A(ZA)	1		安德普
1	921000200530		Charger24V60A(US)	1		安德普
1	921000200631		Charger24V60A(THA)	1		安德普
1	921000200531		Charger24V80A(Asia-CHN)	1		安德普
1	921000200532		Charger24V80A(Asia-EN)	1		安德普

04 Charger (504746036501) Continuation 1

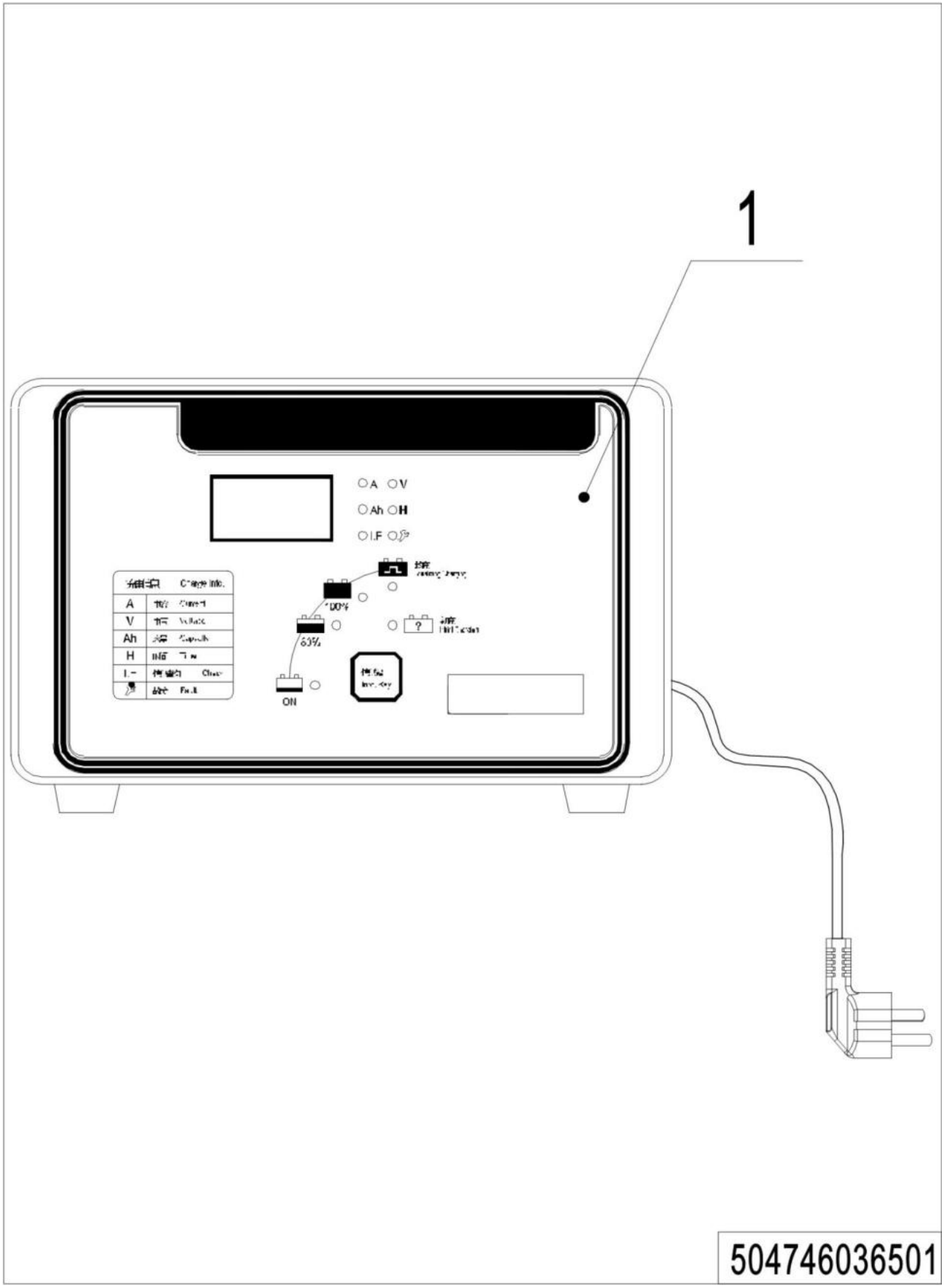

1= Supply as package. 2= Supply with constraints. 3= Phasing-out supply. 4= Supply as assembly. 5= Check other tables.

04 Charger (504746036501) Continuation 1

No.	Item Code	Mark	Item Description	Qty.	Substitute	Note
1	921000200533		Charger24V80A (EU)	1		安德普
1	921000200534		Charger24V80A (ENG)	1		安德普
1	921000200535		Charger24V80A (AUS)	1		安德普
1	921000200536		Charger24V80A (ISR)	1		安德普
1	921000200537		Charger24V80A (ARG)	1		安德普
1	921000200538		Charger24V80A (ZA)	1		安德普
1	921000200539		Charger24V80A (US)	1		安德普
1	921000200630		Charger24V80A (THA)	1		安德普
1	921000200494		Charger24V45A(EU)	1		施能

05 Battery (504746037001)

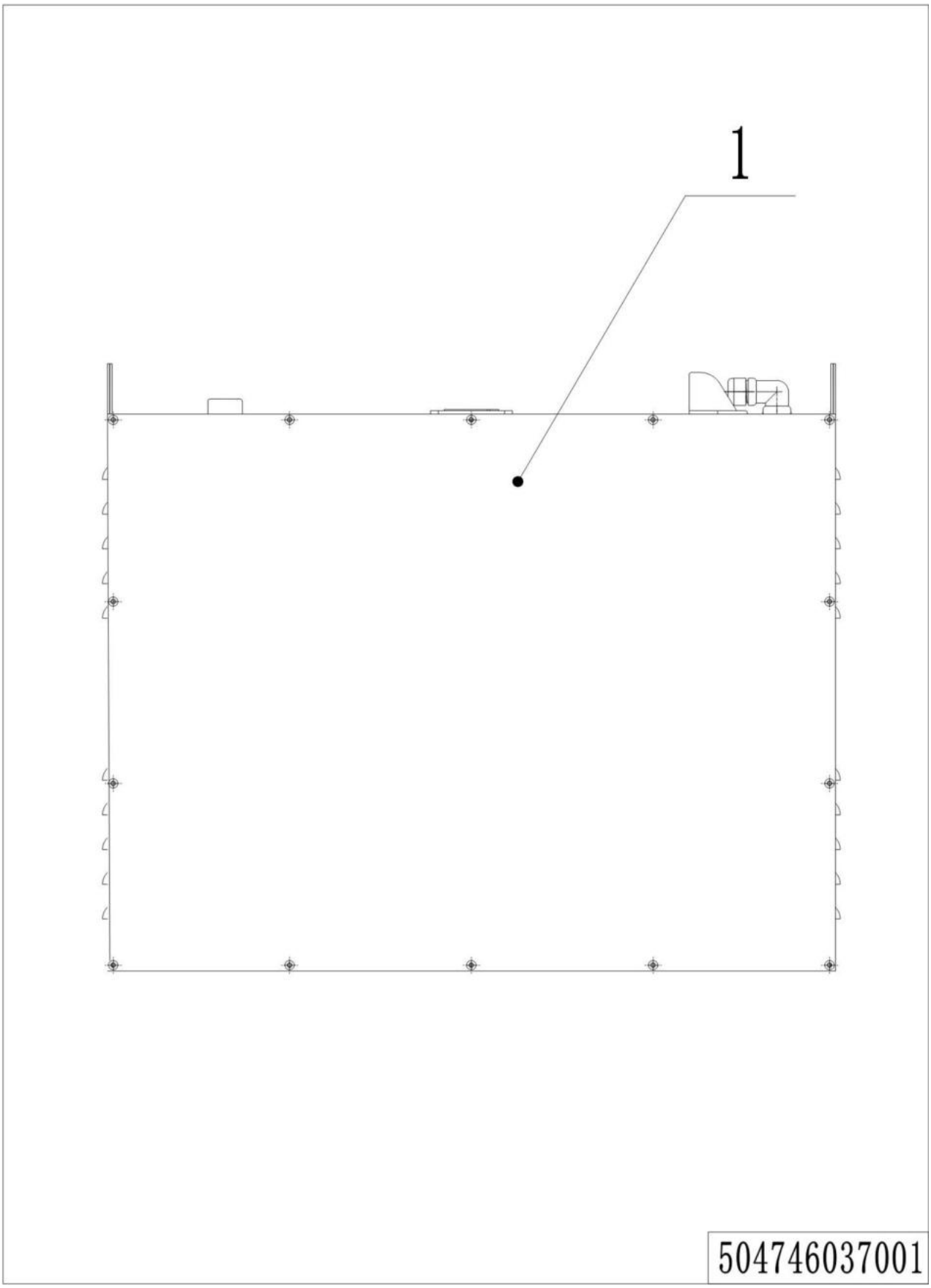

1= Supply as package. 2= Supply with constraints. 3= Phasing-out supply. 4= Supply as assembly. 5= Check other tables.

05 Battery (504746037001)

No.	Item Code	Mark	Item Description	Qty.	Substitute	Note
1	505637010000		Battery24V210Ah	1		
1	505637010001		Battery24V210Ah(welded)	1		
1	920600100018		Li Battery24V100Ah	1		
1	505637010007		Battery24V210Ah	1		
1	920600100042		Li Battery24V150Ah	1		
1	920600100019		Li Battery24V150Ah	1		
1	920600100053		Li Battery24V150Ah	1		
1	920600100073		Li Battery24V200Ah	1		
1	505637010006		Battery24V180Ah	1		
1	920600100143		Battery 24V200Ah	1		

Chapter 6: Special Parts

01 Load Backrest (505646040501)

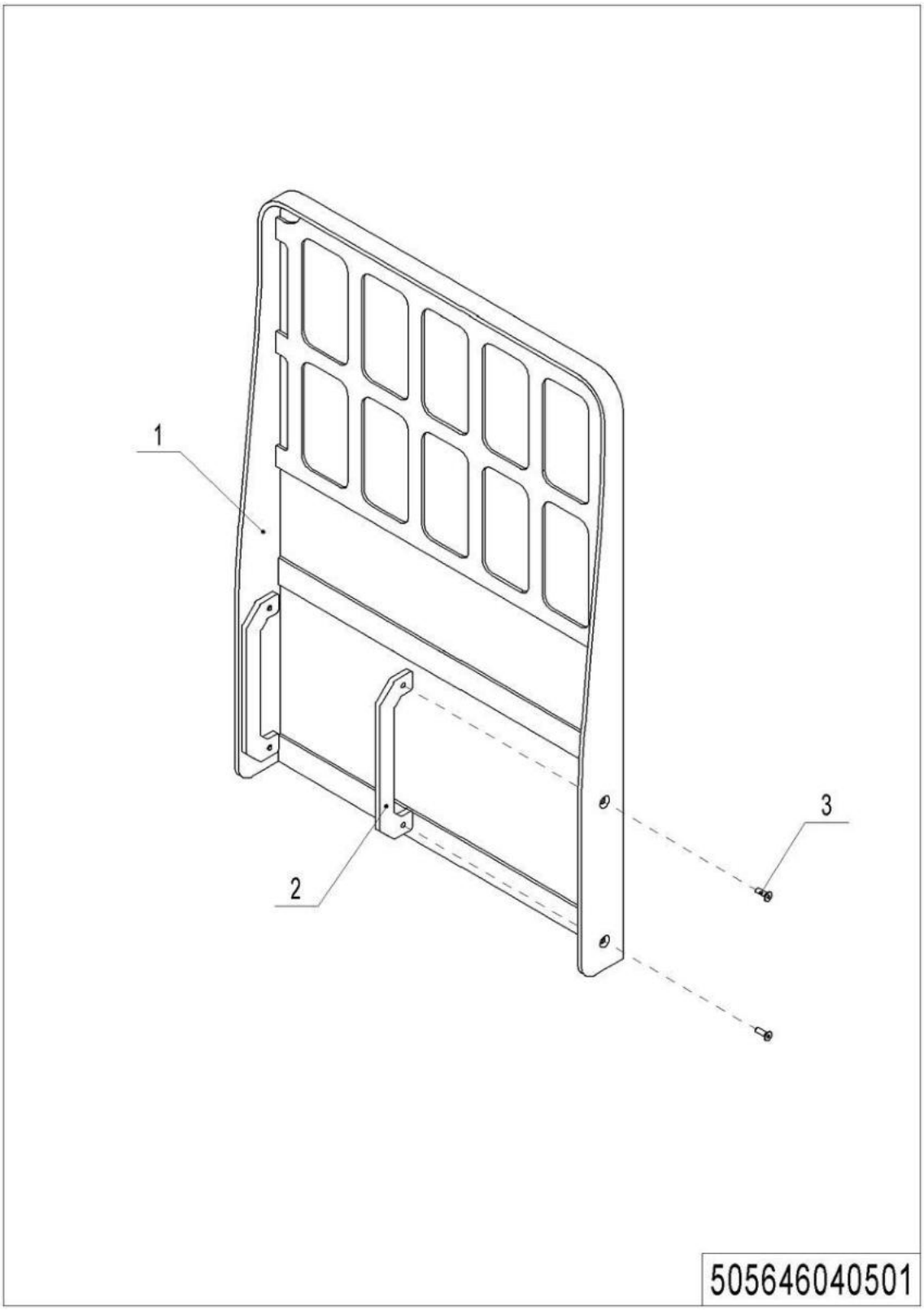

1= Supply as package. 2= Supply with constraints. 3= Phasing-out supply. 4= Supply as assembly. 5= Check other tables.

01 Load Backrest (506746040501)

No.	Item Code	Mark	Item Description	Qty.	Substitute	Note
1	505640510001		Load Backrest	1		
2	505640520004		Mounting Plate	2		
3	910200400036	1	Screw	4		

Chapter 7: Others

01 Labels and Decals (EU) (504746047001)

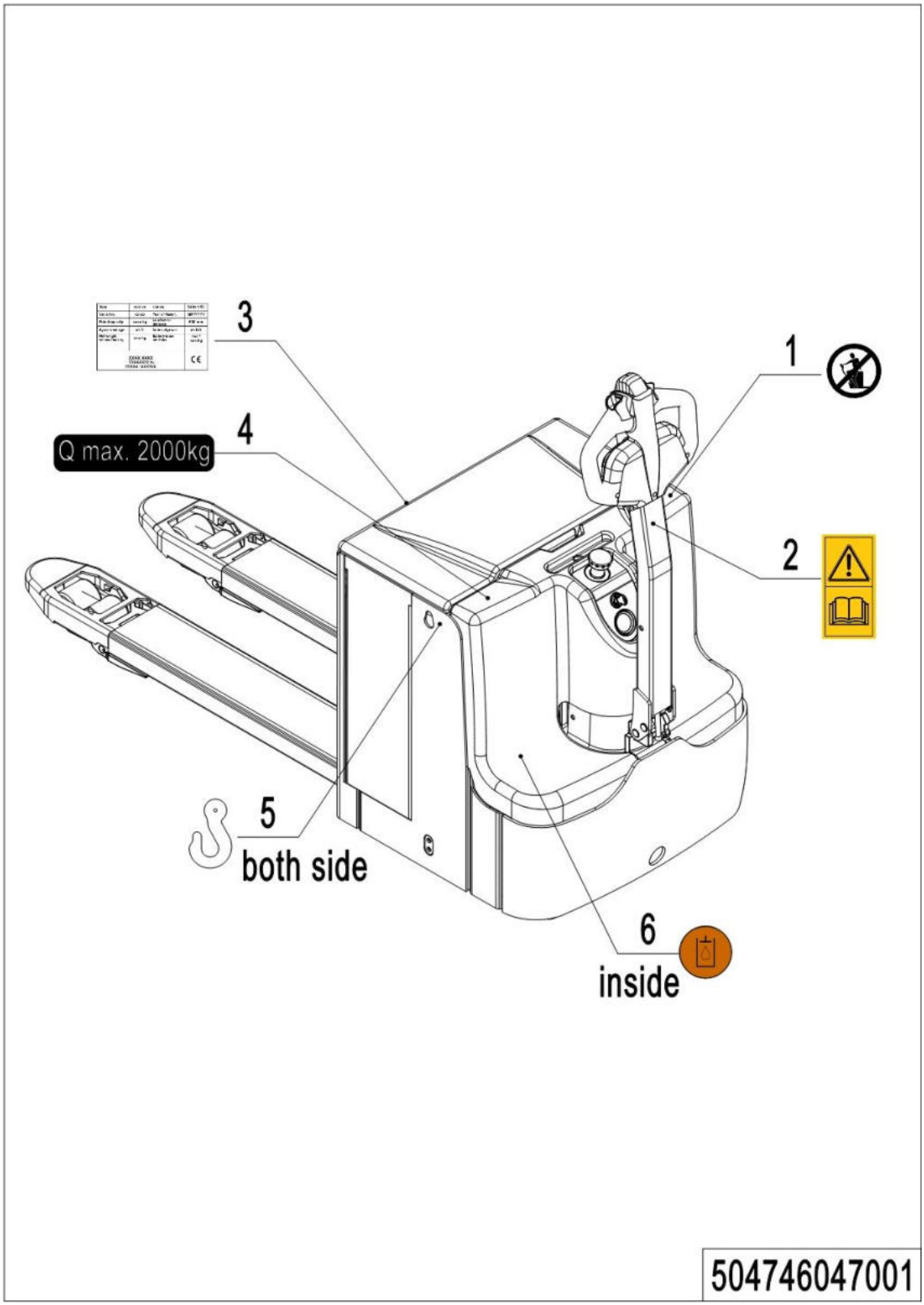

01 Labels and Decals (EU) (504746047001)

No.	Item Code	Mark	Item Description	Qty.	Substitute	Note
1	941200100003		Label	1		
2	941200300002		Label	1		
3	504747020002		Truck data plate	1		
4	941200200023		Label	1		
5	941200300001		Label	2		
6	941200300003		Label	1		

02 Labels and Decals (US) (504746047002)

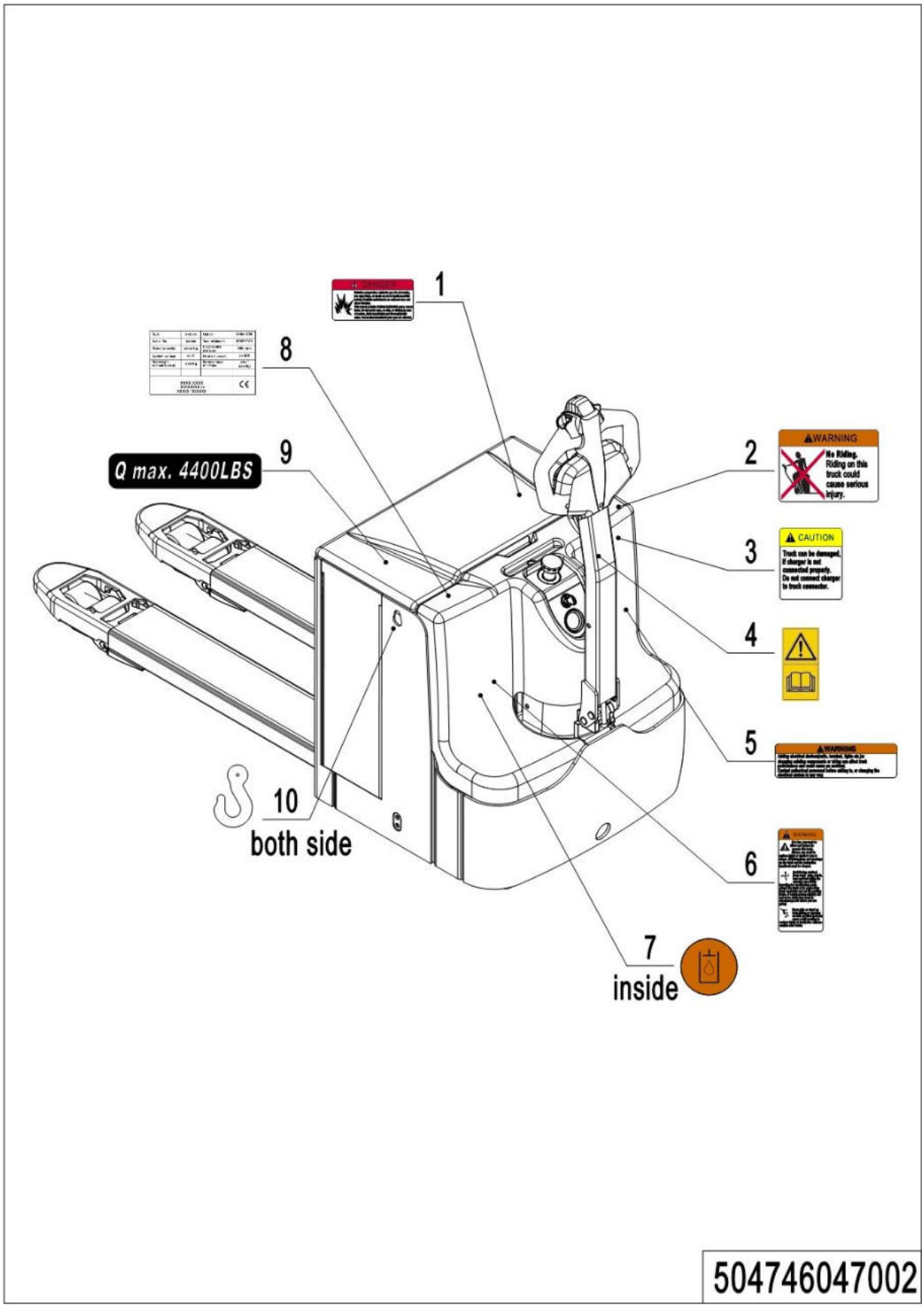

02 Labels and Decals (US) (504746047002)

No.	Item Code	Mark	Item Description	Qty.	Substitute	Note
1	941200100013		Label	1		
2	941200100011		Label	1		
3	941200100012		Label	1		
4	941200300002		Label	1		
5	941200100010		Label	1		
6	941200100009		Label	1		
7	941200300003		Label	1		
8	504747020003		Truck data plate	1		
9	941200200038		Label	1		
10	941200300001		Label	2		

Appendix

01 Electrical Circuit Diagram (504446045501)

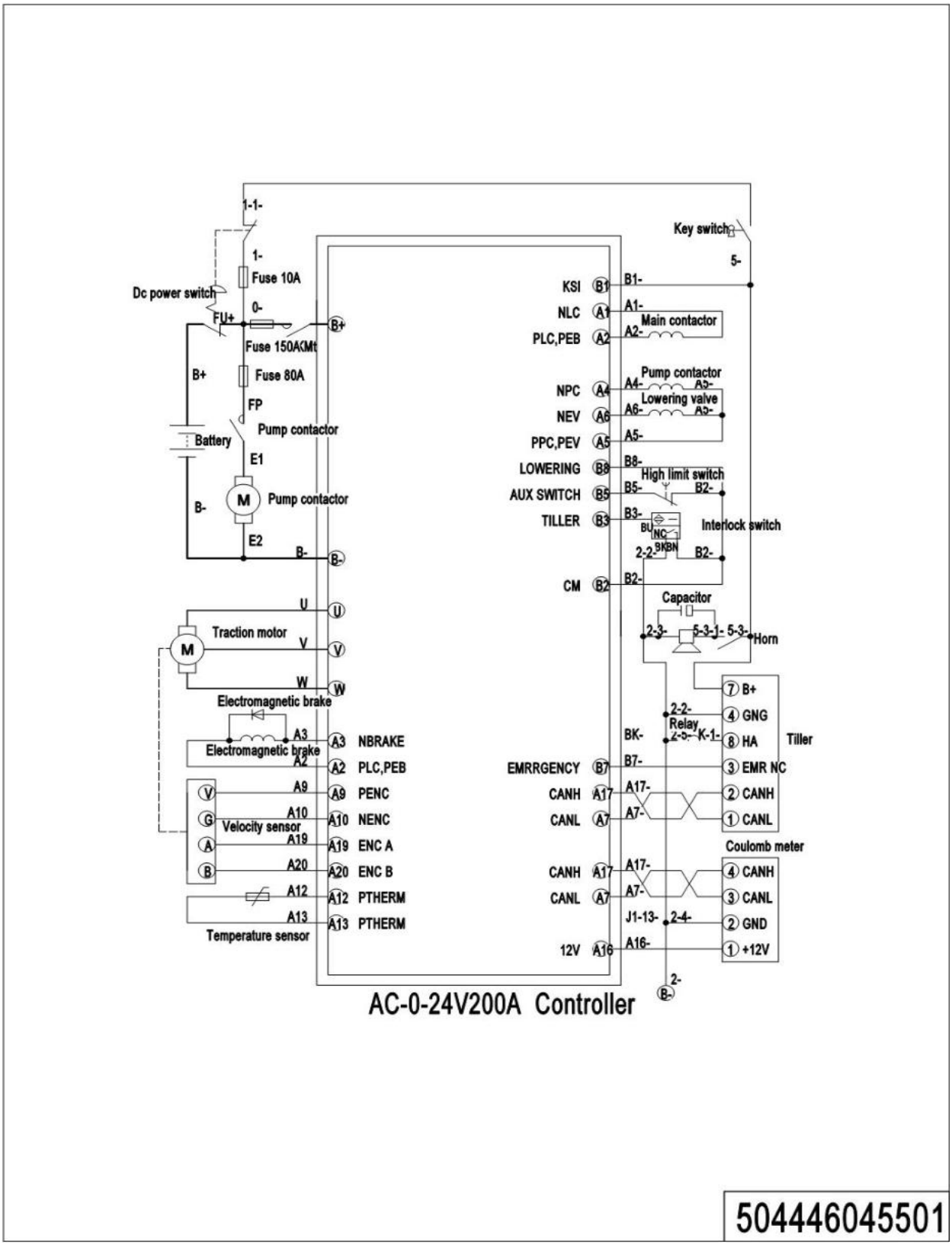

02 Hydraulic Circuit Diagram (504446045501)

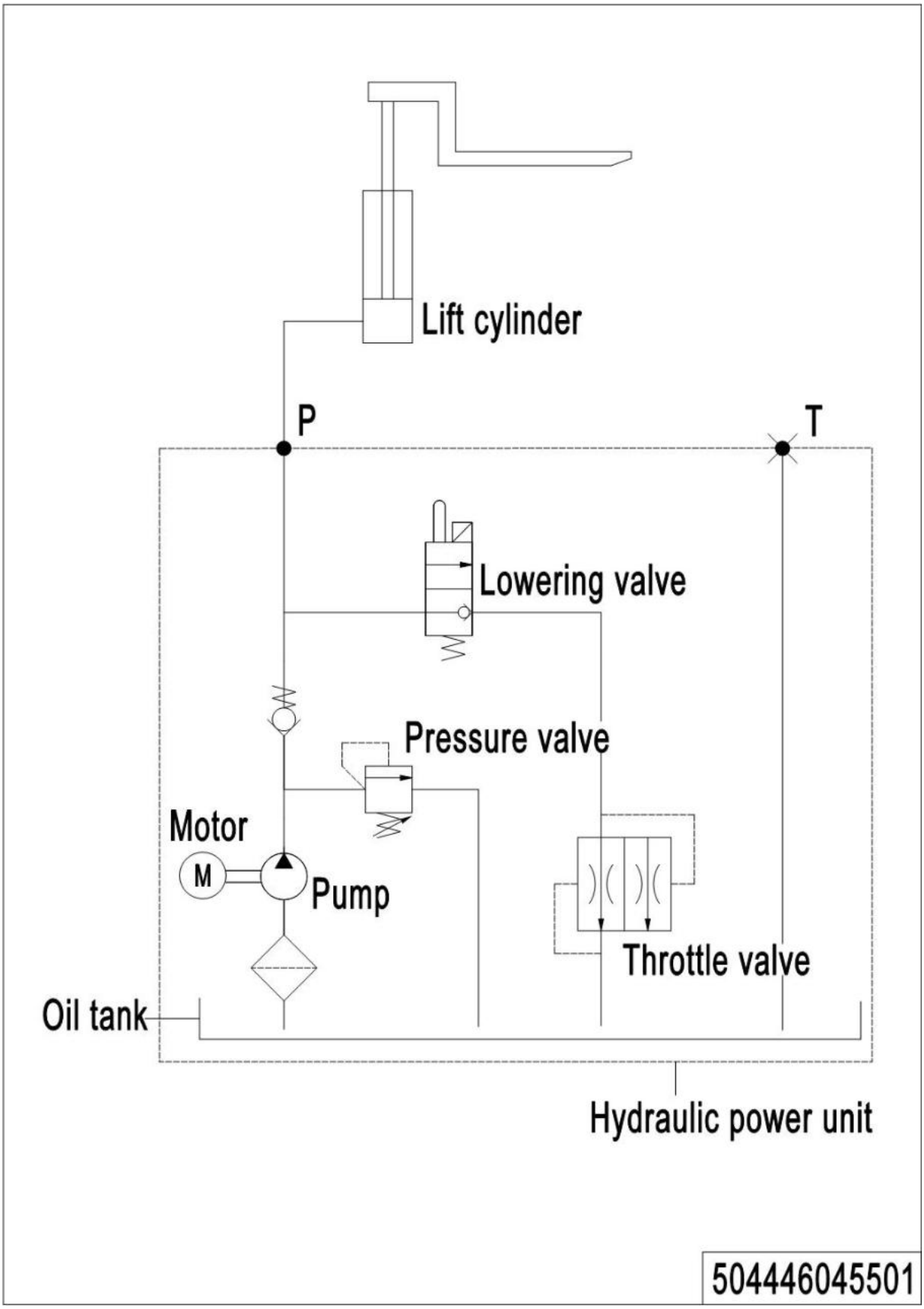

03 Consumable Parts List

No.	Item Code	Item Description	Qty.	Chapter/ Section/ Number
1	940500100019	Bushing	2	Chapter2/01/2 Chapter2/02/6
1	940500100019	Bushing		Chapter2/03/6
2	504498510000	Bushing	1	Chapter2/01/10.01
3	940500100027	Bushing	2	Chapter2/02/5 Chapter2/03/5
4	940500100032	Bushing	2	Chapter2/02/7 Chapter2/03/7
5	940500100012	Bushing	2	Chapter2/02/13.04 Chapter4/03/04
5	940500100012	Bushing		Chapter4/04/04
6	911200100001	Oil Cup	2	Chapter2/02/13.05 Chapter4/03/03
7	911200100001	Oil Cup		Chapter4/04/03
8	910700200017	Bearing	12	Chapter2/03/25.02
9	940500200003	Bushing	2	Chapter4/03/06
10	910700200019	Bearing	8	Chapter4/03/10.02 Chapter4/04/6.02
10	910700200019	Bearing		Chapter4/05/17.01
11	910700500002	Bearing	1	Chapter4/05/06
12	940500100002	Bushing	2	Chapter4/05/15
13	920100200002	Fuse	1	Chapter5/03/6
14	920100100007	Fuse	1	Chapter5/03/8

1= Supply as package. 2= Supply with constraints. 3= Phasing-out supply. 4= Supply as assembly. 5= Check other tables.